ENSTROM F-28F/280F SERIES MAINTENANCE MANUAL

RECORD OF REVISIONS

REV.	ISSUE DATE	DATE INSERTED	BY	REV.	ISSUE DATE	DATE INSERTED	BY
1	4/3/86	8/17/12	JW				
2	11/18/88	8/17/12	JW				
3	3/94	8/17/12	JW				
4	6/4/12	8/17/12	JW				
5	11/5/13	2/21/14	AD				
6	4/7/15	7/22/15	LN				
7	8/22/16	9/2/16	JW				
8	9/20/17	10/2/17	JW				
9	12/14/17	12/22/17	JW				
10	2/7/19	3/14/19	JW				
11	10/25/19	12/6/19	JW				
12	7/16/20	8/12/20	NP				
13	1/5/24	4/16/24	EK				
14	7/30/24	8/19/24	JW				
15	9/26/24	10/30/24	JW				

Maintain this record in the front of the manual.

UNCONTROLLED COPY WHEN DOWNLOADED OR PRINTED

Visit www.enstromhelicopter.com for instructions to order an original manual and to register for email notification of updates.

INTENTIONALLY LEFT BLANK

UNCONTROLLED COPY WHEN DOWNLOADED OR PRINTED

Visit www.enstromhelicopter.com for instructions to order an original manual and to register for email notification of updates.

ENSTROM
HELICOPTER CORPORATION

ENSTROM F-28F AND 280F SERIES MAINTENANCE MANUAL

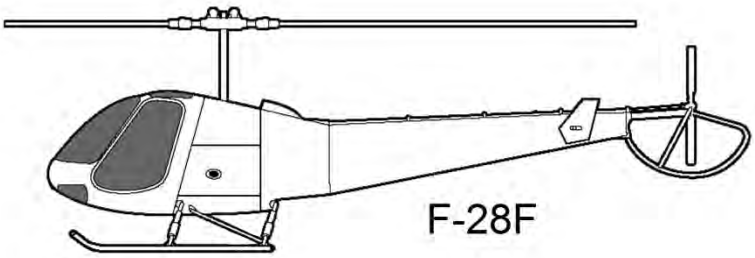

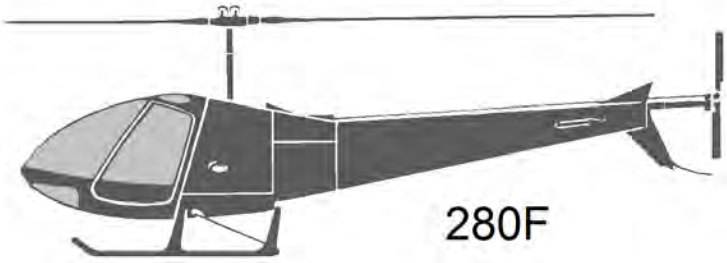

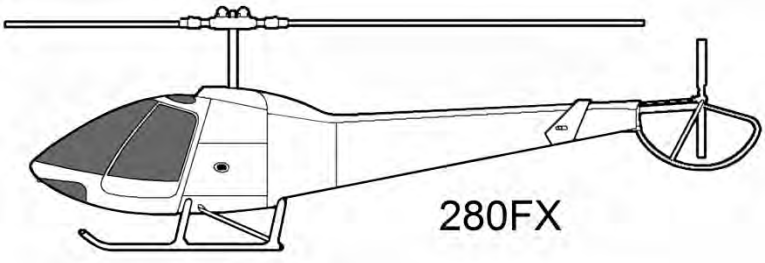

Copyright 1985-2024
The Enstrom Helicopter Corporation
2209 22nd Street
Menominee, Michigan 49858-3515

Telephone: 906-863-1200
Fax: 906-863-6821
www.enstromhelicopter.com

UNCONTROLLED COPY WHEN DOWNLOADED OR PRINTED

Visit www.enstromhelicopter.com for instructions to order an original manual and to register for email notification of updates.

INTENTIONALLY LEFT BLANK

UNCONTROLLED COPY WHEN DOWNLOADED OR PRINTED

Visit www.enstromhelicopter.com for instructions to order an original manual and to register for email notification of updates.

RECOMMENDED CHANGE REPORT

This maintenance manual is prepared and distributed by The Enstrom Helicopter Corporation and is intended for use by personnel responsible for maintaining Enstrom F-28F, 280F, and 280FX helicopters. This manual is periodically revised. If, in the opinion of the user, any information has been omitted or requires clarification, please direct your comments to Enstrom via this form (duplicate of this page), or via the Enstrom Helicopter website, or other similar form.

To submit comments online via the Enstrom Helicopter website, navigate to the *SUPPORT* drop-down menu at the top of the web page, select *MANUAL UPDATE REQUEST,* fill in the fields, and click *SUBMIT*.

If viewing this page online, access to the form is provided in the following link:

Manual Update Request - Enstrom Helicopter Corporation

Otherwise, if corresponding by postal mail, send the recommended changes to:

The Enstrom Helicopter Corporation
2209 22nd Street
Menominee, MI 49858-3515

ATTN: Technical Publications

Manual Identification: Enstrom F-28F/280F Series Maintenance Manual, dated 1985

Revision Number and Date: _____

Aircraft Model: _____

Recommended Change:

Visit www.enstromhelicopter.com for instructions to order an original manual and to register for email notification of updates.

TABLE OF CONTENTS

Section	Description	Page
	Cover	i
	Recommended Change Report	iii
	Table of Contents	iv
	Log of Pages and Revisions	v
Section 1	Introduction	MM-1-1
Section 2	General Information	MM-2-1
Section 3	Airworthiness Limitations	MM-3-1
Section 4	Servicing, Recommended Overhauls, Inspections, and General Maintenance	MM-4-1
Section 5	Weight and Balance	MM-5-1
Section 6	Electrical System	MM-6-1
Section 7	Instruments	MM-7-1
Section 8	Structures	MM-8-1
Section 9	Main Rotor	MM-9-1
Section 10	Tail Rotor	MM-10-1
Section 11	Drive Belt System	MM-11-1
Section 12	Flight Controls	MM-12-1
Section 13	Powerplant and Associated Systems	MM-13-1
Section 14	Utility Systems	MM-14-1
Section 15	Supplement Procedures	MM-15-1
Section 21	Supplement – Electrical Systems and Components	MM-21-1

UNCONTROLLED COPY WHEN DOWNLOADED OR PRINTED

Visit www.enstromhelicopter.com for instructions to order an original manual and to register for email notification of updates.

LOG OF PAGES AND REVISIONS

REV. NO	REV DATE	DESCRIPTION	DATE	FAA APPROVED
1	Apr 3/86	vi, vii, viii and ix MM-3-1 Added Sections 15 through 25 inclusively. Section 17 Supplemental Airworthiness Limitations	Apr 3/86	W. F. Horn ACE 115C
2	Nov 18/88	ix MM-2-10, 2-14 & 2-15 MM-3-13 & 3-20, 4-1 & 4-6 MM-6-1, 6-2, 6-5, 6-9, 6-21, 6-23, 6-24, 6-26, 6-28, 6-29 MM-9-14 & 9-47 MM-11-32 & 11-63 MM-12-43 MM-13-19, 13-22, 13-23, 13-94, 13-95, 13-96 MM-21-3, 21-4, 21-7, 21-10, 21-11, 21-12, 21-13	Nov 18/88	W. F. Horn ACE 115C
3	Mar 94	MM-4-1, MM-4-2	N/A	N/A
4	Jun 21/12	iii through xii MM-3-1 through MM-3-6 (MM-3-7 through MM-3-30 deleted) MM-4-1 through MM-4-76 MM-9-49 through MM-9-76 MM-10-1, 10-2, 10-13, 10-14, 10-14.1, 10-14.2, 10-15, 10-16 MM-17-1, 17-2 MM-21-1 through MM-21-30	N/A	G. Michalik ACE 116C
5	Nov 5/13	Cover i through xii MM-1-1 through MM-1-4 MM-2-1 through MM-2-20 MM-4-50, MM-4-55, MM-4-61 MM-4-62, MM-4-64, MM-4-67 MM-6-5, MM-6-6 MM-10-14.1 MM-11-21, MM-11-46 MM-13-33, MM-13-71 MM-13-101, MM-13-103, MM-13-105 MM-13-107, MM-13-108 MM-21-1, MM-21-8, MM-21-11 MM-21-14, MM-21-19 MM-21-21 through MM-21-30 MM-24-1 through MM-24-6	N/A	N/A

UNCONTROLLED COPY WHEN DOWNLOADED OR PRINTED

Visit www.enstromhelicopter.com for instructions to order an original manual and to register for email notification of updates.

REV. NO	REV DATE	DESCRIPTION	DATE	FAA APPROVED
6	Apr 7/15	Cover xi, xii MM-2-13 & 2-14 MM-2-16 through MM-2-19 MM-4-43, MM-4-45 through MM-4-48, MM-4-51, MM-4-63 MM-6-4, 6-5 & 6-6 MM-9-27, MM-9-29 MM-10-13 & 10-14, MM-10-14.2 MM-11-32, MM-11-52, MM-11-65 MM-13-11 & 13-12, MM-13-14, MM-13-16, MM-13-40, MM-13-48, MM-13-62, MM-13-77 & 13-78	N/A	N/A
7	Aug 22/16	Cover xii MM-1-3, MM-1-4 MM-2-11, MM-2-16 MM-3-2 through MM-3-4 MM-4-10 through MM-4-12, MM-4-27 MM-4-32, MM-4-41, MM-4-42, MM-4-57 MM-4-58, MM-4-59, MM-4-69 MM-8-27, MM-8-29, MM-8-30, MM-8-33 MM-8-34, MM-8-36 MM-9-1 through MM-9-30, MM-9-62, MM-9-64, MM-9-75 MM-10-14.1, MM-10-26 through MM-10-30 MM-10-41, MM-10-42, MM-10-45 MM-10-48 through MM-10-50 MM-11-25, MM-11-26 MM-13-14, MM-13-17, MM-13-19, MM-13-20, MM-13-22, MM-13-23, MM-13-33, MM-13-38 MM-13-40, MM-13-78, MM-13-79	N/A	N/A
8	Sep 20/17	Cover iii through ix, xii MM-1-1, MM-1-3, MM-1-4 through MM-1-6 MM-2-18, MM-2-20 MM-3-2, MM-3-3 MM-4-1, MM-4-29 through MM-4-34.2 MM-4-41, MM-4-44, MM-4-46, MM-4-51 MM-4-53 , MM-4-54, MM-4-59, MM-4-63 MM-4-65 MM-8-0 through MM-8-60 MM-13-11, MM-13-14, MM-13-17, MM-13-49 MM-13-50, MM-13-61, MM-13-62 MM-15-1, MM-15-2 (MM-15-A and MM-15-B removed) MM-16-1, MM-16-2 (MM-16-2 through MM-16-6 removed) MM-21-6, MM-21-8, MM-21-9, MM-21-10 MM-21-14, MM-21-21 through MM-21-32 MM-22-1, MM-22-2 (MM-22-2 through MM-22-14 removed)	N/A	N/A
9	Dec 14/17	xii, MM-4-31	N/A	N/A

UNCONTROLLED COPY WHEN DOWNLOADED OR PRINTED

Visit www.enstromhelicopter.com for instructions to order an original manual and to register for email notification of updates.

REV. NO	REV DATE	DESCRIPTION	DATE	FAA APPROVED
10	Feb 7/19	Cover ix, xiii, xiv MM-4-40, MM-4-42 MM-8-0 through MM-8-0.2 MM-8-12 through MM-8-16.2 MM-12-18 through MM-12-22 MM-21-1 through MM-21-4 MM-21-6 through MM-21-8, MM-21-14 MM-21-33 through MM-21-58 MM-24-7 through MM-24-8	N/A	N/A
11	Oct 25/19	Cover iv through vii, ix, xiii MM-1-3 MM-2-11, MM-2-12 MM-2-14 through MM-2-20 MM-4-3, MM-4-9, MM-4-11 MM-4-22, MM-4-32 MM-4-47, MM-4-51 through MM-4-56 MM-4-65, MM-4-66, MM-4-77, MM-4-78 MM-6-0.1, MM-6-0.2 MM-6-1 through MM-6-8 MM-8-36 MM-9-1 through MM-9-48 MM-10-1 through MM-10-68 MM-12-1 through MM-12-80 MM-13-0.1, MM-13-0.2, MM-13-31 MM-13-35, MM-13-37, MM-13-49 MM-13-67 through MM-13-71 MM-13-93 through MM-13-100 MM-21-15, MM-21-16 MM-24-0.1, MM-24-0.2 MM-24-8 through MM-24-10	N/A	N/A
12	Jul 16/2020	Cover vi, xiii, MM-1-1, MM-1-4, MM-1-5 MM-2-1, MM-2-12, MM-2-21, MM-2-22 MM-8-0, MM-8-0.2, MM-8-17, MM-8-18 MM-8-19, MM-8-20, MM-8-61, MM-8-62 MM-21-2 MM-23-1, MM-23-2	N/A	N/A
13	Jan 5/24	Cover i, vii, viii, ix, xiii MM-10-1 through MM-10-74 MM-11-1 through MM-11-84 MM-20-1 through MM-20-2 MM-25-1 through MM-25-2	N/A	N/A
14	Jul 30/24	vi through ix, xiii MM-8-1 through MM-8-76 MM-9-1 through MM-9-78 MM-12-1 through MM-12-86	N/A	N/A

UNCONTROLLED COPY WHEN DOWNLOADED OR PRINTED

Visit www.enstromhelicopter.com for instructions to order an original manual and to register for email notification of updates.

REV. NO	REV DATE	DESCRIPTION	DATE	FAA APPROVED
15	Sep 26/24	Cover i through viii MM-1-1 through MM-1-8 MM-2-1 through MM-2-26 MM-3-1 through MM-3-6 MM-4-1 through MM-4-84 MM-5-1 through MM-5-20 MM-6-1 through MM-6-30 MM-7-1 through MM-7-28 MM-8-34 MM-9-69 through MM-9-71, MM-9-81 MM-10-63, MM-10-64 MM-11-72, MM-11-76 MM-13-1 through MM-13-134 MM-14-1 through MM-14-6 MM-15-1 through MM-15-2 MM-21-0.1, MM-21-0.2, MM-21-1, MM-21-4	Oct 28/2024	B. Diakhite AIR-765

UNCONTROLLED COPY WHEN DOWNLOADED OR PRINTED

Visit www.enstromhelicopter.com for instructions to order an original manual and to register for email notification of updates.

SECTION 1

INTRODUCTION

TABLE OF CONTENTS

Paragraph		Page
1-1	**Manual Arrangement**	**MM-1-3**
1-2	**Aircraft Effectivity**	**MM-1-3**
1-3	**Maintenance Manual Supplements**	**MM-1-3**
1-4	**Maintenance Manual Changes and Revisions**	**MM-1-3**
1-5	**Application of Warnings, Cautions, and Notes**	**MM-1-5**
1-6	**Definitions and Abbreviations**	**MM-1-5**

UNCONTROLLED COPY WHEN DOWNLOADED OR PRINTED

Visit www.enstromhelicopter.com for instructions to order an original manual and to register for email notification of updates.

SECTION 1

INTRODUCTION

TABLE OF CONTENTS

Paragraph	Description	Page

INTENTIONALLY LEFT BLANK

UNCONTROLLED COPY WHEN DOWNLOADED OR PRINTED

Visit www.enstromhelicopter.com for instructions to order an original manual and to register for email notification of updates.

SECTION 1

INTRODUCTION

1-1 MAINTENANCE MANUAL ARRANGEMENT

The maintenance manual sections divide the aircraft into major systems and related subsystems to provide maintenance procedures required for proper system function and optimum component service life. Each section details the following maintenance functions for the associated subsystems and components, if applicable:

General Description
Troubleshooting
Adjustment/Rigging
Removal
Disassembly
Inspections (other than Periodic Inspections)
Repair
Assembly
Installation

1-2 AIRCRAFT EFFECTIVITY

The maintenance data presented in this manual is applicable to all F-28F, 280F, and 280FX model Enstrom helicopters with standard equipment. Optional equipment maintenance procedures are included in the F-28F/280F Series Maintenance Manual for common optional equipment that is installed before aircraft delivery (This does not include avionics installations).

1-3 MAINTENANCE MANUAL SUPPLEMENTS

Maintenance procedures for optional equipment may be provided in maintenance manual supplements. These supplements are part of the F-28F/280F Series Maintenance Manual when an aircraft is equipped with optional equipment which requires a maintenance manual supplement. The following optional equipment supplements are applicable to the F-28F/280F Series Maintenance Manual.

Supplement 1: Avionic Systems, Revision 9, Dated: Apr 30/20.

1-4 MAINTENANCE MANUAL CHANGES AND REVISIONS

Subsequent to the publication of the initial issue of the Enstrom F-28F/280F Series Maintenance Manual, changes in aircraft equipment, support concepts and procedures, as well as information developed by experience, may affect the contents of the manual. To ensure that coverage in the manual continues to reflect such changes, revised information is released by one of the following methods:

(1) Revision - A revision alters portions of the manual by replacement, addition, and/or deletion of pages. A revision cover page lists the page(s) to be removed and/or inserted.

(2) Reissue - Where large numbers of changes are involved, a complete reissue of the manual is warranted. Preceding issues of the manual then become obsolete and should be discarded.

UNCONTROLLED COPY WHEN DOWNLOADED OR PRINTED

Visit www.enstromhelicopter.com for instructions to order an original manual and to register for email notification of updates.

(3) Service Directive Bulletins - Used to direct the owner/operator and/or maintenance personnel to make mandatory changes, improvements, or inspections to the aircraft applicable to the entire fleet or a segment of the fleet that are typically safety/airworthiness related. The information provided in the Service Directive Bulletins will be incorporated in the maintenance manual as needed at a later date. At the time of incorporation, the Service Directive Bulletin is superseded by the maintenance manual, and accomplishment or sign-off of the Service Directive Bulletin in the maintenance records book is no longer required. A detailed entry should be made in the maintenance records to indicate that the Service Directive Bulletin is superseded by the maintenance manual.

(4) Service Information Letters - Used to transmit information, recommendations, and general service instructions to the aircraft owner/operator and/or maintenance personnel applicable to the entire fleet or a segment of the fleet. The information provided in the Service Information Letters will be incorporated into the maintenance manual as needed at a later date.

(5) Service Instructions – Used to provide the owner/operator and/or maintenance personnel with information that is applicable to specific aircraft and does not meet the criteria of a Service Information Letter or Service Directive Bulletin. Service Instructions will not be distributed to the entire fleet.

Enstrom distributes maintenance manual revisions and reissues in electronic form via the Enstrom Helicopter website: www.enstromhelicopter.com (follow the applicable link under the Technical Publications section of the Technical Support page). Revision update notices are sent via email to owners and operators who are registered with Enstrom. Registration to receive publication mailing notifications can be coordinated through the Enstrom Technical Publications Administrator. A complete manual hardcopy may be ordered through Enstrom Customer Service.

Service Information Letters and Service Directive Bulletins incorporated into the maintenance manual are logged in the Service Information Letter Index or the Service Directive Bulletin Index (as appropriate) located on the Enstrom Helicopter website: www.enstromhelicopter.com (follow the applicable link under the Technical Publications section of the Technical Support page). Each index numerically lists all Service Information Letters and Service Directive Bulletins, respectively, and identifies those which have been incorporated into the maintenance manual. All Service Information Letters and Service Directive Bulletins are also located under the Technical Publications section of the website.

Notice of recently released Service Information Letters and Service Directive Bulletins is provided via email notification. Registration to receive publication mailing notifications can be coordinated through the Enstrom Technical Publications Administrator.

UNCONTROLLED COPY WHEN DOWNLOADED OR PRINTED

Visit www.enstromhelicopter.com for instructions to order an original manual and to register for email notification of updates.

1-5 APPLICATION OF WARNINGS, CAUTIONS, AND NOTES

Warnings, Cautions, and Notes emphasize important and critical instructions and are used for the following conditions.

WARNING: CALLS ATTENTION TO USE OF MATERIALS, PROCESSES, METHODS, OR PROCEDURES THAT MUST BE FOLLOWED TO AVOID PERSONAL INJURY OR LOSS OF LIFE.

CAUTION: CALLS ATTENTION TO METHODS AND PROCEDURES WHICH MUST BE FOLLOWED TO AVOID DAMAGE TO THE AIRCRAFT OR EQUIPMENT.

NOTE: Calls attention to information essential to highlight for clarification of procedures.

1-6 DEFINITIONS AND ABBREVIATIONS

Table 1-1. List of Definitions

Airframe	Means the fuselage, stabilizers, tailcone, cowlings, fairings, rotors, and landing gear of the helicopter and their accessories and controls.
Annually	With respect to an annual inspection, annually means within the preceding 12 calendar months.
Approved	Unless used with reference to another person, means approved by the FAA or any person to whom the FAA has delegated its authority in the matter concerned, or approved under the provisions of a bilateral agreement between the United States and a foreign country or jurisdiction.
Empty Weight	Standard empty weight of a standard helicopter including unusable fuel, full operating fluids, and full engine oil. Basic empty weight is standard empty weight plus weight of installed optional equipment.
FAR	Means the Federal Aviation Regulations (FARs) prescribed by the Federal Aviation Administration (FAA). The FARs comprise Title 14 of the Code of Federal Regulations (14 CFR).
Life-Limited Component	Any part for which a mandatory replacement limit is specified in the type design, the Instructions for Continued Airworthiness, or the maintenance manual. (Refer to Section 3, *Airworthiness Limitations*, Table 3-1.)

UNCONTROLLED COPY WHEN DOWNLOADED OR PRINTED

Visit www.enstromhelicopter.com for instructions to order an original manual and to register for email notification of updates.

Table 1-2. List of Abbreviations

A/R	As Required
AC	Advisory Circular
AGL	Above Ground Level
ALT	Altitude
APU	Auxiliary Power Unit
ASTM	American Society for Testing and Materials
B.L.	Butt Line
C	Celsius
CAS	Calibrated Airspeed
cc	Cubic centimeter
CCW	Counterclockwise
CFR	Code of Federal Regulations
CHT	Cylinder Head Temperature
C.G.	Center of Gravity
C.L.	Center Line
cm	Centimeter
CPC	Corrosion Prevention Compound
COM	Communication
°	Degree
EA	Each
EASA	European Union Aviation Safety Agency
EGT	Exhaust Gas Temperature
EMI	Electromagnetic Interference
F	Fahrenheit
FAA	Federal Aviation Administration
FAR	Federal Aviation Regulations
Fig.	Figure
FIM	Full Indicator Movement
FLT	Flight
FPM	Feet per Minute
ft	Foot/Feet
ft²	Cubic Feet
ft-lb or *ft-lbs*	Foot-Pound (Force)
ft/min	Feet per Minute
FWD	Forward
g	Gram
gal	Gallon
gal/hr	Gallon per Hour

UNCONTROLLED COPY WHEN DOWNLOADED OR PRINTED

Visit www.enstromhelicopter.com for instructions to order an original manual and to register for email notification of updates.

Table 1-2. List of Abbreviations - Continued

GW	Gross Weight
h or hr(s)	Hour(s)
hp	Horsepower
Hz	Hertz (Cycles per Second)
I/A/W or *IAW*	In Accordance With
IAS	Indicated Airspeed
IPC	Illustrated Parts Catalog
I.D.	Inner Diameter
in or ”	Inch
in-lb or *in-lbs*	Inch-Pound (Force)
in Hg	Inches of Mercury
IVSI	Instantaneous Vertical Speed Indicator
kg	Kilogram
km	Kilometer
kW	Kilowatt
l or L	Liter
LH	Left Hand
lb	Pound
lb/hr	Pound per Hour
LED	Light Emitting Diode
m	Meter
m^2	Cubic Meter
MAX	Maximum
MB	Millibars
ml or *mL*	Milliliter
MIN	Minimum
MIN	Minute
MM	Maintenance Manual
mm	Millimeter
mv	Millivolt
NO.	Number
NM	Nautical Mile
Nm	Newton Meter
OAT	Outside Air Temperature
O.D.	Outer Diameter
ORC	Overrunning Clutch
oz	Ounce
P/N	Part Number

UNCONTROLLED COPY WHEN DOWNLOADED OR PRINTED

Visit www.enstromhelicopter.com for instructions to order an original manual and to register for email notification of updates.

Table 1-2. List of Abbreviations - Continued

Para.	Paragraph
pt	Pint
PTO	Power Take-Off
PRESS	Pressure
psi	Pounds per Square Inch
psig	Pounds per Square Inch Gauge
R/S	Right Side
Ref.	Reference
Rev.	Revision
RFI	Radio Frequency Interference
RFM	Rotorcraft Flight Manual
RH	Right Hand
RPM	Revolutions per Minute
S/N	Serial Number
SDB	Service Directive Bulletin
SIL	Service Information Letter
STA	Station
sq ft	Square Feet
STC	Supplemental Type Certificate
TEMP	Temperature
TIT	Turbine Inlet Temperature
TIS	Time In Service
TT or *T-T*	Tension-Torsion
VDC	Volts, Direct Current
V_H	Velocity Maximum Speed (Level Flying Condition under Maximum Power)
V_{NE}	Velocity Never Exceed (Airspeed Limitation)
W	Watt
WT	Weight
XMSN	Transmission

UNCONTROLLED COPY WHEN DOWNLOADED OR PRINTED

Visit www.enstromhelicopter.com for instructions to order an original manual and to register for email notification of updates.

SECTION 2

GENERAL INFORMATION

TABLE OF CONTENTS

Paragraph		Page
2-1	General Description	MM-2-3
2-2	General Arrangement	MM-2-3
2-3	Principal Dimensions	MM-2-3
2-4	Airframe	MM-2-3
2-5	Landing Gear	MM-2-9
2-6	Engine	MM-2-9
2-7	Engine Cooling	MM-2-9
2-8	Flight Controls	MM-2-9
2-9	Power Train	MM-2-10
2-10	Main Rotor Assembly	MM-2-10
2-11	Tail Rotor Assembly	MM-2-10
2-12	Operating Limitations and Restrictions	MM-2-10
2-13	Placards	MM-2-10
2-14	Vendor Manuals	MM-2-11
2-15	Special Tools	MM-2-13
2-16	Torque Data	MM-2-16
2-17	Consumable Parts List	MM-2-24
2-18	Taper Pin Size Chart	MM-2-25

UNCONTROLLED COPY WHEN DOWNLOADED OR PRINTED

Visit www.enstromhelicopter.com for instructions to order an original manual and to register for email notification of updates.

INTENTIONALLY LEFT BLANK

UNCONTROLLED COPY WHEN DOWNLOADED OR PRINTED

Visit www.enstromhelicopter.com for instructions to order an original manual and to register for email notification of updates.

2-1 GENERAL DESCRIPTION

The F-28F, 280F, and 280FX helicopters are a 3 bladed, single engine helicopter manufactured by the Enstrom Helicopter Corporation and certificated by the FAA under CAR 6. Additionally, the F-28F, 280F, and 280FX models have demonstrated compliance with 14 CFR 36, amendment 20 (Appendix J), effective September 11, 1992.

The F-28F, 280F, and 280FX models are powered by a turbocharged, fuel injected Textron-Lycoming piston engine. The turbocharger system is equipped with a variable waste gate assembly, and the throttle is equipped with a correlator.

2-2 PRINCIPAL DIMENSIONS

Figure 2-1 depicts the general arrangement.

2-3 PRINCIPAL SPECIFICATIONS

Table 2-1 lists the principal specifications of the different model aircraft.

2-4 AIRFRAME

The airframe is comprised of three sections: cabin assembly, pylon assembly, and tail cone assembly.

A. Cabin Assembly: The cabin assembly is fabricated from molded fiberglass and is an integral unit. It is attached to the pylon by six bolts and contains the aluminum seat structure, plus the instrument panel, cyclic, collective, and tail rotor controls. The windshield and upper and lower windows provide excellent visibility. The swing-open style doors provide access to the cabin.

B. Pylon Assembly: The pylon assembly is fabricated from steel tubing, houses the engine, and supports the landing gear, cabin, main transmission, and tail cone.

C. Tail Cone Assembly: The tail cone assembly is a semi-monocoque type and attaches to the pylon assembly with three bolts for easy removal and installation. The tail cone supports the horizontal stabilizers, tail rotor driveshaft, tail rotor gearbox, tail rotor, and tail rotor guard.

UNCONTROLLED COPY WHEN DOWNLOADED OR PRINTED

Visit www.enstromhelicopter.com for instructions to order an original manual and to register for email notification of updates.

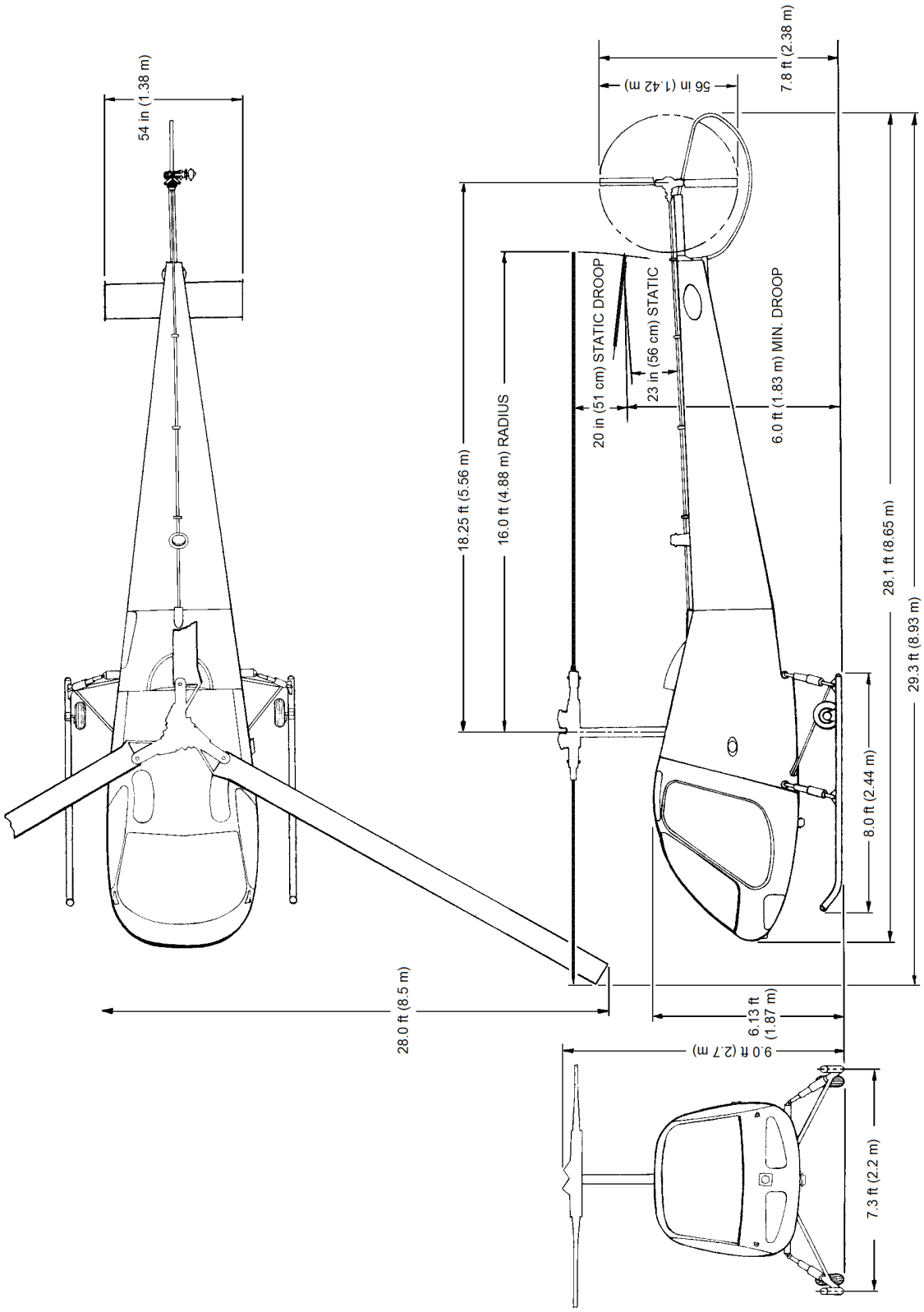

Sheet 1 of 4

Figure 2-1. Principal Dimensions - F-28F Pre-1986 (S/N 743 and Prior)

UNCONTROLLED COPY WHEN DOWNLOADED OR PRINTED

Visit www.enstromhelicopter.com for instructions to order an original manual and to register for email notification of updates.

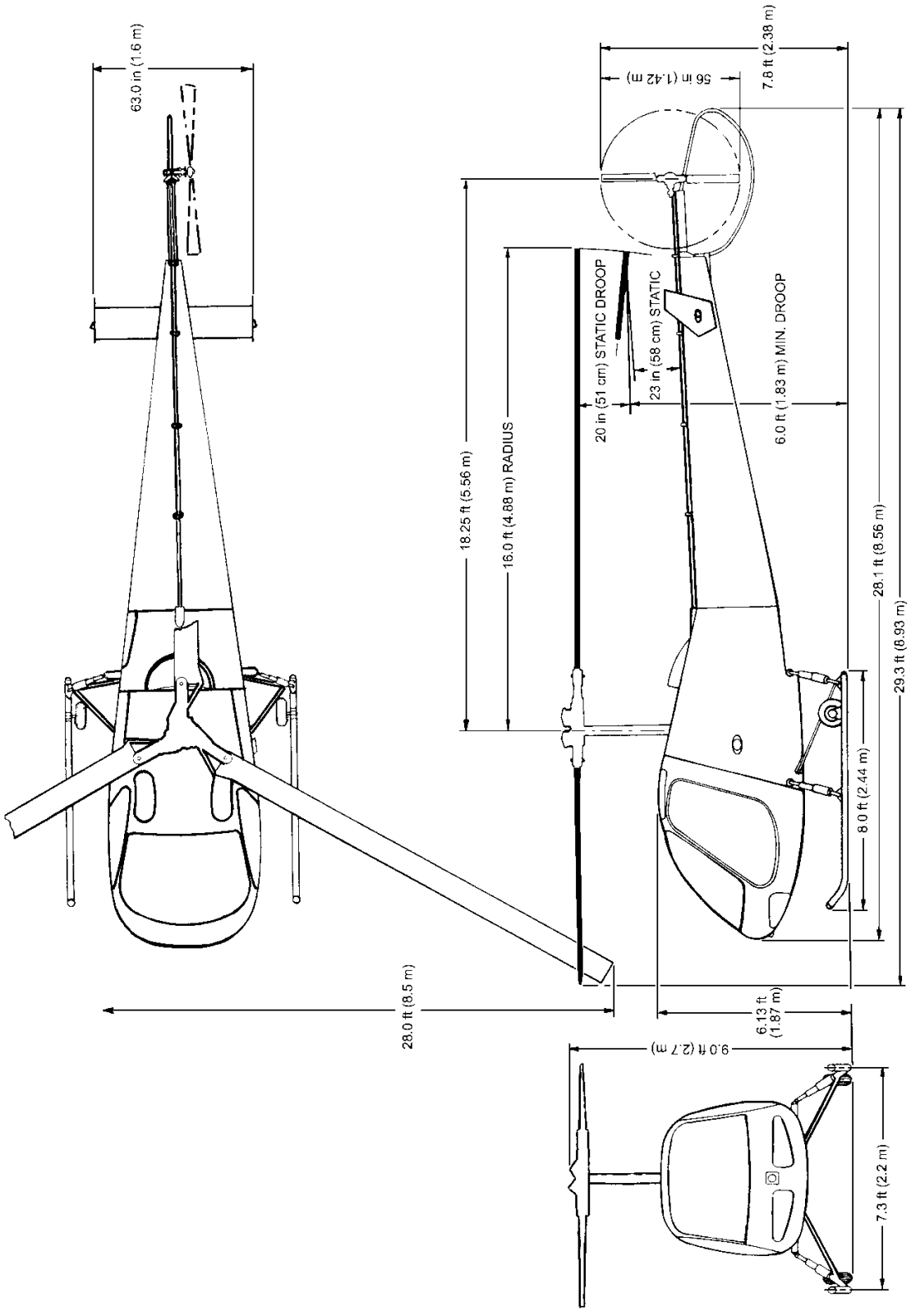

Sheet 2 of 4

Figure 2-1. Principal Dimensions - F-28F Post-1986 (S/N 744 and Subsequent)

UNCONTROLLED COPY WHEN DOWNLOADED OR PRINTED

Visit www.enstromhelicopter.com for instructions to order an original manual and to register for email notification of updates.

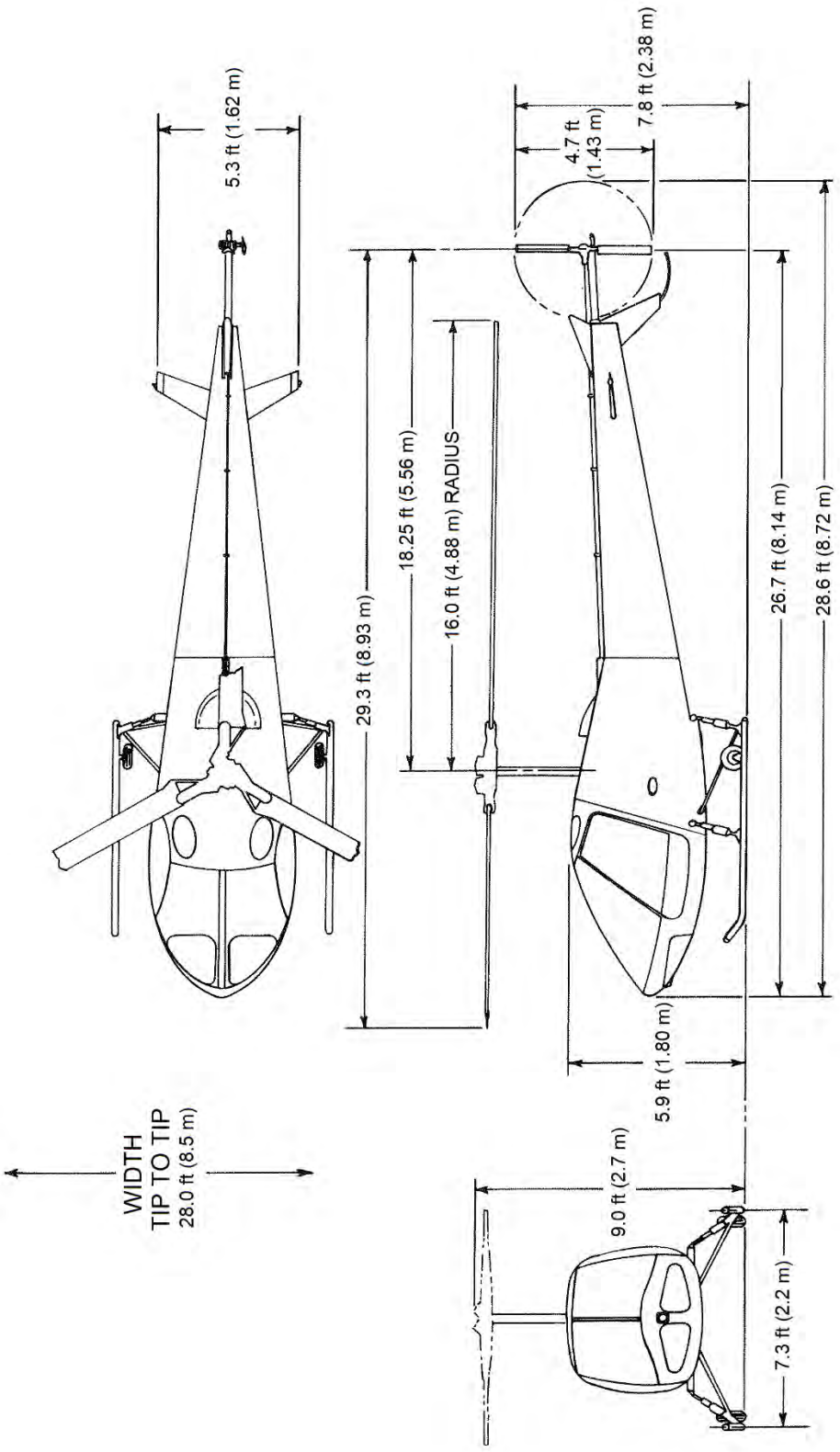

Sheet 3 of 4

Figure 2-1. Principal Dimensions - 280F

UNCONTROLLED COPY WHEN DOWNLOADED OR PRINTED

Visit www.enstromhelicopter.com for instructions to order an original manual and to register for email notification of updates.

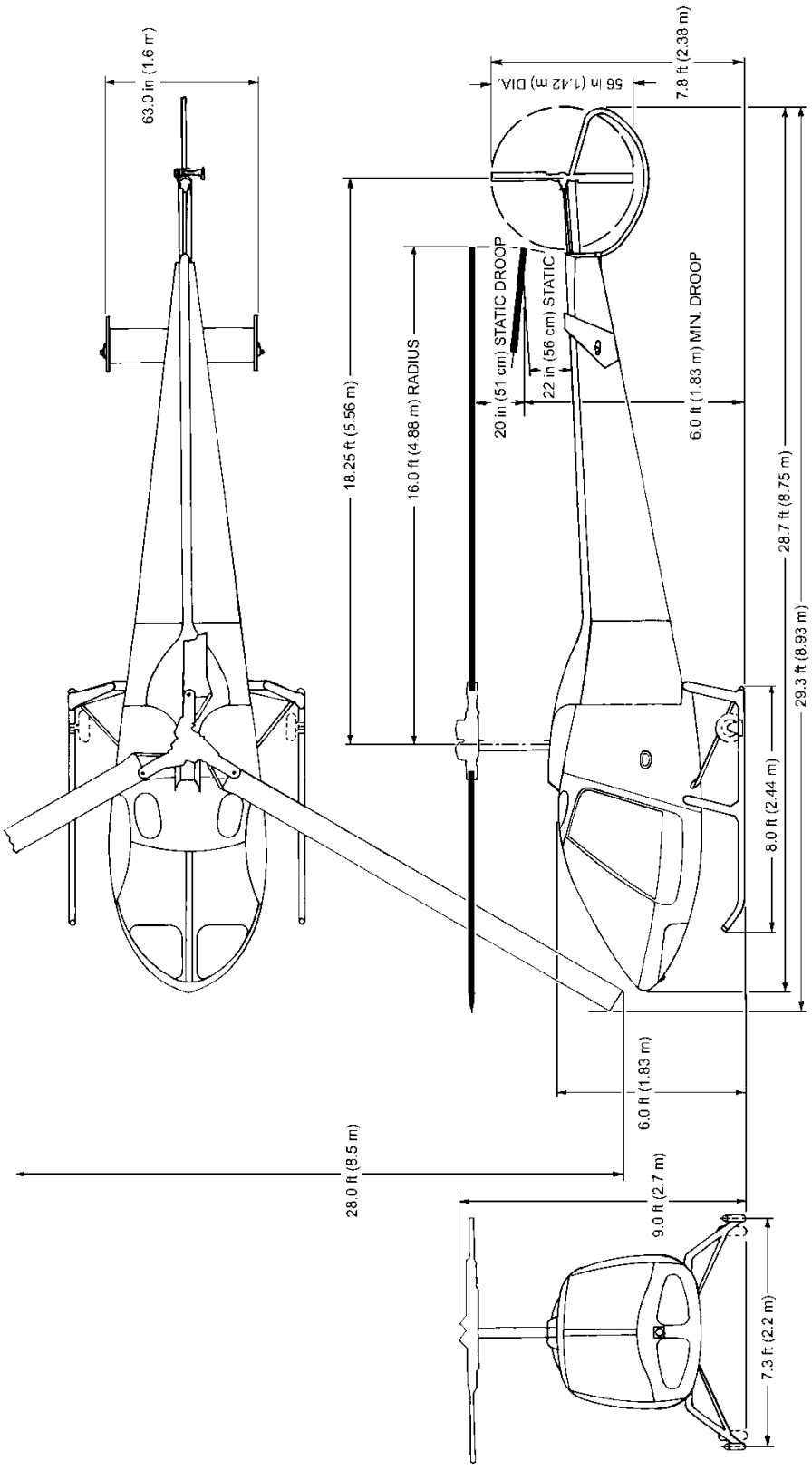

Sheet 4 of 4

Figure 2-1. Principal Dimensions - 280FX

UNCONTROLLED COPY WHEN DOWNLOADED OR PRINTED

Visit www.enstromhelicopter.com for instructions to order an original manual and to register for email notification of updates.

Table 2-1. F-28F/280F/FX Specifications

	Model	
	F-28F	**280F/FX**
Power Plant:		
Designation	HIO-360-F1AD	HIO-360-F1AD
Cylinders	4	4
Normal Power	225 (168 kW)	225 (168 kW)
Normal RPM	3050	3050
Specific Fuel Consumption	.69 lb/hp-hr (.42 g/W-h)	.69 lb/hp-hr (.42 g/W-h)
Weight	324 lb (147 kg)	324 lb (147 kg)
Oil	10 qt (9.5 l)	10 qt (9.5 l)
Turbocharger:		
Designation	3BT5EE10J2	3BT5EE10J2
Operating RPMs:		
Engine	2900-3050	2900-3050
Main Rotor	351 @ 3050	351 @ 3050
Tail Rotor	2514 @ 3050	2514 @ 3050
Autorotation (Main Rotor)	334-385	334-385
Ratios:		
Lower Pulley to Upper Pulley	1.213:1	1.213:1
Upper Pulley to Main Rotor	7.154:1	7.154:1
Engine to Main Rotor	8.6781:1	8.6781:1
Upper Pulley to Tail Rotor	1:1	1:1
Main Rotor System:		
Number of Blades	3	3
Blade Cord - Each	9.5 in (24.1 cm)	9.5 in (24.1 cm)
Diameter	32 ft (9.75 m)	32 ft (9.75 m)
Disc Area	804 ft^2 (74.7 m^2)	804 ft^2 (74.7 m^2)
Tail Rotor System:		
Number of Blades	2	2
Blade Cord - Each	4.4 in (11.2 cm)	4.4 in (11.2 cm)
Diameter	4.67 ft (1.42 m)	4.67 ft (1.42 m)
Disc Area	17 ft^2 (1.58 m^2)	17 ft^2 (1.58 m^2)
Miscellaneous:		
Maximum Speed - V_{NE}	112 mph	117 mph
Maximum Gross Weight	2600 lb (1179 kg)	2600 lb (1179 kg)
Fuel Capacity (Useable)	40 gal (151.4 l)	40 gal (151.4 l)

UNCONTROLLED COPY WHEN DOWNLOADED OR PRINTED

Visit www.enstromhelicopter.com for instructions to order an original manual and to register for email notification of updates.

2-5 LANDING GEAR

A. Main Landing Gear: The main landing gear consists of two tubular aluminum skids attached to the airframe by means of the forward and aft cross tubes through four air-oil oleo struts. The struts cushion ground contact during landing. Drag struts give the gear stability and strength and prevent fore and aft movement during ground contact maneuvers. Replaceable hardened steel skid shoes are installed on each skid to resist skid wear on hard surfaces.

B. Tail Rotor Guard: A tubular aluminum tail rotor guard is installed on the aft end of the tailcone. It acts as a warning to the pilot upon an inadvertent tail-low landing and aids in protecting the tail rotor from damage.

WARNING: ENSURE THE LOCKING PIN IS INSTALLED IN GROUND HANDLING WHEEL BEFORE REMOVING THE WHEEL BAR FROM THE WHEEL ASSEMBLY AND MOVING THE AIRCRAFT.

C. Ground Handling Wheels: Each landing gear skid tube has ground handling wheels or provisions for installing removable ground handling wheel assemblies. Each assembly has a manually operated over-centering device to lift the skids clear of the ground. The ground handling wheels should be retracted for engine run-up. If the aircraft has optional removable Brackett® wheels, they should be removed before engine run-up.

2-6 ENGINE

The F-28F/280F series helicopters are powered by a Textron-Lycoming HIO-360 series piston engine. The Textron-Lycoming HIO-360 series engine is a four cylinder, direct drive, horizontally opposed, air cooled, fuel injected engine. The F-28F/280F series helicopters are equipped with an Enstrom installed turbocharger system which allows the engine to produce its rated horsepower up to the certified altitude limit.

2-7 ENGINE COOLING

A fan mounted on the engine crankshaft flange forces cooling air through a shroud assembly and baffles onto the engine cylinders. A portion of the cooling air is diverted through ducting to the engine oil cooler(s). If the optional cabin heating system is installed, a portion of the cooling air is directed to the heater shroud.

2-8 FLIGHT CONTROLS

The flight controls include three primary systems: the collective, cyclic, and anti-torque/directional controls. The flight control systems are not hydraulically boosted. The collective flight control system incorporates a spring capsule that balances the steady collective forces from the main rotor system. The cyclic control system also incorporates spring capsules used to trim out the control system forces produced by the mail rotor system. The spring capsules are part of electrical trim assemblies that are controlled by a switch located on the cyclic stick grip. The aircraft also has fixed horizontal and vertical stabilizers mounted on the tailcone to provide additional stability during forward flight.

UNCONTROLLED COPY WHEN DOWNLOADED OR PRINTED

Visit www.enstromhelicopter.com for instructions to order an original manual and to register for email notification of updates.

2-9 POWER TRAIN

The power train includes the main rotor transmission, upper pulley/overrunning clutch assembly, drive belt, belt drive system, tail rotor drive shaft, and the tail rotor transmission.

A. Main Rotor Transmission: The main rotor transmission provides a 7.154:1 reduction ratio between the upper pulley and main rotor system. The transmission incorporates an over-running clutch in the upper pulley which allows the main and tail rotors to over-run when the engine is throttled back for autorotations. The transmission has a sight gauge which is located on the aft right side and is visible through a panel in the baggage compartment or through the upper access step. Refer to Table 4-1 for system capacity and approved oils and Refer to Table 4-2 for servicing intervals. A magnetic drain plug located on the bottom left aft side of the transmission can be checked for metal particle contamination. All 280FX aircraft are equipped with chip detector annunciator in the instrument panel. Starting with serial number 744, F-28F aircraft may be equipped with the chip detector annunciator as optional equipment. The chip detector is standard equipment on all later production F-28F aircraft.

B. Tail Rotor Transmission: The tail rotor transmission supports and drives the tail rotor assembly. The transmission utilizes a splash lubricated, non-vented, closed oil system. A filler port and a sight gauge are located in the aft end of the transmission. A magnetic drain plug located on the bottom aft side of the transmission can be checked for metal particle contamination. All 280FX aircraft are equipped with chip detector annunciator in the instrument panel. Starting with serial number 744, F-28F aircraft may be equipped with the chip detector annunciator as optional equipment. The chip detector is standard equipment on all later production F-28F aircraft. Refer to Table 4-1 for system capacity and approved oils and refer to Table 4-2 for servicing intervals. An inspection plug, used to visually inspect the transmission gears, is located on the top right side of the transmission. The tail rotor transmission reduction ratio is 1:1.

2-10 MAIN ROTOR ASSEMBLY

The main rotor assembly is a three bladed, high inertia, fully articulated rotor system. Three hydraulic dampers are incorporated to control the lead-lag motions of the blades.

2-11 TAIL ROTOR ASSEMBLY

The tail rotor assembly is a two bladed, teetering, delta hinged rotor assembly.

2-12 OPERATING LIMITATIONS AND RESTRICTIONS

Refer to the applicable F-28F/280F/280FX Rotorcraft Flight Manual for the aircraft operating limitations and restrictions.

2-13 PLACARDS

Refer to the applicable F-28F/280F/280FX Rotorcraft Flight Manual for the required placards.

UNCONTROLLED COPY WHEN DOWNLOADED OR PRINTED

Visit www.enstromhelicopter.com for instructions to order an original manual and to register for email notification of updates.

2-14 VENDOR INFORMATION

The following components listed in Table 2-2 are to be maintained I/A/W the manufacturer's instructions to ensure the continued airworthiness of the aircraft. The owner/operator is responsible for ensuring that current maintenance publications are available to ensure continued airworthiness of the aircraft.

Table 2-2. Vendor Contact Information

Component	**Part Number** (Note 1)	**Manufacturer** (Note 1)	
Engine	M/N HIO-360-F1AD	Textron-Lycoming 625 Oliver Street Williamsport, PA 17701	(570) 327-7049 www.lycoming.com
Magneto	SYS P/N 66E21585-70	Hartzell Engine Technologies 2900 Selma Highway Montgomery, AL 36116	(877) 359-5355 www.hartzell.aero
	P/N 10-682605-13		
Alternator	P/N 32C19553 (24V) P/N ALX-8521LS (12V) P/N ALU8521LS (24V)		
Fuel Pump	P/N 62D26035		
Turbocharger (Note 2)	M/N 3BT5EE10J2 P/N 600700-0000		
Starter Vibrator	P/N 10-382780-123 (12V) P/N 10-400608-243 (24V)	Teledyne Continental Motors 2039 Broad Street Mobile, AL 36615	(630) 513-9599 www.aviall.com
Fuel Servo	M/N RSA-5AB1 P/N 2524858-5	Precision Airmotive Corporation 14800 40th Avenue, North East Marysville, WA. 98271	(360) 651-8282 www.precisionairmotive.com
Fuel Boost Pump	P/N A-10019-D (12V) P/N A-10019-E (24V)	Weldon Pump 640 Golden Oak Parkway Oakwood Village, Ohio 44146	(440) 232-2282 www.weldonpumps.com
Scavenge Oil Pump	P/N 101678-0002	Kelly Aerospace Power Systems 1404 E. South Blvd. Montgomery, AL 36116	(877) 359-5355 www.hartzell.aero
Starter	P/N 149-12HT (12V) P/N 149-24HT (24V)	Sky-Tec 350 Howard Clemmons Road Granbury, TX 78230	(877) 359-5355 www.hartzell.aero
Battery	P/N RG-35A (12V) P/N RG24-11M (24V)	Concorde Battery Corporation 2009 San Bernardino Road West Covina, CA 91790	(800)757-0303 www.concordebattery.com
EGT Indicator	P/N 45817	Alcor 300 Breesport San Antonio, TX 78216	(800) 354-7233 www.alcorinc.com
Graphic Engine Monitor (Note 3)	M/N GEM 603 M/N GEM 610 M/N GEM 610C (P/N GEM-610C-266)	Insight Instrument Corporation 599 Industrial Drive Fort Erie, Ontario, Canada L2A 5M4	(905) 871-0733 techsupport@insightavionics.com
	M/N EDM-700	J. P. Instruments Inc. P.O. Box 7033 Huntington Beach, CA 92646	(800) 345-4574 www.jpinstruments.com

UNCONTROLLED COPY WHEN DOWNLOADED OR PRINTED

Visit www.enstromhelicopter.com for instructions to order an original manual and to register for email notification of updates.

Table 2-2. Vendor Contact Information

Component	**Part Number** (Note 1)	**Manufacturer** (Note 1)	
Tension-Torson (TT) Straps	P/N AA-ECD-084-280	Airwolf Aerospace LLC 15369 Madison Rd. Middlefield, OH 44062-8404	(440) 632-1687 (440) 632-1685 Fax www.airwolfaerospace.com info@airwolfaerospace.com
Anti-Collision Strobe Landing Light	P/N 02-0250276-00 P/N 36-0050626-01 P/N 01-0790340-03 P/N 01-0790340-04 P/N 01-0771833-20	Whelen Aerospace Technologies 210 Airport Drive East Sebastian, FL 32958	(860) 526-9504 www.flyWAT.com info@flyWAT.com
Landing Light	P/N 01-1030-H-A( )	AeroLEDs, LLC 8475 W. Elisa St. Boise, ID 83709	(208) 850-3297 https://aeroleds.com/contact sales@AeroLEDs.com
Clock	M800	Davtron 427 Hillcrest Way Emerald Hills, CA 94062	Tel: 1-866-369-5588; Fax: 650-369-9988 www.davtron.com info@davtron.com
Magnetic Compass	NV2C-28V( )	SIRS Navigation Ltd. Compass House – Bowes Estate Wrotham Road, Meopham Kent DA13 OQB England	Tel: +44 (0) 1474-816320 Fax: +44 (0) 1474-816321 sales@sirs.co.uk https://www.sirs.co.uk/contact

Notes:

1. The manufacturer of the component may differ depending on the time the aircraft was manufactured or overhauled. Refer to the manufacturer's data plate affixed to the component for accurate part number information.
2. Turbocharger 3BT5EE10J2 installation per STC SE484GL.
3. Graphic Engine Monitor GEM 610C installation per STC SH13-45.

UNCONTROLLED COPY WHEN DOWNLOADED OR PRINTED

Visit www.enstromhelicopter.com for instructions to order an original manual and to register for email notification of updates.

2-15 SPECIAL TOOLS

The special tools listed in Table 2-2 are used for removal, installation, and overhaul of components used on the F-28F/280F series aircraft:

NOTE: The special tools listed in Table 2-2 are available through Enstrom's Tool Rental program. Contact Enstrom Helicopter Product Support for details.

Table 2-3. Special Tools

Part Number	Nomenclature
T-0003	Main Rotor Lead/Lag Lower Nut Tool
T-0005	Damper Rod End Removal Tool
T-0009	Main Rotor Blade Bolt Guide Bullet
T-0011	Main Rotor Hoist Sling
T-0013	Main Rotor Lamiflex Nut Socket
T-0014	Needle Point Grease Adapter
T-0016	Lower Swashplate Gimbal Tool
T-0017	Transmission Hoist Eye
T-0022	Collective Spring Capsule Retainer Tool
T-0026	Main Rotor Blade Tab Bending Tool
T-0027	Main Rotor Blade Tab Angle Tool
T-0029-SET	Idler Assembly/Disassembly Tool
T-0035	Oleo Disassembly Tool
T-0036	Blade Grip Seal Installation Tool
T-0044	Pulley Alignment Tool
T-0045-1	Lower Swashplate Dogleg Puller
T-0048	Main Rotor Mast Nut Tool
T-0051-1, -3	Main Rotor Flapping Nut Tool
T-0054	Swashplate Dogleg Alignment Tool
T-0056-3	Tail Rotor Thrust Bearing Retention Nut Tool
T-0057	Damper Bleeding Fixture
T-0068-3	Tail Rotor Transmission Output Shaft Runout Tools
T-0078	Engine Adapter Installation Tool
T-0079-1	Bearing Swagging Tool

UNCONTROLLED COPY WHEN DOWNLOADED OR PRINTED

Visit www.enstromhelicopter.com for instructions to order an original manual and to register for email notification of updates.

Table 2-3. Special Tools - Continued

Part Number	Nomenclature
T-0080	Tail Rotor Rigging Tool
T-0086	Upper Guidetube Nut Tool
T-0087-15	Tail Rotor Assembly Static Balance Mandrel
T-0088	Tail Rotor Driveshaft Alignment Tool
T-0092-5	Taper Pin Removal Tool
T-0095	Damper Tool
T-0100-1	Swashplate DU Bushing Removal Tool
T-0102-1-SET	Guidetube Disassembly Tool
T-0104-1	Swashplate Bushing Installation Tool
T-0111-SET	Correlator Rigging Tool
T-0121-1	Tail Rotor Static Balance Stand
T-0127	Magnetic Pickup Bracket
T-0133-1	Pulley Restraint Tool Assembly
T-0134	Plate Assembly (Lower Swashplate Assembly)
T-0135-1-SET	Main Rotor Transmission Pinion Crows Foot
T-0140	Tail Rotor Rigging Tool
T-0151-1	Universal Block Bearing Tool Set (Grease Lubricated)
T-0152	Tail Rotor Balance Tool (Photo Cell Bracket)
T-0156	Oil Filler Tube Adapter Wrench
T-0160-1	Damper Ring Seal Installation Tools
T-0168-1	Tail Rotor Assembly Holder
T-0169-1	Oleo Disassembly Tool
T-0174-1	Hub Puller
T-0179	Magneto Spring Installation Tool
T-0197-7	MR Hub Nut Torque Multiplier Wrench
T-0198-11	Enabler, Oil Drain MRGB
T-0204	Fan Shroud Alignment Tool

UNCONTROLLED COPY WHEN DOWNLOADED OR PRINTED

Visit www.enstromhelicopter.com for instructions to order an original manual and to register for email notification of updates.

Table 2-3. Special Tools - Continued

Part Number	Nomenclature
T-1575	Swashplate Centering Tool
T-1709	Guidetube Bearing Collar Tool
T-1758	Guidetube Clamps
T-1775	Cyclic Centering Rigging Tool
T-1794	Weight and Balance Datum Tool
T-28-16101	Swashplate Lock
T-2893	Tail Rotor Needle Teeter Bearing Removal/Installation Tool Kit
T-2896-1	Damper Bleeding/Servicing Tool (2 Required)
*	Main Rotor Transmission Stand
*	Main Rotor Hub Stand
*	Sprag Clutch Purge Tool
ATP761	Digital Mast Torque Multiplier

* Contact the Enstrom Helicopter Product Support for assistance in obtaining these tools.

UNCONTROLLED COPY WHEN DOWNLOADED OR PRINTED

Visit www.enstromhelicopter.com for instructions to order an original manual and to register for email notification of updates.

2-16 TORQUE DATA

Unless specified in Table 2-4 and/or in this manual's maintenance procedures or as called out in the component manufacturer's specifications, all hardware should be torqued to standard torque values listed in Tables 2-5 through 2-13.

Table 2-4. Special Torque Values

	Location	Torque Value
1.	Main rotor mast nut	400 ft-lb/542.3 Nm
2.	Main rotor transmission pinion nut	250 ft-lb/339 Nm
3.	Main rotor blade attachment nuts	50 ft-lb/68.2 Nm
4.	Main rotor blade drag link nuts	140 in-lb/15.9 Nm
5.	Main rotor damper pivot nut	190 in-lb/21.6 Nm
6.	Main rotor hub U-block lower nut	50 ft-lb/67.8 Nm
7.	Main rotor hub U-block upper nut	20 ft-lb/27.1 Nm
8.	Lamiflex bearing retention nut	12-15 in-lb/1.4-1.7 Nm
9.	Upper swashplate guidetube nuts	240 in-lb/27.1 Nm
10.	Engine mount nut	460-500 in-lb/52-56.5 Nm
11.	Tailcone attachment bolts	240 in-lb/27.3 Nm
12.	Tail rotor assembly retention bolt	300 in-lb/34.1 Nm
13.	Tail rotor blade grip nuts[1]	75 in-lb/8.5 Nm
14.	Tail rotor thrust bearing retention nut	80-90 ft-lb/108.5-122.0 Nm
15.	Lower engine pulley to crankshaft bolts	50 ft-lb/67.8 Nm
16.	Pitch change bellcranks	
	a. Push/pull rod bolt	40 in-lb/4.5 Nm
	b. Push/pull rod bolt with floating bushing	75 in-lb/8.5Nm
17.	Landing gear pivot points (all)	40-60 in-lb/4.5-6.8 Nm
18.	Landing gear oleo pivots points (all)	2 lb/0.9 kg drag ([2])
19.	Tail rotor driveshaft taper pins	25 in-lb/2.8 Nm
20.	Dogleg nut	130-140 in-lb/14.7-15.9 Nm
21.	Dogleg to swashplate nut	40-60 in-lb/4.5-6.8 Nm
22.	Idler yoke/shaft jam nut	40-45 in-lb/4.5-5.1 Nm
23.	Fuel pump and fuel injector attach nuts	204 in-lb/23.1 Nm
24.	Main Rotor Transmission Magnetic Pick-up	60-65 in-lb/6.8-7.3 Nm
25.	Clutch Cable Jam Nut	175-200 in-lb/19.8-22.6 Nm
26.	Clutch Cable Rod End Jam Nut	80 in-lb/9 Nm
27.	Throttle and Mixture Cable Jam Nuts	80 in-lb/9 Nm
28.	Lycoming STD-2043 Exhaust Self-Locking Nuts	204 in-lb/23 Nm
29.	Tail rotor gearbox sight glass	60 in-lb/6.8 Nm
30.	Spark plugs[3]	35 ft-lb/47.5 Nm

[1] Torque for oversize bolts: 140 in-lb/15.9 Nm maximum.
[2] Refer to Paragraph 8-9, D, (5).
[3] Lycoming Service Instruction No. 1042

UNCONTROLLED COPY WHEN DOWNLOADED OR PRINTED

Visit www.enstromhelicopter.com for instructions to order an original manual and to register for email notification of updates.

Table 2-4. Special Torque Values - Continued

Location	Torque Value

1 Foot-Pound (ft-lb) = 1.3558 Newton Meter (Nm)
1 Inch-Pound (in-lb) = 0.113 Newton Meter (Nm)
1 Nm = 0.7376 ft-lb
1 Nm = 8.851 in-lb

UNCONTROLLED COPY WHEN DOWNLOADED OR PRINTED

Visit www.enstromhelicopter.com for instructions to order an original manual and to register for email notification of updates.

INTENTIONALLY LEFT BLANK

UNCONTROLLED COPY WHEN DOWNLOADED OR PRINTED

Visit www.enstromhelicopter.com for instructions to order an original manual and to register for email notification of updates.

Table 2-5. Torque Values for Nuts and Bolts

CAUTION THE FOLLOWING TORQUE VALUES ARE DERIVED FROM OIL FREE CADMIUM PLATED THREADS.				
	TORQUE LIMITS RECOMMENDED FOR INSTALLATION (BOLTS LOADED PRIMARILY IN SHEAR) (inch-pounds)		MAXIMUM ALLOWABLE TIGHTENING TORQUE LIMITS (inch-pounds)	
Thread Size	Tension type nuts MS20365 and AN310 (40,000 psi in bolts)	Shear type nuts MS20364 and AN320 (24,000 psi in bolts)	Nuts MS20365 and AN310 (90,000 psi in bolts)	Nuts MS20364 and AN320 (54,000 psi in bolts)
FINE THREAD SERIES				
8-36	12-15	7-9	20	12
10-32	20-25	12-15	40	25
1/4-28	50-70	30-40	100	60
5/16-24	100-140	60-85	225	140
3/8-24	160-190	95-110	390	240
7/16-20	450-500	270-300	840	500
1/2-20	480-690	290-410	1100	660
9/16-18	800-1000	480-600	1600	960
5/8-18	1100-1300	600-780	2400	1400
3/4-16	2300-2500	1300-1500	5000	3000
7/8-14	2500-3000	1500-1800	7000	4200
1-14	3700-5500	2200-3300*	10,000	6000
1-1/8-12	5000-7000	3000-4200*	15,000	9000
1-1/4-12	9000-11,000	5400-6600*	25,000	15,000
COARSE THREAD SERIES				
8-32	12-15	7-9	20	12
10-24	20-25	12-15	35	21
1/4-20	40-50	25-30	75	45
5/16-18	80-90	48-55	160	100
3/8-16	160-185	95-100	275	170
7/16-14	235-255	140-155	475	280
1/2-13	400-480	240-290	880	520
9/16-12	500-700	300-420	1100	650
5/8-11	700-900	420-540	1500	900
3/4-10	1150-1600	700-950	2500	1500
7/8-9	2200-3000	1300-1800	4600	2700

The above torque values may be used for all cadmium-plated steel nuts of the fine or coarse thread series which have approximately equal number of threads and equal face bearing areas. * Estimated corresponding values.

Table 2-6. Fittings, Tubing



Aluminum Alloy Tubing



Steel Tubing

Fitting Size	Tubing OD (inches)	6061-O & 5052-O Aluminum-Alloy Tube: Fitting or Nut Torque (in-lb)	Steel Tube: Fitting or Nut Torque (in-lb)
-2	1/8	20-30	75-85
-3	3/16	25-35	95-105
-4	1/4	50-65	135-150
-5	5/16	70-90	170-200
-6	3/8	110-130	270-300
-8	1/2	230-260	450-500
-10	5/8	330-360	650-700
-12	3/4	460-500	900-1000

UNCONTROLLED COPY WHEN DOWNLOADED OR PRINTED

Visit www.enstromhelicopter.com for instructions to order an original manual and to register for email notification of updates.

Table 2-7. Fittings, Hose Assemblies





Flexible Hose or Tube Fittings (excluding nylon pitot static lines) Measurements based on Hose Inside Diameter or Fitting Size						
Fitting Size	Tube Size (inches)	Thread	Flex Hose and 6061-T6 Aluminum Alloy Torque Limits (in-lb)		Steel (Torque Limits (in-lb)	
			Min	Max	Min	Max
-3	3/16	3/8-24	30	70	90	140
-4	1/4	7/16-20	70	120	135	185
-5	5/16	1/2-20	70	120	180	230
-6	3/8	3/4-16	130	180	270	345
-8	1/2	3/4-16	300	400	450	525
-10	5/8	7/8-14	430	550	650	750
-12	3/4	1-1/6-12	650	800	900	1,100

Table 2-7.1. Fittings



AN924 Nut
Flared Tube



AN814
Plug and Bleeder



AN6289 Nut (Undercut)
Flared Tube

Nominal Tube O.D. (inches)	Fitting Thread Size	Torque Limits (inch-pounds)									
		For Gasketed Aluminum or Steel Fittings*						For Jamnuts and Fittings Without Gaskets* *			
		AN924 Nut AN815 Union		AN814 Plug		AN6289 Nut		Aluminum		Steel	
		Min	Max	Min	Max	Min	Max	Min	Max	Min	Max
1/8	5/16-24	25	35	10	16	25	35	35	50	-	-
3/16	3/8-24	50	75	30	40	50	75	65	80	70	90
1/4	7/16-20	55	80	40	65	75	100	90	105	110	130
5/16	1/2-20	75	100	60	80	90	120	105	125	140	160
3/8	9/16-18	100	150	80	120	150	200	125	145	225	275
1/2	3/4-16	180	230	150	200	200	250	240	280	400	450
5/8	7/8-14	250	350	200	350	275	400	330	370	550	650
3/4	1-1/6-12	420	600	300	500	450	650	540	660	800	960

* For use with O-rings and aluminum, asbestos, leather, Teflon, gaskets, or washers.
* * For combinations of materials (either jamnut, fittings, or boss), use the lowest applicable values shown.

UNCONTROLLED COPY WHEN DOWNLOADED OR PRINTED

Visit www.enstromhelicopter.com for instructions to order an original manual and to register for email notification of updates.

Table 2-8. Steel Fittings Using Jam Nuts or Straight Thread O-Ring Boss



AN814
Plug and Bleeder
(Steel)



MS51525
Flared AN to Straight Pipe
Thread Male Adapter

Tube Size	Thread Size (inches)	Torque Limits (inch-pounds)	
		Min	Max
-02	5/16-24	72	84
-03	3/8-24	95	105
-04	7/16-20	155	180
-05	1/2-20	170	180
-06	9/16-18	275	290
-08	3/4-16	480	515
-10	7/8-14	515	575

Table 2-9. Pitot Static System Nylon Fittings



268N04X02: Adapter



264N04: Union Tee



269N04X02: Male Elbow

Nominal Tube O.D. (inches)	Thread Size (inches)	Torque Limits (inch-pounds)	
		Min	Max
1/4	7/16-20	7	10

Table 2-10. Pipe Plugs



MS20822
90° AN to Pipe
Fitting



MS20823
45° AN to
Pipe Fitting



AN816
Nipple, Flared
Tube and Pipe
Thread



AN932 Plug



MS20913
Plug, Square
Head

Thread Size (inches)	Torque Limits (inch-pounds)
1/16-27 NPT	40 to 44
1/8-27 NPT	40 to 44
1/4-18 NPT	85 to 94
3/8-18 NPT	110 to 121
1/2-14 NPT	160 to 176
3/4-14 NPT	230 to 252
1-11-1/2 NPT	315 to 347

UNCONTROLLED COPY WHEN DOWNLOADED OR PRINTED

Visit www.enstromhelicopter.com for instructions to order an original manual and to register for email notification of updates.

Table 2-11. Crush Type Gaskets

NOTE

Turn the part until the sealing surfaces are in contact and then tighten to the angle of turn listed for the appropriate thread size.

Thread Pitch On Part to be Tightened (Threads per Inch)	Angle of Turn	
	Aluminum	Copper
8	135°	67°
10	135°	67°
12	180°	90°
14	180°	90°
16	270°	135°
18	270°	135°
20	270°	135°
24	360°	180°
28	360°	180°

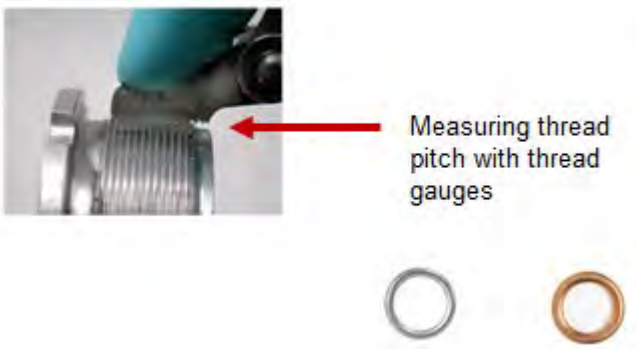

Table 2-12. Prevailing Torque Values for Re-used Self-Locking Nuts

Bolt, or Screw Thread Size (inches)	Seating Torque (in-lb ±10%)	Prevailing Torque Max. On or Off (in-lb)	Prevailing Torque Min. On or Off (in-lb)
4-40	8	5	0.5
6-32	15	8	1.0
8-32	28	12	1.5
AN3	45	18	2.0
AN4	110	40	3.0
AN5	190	85	5.0
AN6	345	110	9.0
AN7	545	150	12.0
AN8	850	220	16.0

If not listed in Table 2-12, a self-locking nut can be reused as long as a wrench is required to turn it on the bolt.

UNCONTROLLED COPY WHEN DOWNLOADED OR PRINTED

Visit www.enstromhelicopter.com for instructions to order an original manual and to register for email notification of updates.

Table 2-13. Brass Bolts

Bolt Thread Size (Inch)	Coarse Thread	Bolt Thread Size (Inch)	Fine Thread
2-56	2 in-lb	2-64	2.5 in-lb
4-40	4.3 in-lb	4-48	5.4 in-lb
5-40	6.3 in-lb	5-44	7.7 in-lb
6-32	7.9 in-lb	6-40	9.9 in-lb
8-32	16.2 in-lb	8-36	18.0 in-lb
10-24	18.6 in-lb	10-32	25.9 in-lb
1/4”-20	61.5 in-lb	1/4"-28	77 in-lb
5/16”-18	107 in-lb	5/16”-24	116 in-lb
3/8”-16	16.0 ft-lb	3/8”-24	17.7 ft-lb
7/16”-14	26.4 ft-lb	7/16”-20	27.3 ft-lb
1/2”-13	35.2 ft-lb	1/2"-20	37 ft-lb
5/8”-11	76 ft-lb	5/8”-18	85 ft-lb
3/4”-10	104 ft-lb	3/4”-16	102 ft-lb
7/8”-9	159 ft-lb	7/8”-14	158 ft-lb
1”-8	235 ft-lb	1”-14	212 ft-lb

UNCONTROLLED COPY WHEN DOWNLOADED OR PRINTED

Visit www.enstromhelicopter.com for instructions to order an original manual and to register for email notification of updates.

2-17 CONSUMABLE PARTS LIST

Table 2-14 lists the consumable parts and lubricants that are normally used during servicing or periodic inspection of the aircraft. The quantities listed reflect normal inspection intervals; however, they may need to be adjusted if adverse operating conditions require more frequent servicing or inspections.

Refer to the Lycoming Operator's Manual (Document 60297-12) and the Lycoming Parts Catalog (Document PC-406-2) for the consumable parts required for servicing or periodic inspection of the engine.

NOTE: Enstrom does not stock engine parts for customer service use. Obtain engine parts through Lycoming Engines Distribution Partners. For assistance, refer to the Genuine Parts tab on the Lycoming Products web page to find distributors near you (www.lycoming.com).

Table 2-14. Consumable Parts List

	Item	Part Number (Note 1, 3)	Quantity
50 Hour Service			
1.	Grease	C008 and C011	As Required
2.	Silicon Oil	C007	As Required
3.	Oil	C005	As Required
4.	O-ring	NAS1612-2	6 EA (Note 2)
5.	Oil Filter	CH48103	1 EA
100 Hour Service/Inspection			
1.	Same as 50 hour Requirements		
2.	Crush Washer	AN900-8 or MS35769-9	1 EA
3.	Crush Washer	AN900-10 or MS35769-11	1 EA
4.	Oil	C005	1 FL OZ (US)
5.	Oil	C006	7 PT (US)
6.	Air Filter Element	BA-15	1 EA
7.	O-ring	MS28775-2	1 EA (Note 2)
8.	Lockwire	MS20995C25	As Required
9.	Lockwire	MS20995C32	As Required
200 Hour Service/Inspection			
1.	Same as 100 hour requirements		
300 Hour Service/Inspection			
1.	Same as 100 hour requirements		

NOTES:

1 Refer to Table 4-1 C-### index listing
2 Replace on condition
3 Verify configuration, part number and quantity with latest revision of illustrated parts catalog, service letters, and service bulletins as required.

UNCONTROLLED COPY WHEN DOWNLOADED OR PRINTED

Visit www.enstromhelicopter.com for instructions to order an original manual and to register for email notification of updates.

2-18 TAPER PIN SIZE CHART

Table 2-15 lists information pertaining to taper pin part numbers and physical properties.

NOTE: Always check the condition and security of taper pins at every inspection.

NOTE: The dash number of the 28-16323 series taper pins is vibro-etched on the head of the taper pin.

Table 2-15. Taper Pin List

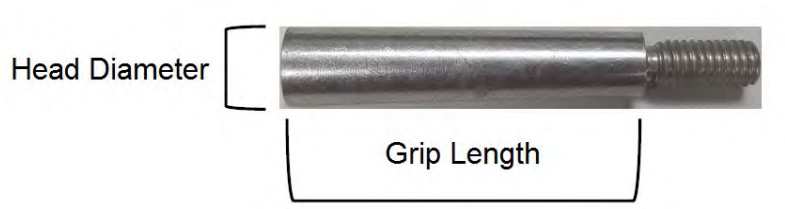

Old Enstrom P/N	Current Enstrom P/N	Head Diameter	Grip Length
AN386-2-7A [1]	AN386-2-7A [1]	0.296 in / 7.5 mm	1.00 in / 25.4 mm
AN386-2-8A [1]	AN386-2-8A [1]	0.302 in / 7.6 mm	1.12 in / 28.4 mm
AN386-2-9A [1]	AN386-2-9A [1]	0.308 in / 7.8 mm	1.26 in / 32 mm
28-13600-3 [2]	28-13623-25 [2]	0.302 in / 7.6 mm	1.00 in / 25.4 mm
28-13600-4 [2]	28-13623-27 [2]	0.307 in / 7.7 mm	1.00 in / 25.4 mm
28-13600-5 [2]	28-13623-29 [2]	0.314 in / 7.9 mm	1.00 in / 25.4 mm
NA	28-13623-31 [2]	0.316 in / 8 mm	1.00 in / 25.4 mm
28-13600-7 [3]	28-13623-13 [3]	0.310 in / 7.8 mm	1.12 in / 28.4 mm
28-13600-8 [3]	28-13623-17 [3]	0.318 in / 8 mm	1.12 in / 28.4 mm
NA	28-13623-15 [3]	0.315 in / 8 mm	1.12 in / 28.4 mm
28-13600-6 [3]	28-13623-11 [3]	0.305 in / 7.7 mm	1.12 in / 28.4 mm

[1] Standard
[2] Tail Rotor Transmission
[3] Main Rotor Transmission

UNCONTROLLED COPY WHEN DOWNLOADED OR PRINTED

Visit www.enstromhelicopter.com for instructions to order an original manual and to register for email notification of updates.

INTENTIONALLY LEFT BLANK

UNCONTROLLED COPY WHEN DOWNLOADED OR PRINTED

Visit www.enstromhelicopter.com for instructions to order an original manual and to register for email notification of updates.

SECTION 3

AIRWORTHINESS LIMITATIONS

The Airworthiness Limitations Section is FAA approved and specifies inspections and other maintenance required under 14 CFR §§ 43.16 and 91.403 of the Federal Aviation Regulations unless an alternative program has been FAA approved.

For EASA approval, this Airworthiness Limitations section is approved, and variations must also be approved.

FAA APPROVED BY _____ DATE 7/2/12

MANAGER
CHICAGO AIRCRAFT CERTIFICATION OFFICE
CENTRAL REGION
FEDERAL AVIATION ADMINISTRATION

UNCONTROLLED COPY WHEN DOWNLOADED OR PRINTED

Visit www.enstromhelicopter.com for instructions to order an original manual and to register for email notification of updates.

SECTION 3

LOG OF REVISIONS

Rev. Num.	Rev. Date	Pages Affected	Approval Date	FAA Approved
1	4/3/86	MM-3-1	4/3/86	W. F. Horn
2	11/18/88	MM-3-13 and MM-3-20	11/18/88	W. F. Horn
3	N/A	None	N/A	N/A
4	6/21/12	MM-3-1 through MM-3-6	Jul 2/12	G. Michalik
5	Nov 5/13	None	N/A	N/A
6	Apr 7/15	None	N/A	N/A
7	Aug 22/16	MM-3-2 through MM-3-4	Aug 26/16	G. Michalik
8	Sep 20/17	MM-3-2, MM-3-3	Oct 10/17	M. Javed
9	Dec 14/17	None	N/A	N/A
10	Feb 7/19	None	N/A	N/A
11	Oct 25/19	None	N/A	N/A
12	Jul 16/20	None	N/A	N/A
13	Jan 5/24	None	N/A	N/A
14	Jul 23/24	None	N/A	N/A
15	Sep 26/24	MM-3-1 through MM-3-6	Oct 28/2024	B. Diakhite AIR-765

UNCONTROLLED COPY WHEN DOWNLOADED OR PRINTED

Visit www.enstromhelicopter.com for instructions to order an original manual and to register for email notification of updates.

SECTION 3

EASA LOG OF REVISIONS

Rev. Num.	Date	EASA Approved
1	9/28/03	Article 3, Commission Regulation (EU) 748/2012
2	9/28/03	Article 3, Commission Regulation (EU) 748/2012
3	N/A	N/A
4	7/9/15	FAA/EASA T.I.P.; FAA Approved on Behalf of EASA by G. Michalik*
5	N/A	N/A
6	N/A	N/A
7	9/9/16	FAA/EASA T.I.P.; FAA Approved on Behalf of EASA by G. Michalik♦
8	10/23/17	N/A
9	N/A	N/A
10	N/A	N/A
11	N/A	N/A
12	N/A	N/A
13	N/A	N/A
14	8/12/24	FAA/EASA T.I.P.▼

* T.I.P., Rev. 4 dated September 22, 2014, Section 3.2.11

♦ T.I.P., Rev. 5 dated September 15, 2015, Section 3.2.11

▼ T.I.P., Rev. 7 dated October 19, 2023, Sections 3.3 and 3.5.12.4

UNCONTROLLED COPY WHEN DOWNLOADED OR PRINTED

Visit www.enstromhelicopter.com for instructions to order an original manual and to register for email notification of updates.

SECTION 3

AIRWORTHINESS LIMITATIONS

TABLE OF CONTENTS

Paragraph	Description	Page
	FAA Cover	MM-3-1
	Log of Revisions	MM-3-2
	EASA Log of Revisions	MM-3-3
	Table of Contents	MM-3-4
3-1.	Retirement Life Items	MM-3-5
3-2.	Mandatory Inspection Items	MM-3-5

UNCONTROLLED COPY WHEN DOWNLOADED OR PRINTED

Visit www.enstromhelicopter.com for instructions to order an original manual and to register for email notification of updates.

SECTION 3

AIRWORTHINESS LIMITATIONS

3-1. RETIREMENT LIFE ITEMS

A. The items listed in Table 3-1 require mandatory retirement at the hours or calendar time established by Enstrom Helicopter Corporation and other component manufacturers.

B. Retirement life components authorized for installation on the F-28F and 280F Series must use the shorter retirement life limit for the life of the component if the component is removed from one model of aircraft and installed on a model with a different retirement life.

3-2. MANDATORY INSPECTION ITEMS

The Enstrom F-28F and 280F Series helicopters have no mandatory inspection items.

Table 3-1. Retirement Life Items

ITEM	PART NUMBER	RETIREMENT LIFE		
		F-28F	280F	280FX
Bearing, Idler Pulley	ECD018-11 (202SZZ)	600 Hrs	600 Hrs	600 Hrs
Bearing, Lower Swashplate	ECD009-11, -13 (5201SBKZZ)	1,200 Hrs+	1,200 Hrs+	On Condition
Bearing, Upper Swashplate	ECD013-11, -13 (Z993L13XR3B)	1,200 Hrs+	1,200 Hrs+	On Condition
Housing, Lower Swashplate	28-16119-1, -3	17,700 Hrs	17,700 Hrs	17,700 Hrs
Main Rotor Drag Link	28-14283-1	13,750 Hrs++	13,750 Hrs++	13,750 Hrs
Tail Rotor Blade	28-150002-1	3,100 Hrs	3,100 Hrs	3,100 Hrs
Tail Rotor Blade Grip	28-150044-1, -3	6,200 Hrs	6,200 Hrs	6,200 Hrs
Tail Rotor Driveshaft Coupling	28-13609-1	1,200 Hrs	1,200 Hrs	N/A
Tail Rotor Driveshaft Flex Pack	28-01041-3	1,200 Hrs	1,200 Hrs	1,200 Hrs
Tail Rotor Gear Set	ECD074-1, -2 (XR-137-2YL, -2R) ECD100* ECD101-1, -2	1,200 Hrs 1,200 Hrs 1,200 Hrs	1,200 Hrs 1,200 Hrs 1,200 Hrs	1,200 Hrs 1,200 Hrs 1,200 Hrs
Tail Rotor Spindle	28-150064-11, -13	1,200 Hrs	1,200 Hrs	1,200 Hrs
Tail Rotor Spindle	28-150074-11, -13	1,200 Hrs	1,200 Hrs	1,200 Hrs
Turbocharger	RJ0332 (325E10-2) 103574-00 (3BT2EE10J2) 600700-0000 (3BT5EE10J2)	2,000 Hrs 2,000 Hrs 2,000 Hrs	2,000 Hrs 2,000 Hrs 2,000 Hrs	2,000 Hrs 2,000 Hrs 2,000 Hrs
Thrust Bearing	28-14320-12, -15	**	**	**
Tachometer Drive Belt (O-Ring)	NAS1611-333	***	***	***
V-band Coupling	LW-13464	500 Hrs♦	500 Hrs♦	500 Hrs♦

UNCONTROLLED COPY WHEN DOWNLOADED OR PRINTED

Visit www.enstromhelicopter.com for instructions to order an original manual and to register for email notification of updates.

* Applies to all dash numbers.

** Retire from service 5 calendar years from date of manufacture all Lamiflex bearings serial number 5997 and prior. Retire from service 5 calendar years from date of installation (defined as the date the Lamiflex bearing packaging is opened) or 8 calendar years from date of manufacture, whichever occurs first, all Lamiflex bearings serial numbers 5998 and subsequent.

*** Retire from service 5 calendar years from date of installation or package opening, or 8 years from date of manufacture, whichever occurs first.

\+ On condition when used with grease fitting.

++ For aircraft certified to 2350 lb maximum weight, component has no time limit. Remove component on condition per maintenance manual inspection criteria.

♦ Effective date July 17, 2023, for new v-band coupling as installed per AD 2023-09-09.

For a v-band coupling in service prior to July 17, 2023, refer to AD 2023-09-09 paragraph (i)(1) for removing and installing a new v-band coupling within the compliance times stated.

Note: Per AD 2023-09-09 paragraph (i)(2), as an alternative to removing the v-band coupling from service, inspections of the v-band coupling may be performed according to the requirements stated in AD 2023-09-09 for a period not to exceed 2 years after the effective date of AD 2023-09-09.

UNCONTROLLED COPY WHEN DOWNLOADED OR PRINTED

Visit www.enstromhelicopter.com for instructions to order an original manual and to register for email notification of updates.

SECTION 4

SERVICING, RECOMMENDED OVERHAULS, INSPECTIONS, AND GENERAL MAINTENANCE

TABLE OF CONTENTS

Paragraph		Page
4-1	**Servicing**	**MM-4-5**
4-2	Description	MM-4-5
4-3	**Fuel System**	**MM-4-23**
4-4	Servicing	MM-4-23
4-5	Draining	MM-4-24
4-5.1	Fuel Filter Assembly Cleaning	MM-4-24
4-6	**Engine Oil System**	**MM-4-25**
4-7	Servicing	MM-4-25
4-8	Draining	MM-4-26
4-9	**Overrunning Clutch**	**MM-4-26**
4-10	Servicing	MM-4-26
4-11	**Main Rotor Transmission**	**MM-4-27**
4-12	Servicing	MM-4-27
4-13	Draining	MM-4-27
4-13.1	Flushing	MM-4-28
4-14	**Tail Rotor Transmission**	**MM-4-29**
4-14.1	Oil Level Check – Tail Rotor Transmission	MM-4-29
4-15	Servicing	MM-4-29
4-16	Draining	MM-4-30
4-16.1	Flushing	MM-4-30
4-17	**Main Rotor Dampers**	**MM-4-31**
4-18	Servicing	MM-4-31
4-19	**Oleos**	**MM-4-32**
4-20	Servicing	MM-4-32
4-21	**Battery**	**MM-4-33**
4-22	Servicing	MM-4-33
4-23	**Lubrication**	**MM-4-33**
4-24	Description	MM-4-33
4-25	**Lower Pulley**	**MM-4-34**
4-26	Lubrication	MM-4-34
4-27	**Main Rotor Blade Grip**	**MM-4-34**
4-28	Lubrication	MM-4-34
4-29	**Main Rotor Flapping Bearings**	**MM-4-36**
4-30	Lubrication	MM-4-36
4-31	**Tail Rotor Pitch Control Bearing**	**MM-4-36**
4-32	Lubrication	MM-4-36
4-33	Lubrication, Preferred Method	MM-4-36
4-34	Lubrication, Alternate Method	MM-4-36
4-35	**Upper Pulley Bearing**	**MM-4-36**
4-36	Lubrication	MM-4-36

UNCONTROLLED COPY WHEN DOWNLOADED OR PRINTED

Visit www.enstromhelicopter.com for instructions to order an original manual and to register for email notification of updates.

SECTION 4

SERVICING, RECOMMENDED OVERHAULS, INSPECTIONS, AND GENERAL MAINTENANCE

TABLE OF CONTENTS (CONTINUED PAGE MM-4-2)

Paragraph		Page
4-37	**Collective Guidetube Bearing**	**MM-4-37**
4-38	Lubrication	MM-4-37
4-39	**Cyclic Swashplate Bearing**	**MM-4-37**
4-40	Lubrication	MM-4-37
4-41	**Idler Pulley Bearing**	**MM-4-37**
4-42	Lubrication	MM-4-37
4-43	Lubrication, Preferred Method	MM-4-37
4-44	Lubrication, Alternate Method	MM-4-37
4-44.1	**Drive Belt Roller Assembly**	**MM-4-38**
4-44.2	Lubrication	MM-4-38
4-45	**Recommended Overhaul Cycles**	**MM-4-39**
4-46	**Periodic Inspections**	**MM-4-40**
4-47	General Information	MM-4-40
4-48	**Daily Inspection**	**MM-4-40**
4-49	**Periodic Inspection Checklists**	**MM-4-40**
4-50	50 Hour Inspection	MM-4-42
4-51	100 Hour Inspection	MM-4-44
4-52	200 Hour Inspection	MM-4-59
4-53	400 Hour Inspection	MM-4-60
4-54	Special Scheduled Inspection	MM-4-61
4-55	**Special Instructions**	**MM-4-62**
4-56	General Information	MM-4-62
4-57	Main Rotor Blade Strike/Sudden Stoppage (Minor)	MM-4-62
4-58	Main Rotor Blade Strike/Sudden Stoppage (Major)	MM-4-63
4-59	Tail Rotor Blade Strike/Sudden Stoppage	MM-4-64
4-60	Hard Landing	MM-4-65
4-61	Main Rotor Overspeed	MM-4-66
4-62	Main Rotor or Tail Rotor Transmission Chip Indication	MM-4-67
4-63	Engine Overboost	MM-4-69
4-64	Engine Overspeed	MM-4-69
4-65	**Maintenance Ground Run**	**MM-4-69**
4-66	**Ground Handling**	**MM-4-71**
4-67	Ground Handling Wheels	MM-4-71
4-68	**External Power**	**MM-4-72**
4-69	**Parking**	**MM-4-72**
4-70	**Leveling**	**MM-4-72**
4-71	**Hoisting**	**MM-4-73**
4-72	**Cleaning**	**MM-4-73**
4-73	Exterior	MM-4-73
4-74	Interior	MM-4-75
4-75	Plexiglass	MM-4-75

UNCONTROLLED COPY WHEN DOWNLOADED OR PRINTED

Visit www.enstromhelicopter.com for instructions to order an original manual and to register for email notification of updates.

SECTION 4

SERVICING, RECOMMENDED OVERHAULS, INSPECTIONS, AND GENERAL MAINTENANCE

TABLE OF CONTENTS (CONTINUED PAGE MM-4-3)

Paragraph		Page
4-76	**Aircraft Preservation and Storage**	**MM-4-76**
4-77	General	MM-4-76
4-78	Low Usage	MM-4-76
4-79	Storage Up to 45 Days	MM-4-77
4-80	Storage from 45 Days to 6 Months	MM-4-78
4-81	Storage for Longer than 6 Months	MM-4-78
4-82	**Preventive Maintenance for Corrosion Control**	**MM-4-79**
4-83	General Information	MM-4-79
4-84	**Scheduled Field Preventive Maintenance Program**	**MM-4-79**
4-85	**Component Preservation and Storage**	**MM-4-80**
4-86	Main Rotor Transmission	MM-4-80
4-87	Tail Rotor Transmission	MM-4-81
4-88	Main Rotor Blades – Application of Corrosion Prevention Compound	MM-4-81
4-89	General Information	MM-4-81
4-90	Application of CPC	MM-4-82
4-91	Storage of CPC	MM-4-83

UNCONTROLLED COPY WHEN DOWNLOADED OR PRINTED

Visit www.enstromhelicopter.com for instructions to order an original manual and to register for email notification of updates.

INTENTIONALLY LEFT BLANK

UNCONTROLLED COPY WHEN DOWNLOADED OR PRINTED

Visit www.enstromhelicopter.com for instructions to order an original manual and to register for email notification of updates.

4-1 SERVICING

4-2 Description – Servicing

A. Servicing of the F-28/280F series helicopter is normally accomplished at specified hourly intervals. Operators should take into consideration the environmental conditions and determine whether more frequent servicing intervals are necessary. Refer to Tables 4-1 through 4-2 and Figure 4-1 for approved fuels, oils, lubricants, intervals, and locations.

Table 4-1. Index - Fuels, Lubricants, Specification, and Capacities

Code	Nomenclature	Specification	Commercial Description	Notes
C001	Fuel	100/130 Aviation Gasoline 100 Aviation Gasoline 100LL Aviation Gasoline		(1)
C002	Lubricating Oil, Piston Engine	MIL-L-22851/SAE-J1899 MIL-L-6082, SAE-J1966		(2, 3)
C003	Fuel, Emergency Use			
C004	Lubricating Oil, Aircraft Turbine Engine, Synthetic Base	MIL-PRF-7808	American PQ Lubricant 689 Brayco 880 Eastman Chemical ETO 2389 Exxon Turbo Oil 2389 Mobil Avrex S Turbo 256 Mobil RM-201A Mobil RM-184A Stauffer Jet I	
C005	Lubricating Oil, Aircraft Turbine Engine, Synthetic Base	MIL-PRF-23699 STD MIL-PRF-23699 HTS	Aeroshell Turbine Oil 500 Royco Turbine Oil 500 American PQ Lubricant 6700 BPTO 2380 Caltex RPM Jet Engine Oil 5 Castrol 5050 Chevron Jet Engine Oil 5 Eastman Chemical ETO 2380 ExxonMobil MJO II Mobil Jet Oil II Stauffer Jet II (Castrol 205) Turbonycoil 600 Mobil Jet Oil 254 and Mobil Jet Oil 291 (HTS Oil) Royco 560 (HTS Oil) Aeroshell Turbine Oil 560 (HTS Oil) Eastman Chemical ETO 2197 BPTO 2197	

UNCONTROLLED COPY WHEN DOWNLOADED OR PRINTED

Visit www.enstromhelicopter.com for instructions to order an original manual and to register for email notification of updates.

Code	Nomenclature	Specification	Commercial Description	Notes
C006	Lubricant, Gear	MIL-PRF-2105/SAE-J2360 API GL-5	Mobil 1 Synthetic Gear Lubricant LS 75W-90 Mobil Delvac 1 Synthetic Gear Oil 75W-90 Mobilube HD LS 80W-90 Mobilube HD Plus 80W-90 Shell Helix Racing Gear Oil 75W-90 Shell Spirax HD 80W90 Castrol Syntrax Limited Slip 75W-90 (Syntec Gear Oil)	
C007	Lubricant	Silicone Oil/Fluid	SF96-20	
C008	Grease, general purpose	MIL-PRF-81322	Royco 22CF Aeroshell 22 Aeroshell 22CF	(4)
C009	Engine oil			(5)
C010	Hydraulic fluid	MIL-PRF-5606	Aeroshell Fluid 41	
C011	Grease	MIL-G-25537	Aeroshell Grease 14	
C012	Corrosion inhibitor	MIL-PRF-81309, Type II or III	ACF-50, Lear Chemical Research Brand Corrosion X – Aviation, Corrosion Technologies Corporation	
C013	Lubricant		Tri-Flow Lubricant, Tri-Flow Brand	

NOTES

1. Refer to Textron-Lycoming Service Instruction 1070 (latest revision) for fuel recommendations.
2. Refer to Textron-Lycoming Service Instruction 1014 (latest revision) for lubricating oil recommendations and seasonal oil grade recommendations.
3. Textron-Lycoming recommends using the following engine oil for the specified average ambient air temperatures (See Note 2):

Textron-Lycoming Lubricating Oil Recommendations		
Average Ambient Air Temperature	**MIL-L-6082 or SAE-J1966**	**MIL-L-22851 or SAE-J1899**
All temperature		SAE 15W-50 or SAE 20W-50
Above 80°F (27°C)	SAE 60	SAE 60
Above 60°F (16°C)	SAE 50	SAE 40 or SAE 50
30°F to 90°F (-1°C to 32°C)	SAE 40	SAE 40
0°F to 70°F (-18°C to 21°C)	SAE 30	SAE 30, SAE 40, or SAE 20W-40
0°F to 90°F (-18°C to 32°C)	SAE 20W-50	SAE 20W-50 or SAE 15W-50
Below 10°F (-12°C)	SAE 20	SAE 30 or SAE 20W-30

4. Enstrom advises against using Mobilgrease 28 for most components except for the idler pulley bearings. Refer to Table 4-2.
5. Any grade internal combustion engine motor oil.

UNCONTROLLED COPY WHEN DOWNLOADED OR PRINTED

Visit www.enstromhelicopter.com for instructions to order an original manual and to register for email notification of updates.

Table 4-2. Servicing Intervals, Methods, and Locations

System	Location (Note 1)	Consumable Identification	Frequency (Note 8) (hr) 25	50	100	Other	As Required	Capacity	Method
Fuel	A-1	C001					X	42.0 gal (US) (40.0 gal (US) usable) 159.0 L (151.4 L usable)	
Engine Oil	A-3	C002		X			X	10.0 Qt (US) (8.0 U.S Qt (US) Engine Sump) 7.6 L (5.7 L Engine Sump)	Filler Can
Main Rotor Transmission	F-14	C006			X		X	3.0 Qt (US) - Dry 2.75 Qt (US) - Servicing 2.84 L - Dry 2.6 L - Servicing	Filler Can
Overrunning Clutch	G-15	C004, C005			X			As Required	Oil Can
Upper Pulley (Jackstrut) Bearing	G-16 (Note 3)	C008			X (3)			As Required	Grease Gun or Hand Pack
Lower Pulley (Jackstrut) Bearing	H-17	C008, C011		X				As Required	Grease gun
Idler Pulley Bearings	I-18	C008 (Note 9)				X		As Required	Syringe
Idler Pulley Actuator Arm Pivots	I-19	C002			X			As required	Oil Can
Snubber Roller Bearings	J-20	C008		X				As Required	Grease Gun
Drive Belt Clutch Cable	K-21	C008, C011		X				As Required	Grease Gun
Main Rotor Tachometer Drive Bearings	L-22	C008			X			As Required	Grease gun
Tail Rotor Drive Shaft Bearings	M-23	C008, C011	X					As Required	Grease gun
Tail Rotor Transmission	N-25	C006			X		X	5 fl oz (US) .15 L	Oil can Syringe
Tail Rotor Rotating Control Pivots	N-27	C002			X			As required	Oil Can
Tail Rotor Feathering Bearings	N-28	C008, C011	X					As Required	Grease Gun
Tail Rotor Teeter Bearings	N-29 (Note 4)	C008, C011	X					As required	Grease Gun

UNCONTROLLED COPY WHEN DOWNLOADED OR PRINTED

Visit www.enstromhelicopter.com for instructions to order an original manual and to register for email notification of updates.

System	Location (Note 1)	Consumable Identification	Frequency (Note 8) (hr) 25	50	100	Other	As Required	Capacity	Method
Tail Rotor Pitch Control Bearing	N-30	C008			X			As Required	Syringe
Collective Guidetube Bearing	O-31 (Note 3, 6)	C008		X				As required	Grease Gun or Hand Pack
Cyclic Swashplate Bearing	O-32 (Note 3, 7)	C008		X				As required	Grease Gun or Hand Pack
Cyclic Swashplate Control Rod Pivot	O-33	C002		X				As required	Oil Can
Pitch Change Bellcrank Pivot Bearings	P-34	C008, C011		X				As Required	Grease Gun
Pitch Change Bellcrank Inboard Pivot Points	P-35	C002		X				As required	Grease Gun
Main Rotor Blade Grips	P-37 (Note 2)	C008		X				As Required	Grease Gun
Main Rotor Dampers	P-38	C007		X			X	As Required	Tool T-2896
Main Rotor Lead-Lag Bearings	Q-39	C008, C011		X				As Required	Grease Gun
Main Rotor Flapping Bearings	Q-40	C008, C011		X				As Required	Grease Gun
Landing Gear Oleos	R-41	C010			X		X	As required	Filler Can
Ground Handling Wheels	R-42	C008, C011					X	As required	Hand Pack
Battery	S-43					(See Note 5)			
Tail Rotor Pedal Pivot Bushings	T-44/45	C002			X			As required	Oil Can
Cabin Flight Control Bellcrank Bushings	U-46	C002			X			As required	Oil Can
Trim Motor Attachment Points	U-46	C002			X			As required	Oil Can

UNCONTROLLED COPY WHEN DOWNLOADED OR PRINTED

Visit www.enstromhelicopter.com for instructions to order an original manual and to register for email notification of updates.

NOTES

1. Refer to the Figure 4-1 illustrations for the lubrication/servicing locations.
2. Refer to Paragraph 4-28 for lubrication procedure.
3. Hand pack the bearing if the bearing housing is not equipped with a grease fitting.
4. Only applies to 28-150050 and 28-150079 series tail rotor assemblies.
5. Service in accordance with manufacturer's instructions.
6. Also referred to as Upper Swashplate Bearing.
7. Also referred to as Lower Swashplate Bearing.
8. Refer to Paragraph 4-49 for additional guidance pertaining to servicing frequency.
9. Lubricate the idler pulley bearings if experiencing RFI/EMI in the COM system.

UNCONTROLLED COPY WHEN DOWNLOADED OR PRINTED

Visit www.enstromhelicopter.com for instructions to order an original manual and to register for email notification of updates.

Table 4-3. Qualified Domestic Commercial Oils for MIL-PRF-7808

NOTE: Content previously contained in Table 4-3 has been incorporated into Table 4-1.

Table 4-4. Qualified Domestic Commercial Oils for MIL-PRF-23699

NOTE: Content previously contained in Table 4-4 has been incorporated into Table 4-1.

Table 4-5. Qualified Domestic Commercial Oils for SAE-J2360/API GL-5/MIL-PRF-2105

NOTE: Content previously contained in Table 4-5 has been incorporated into Table 4-1.

Table 4-6. Qualified Domestic Commercial Greases for MIL-G-25537

NOTE: Content previously contained in Table 4-6 has been incorporated into Table 4-1.

Table 4-7. Qualified Domestic Commercial Greases for MIL-PRF-81322

NOTE: Content previously contained in Table 4-7 has been incorporated into Table 4-1.

Table 4-8. Qualified Domestic Commercial Greases for MIL-PRF-23827

NOTE: Content previously contained in Table 4-8 has been incorporated into Table 4-1.

UNCONTROLLED COPY WHEN DOWNLOADED OR PRINTED

Visit www.enstromhelicopter.com for instructions to order an original manual and to register for email notification of updates.



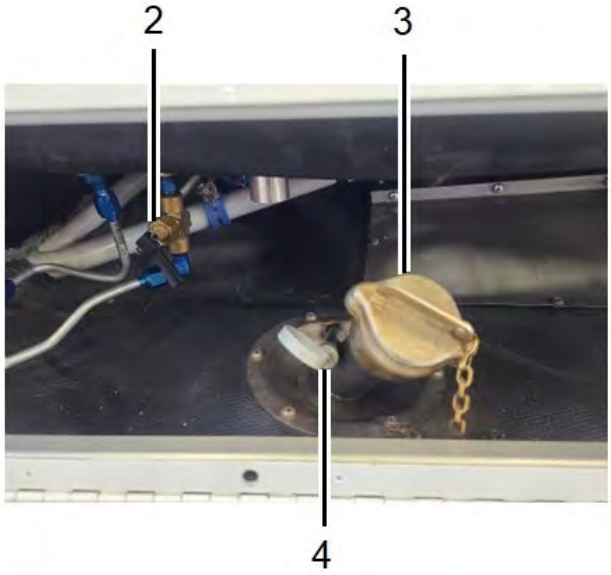

View A

1. Fuel Tanks (2 places)
2. Fuel Tank Sump Drain (2 places)
3. Engine Oil Filler
4. Engine Oil Dipstick

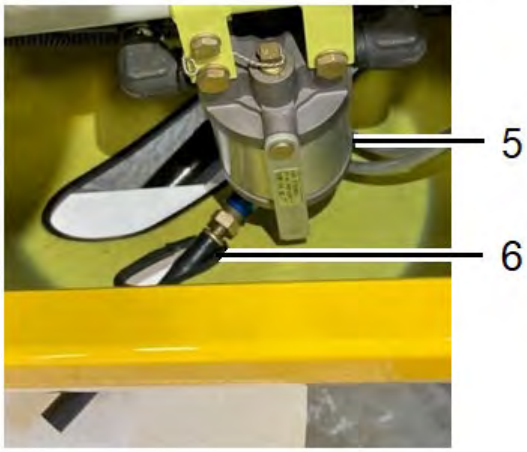

View B

5. Main Fuel Filter (P/N 33-199-916)
6. Main Fuel Filter Drain

Sheet 1 of 12

Figure 4-1. Servicing Locations

UNCONTROLLED COPY WHEN DOWNLOADED OR PRINTED

Visit www.enstromhelicopter.com for instructions to order an original manual and to register for email notification of updates.



View C

7. Engine Oil Filter

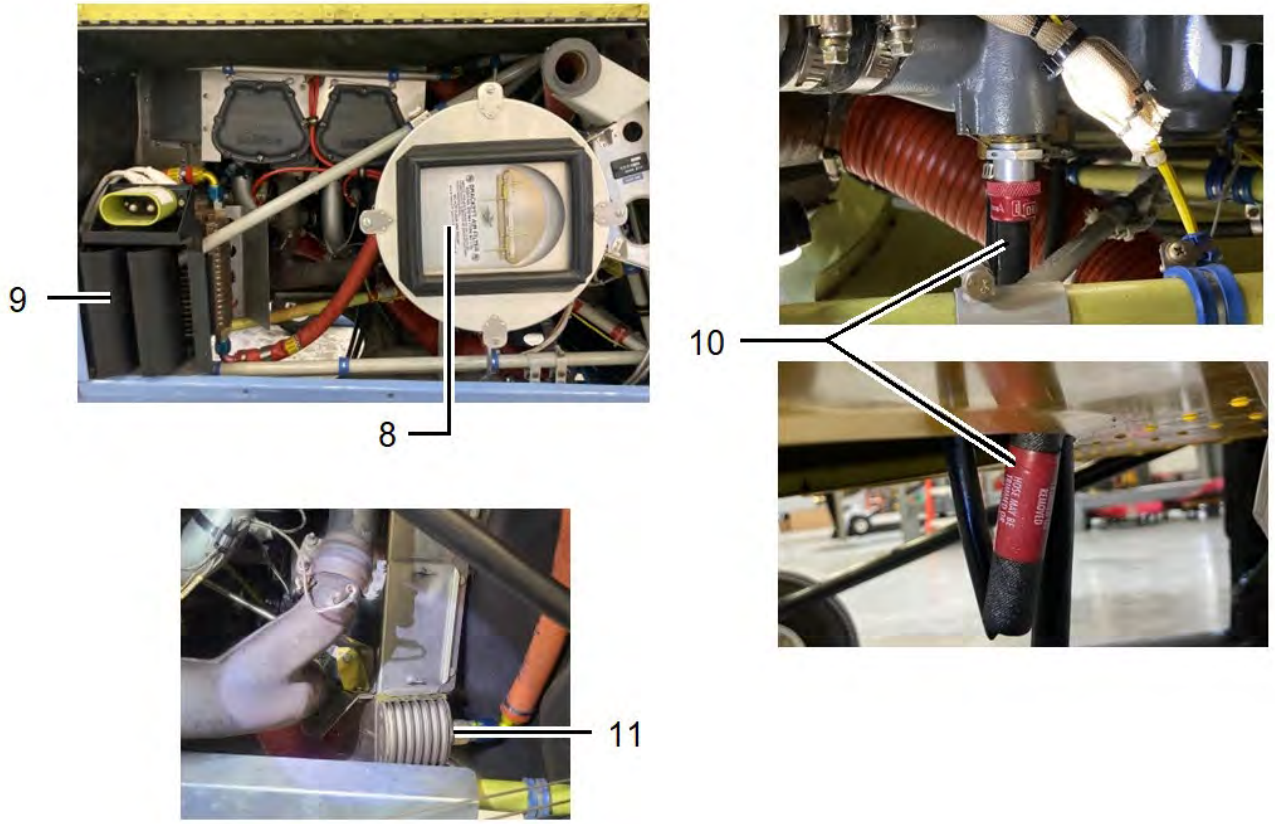

View D

8. Engine Air Filter
9. Engine Main Oil Cooler
10. Engine Oil Sump Drain
11. Aux. Engine Oil Cooler

Figure 4-1. Servicing Locations

UNCONTROLLED COPY WHEN DOWNLOADED OR PRINTED

Visit www.enstromhelicopter.com for instructions to order an original manual and to register for email notification of updates.

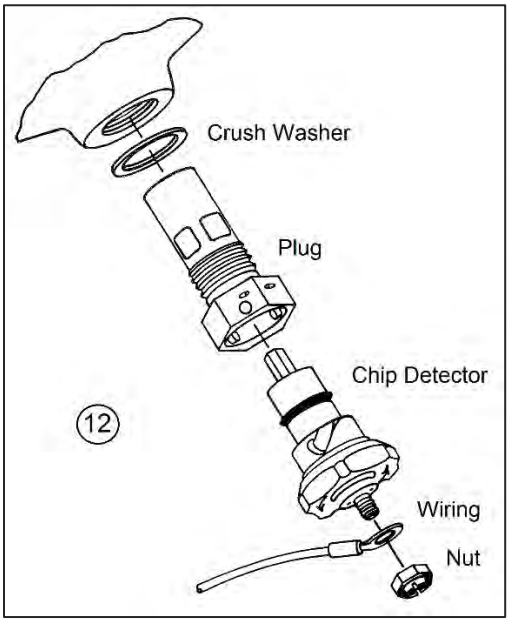

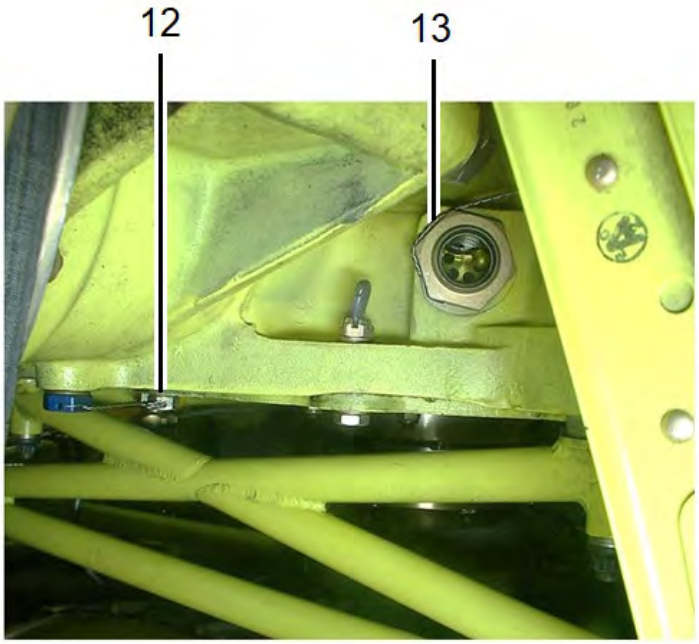

View E

12. Main Rotor Gearbox Plug and Magnetic Chip Detector
13. Main Rotor Gearbox Oil Level Sight Gauge

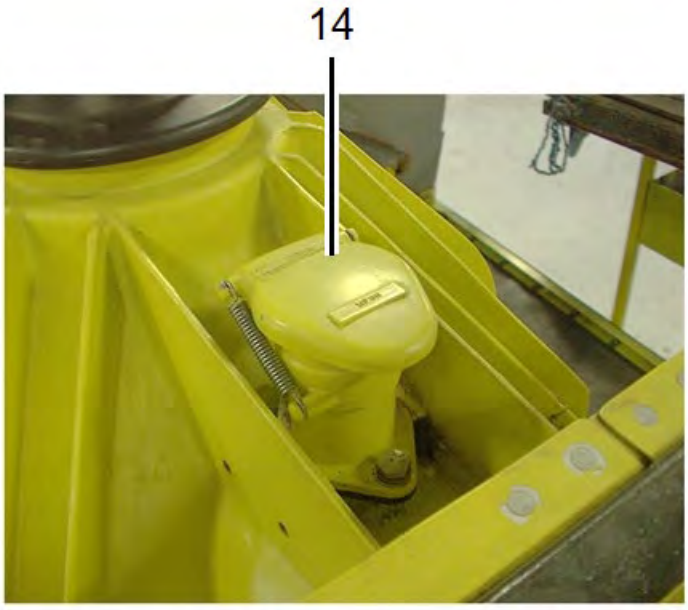

View F

14. Main Rotor Gearbox Filler and Screen

Figure 4-1. Servicing Locations

UNCONTROLLED COPY WHEN DOWNLOADED OR PRINTED

Visit www.enstromhelicopter.com for instructions to order an original manual and to register for email notification of updates.

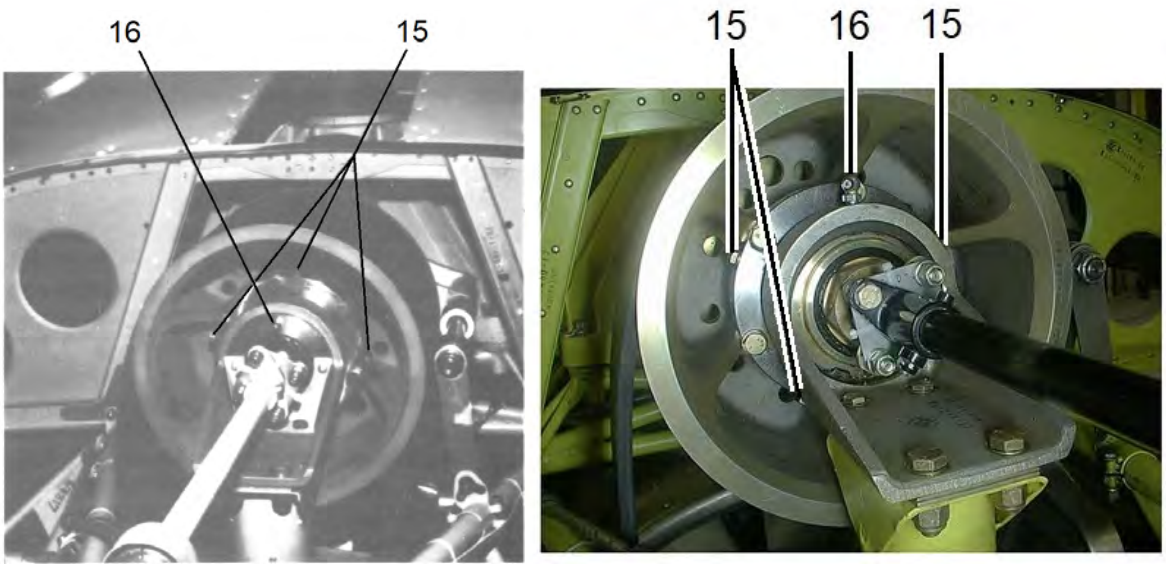

View G

15. Main Rotor Gearbox Overrunning Clutch Drain and Filler Plugs
16. Upper Jackstrut Bearing Grease Fitting (early housing to the left; current housing to the right)

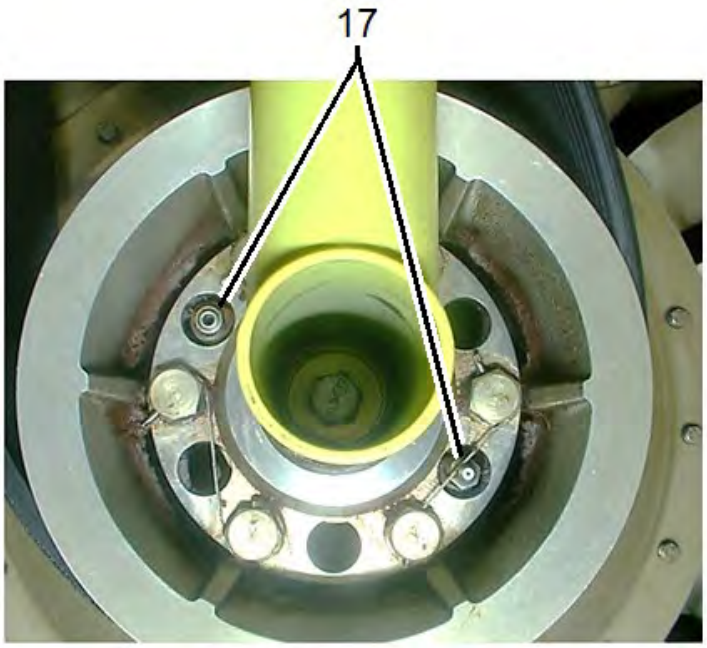

View H

17. Lower Jackstrut Bearing Grease Fitting and Purge Plug

Figure 4-1. Servicing Locations

UNCONTROLLED COPY WHEN DOWNLOADED OR PRINTED

Visit www.enstromhelicopter.com for instructions to order an original manual and to register for email notification of updates.

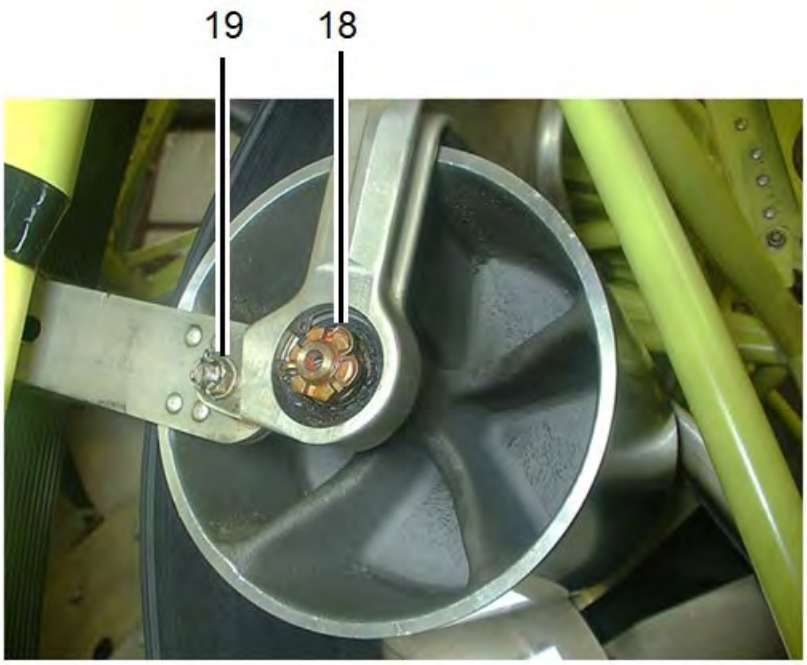

View I

18. Idler Pulley Bearings (2 places)
19. Idler Actuator Arm Assembly Bushings (hidden, 2 places)

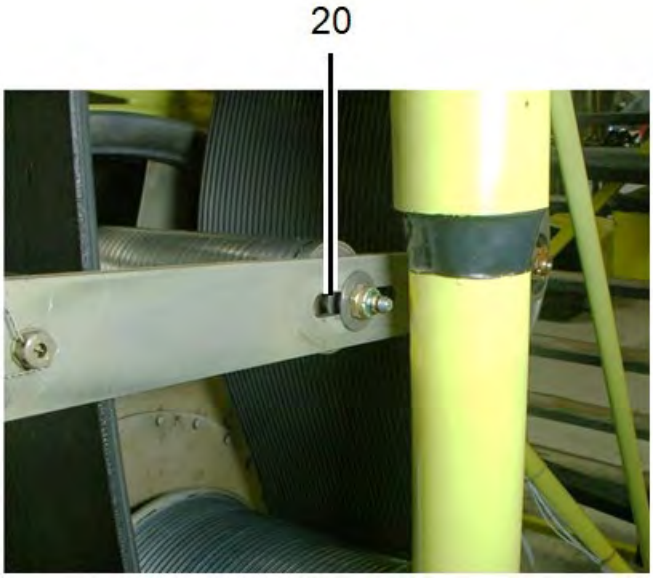

View J

20. Drive Belt Snubber Roller Bearings

Figure 4-1. Servicing Locations

UNCONTROLLED COPY WHEN DOWNLOADED OR PRINTED

Visit www.enstromhelicopter.com for instructions to order an original manual and to register for email notification of updates.

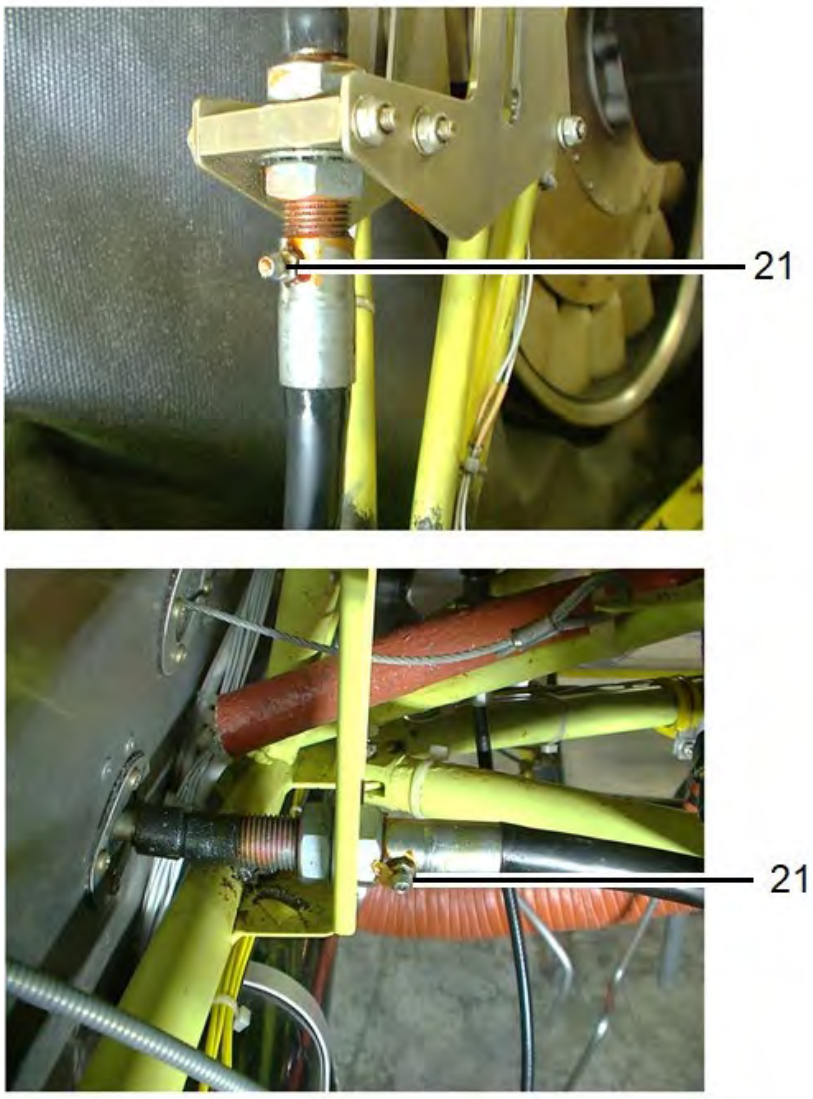

View K

21. Drive Belt Clutch Engagement Cable Grease Fitting (2 places: Aft, top photo; Forward, bottom photo)

Figure 4-1. Servicing Locations

UNCONTROLLED COPY WHEN DOWNLOADED OR PRINTED

Visit www.enstromhelicopter.com for instructions to order an original manual and to register for email notification of updates.

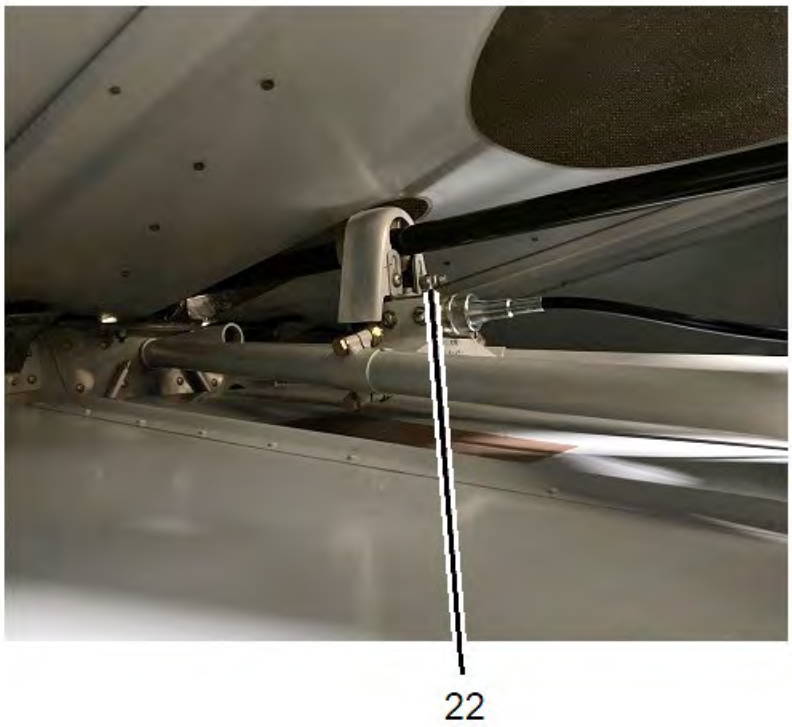

View L

22. Rotor Tach Drive Grease Fitting



View M

23. Tail Rotor Drive Shaft Bearings (5 places)

Figure 4-1. Servicing Locations

UNCONTROLLED COPY WHEN DOWNLOADED OR PRINTED

Visit www.enstromhelicopter.com for instructions to order an original manual and to register for email notification of updates.

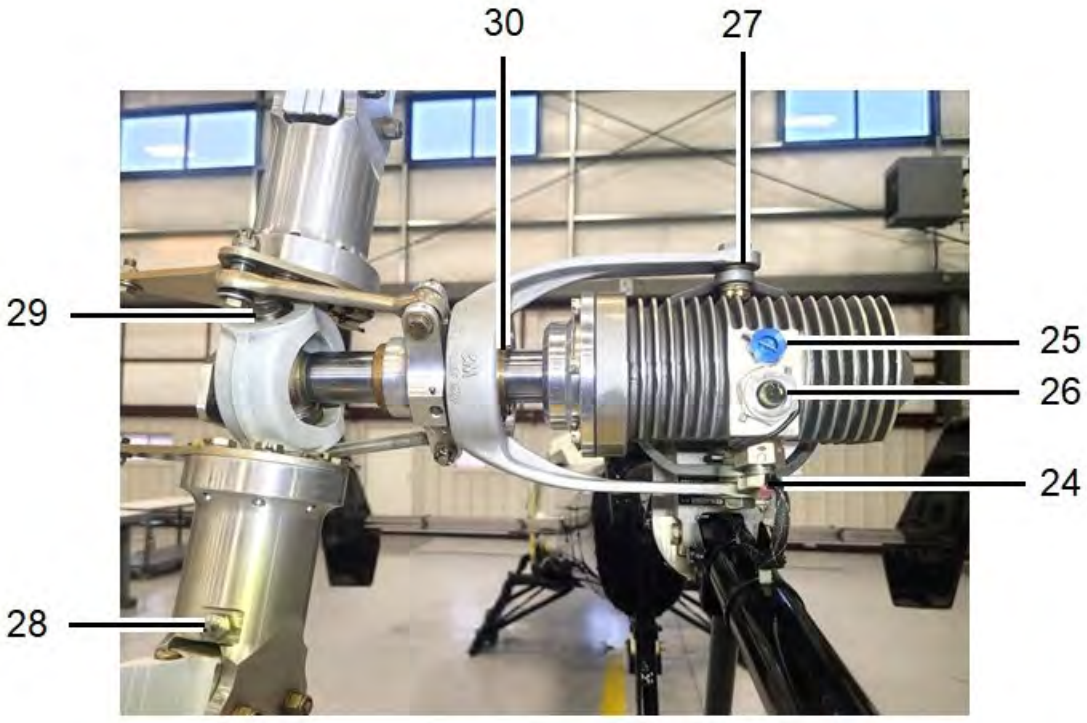

View N

24. Tail Rotor Gearbox Drain and Magnetic Particle Plug
25. Tail Rotor Gearbox Filler Plug
26. Tail Rotor Gearbox Sight Gauge
27. Tail Rotor Control Yoke Pivot Points (4 places)
28. Tail Rotor Feathering Bearings (2 places)
29. Tail Rotor Teetering Bearings (2 places)
30. Tail Rotor Pitch Change Bearing

Figure 4-1. Servicing Locations

UNCONTROLLED COPY WHEN DOWNLOADED OR PRINTED

Visit www.enstromhelicopter.com for instructions to order an original manual and to register for email notification of updates.

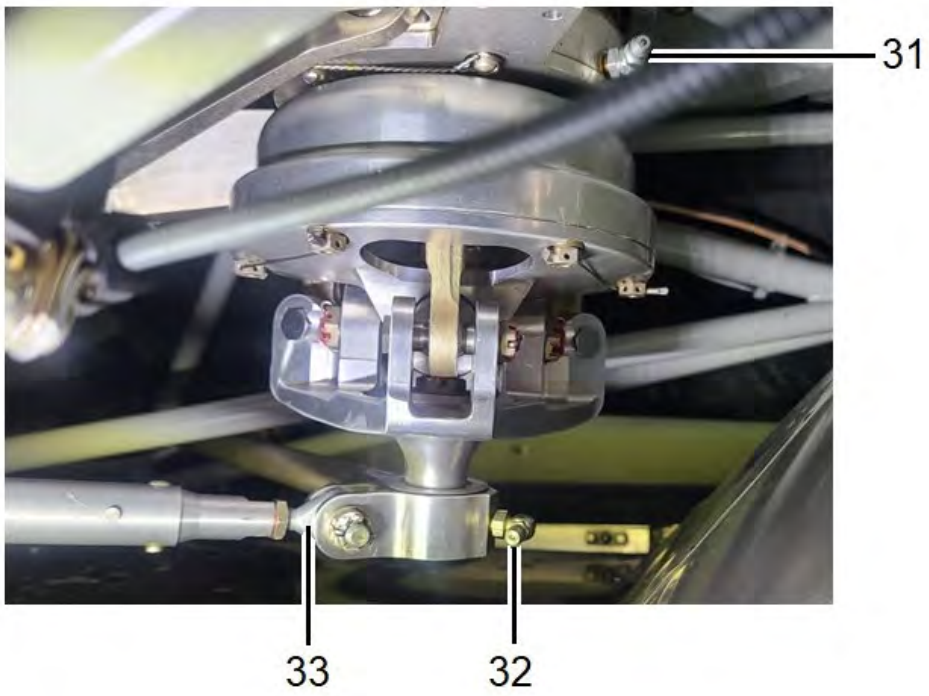

View O

31. Collective Guidetube Bearing Grease Fitting
32. Cyclic Swashplate Bearing Grease Fitting
33. Cyclic Swashplate Control Rod Pivots

Figure 4-1. Servicing Locations

UNCONTROLLED COPY WHEN DOWNLOADED OR PRINTED

Visit www.enstromhelicopter.com for instructions to order an original manual and to register for email notification of updates.

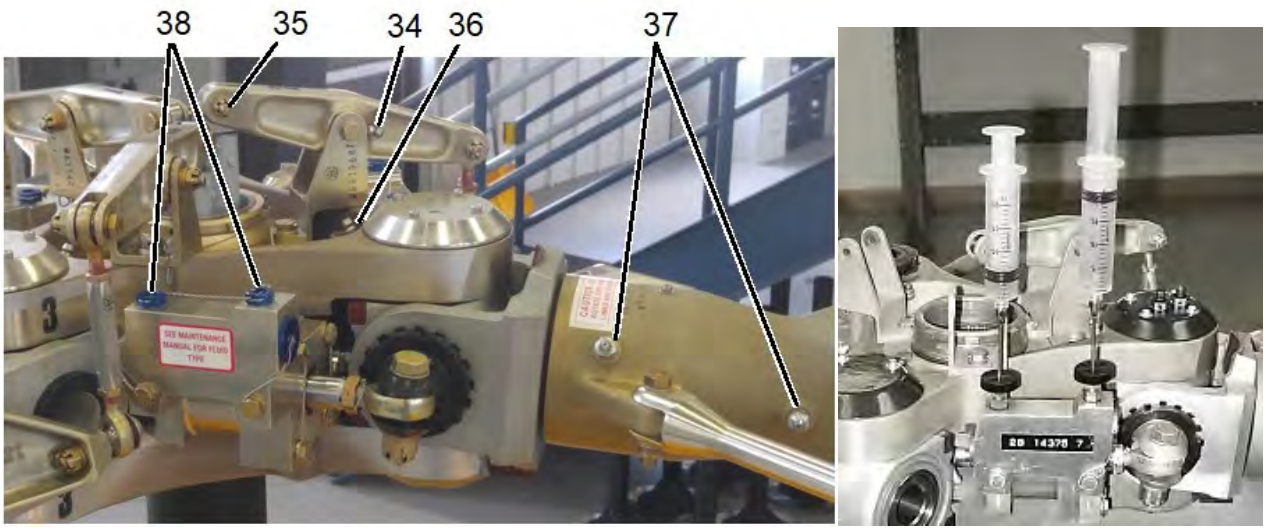

View P

(Servicing the dampers using Tool T-2896 is shown in the photo to the right.)

34. Pitch Change Bellcrank Pivot Bearings (3 places)
35. Pitch Change Bellcrank Inboard Pivot Points (3 places)
36. Main Rotor Lead/Lag Bearings (3 places)
37. Main Rotor Feathering Bearings (6 places)
38. Main Rotor Damper Service Plugs

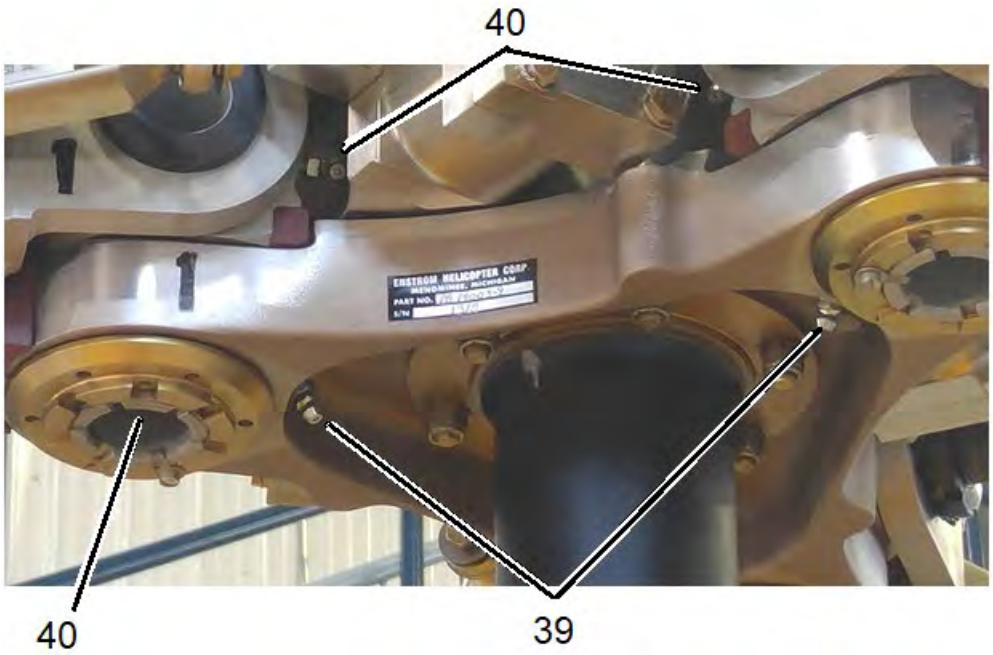

View Q

39. Main Rotor Lead/Lag Bearings (3 places)
40. Main Rotor Flapping Bearings (9 places)

Figure 4-1. Servicing Locations

UNCONTROLLED COPY WHEN DOWNLOADED OR PRINTED

Visit www.enstromhelicopter.com for instructions to order an original manual and to register for email notification of updates.



View R

41. Landing Gear Oleo Service Point
42. Ground Handling Wheel Bearing

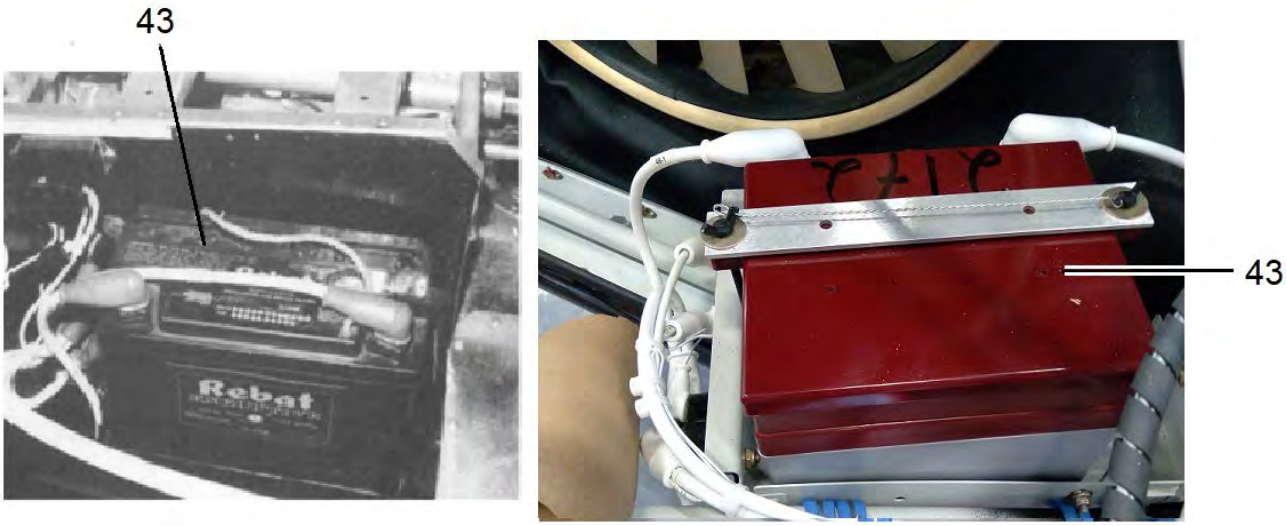

View S

43. Battery Servicing Points (Forward, left photo, or aft, right photo, installation)

Figure 4-1. Servicing Locations

UNCONTROLLED COPY WHEN DOWNLOADED OR PRINTED

Visit www.enstromhelicopter.com for instructions to order an original manual and to register for email notification of updates.

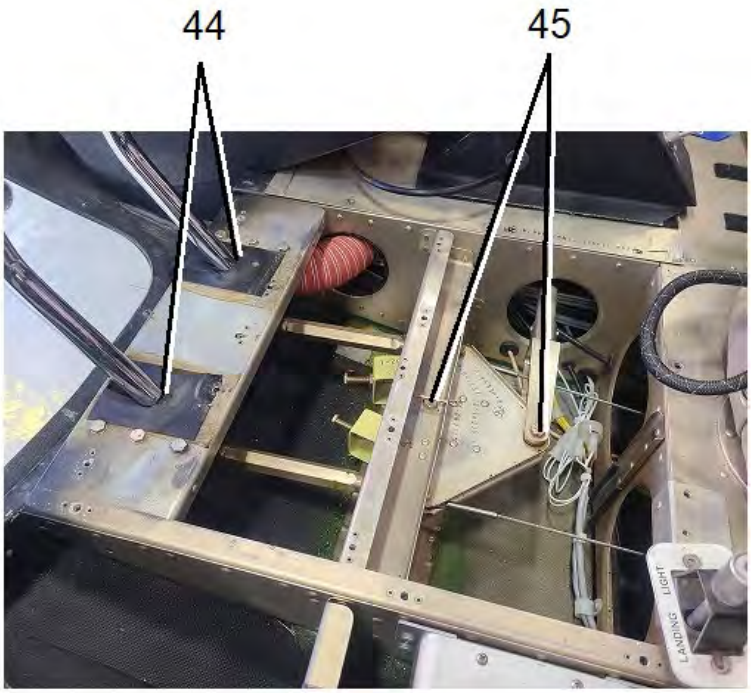

View T

44. Tail Rotor Pedals Lubricating Points (4 places)
45. Tail Rotor Control Bushings (4 places)

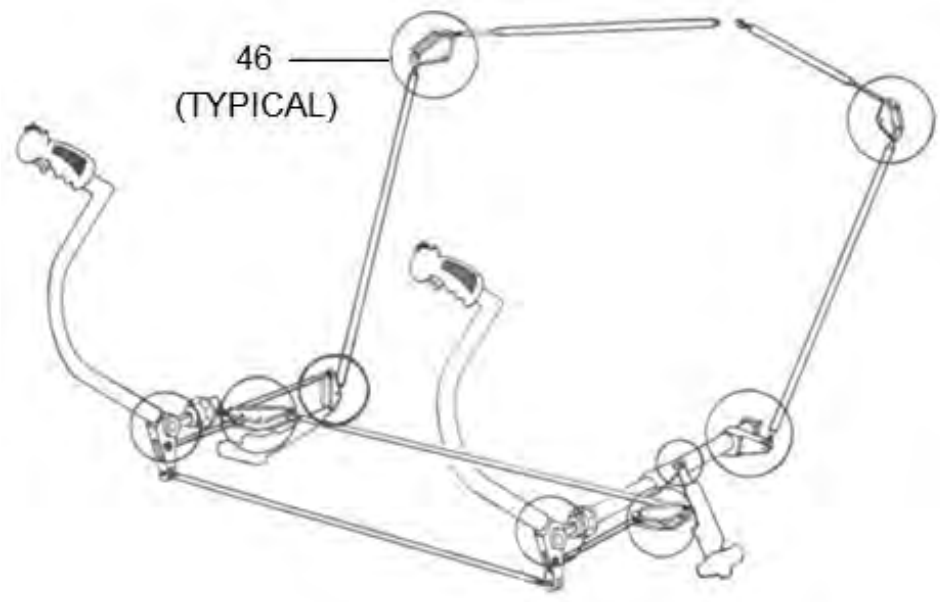

View U

46. Cabin Flight Control Bellcrank Pivot Bushings (16 places)

Figure 4-1. Servicing Locations

UNCONTROLLED COPY WHEN DOWNLOADED OR PRINTED

Visit www.enstromhelicopter.com for instructions to order an original manual and to register for email notification of updates.

4-3 FUEL SYSTEM

4-4 Servicing – Fuel System

NOTE: Refer to Figure 4-1, View A and View B.

NOTE: Refer to Table 4-1 for system capacity and approved fuels.

WARNING: IN THE EVENT OF A MAJOR SPILLAGE OF FUEL, ALL POWERED EQUIPMENT MUST BE SHUT DOWN. ALL PERSONNEL SHOULD LEAVE THE VICINITY AND BE POSITIONED TO PREVENT ANY SOURCES OF POSSIBLE IGNITION FROM ENTERING THE AREA. THE APPROPRIATE AUTHORITIES SHOULD BE NOTIFIED TO CONTAIN AND DISPERSE THE SPILL.

A. Attach fuel truck or refueling equipment ground wire to landing gear skids.

CAUTION: TAKE CARE NOT TO BEND FIBERGLASS FUEL TANKS BY NOT ALLOWING NOZZLE TO BEND FILLER NECK.

CAUTION: IF FUELING FROM DRUMS OR ANY QUESTIONABLE SOURCE OF SUPPLY, A CLEAN FUNNEL AND A SCREEN OR FILTER SHOULD BE USED TO REMOVE ANY FOREIGN MATERIALS.

B. Remove fuel cap from one of the fuel tanks and insert fuel nozzle.

NOTE: When aircraft engine is hot, service right tank first.

C. Service fuel tank as required.

D. Remove fuel nozzle and install fuel cap.

E. Remove fuel cap from opposite tank and insert fuel nozzle.

F. Service fuel tank as required.

G. Remove fuel nozzle and install fuel cap.

NOTE: Because of cross-feeding, which occurs during refueling, it may be necessary to add fuel to the first fuel tank refueled to obtain the required fuel quantity.

H. Remove ground wire.

UNCONTROLLED COPY WHEN DOWNLOADED OR PRINTED

Visit www.enstromhelicopter.com for instructions to order an original manual and to register for email notification of updates.

4-5 Draining – Fuel System

WARNING: IN THE EVENT OF A MAJOR SPILLAGE OF FUEL, ALL POWERED EQUIPMENT MUST BE SHUT DOWN. ALL PERSONNEL SHOULD LEAVE THE VICINITY AND BE POSITIONED TO PREVENT ANY SOURCES OF POSSIBLE IGNITION FROM ENTERING THE AREA. THE APPROPRIATE AUTHORITIES SHOULD BE NOTIFIED TO CONTAIN AND DISPERSE THE SPILL.

A. Open filler cap on right fuel tank.

B. Remove fuel from fuel tanks using suitable pump or siphon and containers.

C. Drain remaining fuel from tanks and lines into suitable containers using tank sump drain valves and gascolator drain valve.

D. Reinstall filler cap on right fuel tank.

4-5.1 Servicing – Fuel Filter Screen

WARNING: SHUT OFF FUEL BEFORE DISASSEMBLY AND SERVICING OF THE FUEL FILTER.

A. Shut off fuel.

B. Drain residual fuel from filter (strainer).

C. Disassemble fuel filter (Para. 13-10, E, (2)).

D. Inspect fuel filter screen (Para. 13-10, E, (3), (b)).

E. Clean fuel filter assembly.

(1) Clean all filter housing parts with solvent.

NOTE: Pay particular attention to fittings and passageways within the housing body.

(2) Clean interior and exterior surfaces of filter housing with solvent using a fine bristle brush.

CAUTION: DAMAGE TO THE SCREEN CAN OCCUR IF EXCESSIVE FORCE IS USED DURING CLEANING.

(3) Immerse screen in solvent (Naptha or Toluene) for approximately 10 minutes. Use a fine bristle brush to removal of debris.

(4) Dry screen thoroughly with filtered, compressed air.

F. Assemble fuel filter assembly (Para. 13-10, E, (5)).

UNCONTROLLED COPY WHEN DOWNLOADED OR PRINTED

Visit www.enstromhelicopter.com for instructions to order an original manual and to register for email notification of updates.

4-6 ENGINE OIL SYSTEM

NOTE: Refer to Figure 4-1, View C and View D.

4-7 Servicing – Engine Oil System

NOTE: Refer to Table 4-1 for system capacity and approved oils.

A. Visually check oil level on dip stick.

B. Remove filler cap from fill tube.

C. Add oil as required to bring oil level to the 8 quart mark.

NOTE: Normal operating oil level is between 6 and 8 quarts.

D. Secure dip stick and filler cap.

E. If servicing after draining the engine oil system, ground run engine in accordance with applicable rotorcraft flight manual/pilots operating manual. After ground run, check oil level and service as required.

UNCONTROLLED COPY WHEN DOWNLOADED OR PRINTED

Visit www.enstromhelicopter.com for instructions to order an original manual and to register for email notification of updates.

4-8 Draining – Engine Oil System

A. Place a suitable container under drain plug in bottom of engine sump.

B. Remove drain plug or open drain valve and allow oil to drain sump.

C. Reinstall drain plug and safety wire or close drain valve after draining the oil.

D. Place a suitable container under lower oil line connection of engine oil cooler.

E. Disconnect oil line from cooler and drain oil from oil cooler and line.

F. Reconnect oil line.

G. If helicopter is equipped with an auxiliary engine oil cooler, place a suitable container under oil cooler.

H. Disconnect oil line from oil cooler and drain oil from the cooler and oil line.

I. Reconnect oil line.

4-9 OVERRUNNING CLUTCH

NOTE: Refer to Figure 4-1, View G.

4-10 Servicing – Overrunning Clutch

NOTE: Refer to Table 4-1 for system capacity and approved oil. An alternate servicing procedure is described in Step F.

A. Rotate upper pulley/overrunning clutch until the service plugs in clutch are in the horizontal and vertical positions.

B. Continue to rotate upper pulley/overrunning clutch until one of the horizontal filler plugs is slightly above horizontal.

C. Remove filler plugs that are in the above horizontal and beyond vertical positions.

D. Slowly rotate upper pulley/overrunning clutch so that the open filler ports move toward the horizontal and vertical position.

E. The overrunning clutch is properly serviced when oil starts to drain from the open filler port as the port reaches the horizontal position.

F. Add oil to the overrunning clutch until oil starts to drain from the filler port in the horizontal position.

NOTE: Because of the location of the filler passage, it is possible for the filler port to be partially blocked by the clutch sprags. If the filler port is partially blocked, the clutch will take oil very slowly.

UNCONTROLLED COPY WHEN DOWNLOADED OR PRINTED

Visit www.enstromhelicopter.com for instructions to order an original manual and to register for email notification of updates.

G. Alternate Method:

(1) Obtain a ¼-28 right angle Zerk fitting, unscrew the end off, and discard ball and spring.

(2) Perform Steps A and B. Install the modified Zerk fitting in the top hole.

(3) Using a suitable oil pump or syringe, push oil into the clutch until the oil runs clear from the side plug hole.

H. Reinstall filler plugs and wipe up excess oil.

4-11 MAIN ROTOR TRANSMISSION

NOTE: Refer to Figure 4-1, View E and View F.

4-12 Servicing – Main Rotor Transmission

NOTE: Refer to Table 4-1 for system capacity and approved oils.

NOTE: Check the transmission for leaking seals if servicing is required between periodic inspections.

The main transmission oil level is checked by a sight gauge located on the right aft side of the transmission. The sight gauge is visible through the top step in the step access panel on the right side of the helicopter. (On older helicopters, the sight gauge is visible through an access panel in the baggage compartment.) With the helicopter in a relatively level position, the oil level should be at or near the halfway level in the sight gauge. If oil is visible, no additional oil is required. If oil is not visible, add oil until the oil level is halfway up the sight gauge.

A. Servicing the main rotor transmission.

(1) Open cover on transmission filler port.

(2) Add oil as required.

(3) Close cover on transmission filler port.

4-13 Draining – Main Rotor Transmission

A. Remove access panel located below left side fuel tank.

B. Place a trough under chip detector/magnetic plug located by aft left side transmission mount. Use a suitable container to collect oil.

C. If equipped with a chip detector, remove chip detector from the quick disconnect receptacle.

NOTE: Tool T-0198-11 may be inserted in the base of the chip detector to drain the oil.

D. Remove quick disconnect receptacle/magnetic plug from transmission to drain the oil.

E. When transmission is drained, replace crush washer on receptacle/magnetic plug.

UNCONTROLLED COPY WHEN DOWNLOADED OR PRINTED

Visit www.enstromhelicopter.com for instructions to order an original manual and to register for email notification of updates.

F. Reinstall receptacle/magnetic plug finger tight. Tighten an additional 90° and lockwire (MS20995C32) receptacle/magnetic plug.

G. If equipped with chip detector, reinstall chip detector.

4-13.1 Flushing – Main Rotor Transmission

A. Lower ground handling wheels (Para. 4-67, B).

(1) Set 1.5 inch (4 cm) wood blocks under the forward skid shoes and raise the left side ground handling wheel (Para. 4-67, C).

B. Remove left side upper access panel.

C. Drain transmission oil (Para. 4-13).

D. Remove filler cap and tube assembly.

E. Inspect transmission gears.

(1) Using a bright light source, inspect ring and pinion gear teeth for cracks, any pitting, any spalling (frosting), or hard wear lines. Turn the transmission by turning the upper pulley or the tail rotor.

F. Use a syphon sprayer with kerosene, mineral spirits, or equivalent oil-based solvent to spray the interior of the gearbox. Direct the aim of the sprayer around the inside of the gearbox and the ring gear and carrier while turning the gearbox.

(1) Use a sufficient volume of solvent to thoroughly flush out any debris.

G. Allow transmission to drain completely.

H. Loosely install magnetic drain plug or chip detector, as applicable.

I. Add 4 quarts of gear lube currently used in the gearbox (ref. Table 4-1).

J. Manually rotate main rotor hub to spin gearbox 7-10 revolutions.

K. Remove magnetic plug/chip detector and drain gearbox.

L Collect oil to inspect for contamination.

M. Repeat the flushing procedure until it drains free of contamination.

N. Inspect and clean magnetic drain plug or chip detector, if installed.

UNCONTROLLED COPY WHEN DOWNLOADED OR PRINTED

Visit www.enstromhelicopter.com for instructions to order an original manual and to register for email notification of updates.

O. Install receptacle/magnetic plug finger tight. Tighten an additional 90° and lockwire (MS20995C32) receptacle/magnetic plug.

P. Install and secure the filter cap and tube assembly using a new P/N 28-13107-13 gasket.

Q. Torque the bolts to 50-70 in-lb/5.6-7.9 Nm.

R. Service the gearbox (Para. 4-12).

S. Remove blocks from under forward skids and position ground handling wheels, as desired.

T. Install left side upper access panel.

4-14 TAIL ROTOR TRANSMISSION

NOTE: Refer to Figure 4-1, View N.

4-14.1 Oil Level Check – Tail Rotor Transmission

A. Check oil level by using the sight glass located in the aft side of the tail rotor gearbox.

NOTE: The tailcone of the helicopter should be approximately level when servicing the tail rotor gearbox.

NOTE: The sight glass should be transparent and free of any bubbles for the oil level check.

(1) If the sight glass is dirty, opaque, or cloudy:

(a) Drain the oil from the gearbox.

(b) Remove and clean the sight glass.

(c) Reinstall the sight glass (torque 60 in-lb/6.8 Nm).

(d) Service the gearbox (Para. 4-15).

(2) If bubbles are present in the sight glass, raise and lower the tail to change the attitude of the helicopter to clear any bubbles from the sight glass.

(3) The minimum required oil level is when the oil fills half the sight glass.

(a) If the oil level fills half or more than half of the sight glass, the gearbox is adequately filled for operation.

(b) If the oil level fills less than half of the sight glass, proceed to Para. 4-15 to service the gearbox.

4-15 Servicing – Tail Rotor Transmission

NOTE: The tailcone of the helicopter should be approximately level when servicing the tail rotor gearbox.

NOTE: The capacity of the tail rotor gearbox is 5 US fl oz (0.15 L). It may require less than 5 US fl oz (0.15 L) to service the gearbox because the oil might not drain completely. A small amount of residual oil remaining in the gearbox is not a cause for concern.

UNCONTROLLED COPY WHEN DOWNLOADED OR PRINTED

Visit www.enstromhelicopter.com for instructions to order an original manual and to register for email notification of updates.

A. Remove the filler port located directly above sight glass.

B. Add oil until the oil begins to flow from the filler port.

NOTE: The sight glass should be free of any air bubbles.

C. Install a new O-ring (MS28778-2).

D. Install the filler plug (torque 20 in-lb/2.3 Nm).

E. Lockwire (MS20995C32) the filler plug to the magnetic plug/chip detector and the sight glass.

4-16 Draining – Tail Rotor Transmission

NOTE: Draining the tail rotor gearbox is required for the 100 hour/annual inspection, gearbox flushing, and when returning the helicopter to service after a six-month or longer storage period.

A. If equipped with a chip detector, remove chip detector from the quick disconnect receptacle.

B. Place a suitable container under receptacle/magnetic plug.

C. Remove quick disconnect receptacle/magnetic plug and drain transmission.

D. When transmission is drained, replace the crush washer and reinstall the magnetic plug/chip detector.

(1) Tighten magnetic plug/chip detector until turning surfaces are in contact, then tighten an additional 135° (not to exceed 35 in-lb/4 Nm).

(2) Lockwire (MS20995C32) receptacle/magnetic plug to sight glass and filler plug after transmission has been serviced (Para. 4-15).

4-16.1 Flushing – Tail Rotor Transmission

A. Drain oil (Para. 4-16, Steps A through C only).

B. Remove filler plug, sight glass, and top visual inspection plug (if not already removed) from gearbox.

C. Inspect gears closely for cracked or missing teeth and the gearbox for damage.

D. Use a syphon sprayer with kerosene, mineral spirits, or equivalent oil-based solvent to spray down interior of gearbox and flush any debris out of gearbox.

E. Direct aim sprayer around inside of gearbox to flush the input and output bearings, while rotating gearbox.

F. Loosely install bottom drain plug, sight glass, and fill plug.

G. Add one-half quart of the gear lube that is currently used in the gearbox (Table 4-1).

H. Rotate gears at least ten times to circulate oil.

I. Place a container covered with a clean, white cloth or filter under the drain plug.

UNCONTROLLED COPY WHEN DOWNLOADED OR PRINTED

Visit www.enstromhelicopter.com for instructions to order an original manual and to register for email notification of updates.

J. Remove drain plug and drain oil into container while rotating the gears.

K. Allow gearbox to drain completely.

L. Inspect cloth for contamination. If there is contamination, repeat Steps D through L using a new cloth or filter each time the gearbox is drained. Proceed to step M if there is no contamination.

M. Replace O-ring (MS28778-2) and install sight glass. Tighten to 60 in-lb/6.8 Nm.

N. Apply lubricant (MIL-PRF-2105) to the threads the chip detector.

O. Replace crush washer and install the bottom magnetic plug/chip detector. Tighten until turning surfaces contact, then tighten an additional 135° (not to exceed 35 in-lb/4 Nm).

P. Service the gearbox (Para. 4-15).

Q. Lockwire (MS20995C32) receptacle/magnetic plug to sight glass and filler plug after transmission has been serviced (Para. 4-15).

4-17 MAIN ROTOR DAMPERS

NOTE: Refer to Figure 4-1, View P.

4-18 Servicing (Bleeding) – Main Rotor Dampers

NOTE: Refer to Table 4-1 for system capacity and approved oil.

NOTE: Dampers may be serviced whether installed or removed from the aircraft.

A. Servicing the dampers with tools T-2896 (Figure 4-1, View P, right):

(1) Fill tools approximately half full with L-45 Silicone Oil.

(2) Remove reservoir plugs and replace the O-rings as required.

(3) Install tools into reservoir.

(4) Depress one plunger only until bubbles stop entering the other syringe.

(5) Cycle second syringe until plunger is almost at the bottom.

(6) Slowly cycle plungers until all air bubbles are purged from damper.

(7) Remove tool from “lower” port of reservoir and install plug.

(8) Remove tool from “upper” port of reservoir and completely fill reservoir before installing plug.

UNCONTROLLED COPY WHEN DOWNLOADED OR PRINTED

Visit www.enstromhelicopter.com for instructions to order an original manual and to register for email notification of updates.

(9) Tighten and lockwire (.025) the plugs (20 in-lb/2.3 Nm).

B. Alternate method of servicing the dampers:

NOTE: Do not cycle the blades back and forth during this procedure as it will mix any air that is in the reservoirs and distribute it through the damper.

(1) **Slowly** cycle the three blades in one direction until damper piston is fully compressed.

(2) Remove all of caps from reservoirs and fill reservoirs to the top of port. Reinstall caps.

(3) **Slowly** cycle the three blades in the other direction until damper piston is fully extended.

(4) Remove all caps from the reservoirs and fill reservoirs to the top of the port. Reinstall caps.

(5) Perform this procedure three times or until reservoirs show full when caps are removed.

(6) Replace the plug O-rings as required.

(7) Install reservoir plugs and lockwire (.025).

4-19 OLEOS

NOTE: Refer to Figure 4-1, View R.

4-20 Servicing – Oleos

Check the serviceability of the oleos by rocking the aircraft to distribute the weight of the aircraft evenly. The oleos are serviceable if 0.75-1.75 in/19-51 mm of the chromed piston extends past the seal retainer. When protective boots are installed, measure from upper flange of piston assembly to the lower flange on the seal housing assembly; proper length is 8-9 in/20.3-22.9 cm.

On 280FX models with the oleo fairings installed, use the back side of the fuel quantity dip stick, P/N 28-12478-11, to determine if the oleos are properly serviced.

NOTE: If the oleos are not installed on the aircraft or the aircraft is jacked or hoisted off the ground, pressurize the forward and aft oleos to 400 psi.

NOTE: In some circumstances, individual oleo pressures may have to be adjusted to compensate for differences between individual helicopters and environmental factors.

NOTE: The oleo struts should be serviced as pairs such that either both front or both aft oleos are serviced at the same time.

NOTE: The use of nitrogen is recommended for servicing, as it has no moisture content.

A. Service oleos as follows:

(1) (280FX) Remove screws securing lower end of flex boot to oleo fairing, and lift flex boot to gain access to oleo valve.

(2) Sling or hoist helicopter.

UNCONTROLLED COPY WHEN DOWNLOADED OR PRINTED

Visit www.enstromhelicopter.com for instructions to order an original manual and to register for email notification of updates.

(a) An alternative method to sling or hoisting is to use a bottle jack placed under the outboard vertical bolt that secures the end cap to the cross tube.

(4) Remove valve cap and connect servicing equipment pressure line to the oleo valve.

(5) Set nitrogen tank regulator pressure to 400 psi for the forward and aft oleos.

WARNING: OLEO MAY EXTEND WHEN VALVE IS OPENED.

(6) Slowly open oleo valve.

(7) After pressure in oleo has equalized to the regulator pressure, close oleo valve.

(8) Turn off nitrogen tank and set regulator pressure back to zero.

(9) Disconnect the service equipment and install the valve cap.

(10) (280FX) Slide landing gear fairing into position and install retaining screws.

(11) (280FX) Lower flex boot and install screws securing the flex boot to the oleo fairing.

(12) Remove helicopter from sling, as necessary.

4-21 BATTERY

NOTE: Refer to Figure 4-1, View S.

4-22 Servicing – Battery

A. Service battery in accordance with manufacturer's instructions.

4-23 LUBRICATION

4-24 Description – Lubrication

Lubrication of F-28/280 Series helicopters is normally accomplished at specified hourly intervals. Operators should take into consideration the environmental conditions and determine whether more frequent lubrication intervals are necessary.

Refer to Tables 4-1 to 4-2 and Figure 4-1 for approved lubricants, intervals, and locations.

A. Purge lubricate all bearings and remove excess grease before performing post maintenance ground run.

B. Specific bearing lubrication procedures:

(1) Lower pulley (jackstrut) bearing (Para. 4-25); Upper pulley (jackstrut) bearing (Para. 4-35); idler pulley bearings (Para. 4-41); Drive belt roller bearing (Para. 4-44.1)

(2) Main rotor blade grips (Para. 4-27); Main rotor flapping bearings (Para. 4-29)

(3) Collective guide tube bearing (Para. 4-37), Cyclic swashplate bearing (Para. 4-39)

(4) Tail rotor pitch control bearing (Para. 4-31)

UNCONTROLLED COPY WHEN DOWNLOADED OR PRINTED

Visit www.enstromhelicopter.com for instructions to order an original manual and to register for email notification of updates.

C. Lubricate flight control pivot points sparingly to prevent accumulation of dirt.

D. Lubricate the following assemblies where a Teflon (DU) bearing is present using Tri-Flow or equivalent light viscosity lubricant:

(1) Walking beam to control rods in mast (Figure 12-25)

(2) Upper swashplate guide tube bushings (Figure 12-23)

(3) Lower swashplate bushings and DU washers (Figure 12-21)

(4) Collective torque tube, 5 locations

(5) Clutch capsule adapter bushing (Figure 11-19)

4-25 LOWER PULLEY (JACKSTRUT) BEARING

NOTE: Refer to Figure 4-1, View H.

4-26 Lubrication – Lower Pulley (Jackstrut) Bearing

A. Remove purge plug.

B. Purge lubricate lower pulley bearing.

C. Install purge plug.

4-27 MAIN ROTOR BLADE GRIP

NOTE: Refer to Figure 4-1, View P, and Figure 4-2.

4-28 Lubrication - Main Rotor Blade Grip

NOTE: Purge all three blade grips when lubricating the hub to prevent an "out of balance" condition.

CAUTION: DISCONNECT THE PITCH LINKS AND BEFORE ROTATING THE GRIPS. DO NOT OVER-ROTATE.

A. Disconnect pitch links and rotate grips a few degrees up and down to release pressure.

B. Remove purge screw (2) and pump grease into grease fitting (1) until grease purges through the screw hole. Install screw (2).

C. Remove purge screw (3) and pump grease into grease fitting (1) until grease purges through screw hole.

D. Pump grease into fitting (4) until grease purges through screw hole. Install screw (3).

E. Pump grease into grease fitting (4) until grease purges through seal between the end of the grip and spindle.

F. Remove purge screw (3) to relieve any internal pressure against seals. Install screw.

G. Check seal to determine that it has not been displaced.

UNCONTROLLED COPY WHEN DOWNLOADED OR PRINTED

Visit www.enstromhelicopter.com for instructions to order an original manual and to register for email notification of updates.

NOTE: It is necessary to rotate the grip in the feather axis while purge lubricating the retention assembly. This will prevent damage to the seal.

CAUTION: DO NOT OVER ROTATE THE GRIP WHEN THE PITCH LINKS ARE DISCONNECTED (18° MAX).

(1) If the seal has been displaced:

(a) Remove the purge screw from the top of the blade grip.

(b) Insert the blade of a flathead screwdriver between the seal and the spindle.

(c) Carefully work the seal back into the grip.

NOTE: It is normal if grease is displaced out of the purge hole as the seal is pushed back into place.

(d) Reinstall the purge screw.

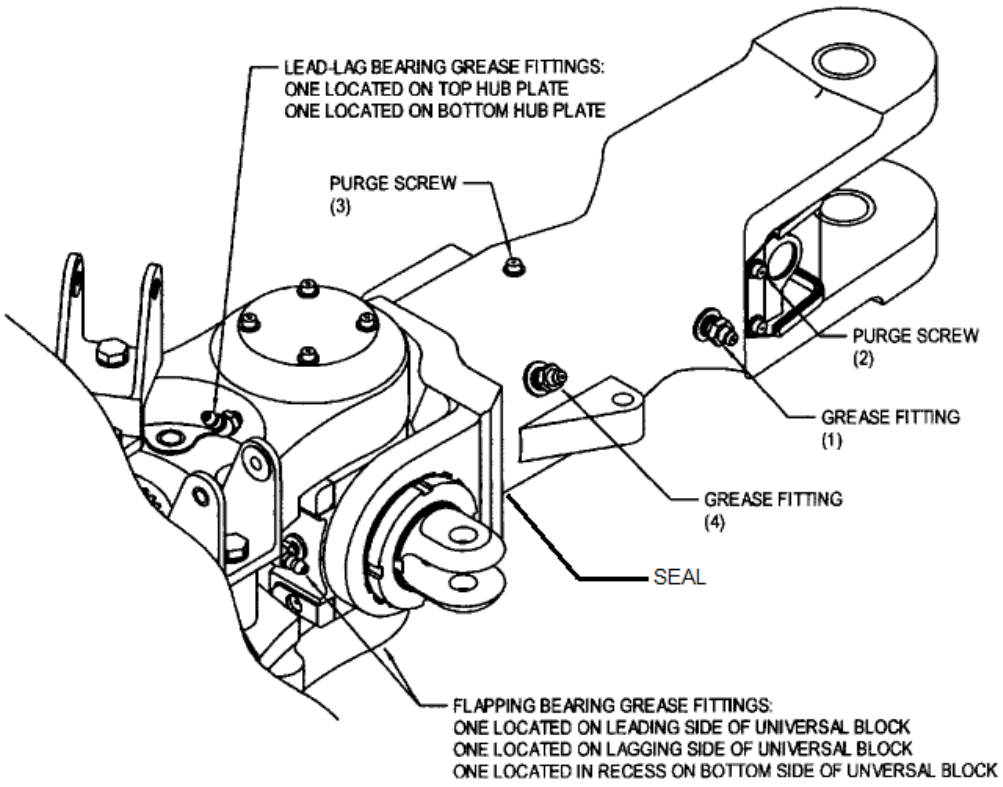

Figure 4-2. Main Rotor Blade Grip, Lead-Lag Bearing, and Flapping Bearing Lubrication

UNCONTROLLED COPY WHEN DOWNLOADED OR PRINTED

Visit www.enstromhelicopter.com for instructions to order an original manual and to register for email notification of updates.

4-29 MAIN ROTOR FLAPPING BEARINGS

NOTE: Refer to Figure 4-1, View Q, and Figure 4-2.

4-30 Lubrication – Main Rotor Flapping Bearings

A. Purge lubricate main rotor flapping bearings using grease fitting located in recess of the bottom of the vertical hinge pin (Figure 4-2).

4-31 TAIL ROTOR PITCH CONTROL BEARING

NOTE: Refer to Figure 4-1, View N.

4-32 Lubrication – Tail Rotor Pitch Control Bearing

4-33 Lubrication, Preferred Method – Tail Rotor Pitch Control Bearing

NOTE: Purge the needle prior to each use and lubricate the external surface of the needle with grease to prevent seal damage.

A. Using a 6 cubic centimeter (cc) medical syringe and an 18 gauge hypodermic needle, inject .5cc of grease into bearing in two places, approximately 180° apart.

NOTE: Carefully insert the tip of the needle under the lip of the seal where it contacts the inner race of the bearing. The tip of the needle can be worked under the lip of the seal and into the bearing between the balls. If the needle does not penetrate between the balls, the needle can be withdrawn and inserted in another position on the bearing.

B. Wipe excess grease from surface of seal as necessary

4-34 Lubrication, Alternate Method – Tail Rotor Pitch Control Bearing

WARNING: USE CAUTION WHEN REMOVING THE SEAL TO PREVENT FROM INJURING YOURSELF.

A. Using a small flat-blade screwdriver or small knife blade, remove seal from inboard side of bearing.

B. Hand pack bearing with grease.

C. Install seal. Ensure it is properly seated.

4-35 UPPER PULLEY (JACKSTRUT) BEARING

NOTE: Refer to Figure 4-1, View G.

4-36 Lubrication – Upper Pulley (Jackstrut) Bearing

A. Purge lubricate bearing via grease fitting.

B. Wipe excess grease from housing as necessary.

UNCONTROLLED COPY WHEN DOWNLOADED OR PRINTED

Visit www.enstromhelicopter.com for instructions to order an original manual and to register for email notification of updates.

4-37 COLLECTIVE GUIDETUBE BEARING

NOTE: Refer to Figure 4-1, View O.

4-38 Lubrication – Collective Guidetube Bearing

A. Purge lubricate bearing via grease fitting.

4-39 CYCLIC SWASHPLATE BEARING

NOTE: Refer to Figure 4-1, View O.

4-40 Lubrication – Cyclic Swashplate Bearing

A. Purge lubricate bearing via grease fitting.

4-41 IDLER PULLEY BEARINGS

NOTE: Refer to Figure 4-1, View I.

4-42 Lubrication – Idler Pulley Bearings

4-43 Lubrication, Preferred Method – Idler Pulley Bearings

NOTE: Purge the needle prior to each use and lubricate the external surface of the needle with grease to prevent seal damage.

A. Using a 6 cubic centimeter (cc) medical syringe and an 18 gauge hypodermic needle, inject .5cc of grease into the bearing in two places, approximately 180° apart.

NOTE: Carefully insert the tip of the needle under the lip of the seal where it contacts the inner race of the bearing. The tip of the needle can be worked under the lip of the seal and into the bearing between the balls. If the needle does not penetrate between the balls, the needle can be withdrawn and inserted in another position on the bearing.

B. Wipe excess grease from surface of seal as necessary.

4-44 Lubrication, Alternate Method – Idler Pulley Bearings

NOTE: The idler pulley/yoke assembly must be removed for this servicing method.

WARNING: USE CAUTION WHEN REMOVING THE SEAL TO PREVENT FROM INJURING YOURSELF.

A. Clean surface of bearing and seal before removing seal.

B. Using a small flat-blade screwdriver or small knife blade, remove seal from aft side of the aft bearing or the front side of bearing.

C. Hand pack bearing with grease.

D. Install seal. Ensure it is properly seated.

UNCONTROLLED COPY WHEN DOWNLOADED OR PRINTED

Visit www.enstromhelicopter.com for instructions to order an original manual and to register for email notification of updates.

4-44.1 DRIVE BELT ROLLER ASSEMBLY

NOTE: Refer to Figure 4-2.1.

4-44.2 Lubrication – Drive Belt Roller

NOTE: When greasing the drive belt “snubber” roller, it is common for the grease to purge through the aft bearing, but not the forward bearing. The following procedure forces grease inside the shaft to purge through the front bearing.

A. Using a 3/16” nylon rope, wind rope around roller shaft between the edge of the roller and the aft actuator arm assembly so as to create a seal against the aft bearing.

B. Tie off ends of rope to the belt tension assembly yoke.

C. Proceed with greasing roller until grease purges from forward roller bearing.

D. Remove rope.

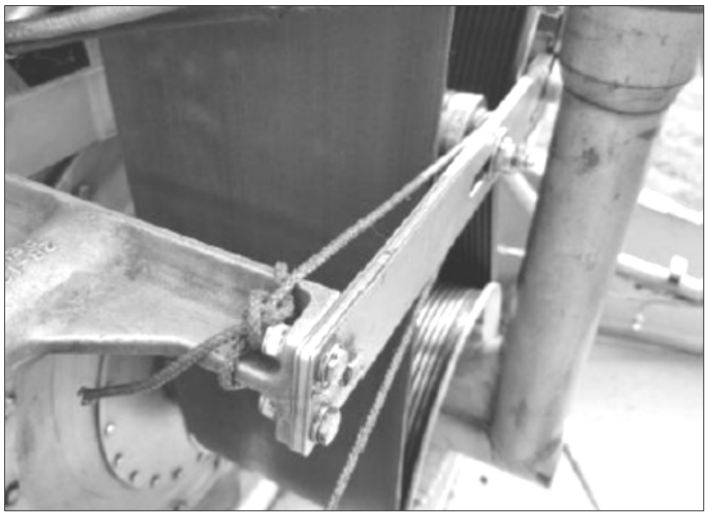

Figure 4-2.1. Roller Grease Purging Procedure

UNCONTROLLED COPY WHEN DOWNLOADED OR PRINTED

Visit www.enstromhelicopter.com for instructions to order an original manual and to register for email notification of updates.

4-45 RECOMMENDED OVERHAUL CYCLES

A. Refer to Table 4-9 for components with recommended overhaul cycles established by Enstrom Helicopter Corporation and other component manufacturers.

NOTE: Refer to the latest revision of Textron-Lycoming Service Instruction No. 1009 for the recommended overhaul cycle for the HIO-360 Series engine.

NOTE: Refer to the latest revision of the *Rayjay Aircraft Turbocharger Overhaul and Test Manual* for the recommended overhaul cycle for the turbocharger.

NOTE: All other components not listed in Table 4-9 are “on condition” items.

B. Overhaul cycle components authorized for installation on the F-28F, 280F, and 280FX must use the shorter overhaul cycle for the duration of the component overhaul cycle if the component is removed from one model of aircraft and installed on a model with a different overhaul cycle.

Table 4-9. Recommended Overhaul Cycles

ITEM	PART NUMBER	OVERHAUL CYCLE (hours)
		F-28F/280F Series
Clutch, Overrunning	28-13401-2, -4	2400
Transmission, Main Rotor	28-13101 (All dash numbers) 28-13170 (All dash numbers)	1200 1200
Transmission, Tail Rotor	28-13520 (All dash numbers) 28-13525 (All dash numbers)	1200 1200

UNCONTROLLED COPY WHEN DOWNLOADED OR PRINTED

Visit www.enstromhelicopter.com for instructions to order an original manual and to register for email notification of updates.

4-46 PERIODIC INSPECTIONS

4-47 General Information

A. Periodic Inspection Checklists are set forth in paragraphs 4-50 through 4-53. These inspection checklists are intended to be used in conjunction with more detailed procedures presented in other sections of this manual, optional equipment maintenance manual supplements, or vendor manuals. Special inspections are set forth in paragraph 4-54. These special inspections are required following such occurrences as a main rotor and/or tail rotor blade strike, a hard landing, or a rotor overspeed.

(1) The time extension for the periodic inspections is as follows:

(a) 50, 100, 200, and 400 hour periodic inspections – 10 hours.

(2) If the extension is used, the next scheduled inspection is due at the time applicable prior to using the extension. For example, if a 100 hour periodic inspection is due at 100 hours, but is performed at 108 hours, the next periodic 100 hour inspection is due at 200 hours not 208 hours.

(3) If the periodic inspection is performed early, the next periodic inspection is due based on when the inspection was performed. For example, if the periodic inspection was performed at 98 hours instead of 100 hours, the next periodic inspection is due at 198 hours, not 200 hours.

(4) The 10 hour extension does not apply to life limited components.

B. Mandatory component replacement times in flight hours are specified in Paragraph 3-2.

C. Recommended component overhaul cycles are specified in Paragraph 4-45.

4-48 Daily Inspection

The Enstrom F-28F, 280F, and 280FX do not require a mandatory daily (maintenance) inspection. Owner/Operators opting to have maintenance personnel check the aircraft should perform a pre-flight check I/A/W the F-28F, 280F, or 280FX Rotorcraft Flight Manual.

4-49 Periodic Inspection Checklists

A. These inspection checklists are intended for aircraft operating under normal condition. More frequent inspections may be required should adverse operations be encountered.

B. For more detailed inspection procedures and tolerance, refer to the appropriate section in the maintenance manual, optional equipment maintenance manual supplements, or vendor manuals.

C. Perform a 100 hour inspection, as a minimum, to meet the requirements for an Annual Inspection as required by 14 CFR Part 91, as applicable.

D. Refer to the Textron-Lycoming O, HO, AIO, HIO, TIO-360 Series Operator's Manual (60297-12) for the specific inspection requirements for continued airworthiness of the engine.

UNCONTROLLED COPY WHEN DOWNLOADED OR PRINTED

Visit www.enstromhelicopter.com for instructions to order an original manual and to register for email notification of updates.

INTENTIONALLY LEFT BLANK

UNCONTROLLED COPY WHEN DOWNLOADED OR PRINTED

Visit www.enstromhelicopter.com for instructions to order an original manual and to register for email notification of updates.

4-50 50 HOUR INSPECTION GUIDE – PERIODIC INSPECTION

AIRCRAFT REGISTRATION NUMBER:		SIGNATURE:	
AIRCRAFT SERIAL NUMBER:		DATE:	
HOURS:	Engine:	Flight:	

50 HOUR INSPECTION GUIDE

INITIAL EACH ITEM AFTER ACCOMPLISHMENT	INITIAL	REF
1. GENERAL INSPECTION		
A. Inspect engine records and discrepancy sheets.	_____	
B. Check engine records for time remaining TBO.	_____	
C. Check for special engine inspections.	_____	
D. Check compliance with applicable engine Service Letters, Service Bulletins, and Airworthiness Directives.	_____	
E. Remove cowling and access panels as required to inspect the engine and drive system.	_____	
2. ENGINE		
A. Inspect engine in accordance with the Textron-Lycoming O, HO, AIO, HIO, TIO-360 Series Operator's Manual (60297-12).	_____	
3. FLIGHT CONTROLS		
A. Verify tail rotor pitch change horn/pitch change link installation hardware and torque (55-75 in-lb/6.2-8.5 Nm).	_____	Fig. 10-3 Para. 10-1,J
B. (F-28F S/N 814 and prior, and 280F/FX S/N 2087 and prior that have tail rotor cable turnbuckles located in the engine department): Visually inspect the cable ends, turnbuckles, and hardware for evidence of corrosion.	_____	Para. 10-8,A SDB 0131
4. DRIVE BELT SYSTEM		
A. Inspect the Belt Engagement (Clutch) Assembly for:		
(1) Proper extension of the piston with the clutch engaged (measurement: 1.63-1.75 in/41.1-44.5 mm).	_____	Para. 11-1,A,(2),(e)
(2) Worn or loose nylon guides in the side plate slots.	_____	Fig. 11-18, Item 8
(3) Wear notches in the side plate slots.	_____	Table 11-7, Item 9
(4) Microswitch for proper operation at the over-center position.	_____	Para. 11-1,B
(5) Bushing in the bellcrank at the pylon for looseness.	_____	Fig. 11-3, Item 20
(6) Security of the clutch engagement cable.	_____	Para. 11-2,B
(7) Security of all attaching hardware.	_____	Para. 11-1,A
(8) Cracks in the adjacent pylon structure.	_____	Fig. 11-20

UNCONTROLLED COPY WHEN DOWNLOADED OR PRINTED

Visit www.enstromhelicopter.com for instructions to order an original manual and to register for email notification of updates.

50 HOUR INSPECTION GUIDE		
INITIAL EACH ITEM AFTER ACCOMPLISHMENT	**INITIAL**	**REF**
(9) Clutch capsule adapter and bushing for wear. Replace Bushing (P/N 07DU08) as required.	_____	Fig. 11-19, Item 5 Table 11-8
(10) Clearance at the bottom of the spring capsule (between the anchor and the pylon).	_____	Para. 11-1,A,(2),(f)
B. Inspect the Idler Pulley Assembly for:		
(1) Looseness in the idler yoke shaft rod end bearing (Fig. 11-14, Item 38).	_____	Fig. 11-14, Item 38
(2) Cracks in the idler yoke end. (This only applies to P/N 28-13299-1, S/N range 14-001-16 to 14-077-06, identified in the cast surface as 14-##-06 or 14-###-06.)	_____	Fig. 11-14, Item 15 Para. 11-8.1, C
(3) Cracks and security of the idler stabilizer.	_____	Fig. 11-16, Item 49
(4) Evidence of idler pulley out of track.	_____	Para. 11-5,A and D,(3),(a) Para. 11-8,A
(5) Worn or loose idler yoke support bushings.	_____	Fig. 11-14, Item 26
(6) Proper clearance of the belt “snubber” roller (clutch engaged).	_____	Para. 11-5, B,(11)
(7) Security of all hardware.	_____	
C. Inspect the Drive Belt for:		
(1) Condition of sealed edge.	_____	Fig. 11-8.5, Fig. 11-8.6
(2) Possible contact with adjacent structures.	_____	Fig. 11-8.4
(3) Loose or protruding cord on forward and aft edges of the drive belt around the circumference of the upper and lower pulleys.	_____	Para. 11-5,D, (3),(c)

UNCONTROLLED COPY WHEN DOWNLOADED OR PRINTED

Visit www.enstromhelicopter.com for instructions to order an original manual and to register for email notification of updates.

4-51 100 HOUR/ANNUAL INSPECTION GUIDE – PERIODIC INSPECTION

AIRCRAFT REGISTRATION NUMBER:		SIGNATURE:	
AIRCRAFT SERIAL NUMBER:		DATE:	
HOURS: Engine:	Flight:		
CYCLES (Start Counter):			

100 HOUR/ANNUAL INSPECTION GUIDE		
INITIAL EACH ITEM AFTER ACCOMPLISHMENT	**INITIAL**	**REF**
1. GENERAL INSPECTION		
A. Perform a complete 50 Hour Inspection.	_____	
B. Inspect the aircraft records and discrepancy sheets.	_____	
C. Check the aircraft and engine records for TBO and Retirement Life items.	_____	
D. Check for special airframe or engine inspections.	_____	
E. Check compliance with applicable Service Information Letters, Service Directive Bulletins, and Airworthiness Directives.	_____	
F. Inspect the aircraft for evidence of fuel and oil leaks.	_____	
G. Clean the aircraft thoroughly.	_____	
H. Remove the following cowling, access panels, and components:		
(1) Wrap around cowling (top and sides)	_____	
(2) Engine side panels	_____	
(3) Upper side panels	_____	
(4) Spark plug covers	_____	
(5) Cabin doors	_____	
(6) Seat deck	_____	
(7) Floor panels	_____	
(8) Firewall panels (cabin backwall)	_____	
(9) Fuel transmitter panel (right fuel tank)	_____	
2. AIRCRAFT STRUCTURE & FUSELAGE		
A. Aircraft Exterior:		
(1) Inspect the aircraft exterior for cleanliness, corrosion, and damage.	_____	
(2) Inspect the cowling and access panels for worn, loose, or missing fasteners.	_____	
B. Fuel System:		
(1) Inspect the fuel tanks for evidence of loose rivets, bond separation, leaks, condition of gasket in the fuel caps, and proper operation of the fuel caps.	_____	

UNCONTROLLED COPY WHEN DOWNLOADED OR PRINTED

Visit www.enstromhelicopter.com for instructions to order an original manual and to register for email notification of updates.

100 HOUR/ANNUAL INSPECTION GUIDE		
INITIAL EACH ITEM AFTER ACCOMPLISHMENT	**INITIAL**	**REF**
(2) Inspect the fuel supply lines for condition, leaks, and security of installation.	_____	
(3) Inspect the vent and drain lines for obstructions, condition, and security of installation.	_____	
(4) Inspect the drain valves and the fuel shutoff valve for leaks, condition, proper operation, and security of installation.	_____	
(5) Inspect the scupper bags for looseness, tears, condition, and security of installation.	_____	
(6) Inspect the fuel quantity transmitter wiring and transmitter terminals for evidence of corrosion, condition, and security of installation.	_____	Para. 13-10, B,(4),(a.1)
NOTE: If maintenance is performed on the fuel quantity system, calibrate the fuel quantity transmitter.		
(7) Inspect the fuel filter assembly for cracks, evidence of corrosion, lose or damaged fittings, worn or damaged gaskets, or securing of filter retaining pin.	_____	Para. 13-10, E, (3), (a)
3. COMPONENTS		
A. Components:		
(1) Inspect components installed on the aircraft for condition, damage, proper operation, and security of installation.	_____	
4. ENGINE		
A. Inspect and service the engine in accordance with the Textron-Lycoming O, HO, AIO, HIO, TIO-360 Series Operator's Manual (60297-12).	_____	
B. Lubrication System:		
(1) Drain the engine oil coolers and inspect the oil cooler(s) for condition, security of installation, and obstruction of airflow.	_____	Para. 4-8
(2) Inspect the cooler cleanout doors for condition and security.	_____	
(3) Inspect the scavenge oil pump for condition, security of installation, and leaks.	_____	
(4) Inspect the oil lines for condition, chaffing, and security.	_____	
(5) Service the engine oil.	_____	Para. 4-7
C. Fuel System:		
(1) Inspect the fuel boost pump for condition, security of installation, operation, and leakage.	_____	
(2) Inspect the engine driven fuel pump for condition, security of installation, and leakage.	_____	Para. 13-10, D,(2)
(3) Inspect the main fuel filter for condition, security of installation, and leakage.	_____	Para. 13-10, E,(3)
(4) Inspect and clean the main fuel filter element.	_____	Para. 4-5.1
(5) Inspect the fuel lines for condition, chaffing, and security.	_____	

UNCONTROLLED COPY WHEN DOWNLOADED OR PRINTED

Visit www.enstromhelicopter.com for instructions to order an original manual and to register for email notification of updates.

100 HOUR/ANNUAL INSPECTION GUIDE		
INITIAL EACH ITEM AFTER ACCOMPLISHMENT	**INITIAL**	**REF**
(6) Inspect the fuel nozzle air manifolds and lines for condition and security of installation.	_____	
D. Fuel Servo:		
(1) Inspect the fuel servo for condition and security of installation.	_____	Para. 13-4, D,(6)
(2) Inspect the Automatic Mixture Control (AMC) blast tube for condition and security of installation.	_____	
(3) Inspect the throttle and mixture controls for proper operation, condition, and security of installation.	_____	
NOTE: Verify proper installation of the spring washers if adjustments were performed on the mixture adjustment rod.		Para. 13-4, D,(8),(a)
E. Exhaust System:		
(1) Inspect the exhaust system for evidence of leaks or cracks and proper security and installation of all clamps.	_____	Para. 13-5, C, D
(2) Inspect the heat exchanger (muff heater) for evidence of leaks, cracks, condition, and security of installation.	_____	
F. Turbocharger System:		Para. 13-5,C
(1) Inspect the turbocharger, oil lines, and fittings for leaks, condition, and security of installation.	_____	
(2) Inspect the turbocharger support brackets for condition and security of installation.	_____	
(3) Inspect the turbo inlet adaptor gasket condition, adapter flange weld condition, and condition security of installation.	_____	Para. 13-5, D,(1)
(a) Verify adapter attachment screw torque (35 in-lb/4.0 Nm)		
(4) Inspect the exhaust pipe, air induction pipes, and clamps for condition and security of installation.	_____	Para. 13-5, C and D
(5) Inspect the turbocharger heat shield for condition and security of installation.	_____	
(6) Inspect the wastegate system for proper operation and security of installation.	_____	Para. 13-3,H
(7) Inspect the wastegate control rod for proper operation of the override detent.	_____	
G. Cooling System:		
(1) Inspect the fan shroud for condition, alignment, worn or missing fasteners.	_____	
(2) Inspect the fan shroud seal for condition.	_____	
(3) Inspect the cowling and baffling for condition and security of installation.	_____	
(4) Inspect the cooling fan for condition and security of the fan blades and proper clearance at the shroud.	_____	
(5) Inspect the fire curtain for condition and security of installation.	_____	

UNCONTROLLED COPY WHEN DOWNLOADED OR PRINTED

Visit www.enstromhelicopter.com for instructions to order an original manual and to register for email notification of updates.

100 HOUR/ANNUAL INSPECTION GUIDE		
INITIAL EACH ITEM AFTER ACCOMPLISHMENT	**INITIAL**	**REF**
H. Starter:		
(1) Inspect starter for condition and security of installation.	_____	
I. Alternator:		
(1) Inspect alternator for condition, evidence of overheating, and security of installation.	_____	
(2) Inspect the alternator drive belt for condition and proper tension.	_____	
J. Engine Mounts:		
(1) Inspect the engine mounts for condition and security of installation.	_____	
K. Engine Electrical System:		
(1) Inspect the engine electrical wiring harness for chaffing, condition, proper clamping, and security of installation.	_____	
(2) Inspect the electrical component panel and components for condition and security of installation.	_____	
(3) Inspect the engine to pylon ground strap for condition and security of installation.	_____	
L. Pylon Assembly:		
(1) Inspect the pylon in the engine area for corrosion, cracks, dents, or other damage, and condition of the protective primer/epoxy coating.	_____	Para. 8-10,B
M. Air Induction System:		
(1) Inspect the filter container assembly for condition, proper operation of the bypass door, and security of installation.	_____	SDB 0129
(2) Replace the filter element.	_____	
(3) Inspect the flex duct and fuel servo adapter for condition and security of installation.	_____	
(4) Inspect the vent line and check valve for condition and security of installation.	_____	
(5) Inspect engine access panel seal for condition.	_____	
N. Engine Cylinder Compression:		
(1) Inspect engine cylinders for proper compression (Refer to the latest revision of Textron-Lycoming Service Instruction No. 1191, latest revision). Cylinder 1 _____ Cylinder 2 _____ Cylinder 3 _____ Cylinder 4 _____		Textron-Lycoming SI 1191
O. Engine Access Panels:	_____	
(1) Inspect the engine access panels for cracks, damage, condition of hinges, and worn or missing fasteners.	_____	

UNCONTROLLED COPY WHEN DOWNLOADED OR PRINTED

Visit www.enstromhelicopter.com for instructions to order an original manual and to register for email notification of updates.

100 HOUR/ANNUAL INSPECTION GUIDE		
INITIAL EACH ITEM AFTER ACCOMPLISHMENT	**INITIAL**	**REF**
5. LANDING GEAR ASSEMBLY		
A. Crosstubes:		
(1) Inspect the crosstube attachment clamps for deformation, corrosion, cracks, evidence of elongated bolt holes, and security of the attaching hardware.	_____	Para. 8-9,A, (2),(d)
(2) Inspect the crosstubes for damage, worn or missing hardware, and security of installation.	_____	Para. 8-9, A, (2),(a)
(3) Inspect the crosstubes for excessive bowing (>0.5 inch/12.7 mm) while the aircraft is hanging and not sitting on ground.	_____	Para. 8-9,A, (2),(a)
B. Landing Gear Legs and Drag Struts:		
(1) Inspect the landing gear legs and drag struts for cracks, damage, corrosion, and security of installation.	_____	Para. 8-9,A, (2),(b)
(a) Inspect the landing gear leg opposite the lower oleo fitting and adjacent to the upper portion of the bottom gusset utilizing a tapping procedure in any area that may exhibit surface blisters or roughness.	_____	Para. 8-9, A, (b)
(2) Inspect the landing gear leg fairings for condition and security of installation (280FX).	_____	Para. 8-9,E, (3)
C. Landing Gear Oleos:		
(1) Inspect the oleos for leaks, corrosion, proper servicing, and security of installation.	_____	Para. 8-9,D, (3)
(2) Inspect the oleo fairings for condition and security of installation (280FX).	_____	Para. 8-9,E, (3)
D. Skid Tubes:		
(1) Inspect the skid tubes for condition and security of installation.	_____	Para. 8-9,A, (2),(c)
(2) Inspect the skid shoes for condition and security of installation.	_____	Para. 8-9,B
(3) Inspect the non-skid tape/paint for condition.	_____	
E. Ground Handling Wheels:		
(1) Inspect the ground handling wheels and brackets for condition and security of installation.	_____	
(2) Inspect the tires for condition and proper inflation.	_____	
(3) Inspect the quick disconnect locking pins for condition.	_____	

UNCONTROLLED COPY WHEN DOWNLOADED OR PRINTED

Visit www.enstromhelicopter.com for instructions to order an original manual and to register for email notification of updates.

100 HOUR/ANNUAL INSPECTION GUIDE		
INITIAL EACH ITEM AFTER ACCOMPLISHMENT	**INITIAL**	**REF**
6. DRIVE BELT SYSTEM		
A. Belt Engagement (Clutch) Assembly:		
(1) Inspect spring capsule for proper extension with belt clutch disengaged and engaged (measurement: 1.63-1.75 in/41.1-44.5 mm), worn or loose nylon guides in the side plates, condition, and security of installation.	_____	Para. 11-1, A, (2),(e) Fig. 11-18, Item 8
(2) Inspect clutch capsule adapter and bushing for wear. Replace Bushing (P/N 07DU08) as required.	_____	Table 11-8, Item 5
NOTE: Lube spring and capsule.		Para. 11-19, I
(3) Inspect side plates for wear in slot, condition, and security of installation.		Table 11-7, Item 9
(4) Inspect over-center microswitch for condition and proper operation.	_____	Para. 11-1,B
(5) Inspect engagement bellcrank for loose or worn bushings, condition, and security of installation.	_____	Fig. 11-3, Item 20
(6) Inspect clutch engagement cable for condition and security of installation.	_____	
(7) Verify clearance of 0.125 in/3.2 mm between clutch lever and the spacer in the bellcrank.	_____	Fig. 11-1, Detail e
B. Idler Pulley Assembly:		Para. 11-8
(1) Inspect idler pulley support bracket for worn bushings, cracks, condition, and security of installation.	_____	
(2) Inspect idler pulley yoke and shaft for cracks, worn rod end bearing, rod end threads (corrosion and corrosion protection condition, condition, and security of installation). (a) Check records for compliance with SDB 0127 and type of corrosion inhibitor applied. If ACF-050, re-apply as required.	_____	Fig. 11-13, Items 8, 1 Fig. 11-14, Item 38 SDB 0127
(3) Inspect idler pulley yoke straps (actuator arms) for worn bushings, cracks, condition, and security of installation.	_____	Para. 11-8.2, D
(4) Inspect idler pulley for worn bearings, evidence of drive belt not tracking properly, condition, and security of installation.	_____	Table 11-3, Item 3
(5) Inspect belt snubber roller for worn bearings, condition, security of installation, and proper alignment/clearance with drive belt (drive belt engaged).	_____	Fig. 11-14, (31) Para. 11-1, A, (g)
(6) Inspect idler pulley pylon support strut for condition and security of installation.	_____	Fig. 11-16, Item 49

UNCONTROLLED COPY WHEN DOWNLOADED OR PRINTED

Visit www.enstromhelicopter.com for instructions to order an original manual and to register for email notification of updates.

100 HOUR/ANNUAL INSPECTION GUIDE		
INITIAL EACH ITEM AFTER ACCOMPLISHMENT	**INITIAL**	**REF**
C. Jackstrut and Lower Pulley Assembly:		Para. 11-4, D
(1) Inspect the jackstrut for bond separations, condition, and security of installation.	_____	Table 11-1
(2) Inspect the lower pulley for wear, excessive grease leakage, condition, and security of installation.	_____	Table 11-1
D. Upper Pulley Assembly:		
(1) Inspect the upper pulley wear, condition, and security of installation.	_____	Para. 11-7, F Table 11-2
(2) Inspect the overrunning clutch for proper servicing, leaks, condition, and security of installation. Service the overrunning clutch.	_____	Para. 4-13
(3) Inspect the pinion bearing assembly for evidence of worn or loose bearing, condition, and security of installation.	_____	
(4) Check pinion bearing nut for proper torque (250 ft-lb/339.0 Nm).	_____	
E. Drive Belt		
(1) Inspect the drive belt for cracks, fraying, missing sections, and edge condition.	_____	Para. 11-5, D
F. Pylon:		
(1) Inspect the pylon in the belt drive area for corrosion, cracks, dents, or other damage, and condition of the protective primer/epoxy coating.	_____	Fig. 11-20
7. TAIL CONE ASSEMBLY		
A. Tail Cone:		
(1) Inspect the tail cone bulkheads, longerons, stringers, doublers, and fittings for cracks, dents, and loose rivets.	_____	Para. 8-12, B
(2) Inspect the tail cone for proper installation.	_____	
(3) Inspect the static ports for obstructions, damage, and security of installation.	_____	Fig. 7-3
B. Horizontal and Vertical Stabilizers:		
(1) Inspect the horizontal and vertical stabilizers for damage, cracks, loose rivets, and security of installation.	_____	Para. 8-15,B Para. 8-16,B Para. 8-14,B
(a) F-28F S/N 743 and earlier: Remove the spar and inspect the spar mounting holes and the two inboard stabilizer mounting holes in accordance with Para. 8-14, B. Visually the attachment fittings for security, cracks, and evidence of corrosion.		

UNCONTROLLED COPY WHEN DOWNLOADED OR PRINTED

Visit www.enstromhelicopter.com for instructions to order an original manual and to register for email notification of updates.

100 HOUR/ANNUAL INSPECTION GUIDE		
INITIAL EACH ITEM AFTER ACCOMPLISHMENT	**INITIAL**	**REF**
C. Tail Rotor Guard:		
(1) Inspect the tail rotor guard for damage, loose rivets, and security of installation.	_____	Para. 8-12.1, B
E. Tail Rotor Driveshaft:		
(1) Inspect the tail rotor driveshaft, hubs, and taper pins for damage and security of installation.	_____	Para. 10-6, D
(2) Inspect the splined couplings, P/N 28-13609-1, proper lubrication, wear, and security of installation.	_____	
(3) Inspect the flex pack couplings for damage and security of installation.	_____	Para. 10-6.1, C
(4) Inspect the pillow block assemblies for evidence of rough/worn bearings, condition of the rubber inserts, and security of installation.	_____	Para. 10-6.2, B
(5) Inspect the main rotor tachometer drive belts and tachometer drive assembly for condition and security of installation.	_____	Para. 10-6.1, C,(2)
8. TAIL ROTOR TRANSMISSION		
A. Tail Rotor Transmission:		
(1) Inspect the tail rotor transmission for seal leakage, cracked/damaged housing, condition and security of plugs/sight plugs, and security of installation.	_____	Para. 10-5, D
(2) Drain the transmission and inspect the magnetic plug/chip detector for the presence of magnetic particles.	_____	Para. 4-16 Para. 4-62, B, (3)
(3) Service the transmission.	_____	Para. 4-15
B. Tail Rotor Pitch Controls:		
(1) Inspect the tail rotor pitch controls for worn bushings at the pivot points, damage, and security of installation.	_____	Fig. 10-15, Table 10-2
(2) Inspect the slider assembly for freedom of operation and wear.	_____	
(3) Inspect the pitch control bearing for condition.	_____	Table 10-2

UNCONTROLLED COPY WHEN DOWNLOADED OR PRINTED

Visit www.enstromhelicopter.com for instructions to order an original manual and to register for email notification of updates.

100 HOUR/ANNUAL INSPECTION GUIDE		
INITIAL EACH ITEM AFTER ACCOMPLISHMENT	**INITIAL**	**REF**
9. TAIL ROTOR ASSEMBLY		
A. Tail Rotor Assembly:		Para. 10-1 Table 10-1
(1) Inspect the tail rotor blade and grip assemblies for cracks, nicks, dents, scratches, bends, fretting, bond separations, corrosion, loose tip rivets, and condition of strike tabs.	_____	
(2) Inspect the tail rotor spindle and hub for cracks, nicks, scratches, corrosion.	_____	
(3) Inspect the teeter bearings for wear or excessive end play.	_____	
(4) Inspect the tail rotor blade grip bearings for excessive play or notchiness.	_____	
(5) Inspect the pitch change links for condition, worn rod end bearings, proper hardware, and security of installation.	_____	Para. 10-1,J
(6) Inspect tail rotor static stop and rubber bumpers for condition and security of installation.	_____	
10. MAIN ROTOR TRANSMISSION		
A. Main Rotor Transmission		
(1) Inspect the main rotor transmission for seal leakage, corrosion, damage, cleanliness of sight glass, and condition of installation hardware slippage marks.	_____	
(2) Inspect the main rotor mast for corrosion, nicks, scratches or other damage.	_____	
(3) Drain the transmission and inspect the magnetic pickup/chip detector for metal particles.	_____	Para. 4-13 Para. 4-62,A, (1)
(4) Inspect the ring and pinion gears for wear and spalling.	_____	
(5) Service the transmission.	_____	Para. 4-12
B. Pylon:		
(1) Inspect the pylon in the main rotor transmission area for corrosion, cracks, dents, or other damage, and condition of the protective primer/epoxy coating.	_____	
11. MAIN ROTOR ASSEMBLY		
A. Main Rotor Blades:		
(1) Inspect the main rotor blades for corrosion, nicks, dents, scratches, and bonding separations and security of installation.	_____	Para. 9-9
(2) Inspect the trim tabs, drag link attachment fittings, and tip rib for condition and loose rivets.	_____	
(3) Inspect the blade tape, if installed, for condition and security of installation.	_____	
(4) Review records for date of last CPC application. Re-apply, if required.	_____	Para. 4-54,4 Para. 4-90

UNCONTROLLED COPY WHEN DOWNLOADED OR PRINTED

Visit www.enstromhelicopter.com for instructions to order an original manual and to register for email notification of updates.

100 HOUR/ANNUAL INSPECTION GUIDE		
INITIAL EACH ITEM AFTER ACCOMPLISHMENT	**INITIAL**	**REF**
B. Main Rotor Retention Assemblies:		
(1) Inspect the flapping stops and pitch horn for condition and security of installation.	_____	Table 9-2
(2) Inspect the blade grips and drag links for condition and security of installation.	_____	
(3) Inspect the blade pins for corrosion and condition.	_____	
(4) Inspect Lamiflex bearings for condition, if equipped.	_____	
C. Universal Block Assemblies:		
(1) Inspect the lead/lag stops and lower nuts for condition and security of installation.	_____	
D. Main Rotor Dampers:		
(1) Inspect the main rotor dampers for leaks, condition, and security of installation.	_____	
(2) Inspect the damper rod end bearings for excessive radial wear (.007"/.18 mm max.), inspect for corrosion in the threads and thread corrosion protection condition.	_____	Table 9-3, SDB 0127
E. Main Rotor Hub Center Section:		Table 9-1
(1) Inspect the hub center section for cracks, nicks, scratches, corrosion, and condition and security of hardware.	_____	
(2) Inspect the upper and lower spline adapters for fretting.	_____	
(3) Inspect the torque stripe indicators on the mast nut. If the indicators show loss of torque on the mast nut or are not installed, check the torque on the mast nut (400 ft-lb/542.3 Nm).	_____	
F. Pitch Change Bellcranks:		
(1) Inspect the pitch change bellcranks for condition, excessive wear and bearing operation at pivot points, and security of installation.	_____	Table 9-1
G. Pitch Change Links:		
(1) Inspect the pitch change links for excessive rod end bearing wear, condition, and security of installation.	_____	
H. Upper Control Push-Pull Rods:		
(1) Inspect the push-pull rods for excessive wear in the upper fitting, looseness of fitting, and evidence of damage.	_____	Para. 12-12, B
12. SWASHPLATE CONTROL SYSTEM		
A. Swashplate Assembly:		
(1) Inspect the lower swashplate assembly for condition and security of installation.	_____	Para. 12-10,C
(2) Inspect the lower swashplate assembly universal joint for looseness.	_____	Para. 12-10,C

UNCONTROLLED COPY WHEN DOWNLOADED OR PRINTED

Visit www.enstromhelicopter.com for instructions to order an original manual and to register for email notification of updates.

100 HOUR/ANNUAL INSPECTION GUIDE		
INITIAL EACH ITEM AFTER ACCOMPLISHMENT	**INITIAL**	**REF**
(3) Inspect the upper control rod end (dogleg) bearings for excessive wear and security of installation.	_____	Para. 12-11,D
(4) Inspect the longitudinal and lateral control rod ends for excessive wear, corrosion, and security of installation.	_____	Para. 12-12,B SDB 0096
(5) Inspect the cyclic bearing for excessive wear.	_____	
B. Collective Guide Tube Assembly:		
(1) Inspect the collective guide tube assembly for condition and security of installation.	_____	Table 12-2
(2) Inspect the guide tube DU washers for radial wear.	_____	
(3) Inspect the collective bearing for excessive wear.	_____	Para. 12-11, C, 1, d)
(4) Inspect the collective walking beam for cracks, nicks, scratches, condition, excessive wear at the pivot strap bushings, and security of installation.	_____	
13. CABIN SECTION		
A. Cabin Exterior:		
(1) Inspect the cabin doors for proper operation, condition, and security of installation.	_____	Para. 8-4,B Para. 8-4,H
(a) 280F Series: Verify door latch operation and inspect and adjust the door handle assembly, if required.	_____	Para. 8-4, H,(2)
(2) Inspect the windshield(s), cabin windows, and door windows for cracks, crazing, and other damage.	_____	Para. 8-2, A
(3) Inspect the pitot tube for obstructions, damage, and security of installation.	_____	Fig. 7-3
(4) Inspect the position light assemblies for condition and security of installation (If applicable).	_____	
B. Cabin Interior:		
(1) Inspect the cabin interior for corrosion, damage, and presence/legibility of required and other placards.	_____	Para. 8-8,A
(2) Inspect the carpeting/upholstery and trim for condition and security of installation.	_____	
(3) Inspect the seat cushions and seat deck for damage and security of installation.	_____	
(4) Inspect the safety belts and shoulder harnesses for condition, proper operation, and security of attachment.	_____	
(a) Verify proper orientation of belt fitting and locking spring latch.		Para. 8-7, B.1
(5) Inspect the fire extinguisher for date of the last inspection and security of installation.	_____	

UNCONTROLLED COPY WHEN DOWNLOADED OR PRINTED

Visit www.enstromhelicopter.com for instructions to order an original manual and to register for email notification of updates.

100 HOUR/ANNUAL INSPECTION GUIDE		
INITIAL EACH ITEM AFTER ACCOMPLISHMENT	**INITIAL**	**REF**
C. Instrument Console/Panel:		
(1) Inspect the instrument console/panel and shrouds/covers for condition, security of installation, presence/legibility of required placards and other placards.	_____	
(2) Inspect the instruments and other equipment for condition and security of installation.	_____	
D. Seat Structure		
(1) Inspect the seat structure and bulkheads for corrosion, loose rivets, and other damage.	_____	Para. 8-8, B
E. Cabin Heating System:		
(1) Inspect the heating system ducts and outlets for obstructions, condition, and security of installation.	_____	
(2) Inspect the heater controls for proper operation, condition, and security of installation.	_____	
14. FLIGHT CONTROLS		
A. Cyclic Flight Controls:		
(1) Inspect the cyclic flight controls for freedom of operation and proper range of travel (refer to para. 12-7, B).	_____	Para. 12-7, B
(2) Inspect the cyclic sticks, control rods, and bellcranks for condition, excessively worn rod end bearings/bushings, and security of installation.	_____	
(3) Inspect the upper cabin bellcrank mounts for cracks, condition, and security of installation, and freedom of movement.	_____	Para. 12-7, F
(a) Verify torque (50-70 in-lb/5.6-7.9 Nm).		
(4) Inspect the trim motor assemblies and bias springs for condition and security of installation.	_____	
B. Collective Flight Controls:		
(1) Inspect the collective flight controls for freedom of operation and proper range of travel (collective contacts up stop and down stop).	_____	
(2) Inspect the collective friction for proper operation, condition, and security of installation.	_____	Para. 12-10, C, 1, c)
(3) Inspect the collective sticks, torque tube assembly, control rods and bellcranks for excessively worn rod end bearings/bushings, and security of installation.	_____	
(4) Inspect the collective spring capsule assembly for proper operation, condition and security of installation.	_____	

UNCONTROLLED COPY WHEN DOWNLOADED OR PRINTED

Visit www.enstromhelicopter.com for instructions to order an original manual and to register for email notification of updates.

100 HOUR/ANNUAL INSPECTION GUIDE		
INITIAL EACH ITEM AFTER ACCOMPLISHMENT	**INITIAL**	**REF**
(5) Inspect the correlator system for proper operation, condition, and security of installation.	_____	
C. Tail Rotor Controls:		
(1) Inspect the tail rotor control cables, cable ends, turnbuckles, and hardware for wear, corrosion, proper operation, proper cable tension, correct range of travel, and security of installation (refer to para. 10-8, A).	_____	Para. 10-8,A
(a) Inspect the cable ends for PVC tape and remove if present.		
(2) Inspect the pulleys and fairleads for wear, proper operation, and security of installation.	_____	Para. 10-8, A, (5)
(3) Inspect the pedal assemblies, control rods, and bellcranks for excessively worn rod end bearings/bushings, condition, and security of installation.	_____	Para. 10-7, A, (3), 12-7
(a) Apply a corrosion inhibitor (ACF-50, or equivalent) to unpainted pivot areas of the removable foot pedal assembly.	_____	
(4) Inspect the tail rotor pitch change horn/pitch change link assembly for condition and security of installation.	_____	SDB 0125
15. BATTERY AREA		
A. Battery		
(1) Inspect the battery as required in accordance with the manufacturer's instructions.	_____	Table 2-2
B. Battery Tray (Forward or Aft Installation):		
(1) Inspect the battery tray, hold down hardware, and surrounding area for evidence of electrolyte leakage and other damage.	_____	
(2) Inspect the battery cables and other electrical components/wiring in the area for corrosion, condition, and security of installation.	_____	
(3) Inspect the battery vent lines for obstructions, condition, and security of installation.	_____	
16. ELECTRICAL SYSTEMS		
A. Inspect the wiring harness and terminal strips for condition and security of installation.	_____	
B. Inspect the external power system for proper operation, condition and security of installation.	_____	
C. Inspect the cockpit/instrument lighting for proper operation, condition, and security of installation.	_____	
D. Inspect the landing, anti-collision, and position light systems for proper operation, condition, and security of installation.	_____	
E. Inspect the caution and warning systems for proper operation, condition, and security of installation.	_____	

UNCONTROLLED COPY WHEN DOWNLOADED OR PRINTED

Visit www.enstromhelicopter.com for instructions to order an original manual and to register for email notification of updates.

100 HOUR/ANNUAL INSPECTION GUIDE		
INITIAL EACH ITEM AFTER ACCOMPLISHMENT	**INITIAL**	**REF**
F. Inspect the cyclic trim system for proper operation, condition, and security of installation.	_____	Para. 12-9
G. Inspect the fuel boost pump for proper operation.	_____	
H. Cycle all switches and circuit breakers and inspect for proper operation, condition, and security of installation.	_____	
I. Inspect all other electrical equipment not specifically covered by this checklist for proper operation, condition, and security of installation.	_____	
16.1 OPTIONAL EQUIPMENT WITH MAINTENANCE MANUAL SUPPLEMENTS		
A. Avionic Systems:		
(1) Inspect the applicable Avionic System(s) I/A/W Maintenance Manual Supplement 1	_____	Maintenance Manual Supplement 1

UNCONTROLLED COPY WHEN DOWNLOADED OR PRINTED

Visit www.enstromhelicopter.com for instructions to order an original manual and to register for email notification of updates.

100 HOUR/ANNUAL INSPECTION GUIDE		
INITIAL EACH ITEM ACCOMPLISHMENT	**INITIAL**	**REF**
18. POST INSPECTION		
A. Lubrication and Servicing:		Para. 13-11
(1) Ensure all required items have been lubricated and serviced per the maintenance manual lubrication and servicing charts.	_____	
B. Correct all discrepancies and install all cowling, access panels, doors, and other items removed for this inspection.	_____	Para. 8-1, D, (19)
C. Operation Check:		
(1) Engine Run-Up:		
Check engine/post flight requirements in the Textron-Lycoming O, HO, AIO, HIO, TIO-360 Series Operator's Manual. Run the aircraft I/A/W the Enstrom F-28F, 280F, or 280FX Rotorcraft Flight Manual. Check the engine instruments, fuel quantity and flow systems for proper operation.	_____	
(2) Flight Control Check:		
Whenever disassembly of the flight controls, especially the removal of the main rotor hub, has been accomplished, it is recommended that a test flight be performed. See the Enstrom F-28F/280F Series Maintenance Manual for full details.	_____	Para. 8-1, D, (18)
WARNING **Test flight to be performed by authorized personnel only.**		
(3) Avionics and Flight Instruments: Check operation.	_____	
D. Post Operation Check:		
(1) Inspect the engine compartment for oil and fuel leaks.	_____	Para. 13-2, D, (1)
E. Enter the inspection compliance in the airframe and engine logbooks as applicable.	_____	
F. Perform a maintenance test flight.		
WARNING **Test flight to be performed by authorized personnel only.**	_____	

UNCONTROLLED COPY WHEN DOWNLOADED OR PRINTED

Visit www.enstromhelicopter.com for instructions to order an original manual and to register for email notification of updates.

4-52 200 HOUR INSPECTION GUIDE – PERIODIC INSPECTION

AIRCRAFT REGISTRATION NUMBER:		SIGNATURE:	
AIRCRAFT SERIAL NUMBER:		DATE:	
HOURS: Engine:	Flight:		

200 HOUR INSPECTION GUIDE

INITIAL EACH ITEM AFTER ACCOMPLISHMENT	INITIAL	REF
1. GENERAL INSPECTION		
A. Perform a complete 100 Hour/Annual Inspection.	_____	
2. MAIN ROTOR ASSEMBLY		
A. Inspect the main rotor retention assemblies for:		
(1) Evidence of ratcheting or binding in the feathering bearings.	_____	
(2) Remove the retention assembly dust cover:		Fig. 9-4,(18)
(a) Inspect the T-T strap retention block (lug) and pin assembly for condition and security.	_____	Fig. 9-4.1 (8)
(b) Evidence of seal leakage.	_____	
(3) Evidence of a sheared roll pin at the hinge pin.	_____	Fig. 9-3,(7)
(4) Evidence of ratcheting or binding of the flapping bearings.	_____	Fig. 9-2,(22)
(5) Proper security of the hinge pin locking tang washer.	_____	Fig. 9-3,(4)

UNCONTROLLED COPY WHEN DOWNLOADED OR PRINTED

Visit www.enstromhelicopter.com for instructions to order an original manual and to register for email notification of updates.

4-53 400 HOUR INSPECTION GUIDE – PERIODIC INSPECTION

AIRCRAFT REGISTRATION NUMBER:		SIGNATURE:	
AIRCRAFT SERIAL NUMBER:		DATE:	
HOURS: Engine:	Flight:		

400 HOUR INSPECTION GUIDE		
INITIAL EACH ITEM AFTER ACCOMPLISHMENT	**INITIAL**	**REF**
1. GENERAL INSPECTION A. Perform a complete 100 Hour/Annual Inspection.	_____	
2. ENGINE A. Inspect the engine in accordance with the Textron-Lycoming O, HO, AIO, HIO, TIO-360 Series Operator's Manual (60297-12).	_____	

UNCONTROLLED COPY WHEN DOWNLOADED OR PRINTED

Visit www.enstromhelicopter.com for instructions to order an original manual and to register for email notification of updates.

4-54 SPECIAL SCHEDULED INSPECTION GUIDE – PERIODIC INSPECTION

AIRCRAFT REGISTRATION NUMBER:		SIGNATURE:	
AIRCRAFT SERIAL NUMBER:		DATE:	
HOURS: Engine:	Flight:		

SPECIAL SCHEDULED INSPECTION GUIDE

INITIAL EACH ITEM AFTER ACCOMPLISHMENT	INITIAL	REF
1. MAIN ROTOR TRANSMISSION		
A. Retorque the aft pinion nut 20-25 hours after installation.	_____	Para. 11-7, H, (4)
2. PYLON ASSEMBLY		
A. Inspect the pylon I/A/W SIL 0173 every 10 hours time in service for aircraft used for agricultural or external load operations during that time period.	_____	SIL 0173
3. HORIZONTAL STABILIZER		
A. For aircraft F-28F S/N 744 and subsequent and all 280FX, remove and disassemble the horizontal stabilizers and spar at the first 1200 hours of service and every 1200 hours of service thereafter for the inspection of the following:		Section 8, Para. 8-14, Para. 8-16
NOTE: Refer to Section 8, Paragraph 8-16 for complete disassembly, assembly, and inspection criteria. For models manufactured before 1986, refer to Section 8, Paragraph 8-14		
(1) Visually inspect all components for damage, cracks, loose rivets, and security of installation.	_____	Tables 8-2 through 8-4
(2) Fluorescent inspect (Zyglo) or visually inspect with a 10 power glass the spar fitting, attachment rivets, bulkhead and vertical endplate attachments.	_____	Tables 8-2 through 8-4
(3) Magnetic particle inspect the horizontal stabilizer steel spar.	_____	Tables 8-2 through 8-4
4. MAIN ROTOR BLADES		
A. Remove the main rotor blades and reapply corrosion prevention compound (CPC) a minimum of once every two years.	_____	Para. 4-90
NOTE: Shorter intervals may apply to aircraft operating in moderate and severe corrosion environments, as identified by SIL 0169.		

UNCONTROLLED COPY WHEN DOWNLOADED OR PRINTED

Visit www.enstromhelicopter.com for instructions to order an original manual and to register for email notification of updates.

4-55 SPECIAL INSTRUCTIONS

4-56 General Information – Special Instructions

NOTE: Refer to the applicable Textron-Lycoming Technical Publications for special inspections applicable to the engine.

A. This section contains guidelines for performing the required inspections, by qualified maintenance personnel, after experiencing any of the following occurrences: main rotor blade and/or tail rotor strikes, hard landing, main rotor overspeed, chip indications on the main rotor or tail rotor transmission, engine overboost, and engine overspeed. It should be emphasized that other parts and/or adjacent components not listed may also be damaged, depending on the severity of the incident. Therefore, this guide should not be considered absolute and should be expanded as required by the inspecting maintenance personnel, as the occurrence may require, per the appropriate sections of this manual.

B. All aluminum and steel components must be inspected by the following processes after visual inspection has revealed a possible defect or as noted in the special inspections:

(1) Aluminum machined or cast components are to be inspected by liquid penetrant inspection (ASTM E165 or equivalent).

(2) Aluminum sheet metal components are to be inspected by liquid penetrant inspection (ASTM E165 or equivalent).

(3) Steel components are to be inspected by magnetic particle inspection (ASTM E1444 or equivalent).

C. All parts and components that may be affected by the specific occurrence are to be given a complete inspection for possible damage.

4-57 Main Rotor Blade Strike/Sudden Stoppage (Minor) – Special Instruction

NOTE: The following inspections are mandatory.

A. Blade damage does not exceed damage as defined in paragraph 9-9, and shows no visible kinks, ripples in the skin or the trailing edge. Perform the following:

(1) Repair the blade I/A/W paragraph 9-10.

(2) Refer to the latest revision of Textron-Lycoming Service Bulletin 533 for the recommended engine inspection.

B. Blade damage exceeds limits of paragraph 9-9, but has not contacted the airframe or other rigid object and shows no visible kinks, ripples in the skin or trailing edge. Perform the following:

UNCONTROLLED COPY WHEN DOWNLOADED OR PRINTED

Visit www.enstromhelicopter.com for instructions to order an original manual and to register for email notification of updates.

(1) Replace the blade(s).

(2) Refer to the latest revision of Textron-Lycoming Service Bulletin 533 for the recommended engine inspection.

(3) Check the main rotor shaft run out. Maximum allowed is .012 inches/.305 mm FIM.

(4) Inspect the tail rotor driveshaft taper pins and taper pin holes (Para. 10-6, H) and flex packs (Para. 10-6, C).

NOTE: If the main rotor shaft run out, taper pins, or flex packs do not meet inspection requirements, proceed to paragraph 4-58.

4-58 Main Rotor Blade Strike/Sudden Stoppage (Major) – Special Instruction

A. Obvious blade damage exceeding the limits of paragraph 9-9. Perform the following:

(1) Replace the damaged blade(s) and inspect the remaining blade(s).

(2) Remove the main rotor transmission including the upper pulley and tail rotor drive shaft hub and return to Enstrom Helicopter Corporation for inspection and overhaul/replacement.

(3) Remove the main rotor hub and inspect by liquid penetrant method (ASTM E165 or equivalent) and in accordance with the inspection tables in Para. 9-1, D, or return to Enstrom Helicopter Corporation for inspection and overhaul/replacement.

(4) Inspect all flight control push-pull rods and torque tubes for sheared/damaged rivets at the fittings, damaged rod ends, or sheared/damaged roll pins.

(5) Inspect all flight control bellcranks for buckling and elongated bolt holes.

(6) Inspect the lower swashplate for warped or cracked casting and for bent or damaged guidetubes in the upper swashplate. Inspect the tie rod and universal rod for straightness. Inspect the bolt holes for elongation.

(7) Replace all tail rotor driveshaft taper pins.

(8) Inspect the tail rotor driveshaft for damage at the taper pin holes.

(9) Magnetic particle inspect (ASTM E1444 or equivalent) the tail rotor driveshaft.

(10) Inspect the pylon structure at the gearbox mounting areas for broken or bent tubes. Check the trueness of the four gearbox attachment points.

(11) Inspect all components of the drive system.

(12) Refer to the latest revision of Textron-Lycoming Service Bulletin 533 for the recommended engine inspection.

UNCONTROLLED COPY WHEN DOWNLOADED OR PRINTED

Visit www.enstromhelicopter.com for instructions to order an original manual and to register for email notification of updates.

4-59 Tail Rotor Blade Strike/Sudden Stoppage – Special Instruction

A. Strike tab missing but no physical damage to the tail rotor blade(s).

(1) Inspect the tail rotor driveshaft for damage at the forward and aft coupling taper pin locations.

(2) Inspect the taper pins, flex packs, and drive shaft hubs at the forward and aft coupling locations (Para. 10-6, C).

(3) Check the runout (TIR) of the output shaft (Para. 10-5, H).

(4) If no damage is found, make a log book entry and notify Enstrom Helicopter Corporation to order replacement strike tabs.

(5) If damage is found, proceed to the following paragraph.

B. Obvious physical damage to the tail rotor blade. Perform the following:

(1) Remove the tail rotor transmission with the tail rotor pitch controls, the input drive hub, and the tail rotor assembly.

(a) Remove the tail rotor pitch controls and inspect in accordance with the inspection tables in Para. 10-4, C.

(b) Return the tail rotor transmission to Enstrom Helicopter Corporation for inspection and overhaul/replacement.

(c) Inspect the tail rotor assembly in accordance with Table 10-1.

(2) Replace all tail rotor driveshaft taper pins.

(3) Inspect the tail rotor driveshaft for damage at the forward and aft taper pin holes.

(4) Inspect the taper pin hole in the main rotor transmission pinion for complete or partial failure. If damage is found, return the main rotor transmission to Enstrom Helicopter Corporation for overhaul/replacement.

(5) Inspect all coupling hubs and the pinion shaft by liquid penetrant method (ASTM E165 or equivalent).

(6) Magnetic particle (ASTM E1444 or equivalent) inspect the tail rotor driveshaft.

(7) Inspect the hangar bearing housings and attachments.

(8) Inspect the tail rotor control cables and pulley attachments.

(9) Inspect the tail rotor pedal push-pull rods and bellcranks.

UNCONTROLLED COPY WHEN DOWNLOADED OR PRINTED

Visit www.enstromhelicopter.com for instructions to order an original manual and to register for email notification of updates.

4-60 Hard Landing – Special Instruction

A. In the event of a hard landing which may or may not be associated with a main or tail rotor strike, perform the following:

(1) Inspect the forward and aft crosstube for bends or bowing. Replace the crosstube if bent or bow is greater than 0.5 inches/13 mm. It will be necessary to hoist the aircraft or remove the crosstubes to obtain a measurement.

(2) Inspect the forward and aft crosstube attachment clamps for damage and cracks. Inspect all fittings and bolt holes for elongation.

(a) Perform NDT inspection in the event of a moderate or severe hard landing.

NOTE: Moderate: A moderate hard landing shows deformation of the cross tubes up to but not beyond limits (0.5 inches/13 mm) or damage to the other landing gear components or rotables.

Severe: A severe hard landing shows obvious damage to the landing gear components, cross tube deformation beyond limits (0.5 inches/ 13 mm), and/or rotable damage. Physical injury to the pilot or the passengers is possible.

NOTE: Met-L-Chek Dye Penetrant Kit, Magnaflux Spotcheck Kit, or equivalent NDT method are acceptable.

1 Remove the cross tube assemblies.

2 Remove clamps from the cross tubes.

3 Remove the paint from the clamps and inspect for cracks using dye penetrant method or magnetic particle inspection. Follow the manufacturer's instructions.

a Positive indication – Reject the clamp and replace with an airworthy clamp.

b Negative indication – Clamp may be returned to service.

4 Apply epoxy primer (MIL-PRF-23377) to any bare metal surfaces of the clamp.

5 If removed from the cross tube, reinstall the clamps. Leave the pylon clamp attachment hardware loose until after the cross tube is attached to the pylon.

NOTE: Cross tubes with bows up to 0.5 inches/13 mm are serviceable and may be flipped over and reinstalled.

6 Reinstall the cross tubes assemblies. Torque all hardware.

a Center strut attachment, 60 in-lb/6.8 Nm (Figure 8-7, Detail C)

b Oleo assembly attachment, torque in accordance with Para. 8-9, D, (5).

(3) Inspect the landing gear leg assemblies for distortion or deformation. Inspect all fittings and bolt holes for elongation. Inspect all welds and gussets for cracks.

UNCONTROLLED COPY WHEN DOWNLOADED OR PRINTED

Visit www.enstromhelicopter.com for instructions to order an original manual and to register for email notification of updates.

(4) Inspect the skid tubes for damage and straightness. Inspect all hardware attachment holes for elongation or tears.

(5) Inspect the oleos for damage, freedom of movement, and leakage.

(6) Inspect the tailcone to pylon, main rotor transmission to pylon, engine to pylon, crosstube to pylon, and cabin to pylon attachment points for deformation or hardware failures.

(7) Inspect the keel structure edges, beams, lightening holes, and intercostals for buckling or deformation. Closely inspect the keel structures for interference or contact with flight control mechanisms.

(8) Check the main rotor shaft run out. Maximum allowed is 0.012 inch/0.305 mm FIM.

(9) Check the main rotor transmission mount bolt torque. If torque is lost, replace the hardware or remove and magnetic particle inspect the hardware.

(10) Inspect the main rotor transmission mount lugs with liquid penetrant method.

(11) Refer to the latest revision of Textron-Lycoming Service Bulletin 533B for the recommended engine inspection.

4-61 Main Rotor Overspeed – Special Instruction

A. Overspeeds from 385-405 rpm for 5 seconds or less. No inspection required.

NOTE: If any damage is found, remove the main rotor hub and return to Enstrom Helicopter Corporation for inspection and overhaul/replacement.

B. Overspeeds from 385-405 rpm for more than 5 seconds or overspeeds from 406-420 rpm. Perform the following:

(1) Remove the main rotor blades and inspect flapping axis for proper drag, notchiness, and freedom of movement.

(2) Inspect the main rotor blade retention for any deformation.

(3) Retention assembly:

(a) If equipped with lamiflex bearings, inspect the lamiflex bearings for deformation, proper thickness, delamination or extruded brass. Inspect the nylatron strap for any damage or unusual wear.

(b) If equipped with tension-torsion (TT) straps, inspect the TT straps and pins (grip assembly) in accordance with Table 9-2.1.

(4) Inspect the main rotor spindles for pulled or distorted threads.

C. Overspeeds exceeding 420 rpm. Perform the following:

(1) Remove the main rotor hub and inspect by liquid penetrant inspection and in accordance with the inspection tables in Para. 9-1, D, or return to Enstrom Helicopter Corporation for inspection and overhaul/replacement.

UNCONTROLLED COPY WHEN DOWNLOADED OR PRINTED

Visit www.enstromhelicopter.com for instructions to order an original manual and to register for email notification of updates.

4-62 Main Rotor or Tail Rotor Transmission Chip Indication – Special Instruction

NOTE: New or recently overhauled transmissions will often make a magnetic "fuzz" which will collect on the magnetic plug as gray sludge. This is normal and may be cleaned off the plug. The plug may then be reinstalled and the helicopter returned to service. If any main rotor transmission chips are found which are larger than 0.0625 inch/1.59 mm in cross-section or if any tail rotor transmission chips are found which are larger than 0.035 inch/0.9 mm in cross-section, contact Enstrom Customer Service Department and discontinue use until further instructions are received from Enstrom Customer Service Department.

A. Main rotor transmission chip indication. Perform the following:

(1) Inspect the chip detector for accumulation of metal particles as follows:

(a) Main rotor transmission metal particles, flakes, or slivers exceeding 0.0625 inch/1.59 mm: Contact Enstrom Customer Service Department and discontinue use until further instructions are received from Enstrom Customer Service Department.

NOTE: Sludge normally will not cause a chip indication by itself. There is normally a small particle, flake, or sliver on the detector also.

(b) Sludge (a mixture of oil and fine metal particles resulting from normal gear operation): Clean the detector and return the transmission to service.

(2) If the indication was caused by sludge or a particle, flake, or sliver not exceeding the maximum size, return the transmission to service and annotate the chip indication and results in the aircraft maintenance records.

B. Tail rotor transmission chip indication. Perform the following:

(1) Remove the tail rotor assembly and remove the flex pack.

(2) Turn the gearbox by hand using the output shaft.

(3) Inspect the chip detector for accumulation of metal particles as follows:

(a) Tail rotor transmission metal particles, flakes, or slivers exceeding .035 inch/.9mm: Contact Enstrom Customer Service Department and discontinue use until further instructions are received from Enstrom Customer Service Department.

NOTE: Sludge normally will not cause a chip indication by itself. There is normally a small particle, flake, or sliver on the detector also.

(b) Sludge (a mixture of oil and fine metal particles resulting from normal gear operation): Clean the detector and return the transmission to service.

C. Three main rotor or two tail rotor transmission chip indications occur within 10 flying hours. Perform the following:

NOTE: Check the aircraft inspection records for any annotations about the condition of the main rotor transmission ring and pinion gears or the tail rotor transmission input and output gears.

UNCONTROLLED COPY WHEN DOWNLOADED OR PRINTED

Visit www.enstromhelicopter.com for instructions to order an original manual and to register for email notification of updates.

(1) Drain the oil from the transmission and inspect the ring and pinion gears (main rotor transmission) or the input and output gears (tail rotor transmission) for cracks, excessive pitting, excessive spalling, or "hard wear" lines.

(2) Remove the tail rotor assembly from the tail rotor transmission output shaft and the aft tail rotor drive shaft flex plate assembly. Turn the tail rotor transmission output shaft by hand. If indications of a rough bearing are felt, the transmission must be replaced.

NOTE: If the gearbox is to be returned to Enstrom Service, do not clean the metal from the chip detector.

(3) If none of the above conditions are found, flush and service the transmission (main rotor, Para. 4-13.1; tail rotor, Para. 4-16.1) and return to service. If two chip indications occur within the next 10 flying hours, repeat the flush and servicing procedure. If two additional indications occur within the next 10 flying hours, contact Enstrom Helicopter Corporation for further instructions.

UNCONTROLLED COPY WHEN DOWNLOADED OR PRINTED

Visit www.enstromhelicopter.com for instructions to order an original manual and to register for email notification of updates.

4-63 Engine Overboost – Special Instruction

A. Inspect the engine in accordance with the latest revision of Textron-Lycoming Service Bulletin 592.

4-64 Engine Overspeed – Special Instruction

A. Inspect the engine in accordance with the latest revision of Textron-Lycoming Service Bulletin 369.

NOTE: Perform the appropriate main rotor overspeed inspection if required.

4-65 MAINTENANCE GROUND RUN

A. General

(1) Perform a maintenance ground run after conducting a periodic inspection or maintenance action that will require operation of the aircraft to verify satisfactory performance of the aircraft.

(2) The periodic inspection or maintenance action will determine the extent of the post maintenance ground run.

B. Flight controls

NOTE: The following checks are performed before starting the engine.

(1) Position lateral and fore/aft trim motors to the neutral position.

(2) Move the cyclic stick around the cyclic stop in the floor. The stick must remain against the stop through the circle. If binding or interference is detected, re-check the basic rigging.

(3) Move the fore/aft trim to full forward position and move the cyclic stick full aft. Stick should contact the cyclic stop. Reverse the trim motor and stick positions and check that stick contacts the cyclic stop.

(4) Repeat step (3) using the lateral trim motor and moving the stick in the lateral direction.

C. Inspect engine operation for (1500 rpm idle):

(1) Oil pressure

(2) Alternator

(3) Engine compartment for oil or fuel leakage

(4) Magnetos for:

(a) Left

(b) Right

(c) Off

(5) Mixture control for idle cut-off operation.

UNCONTROLLED COPY WHEN DOWNLOADED OR PRINTED

Visit www.enstromhelicopter.com for instructions to order an original manual and to register for email notification of updates.

D. Inspect rotor engagement for (1500 rpm idle):

(1) Smoothness of operation and positive over-center position (light)

(2) Proper clutch handle stowage

(3) Track of belt on idler roller

E. Inspect the following instruments for “green” operation:

(1) Oil pressure

(2) Oil temperature

(3) Cylinder head temperature

(4) Main gearbox temperature

(5) Tach needles married

F. Inspect ground run for (3050 rpm):

(1) Manifold pressure (17.5” to 19”)

(2) Operation of one way clutch

(3) Rotor blades for out of track

(4) Magneto check (left – right)

(5) Proper operation of all instruments

(6) Proper operation of “press-to-test” lights

(7) Proper operation of all avionics

G. Post Ground Run:

(1) Shut the aircraft down I/A/W the Rotorcraft Flight Manual.

(2) Record any discrepancies found during the ground run and notify maintenance personnel for corrective action.

UNCONTROLLED COPY WHEN DOWNLOADED OR PRINTED

Visit www.enstromhelicopter.com for instructions to order an original manual and to register for email notification of updates.

4-66 GROUND HANDLING

4-67 Ground Handling Wheels

A. Each skid tube is equipped with a manually operated ground handling wheel assembly. The ground handling wheels shall be in the raised position for flight or ground operations with the engine running and the rotor systems turning. The wheels should also be in the raised position when the aircraft is parked.

CAUTION: PUSHING ON THE NOSE OF THE HELICOPTER MAY CAUSE THE CABIN NOSE TO DEFORM THEREBY WEAKENING THE CABIN STRUCTURE AND CAUSING EXTENSIVE REPAIR. USE CAUTION WHEN PUSHING ON THE NOSE TO MOVE THE AIRCRAFT BACKWARDS.

B. Use the following procedure to lower the ground handling wheels:

(1) Support the aircraft at the tail rotor guard.

WARNING: ENSURE THE WHEEL BAR HANDLE IS COMPLETELY INSTALLED ONTO THE GROUND HANDLING WHEEL LUG. DO NOT LET GO OF THE WHEEL BAR HANDLE WHILE LOWERING OR RAISING THE GROUND HANDLING WHEELS.

(2) Insert the wheel bar handle onto the lug on the ground handling wheel with the handle towards the aft end of the aircraft.

(3) Remove lock pin from the ground handling wheel.

(4) With a steady motion, rotate wheel bar handle 180° towards the front of the aircraft and install lock pin when holes line up.

(5) Remove the wheel bar handle from the ground handling wheel lug.

C. Use the following procedure to raise the ground handling wheels:

(1) Support the aircraft at the tail rotor guard.

WARNING: ENSURE THE WHEEL BAR HANDLE IS COMPLETELY INSTALLED ONTO THE GROUND HANDLING WHEEL LUG. DO NOT LET GO OF THE WHEEL BAR HANDLE WHILE LOWERING OR RAISING THE GROUND HANDLING WHEELS.

(2) Insert the wheel bar handle onto the lug on the ground handling wheel with the handle towards the front end of the aircraft.

UNCONTROLLED COPY WHEN DOWNLOADED OR PRINTED

Visit www.enstromhelicopter.com for instructions to order an original manual and to register for email notification of updates.

(3) Remove lock pin from the ground handling wheel.

(4) With a steady motion, rotate wheel bar handle 180° towards the aft end of the aircraft and install lock pin when holes line up.

(5) Remove the wheel bar handle from the ground handling wheel lug.

4-68 EXTERNAL POWER

CAUTION: ENSURE THE EXTERNAL POWER SOURCE VOLTAGE RATING (14 VOLTS OR 28 VOLTS) MATCHES THE HELICOPTER ELECTRICAL SYSTEM BEFORE APPLYING EXTERNAL POWER.

A. Turn the helicopter MASTER and ALTERNATOR switches OFF.

B. Turn the external power source OFF.

C. Plug the external power source cable securely into the external power receptacle.

D. Turn the external power source ON.

E. Turn the helicopter MASTER switch ON.

4-69 PARKING

A. Raise the ground handling wheels allowing the helicopter to rest on its skids.

B. Install the main rotor tie down.

C. Install static ground.

D. Install the main rotor hub cover.

E. Install the tail rotor gearbox and hub cover.

4-70 LEVELING

WARNING: DO NOT CLIMB ON OR ENTER THE AIRCRAFT WHILE IT IS BEING LEVELED.

NOTE: The tail of the aircraft may have to be supported to maintain the aircraft in a level attitude.

A. Level the aircraft longitudinally by placing a level on the leveling location on the longitudinal pylon tube located on the left side of the pylon assembly. Adjust the attitude of the aircraft by using the ground handling wheels and/or shoring materials and by raising or lowering the tail of the aircraft. Level the aircraft laterally by placing the level on the cockpit floor and adjust the shoring materials under the skid tubes as required.

UNCONTROLLED COPY WHEN DOWNLOADED OR PRINTED

Visit www.enstromhelicopter.com for instructions to order an original manual and to register for email notification of updates.

4-71 HOISTING

NOTE: Refer to Fig. 4-3.

A. If the main rotor hub is installed, install the lifting sling (T-0011) so that the arms are between the pitch arm and the blade retention assembly, over the lead/lag retaining nut, and outboard of the main rotor damper rod-end. The sling arms are long enough to be double rapped if preferred.

B. If the main rotor hub is removed, install the lifting eye (T-0017) onto the main rotor mast.

WARNING: THE LIFTING DEVICE MUST HAVE A LIFTING RATING EQUAL TO OR GREATER THAN THE ACTUAL WEIGHT OF THE AIRCRAFT TO BE HOISTED.

C. Connect a suitable lifting device to the lifting sling or eye.

D. Station a person at the tail rotor guard to steady the aircraft when hoisted. If lifting beyond reach from the ground, two people and two steadying ropes will be necessary.

E. Slowly hoist the aircraft using a steady lifting force.

4-72 CLEANING

4-73 Exterior – Cleaning

NOTE: The exterior of the aircraft is painted with a high quality paint. Proper maintenance of this finish will provide corrosion protection as well as an attractive finish.

NOTE: Do not wash the aircraft using pressure washing equipment.

A. Wash the exterior as follows:

(1) Check the security of all doors and access panels before starting the washing operation.

(2) Flush the entire aircraft free of dirt.

NOTE: Avoid direct spraying of the main rotor hub, tail rotor assembly, and tail rotor driveshaft bearings to prevent the loss of lubricant. These areas should be purged with grease after washing to eliminate any moisture.

UNCONTROLLED COPY WHEN DOWNLOADED OR PRINTED

Visit www.enstromhelicopter.com for instructions to order an original manual and to register for email notification of updates.

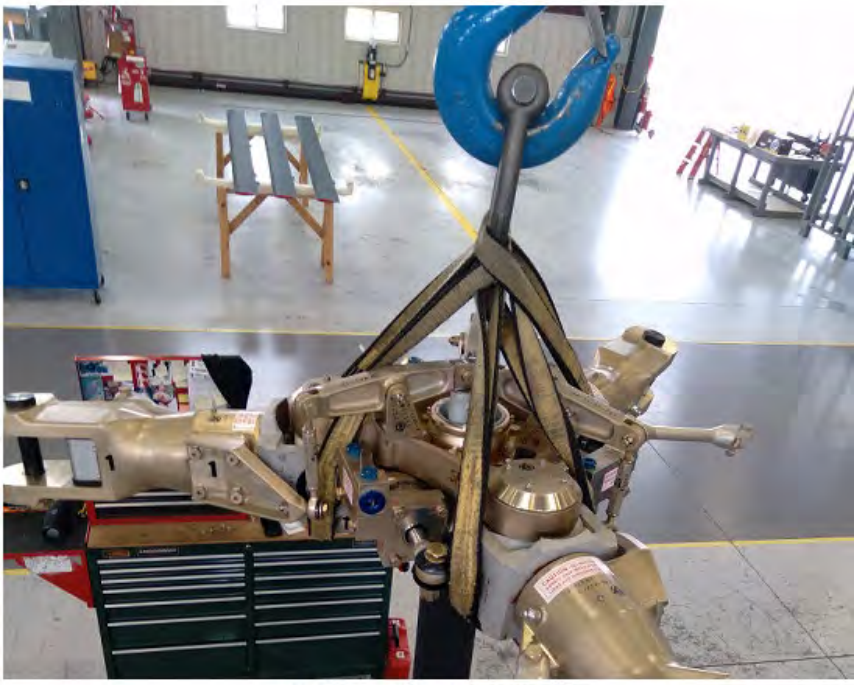

Lifting Sling Installation



Lifting Sling Arm Routing

Figure 4-3. Lifting Sling Installation

UNCONTROLLED COPY WHEN DOWNLOADED OR PRINTED

Visit www.enstromhelicopter.com for instructions to order an original manual and to register for email notification of updates.

(3) Using a soap and water solution and a soft cloth pad, wash a specific area using a circular motion.

(4) Flush the washed area immediately.

(5) Repeat steps c and d until the entire aircraft is clean.

(6) Rinse with clear water and dry with a chamois.

B. Wax the exterior as follows:

(1) Clean the aircraft exterior as described in the washing procedure.

(2) Using a soft cloth, apply a good quality paste wax to the painted exterior using a circular motion.

(3) Polish the waxed area to a high luster using a clean and dry soft cloth.

4-74 Interior – Cleaning

NOTE: Do not use a solvent type cleaner to clean the inside of the cabin shell.

A. Clean the interior as follows:

(1) Clean the dirt and dust from the cabin using a small broom or brush.

(2) Vacuum the interior to remove any remaining dirt.

(3) Use a good quality upholstery cleaner to remove dirt and grease from the seat cushions and the floor covering.

4-75 Plexiglas – Cleaning

A. Wash the Plexiglas using your bare hand or a clean soft cloth and a mild soap and water solution. Rinse with clean water.

B. Dry the surface with a soft, clean cloth or tissue and polish it with a windshield cleaner especially approved for use on aircraft transparent plastics.

CAUTION: DO NOT USE COARSE ABRASIVE TYPE SOAPS AS THEY CAN CAUSE FINE SCRATCHES IN THE PLEXIGLASS.

C. Removal of fine scratches from the Plexiglas is accomplished by polishing and waxing the glass using Meguiar's Mirror Glaze - Plastic Cleaner MGH-17.

UNCONTROLLED COPY WHEN DOWNLOADED OR PRINTED

Visit www.enstromhelicopter.com for instructions to order an original manual and to register for email notification of updates.

4-76 AIRCRAFT PRESERVATION AND STORAGE

4-77 General – Aircraft Preservation and Storage

A. Aircraft that see low usage or are stored for extended periods exhibit an accelerated rate of corrosion damage. Special attention should be given to aircraft inactive in a corrosive atmosphere (coastal, high humidity, air pollution, or sandy areas) to assure components remain in a serviceable condition.

B. The following maintenance procedures are categorized in terms of aircraft with low usage and those scheduled to be inactive for an extended period. This information is intended to cover both hangared and outdoor conditions unless otherwise noted, and is subject to owner/operator judgment regarding the helicopter's operating environment, and should be considered in addition to the normal servicing requirements.

NOTE: Wash and wax the helicopter prior to any type of storage.

4-78 Low Usage – Aircraft Preservation and Storage

NOTE: Aircraft flown for short periods several times a month.

NOTE: Preserve the engine I/A/W the applicable Textron-Lycoming Technical Publication if warranted by local corrosive conditions.

A. Ground run the aircraft every 14 days until normal operating temperatures for the engine are obtained.

B. Position the main rotor blades so that the tail rotor assembly is horizontal to the earth. Tie down the main rotor blades with the collective locked halfway up to relieve the steady load on the lamiflex bearings.

C. Install the main rotor hub and tail rotor assembly covers.

D. Protect the windshields and interior equipment with suitable dust covers and/or solar shields.

NOTE: If the interior temperature of the cabin exceeds 150°F, ventilate the cabin by opening the doors or vents.

E. Cover the pitot and static air vents.

UNCONTROLLED COPY WHEN DOWNLOADED OR PRINTED

Visit www.enstromhelicopter.com for instructions to order an original manual and to register for email notification of updates.

F. Wash and wax the aircraft monthly to remove contaminants.

G. Prior the next flight, complete the following:

(1) Remove all covers and tiedowns.

(2) Perform a preflight inspection.

NOTE: When inspecting oil levels, inspect for evidence of water contamination.

(3) If preserved, depreserve the engine I/A/W the applicable Textron-Lycoming Technical Publication.

4-79 Storage Up to 45 Days – Aircraft Preservation and Storage

A. Complete steps A through F of paragraph 4-78.

B. Disconnect the battery.

C. Remove the main rotor blades.

NOTE: Store the main rotor blades in a horizontal position on wood racks cut out to the contour of the leading edge of the blades. Use care in handling the blades to prevent damage to the blades and trim tabs.

D. Return the aircraft to service using the following procedures:

(1) Remove all covers and tiedowns.

(2) Connect the battery.

(3) Install the main rotor blades.

(4) Perform a preflight inspection.

NOTE: When inspecting oil levels, inspect for evidence of water contamination.

(5) Lubricate the aircraft I/A/W the 50 Hour requirements.

(6) Depreserve the engine I/A/W the applicable Textron-Lycoming Technical Publication.

UNCONTROLLED COPY WHEN DOWNLOADED OR PRINTED

Visit www.enstromhelicopter.com for instructions to order an original manual and to register for email notification of updates.

4-80 Storage from 45 Days to 6 Months – Aircraft Preservation and Storage

A. Complete Steps A through C of Paragraph 4-79.

B. Remove the battery and store in a cool dry area. Clean the battery shelf if required (AC43.13-1B).

NOTE: The aircraft may require an annual inspection.

C. Return the aircraft to service following the procedures in Step D of Paragraph 4-79.

4-81 Storage for Longer Than 6 Months – Aircraft Preservation and Storage

A. Complete Steps A and B of Paragraph 4-80.

B. Hangar the aircraft.

C. Return the aircraft to service using the following procedures:

(1) Remove all covers, tiedowns, and shields.

(2) Service the battery I/A/W the manufacturer's instructions. Install and connect the battery.

(3) Install the main rotor blades.

(4) Perform a 100 hour periodic inspection and lubricate I/A/W the 100 hour requirements.

NOTE: The aircraft may require an annual inspection.

(5) Depreserve the engine I/A/W the applicable Textron-Lycoming Technical Publication.

UNCONTROLLED COPY WHEN DOWNLOADED OR PRINTED

Visit www.enstromhelicopter.com for instructions to order an original manual and to register for email notification of updates.

4-82 PREVENTIVE MAINTENANCE FOR CORROSION CONTROL

4-83 General Information – Preventive Maintenance for Corrosion Control

The airframe is fabricated of high strength aluminum and steel alloys and should be inspected regularly for signs of corrosion. Any areas where the protective finishes may have been scuffed, scratched, chipped, or worn off should be treated temporarily to control the onset of corrosive action. Then at the earliest convenience a permanent refinish of the area should be accomplished. Another very important step in any corrosion prevention program is regularly scheduled washing and waxing of the aircraft surfaces.

It is extremely important that the main rotor and tail rotor blade coatings be maintained and protected against oxidation, erosion, and atmospheric residues which are continually attacking these components during their service life. Once this coating is breached and corrosive action is allowed to propagate unchecked, premature bond line corrosion will occur resulting in early retirement of these components. Refer to Paragraph 4-90 for the corrosion prevention compound application procedure for the main rotor blades. Refer to the appropriate paragraphs in Section 9 of this manual for the inspection and repair procedures for the main and tail rotor blades. In coastal areas or wherever the air has a high moisture content, blade tape can be installed on the leading edge of the main rotor blades to help prevent the leading edge and bond line corrosion from occurring. In coastal areas, it is recommended that the blade tape be installed when the aircraft is placed into service. Refer to the appropriate paragraphs in Section 9 of this manual for the installation and repair procedures for blade tape.

4-84 Scheduled Field Preventive Maintenance Program

NOTE: This procedure is intended for the complete helicopter; however, give special attention given the main and tail rotor blades.

NOTE: Aircraft based in or near heavy industrial and/or metropolitan areas with heavy atmospheric pollution should use procedure "A" below.

NOTE: Do not wash the aircraft using pressure washing equipment.

A. Aircraft that are operated over salt water or coastal regions. Use the following procedures:

(1) Thoroughly flush the aircraft with fresh water daily.

UNCONTROLLED COPY WHEN DOWNLOADED OR PRINTED

Visit www.enstromhelicopter.com for instructions to order an original manual and to register for email notification of updates.

(2) Wash the aircraft with mild soap and fresh water weekly.

NOTE: Use a good quality paste wax.

(3) Wax the aircraft every second week.

B. Aircraft that are operated in tropical or semi-tropical high humidity regions. Use the following procedures:

(1) Wash the aircraft with mild soap and fresh water weekly.

(2) Wax the aircraft every second week.

C. Aircraft that are operated in arid, moderate, or cold regions. Use the following procedures:

NOTE: This procedure may be suspended during cold or winter months if step 3 was accomplished prior to the cold season.

(1) Flush with fresh water weekly.

(2) Wash the aircraft with mild soap and fresh water monthly.

(3) Wax the aircraft every second month.

4-85 COMPONENT PRESERVATION AND STORAGE

4-86 Main Rotor Transmission

NOTE: This procedure applies to an uninstalled main rotor transmission.

A. Service the main rotor transmission (Para. 4-12), or alternatively, completely fill the transmission. Refer to Table 4-1 for system capacity and approved oils (30 weight engine oil is acceptable for storage).

B. Plug or cap the breather tube.

C. Ensure the fill cap is secured.

D. Place the transmission in storage with the mast upright.

E. Every 90 days, move the transmission to allow oil to flow to all internal surfaces.

UNCONTROLLED COPY WHEN DOWNLOADED OR PRINTED

Visit www.enstromhelicopter.com for instructions to order an original manual and to register for email notification of updates.

(1) Tip the transmission to horizontal or vertical, as appropriate, approximately 90° from its storage position.

(2) Tip the transmission back to storage position.

F. Turn the pinion approximately three times completely lubricate all moving parts.

G. Prior to returning the main rotor transmission to service:

(1) Remove the breather tube plug or cap, if installed.

(2) Drain the oil (Para. 4-13).

(3) Service the main rotor transmission (Para. 4-12).

4-87 Tail Rotor Transmission

NOTE: This procedure applies to an uninstalled tail rotor transmission.

A. Completely fill the transmission. Refer to Table 4-1 for system capacity and approved oils.

B. Prior to returning the tail rotor transmission to service:

(1) Drain the oil (Para. 4-16).

(2) Service the tail rotor transmission (Para. 4-15).

4-88 Main Rotor Blades – Application of Corrosion Prevention Compound

4-89 General Information

Several factors may lead to bond line separation and corrosion of the blades. During operational service, the polyurethane topcoat applied to the blade may gradually wear away due to erosion from airborne particulate matter or precipitation. Special care should be taken to prevent nicking or chipping of the paint in the bond lines. Also, operation of the main rotor blades in wet or high humidity environments can also significantly accelerate bond line separation and the onset of corrosion through moisture intrusion into the blade. Improper storage of the blades for extended periods of time can foster corrosion.

Proper use of effective corrosion control products is central to all corrosion prevention programs. This procedure identifies a Corrosion Prevention Compound (CPC) compatible with the Enstrom main rotor blade. Enstrom recommends the application of MIL-PRF-81309, Type II or III water displacing soft film CPC (Table 4-1). The water displacing CPC acts on contact by spreading across the exterior blade surfaces, displacing any moisture present, and leaving behind a residue to act as a further barrier after the carrier solvent has evaporated.

Application of the CPC identified in this procedure will not affect the surface finish of the painted/waxed blade if the manufacturer's recommendations for application and the instructions in this procedure are followed.

UNCONTROLLED COPY WHEN DOWNLOADED OR PRINTED

Visit www.enstromhelicopter.com for instructions to order an original manual and to register for email notification of updates.

WARNING: THE CPC'S LISTED IN TABLE 4-1 DO NOT AFFECT THE BONDING AGENT IN THE MAIN ROTOR BLADE. ENSTROM DOES NOT RECOMMEND ANY OTHER CPC'S BECAUSE THEIR EFFECT ON THE BONDING AGENT IS UNKNOWN.

Blades delivered after March 5, 2010 have been treated with CPC during initial production and require repetitive CPC treatment (Para. 4-90). Blades delivered before March 5, 2010 require an initial treatment of CPC (Para. 4-90), the addition of the AN526C1032R6 screw, as well as repetitive CPC treatment.

4-90 Application of CPC

A. Remove the blades from the aircraft, if not already removed, and arrange them on a rack.

B. Prepare a P/N AN526C1032R6 screw, or equivalent, for insertion in the hole at the tip of each blade, 2.75" (69.9 mm) from the leading edge. (If a screw is presently installed, remove the screw.) Apply MIL-PRF-81309 Type II or III CPC (Table 4-1) to the threads of the screw and in the 1032 UNF tapped hole prior to torquing the screw. Standard torque values apply.

C. Remove the tip weight assemblies from the outboard end of each blade using the Main Rotor Blade Plug Tool (Enstrom P/N T-1656-3, or equivalent). Mark each assembly to designate its position as either the forward or aft location and which blade the assemblies were removed from.

D. Following the manufacturer's recommendations, using a pump or aerosol sprayer, spray a coating of CPC on the entire interior surface (i.e., interior blade cavity) of each blade.

E. Rotate or position the spray wand to coat all interior areas of the blade with particular attention given to the interior trailing edge structure.

F. Rotate and flip the blade to introduce a sloshing effect with the excess CPC. Ensure all interior areas of the blade are coated with the CPC.

G. Drain excess CPC from the blade.

NOTE: The CPC may produce toxic vapors. Use only in well ventilated areas. Avoid contact with skin and eyes. Avoid inhalation and ingestion. Follow the manufacturer's warning and safety recommendations.

NOTE: Do not use synthetic wiping cloths or rags during application or clean up. The CPC will dissolve the fabric.

H. Reinstall the tip weight assemblies making sure they are installed in the same location from which they were removed.

I. Wipe off dirt or excess moisture from the exterior blade surface.

J. Following the manufacturer's recommendations, apply a coating of CPC over the entire exterior surface of the blades, including the tip (cap) and along the trailing edge seam.

UNCONTROLLED COPY WHEN DOWNLOADED OR PRINTED

Visit www.enstromhelicopter.com for instructions to order an original manual and to register for email notification of updates.

4-91 Storage of CPC

NOTE: Unless otherwise specified, do not store the CPC at temperatures greater than 50°C (120°F).

WARNING: KEEP THE CPC AWAY FROM OPEN FLAMES, HEAT, OR SPARKS AS THEY MAY BE FLAMMABLE.

A. Follow the recommendations provided by the manufacturer.

UNCONTROLLED COPY WHEN DOWNLOADED OR PRINTED

Visit www.enstromhelicopter.com for instructions to order an original manual and to register for email notification of updates.

INTENTIONALLY LEFT BLANK

UNCONTROLLED COPY WHEN DOWNLOADED OR PRINTED

Visit www.enstromhelicopter.com for instructions to order an original manual and to register for email notification of updates.

SECTION 5

WEIGHT AND BALANCE

TABLE OF CONTENTS

Paragraph		Page
5-1	**General Information**	**MM-5-3**
5-2	**Approved Center of Gravity Envelopes**	**MM-5-3**
	A. Longitudinal c.g.	MM-5-3
	B. Lateral Offset Moment	MM-5-4
5-3	**Weighing the Helicopter**	**MM-5-5**
	A. Tools & Equipment	MM-5-5
	B. Weighing Procedure	MM-5-5
5-4	**Loading**	**MM-5-10**
	A. General Information	MM-5-10
	B. Sample Calculation – Longitudinal C.G.	MM-5-11
	C. Sample Calculations – Lateral Offset Moment	MM-5-12

UNCONTROLLED COPY WHEN DOWNLOADED OR PRINTED

Visit www.enstromhelicopter.com for instructions to order an original manual and to register for email notification of updates.

INTENTIONALLY LEFT BLANK

UNCONTROLLED COPY WHEN DOWNLOADED OR PRINTED

Visit www.enstromhelicopter.com for instructions to order an original manual and to register for email notification of updates.

SECTION 5

WEIGHT AND BALANCE

5-1 GENERAL INFORMATION

This helicopter must be flown within the weight and center of gravity limits. The helicopter empty weight, empty weight c.g., total basic weight and basic weight c.g. for this helicopter are found on form F 168A, Figure 5 9. Removal or installation of approved optional equipment will change the basic helicopter weight and moment. This change shall be recorded on Form F 165A, Figure 5 8, Basic Weight and Balance Record. The pilot will use the figures on Form F 165A when performing calculations to ensure the helicopter is loaded properly.

NOTE: Initial production F-28F and 280F models were limited to maximum gross weight of 2350 lb. Any early F-28F or 280F models modified with kit P/N 28-100015 and all later F-28F production helicopters are certified to 2600 lb maximum gross weight. (Refer to the H1CE Type Certificate Data Sheet for more information for float operations.)

5-2 APPROVED CENTER OF GRAVITY ENVELOPES

A. Longitudinal c.g.

(1) Station zero located 100.0 inches forward of centerline of main rotor hub.

(2) Longitudinal c.g. range varies with gross weight from 92.0 inches to 100.0 inches. See Figure 5-1.

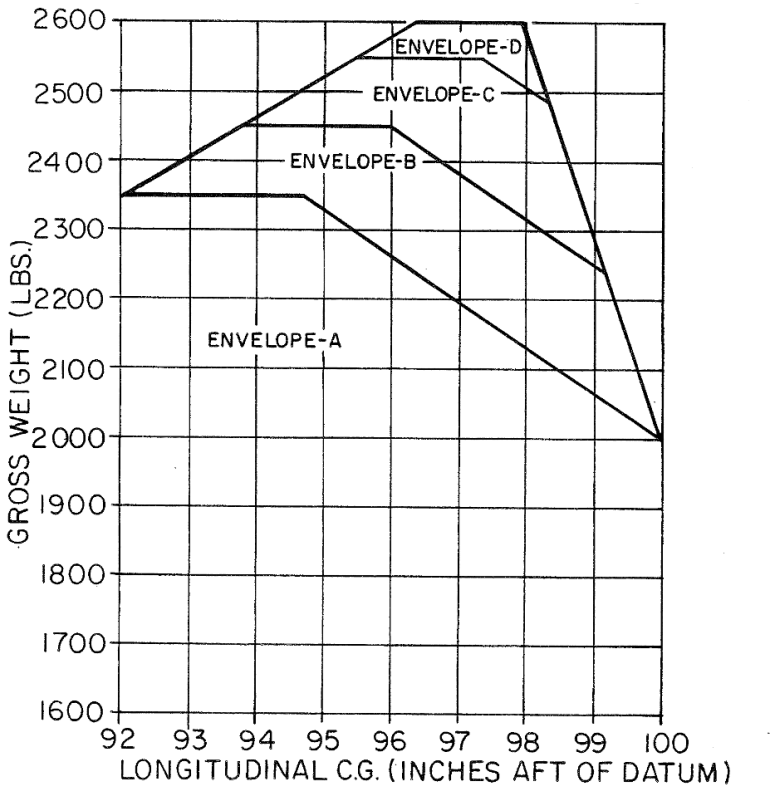

Figure 5-1. Longitudinal C.G. Envelopes

UNCONTROLLED COPY WHEN DOWNLOADED OR PRINTED

Visit www.enstromhelicopter.com for instructions to order an original manual and to register for email notification of updates.

B. Lateral Offset Moment

(1) Centerline of helicopter is 0 inch lateral moment arm. Moment arms left of centerline are negative.

(2) Lateral c.g. Locations

(a) Two on board

1	Left seat (pilot)	-13.5
2	Right seat (co-pilot)	+13.5

(b) Three on board

1	Left seat (pilot)	-13.5
2	Center passenger	+3.0
3	Right passenger	+20.5

(3) Lateral offset moments variable with gross weight from -3250 in-lb to +3700 in-lb. See Figure 5-2.

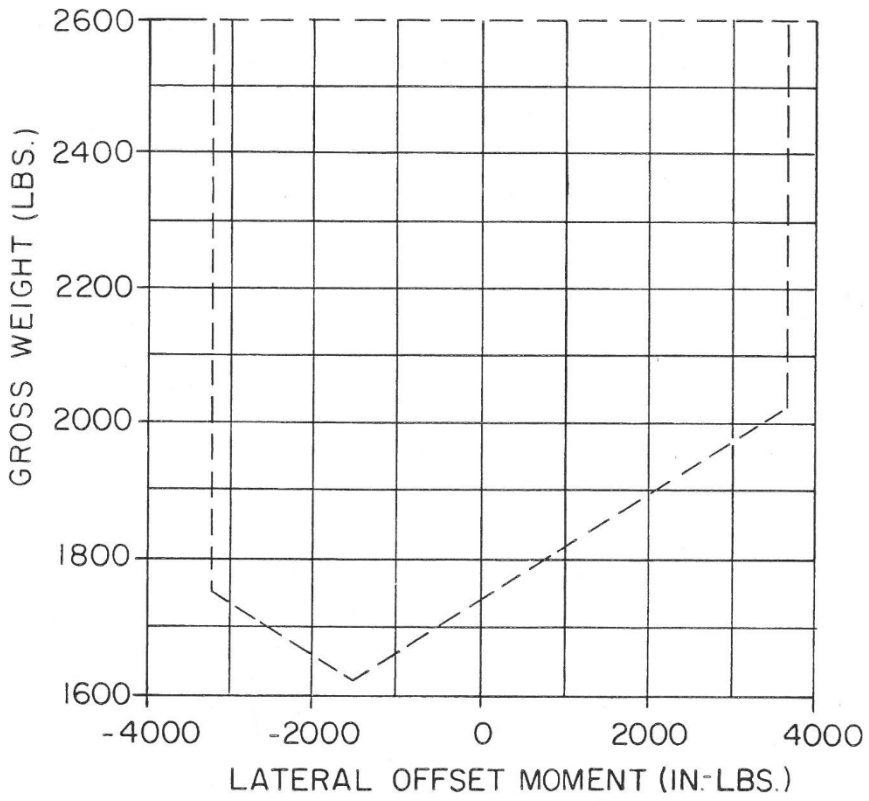

Figure 5-2. Lateral Offset Moment Envelope

UNCONTROLLED COPY WHEN DOWNLOADED OR PRINTED

Visit www.enstromhelicopter.com for instructions to order an original manual and to register for email notification of updates.

5-3 WEIGHING THE HELICOPTER

A. Tools and Equipment

(1) Tape measure

(2) Two scales - 1000 lb capacity

(3) Scale - 100 lb capacity

(4) Bubble level

(5) Work stand

B. Weighing Procedure

(1) Clean helicopter - remove rags, charts, etc.

(2) Drain fuel, check all other operating fluids full.

(3) Move helicopter inside closed building.

(4) Check for proper installation of accessory items.

(5) Close and secure both doors.

(6) Align one main rotor blade over tail cone.

(7) Hoist or jack helicopter to a height to clear scales.

(8) Position a pipe nipple in the center of left and right 1000 lb capacity scales. Place scales under landing skids so nipples will contact skid gear at a point 17.7 inches aft from the centerline of the forward 3 inch diameter cross tube.

NOTE: This distance is identified by a rivet (STA 93.4) in the skid tube of later S/N helicopters.

NOTE: See Figure 5-3 for locating fulcrum by using T-1794. This tool may be purchased from Enstrom Helicopter Service Department.

(9) Locate the 100 lb capacity scale at the center line of the tail rotor output shaft. See Figure 5-4.

(10) Adjust height of tail to level helicopter. Level checked at left lower pylon tube. Lateral level checked at lower forward pylon tube.

(11) When helicopter is level, read the scales and enter weights on Weight Chart, Figure 5-7.

CAUTION: WEIGHT AND MEASUREMENT READINGS ARE CRITICAL. DOUBLE CHECK RESULTS.

UNCONTROLLED COPY WHEN DOWNLOADED OR PRINTED

Visit www.enstromhelicopter.com for instructions to order an original manual and to register for email notification of updates.

(12) Remove helicopter from scales.

NOTE: DO NOT remove curbing, nipples, blocks, etc. from scales. Weigh these items and enter weights in tare column on Figure 5-7.

(13) Subtract tare from scale readings and enter net weights.

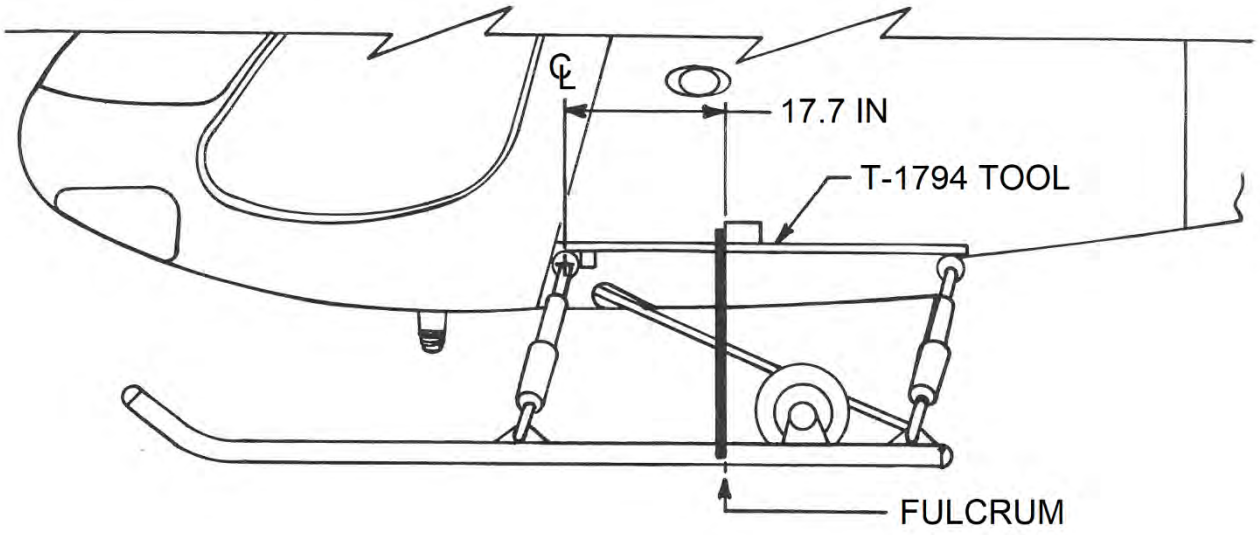

Figure 5-3. Weight and Balance, Tool Positioning

UNCONTROLLED COPY WHEN DOWNLOADED OR PRINTED

Visit www.enstromhelicopter.com for instructions to order an original manual and to register for email notification of updates.

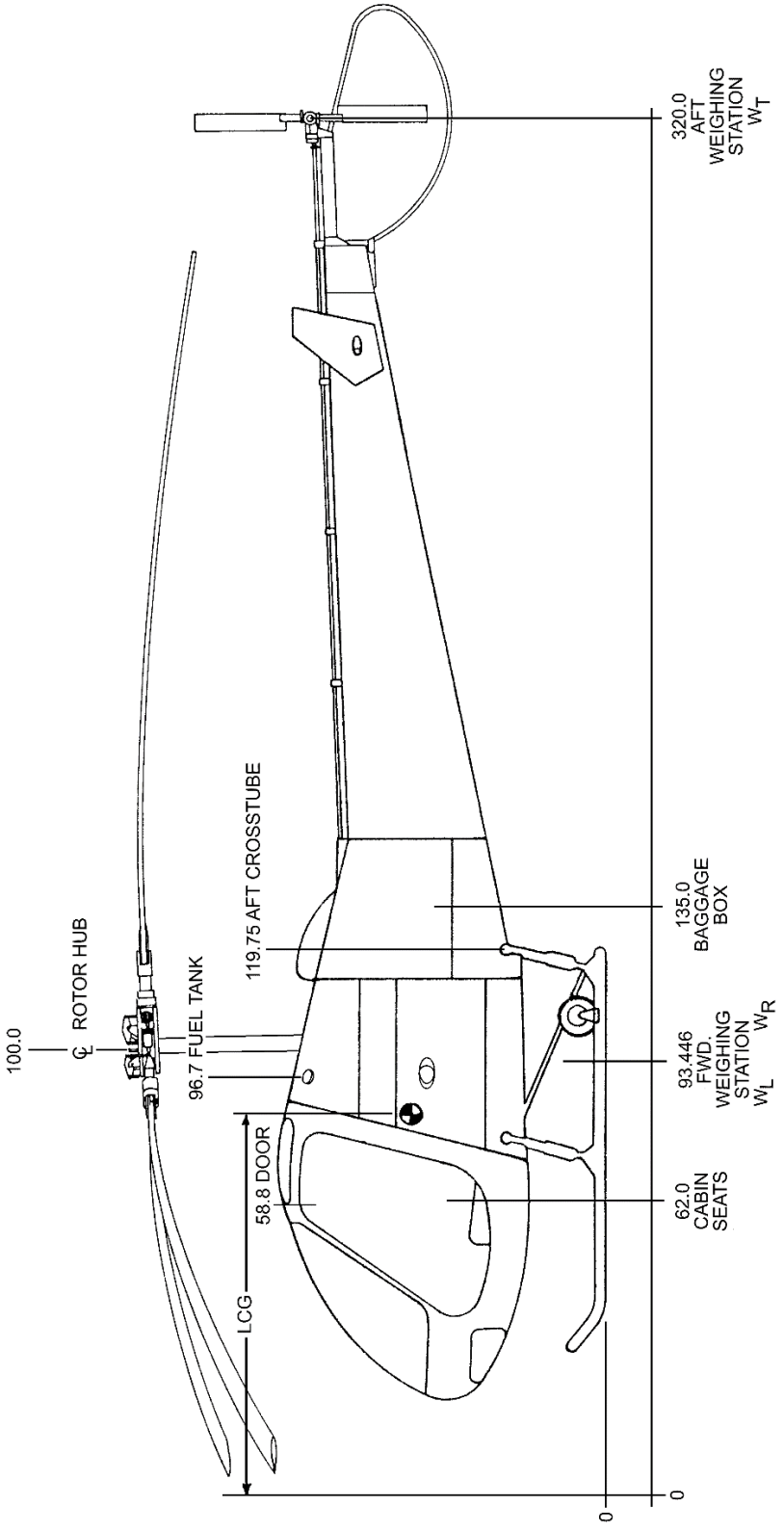

Sheet 1 of 3

F-28F

Figure 5-4. Weighing Stations

UNCONTROLLED COPY WHEN DOWNLOADED OR PRINTED

Visit www.enstromhelicopter.com for instructions to order an original manual and to register for email notification of updates.

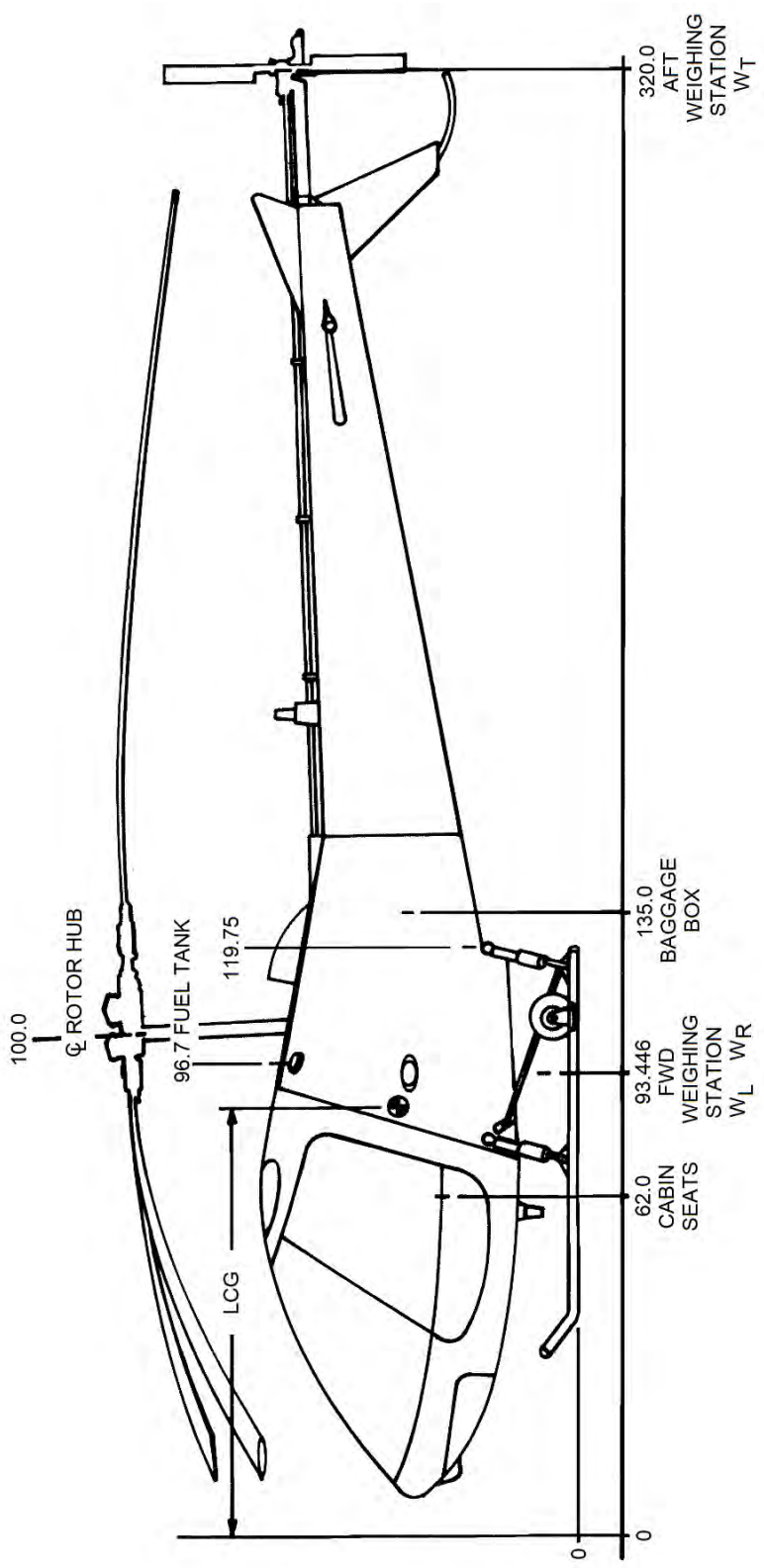

Sheet 2 of 3

280F

Figure 5-4. Weighing Stations

UNCONTROLLED COPY WHEN DOWNLOADED OR PRINTED

Visit www.enstromhelicopter.com for instructions to order an original manual and to register for email notification of updates.

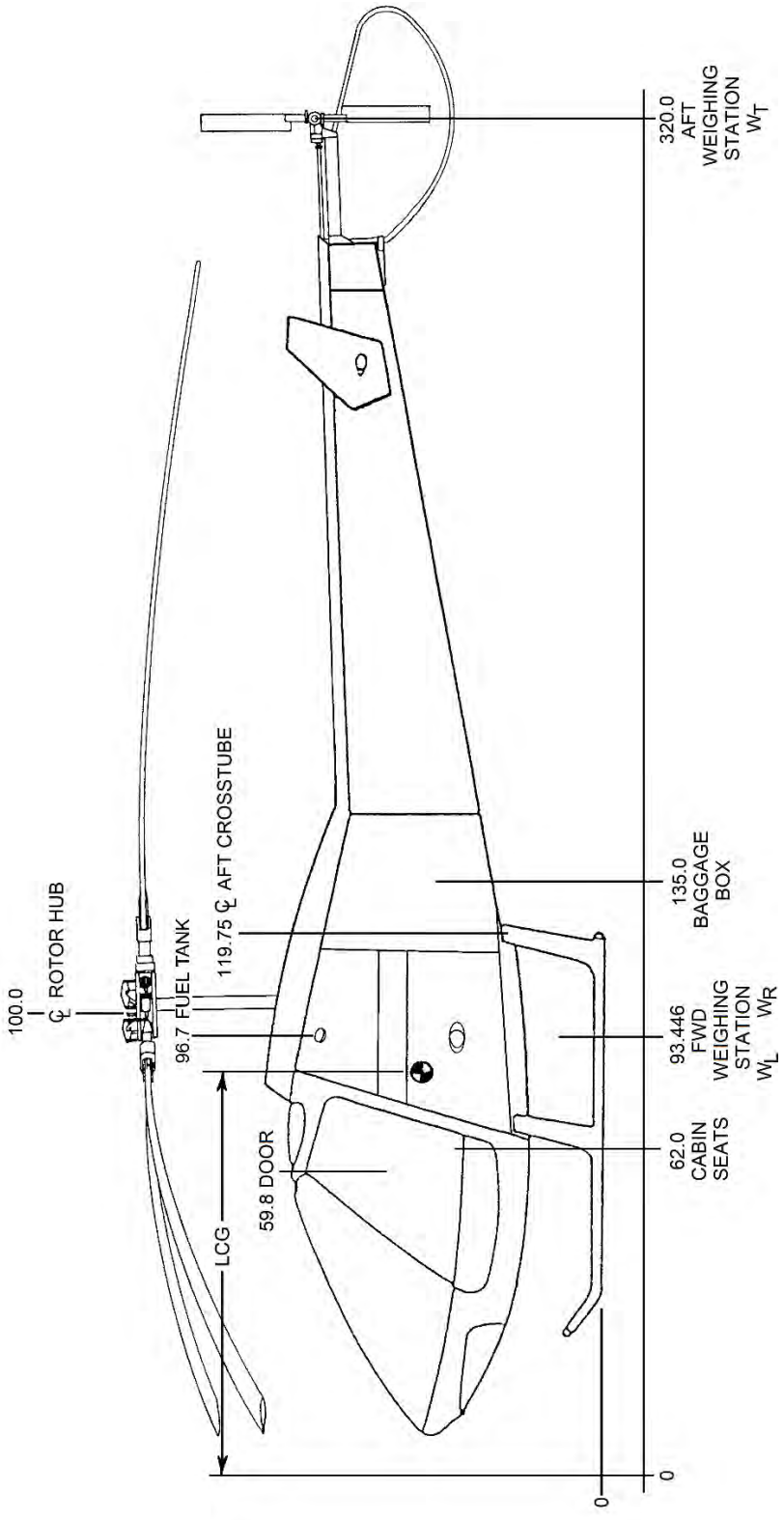

Sheet 3 of 3

280FX

Figure 5-4. Weighing Stations

UNCONTROLLED COPY WHEN DOWNLOADED OR PRINTED

Visit www.enstromhelicopter.com for instructions to order an original manual and to register for email notification of updates.

(14) Enter arms and multiply by weights to get moments.

(15) Total weights and moments.

(16) Using formula on bottom of Figure 5-7, calculate c.g.

(17) Transfer weight, c.g. or arm and moment to top of form F-168A (Figure 5-8).

(18) On Form F-168A enter all optional and surplus equipment in the helicopter at weigh-in. Then enter all standard equipment not installed on the helicopter at weigh-in.

(19) Total weights and moments.

(20) Find total empty weight and moment of standard helicopter.

(21) Add to this figure optional equipment to obtain total basic weight and moment.

(22) Transfer these figures to Form F-165A (Figure 5-8), Basic Weight and Balance Record.

NOTE: Any changes to the helicopter such as structural repairs or modifications, installation of optional equipment or removal of optional equipment, will require an entry on Form F-165A.

5-4 LOADING

A. General Information

It is the responsibility of the helicopter pilot to ensure that the helicopter is loaded properly. Using the basic weight and moment from Form F-165A (Figure 5-8) and the loading Chart (Figure 5-5), the pilot can obtain the total weight and moment for various loading conditions. The pilot should first calculate the total weight and moment for zero usable fuel, as this will show the c.g. shift with fuel burn-off. If the c.g. is within limits, add the planned fuel load and compute the c.g. If the c.g. is within limits, the last item to check is the lateral offset moment.

UNCONTROLLED COPY WHEN DOWNLOADED OR PRINTED

Visit www.enstromhelicopter.com for instructions to order an original manual and to register for email notification of updates.

B. Sample Calculation - Longitudinal C.G.

SAMPLE LOADING		SAMPLE HELICOPTER Arm (in)	SAMPLE HELICOPTER Weight (lb)	SAMPLE HELICOPTER Moment (1000 in-lb)	HELICOPTER S/N_____ Weight (lb)	HELICOPTER S/N_____ Moment (1000 in-lb)
1.	Basic empty weight from Form F-165A	100.7	1610.0	162.1		
2.	Pilot and passengers Cabin seats	62.0	480.0	29.8 (1)		
3.	Baggage compartment load	135.0	20.0	2.7 (1)		
4.	Total weight and moment with zero usable fuel to check c.g. shift with fuel burn-off (landing condition)	92.2 (2)	2110.0	194.6		
5.	Usable fuel	96.7	240.0	23.2 (1)		
6.	Total weight and moment with usable fuel (takeoff condition)	92.6 (2)	2350.0 (3)	217.6		

(1) Moments obtained by multiplying weight times arm or from Loading Chart, Figure 6.5.

(2) The longitudinal c.g. relative to the datum line may be found by dividing the moment by the weight.

$$\text{c.g. zero fuel} = \frac{194{,}600 \text{ in-lb}}{2110.0 \text{ lb}} = 92.2 \text{ in}$$

$$\text{c.g. zero fuel} = \frac{217{,}600 \text{ in-lb}}{2350 \text{ lb}} = 92.6 \text{ in}$$

The total weight and moment can also be plotted on Figure 6.6 to determine if the loading is within longitudinal limits.

(3) Maximum gross weight is 2600 lb.

UNCONTROLLED COPY WHEN DOWNLOADED OR PRINTED

Visit www.enstromhelicopter.com for instructions to order an original manual and to register for email notification of updates.

C. Sample Calculations – Lateral Offset Moment

	Arm (in)	Weight (lb)	Moment (in-lb)
Pilot (left seat)	- 13.5	170	- 2295
Passenger (center seat)	+ 3.0	140	+ 420
Passenger (right seat)	+ 20.5	170	+ 34
			+ 1610

Plot 2350 lb and +1610 in-lb on Figure 5-1 to assure moment is in approved area.

UNCONTROLLED COPY WHEN DOWNLOADED OR PRINTED

Visit www.enstromhelicopter.com for instructions to order an original manual and to register for email notification of updates.

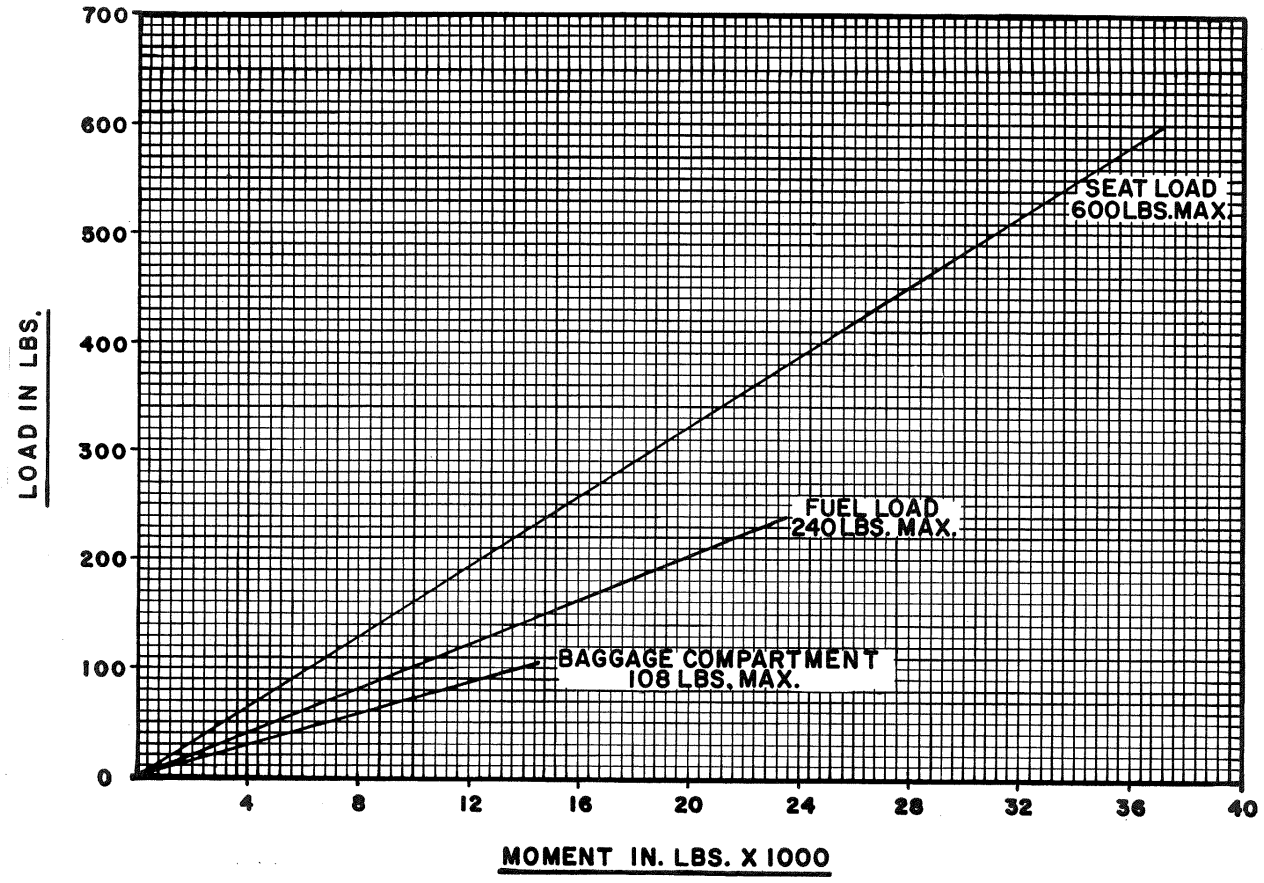

Figure 5-5. Loading Chart

UNCONTROLLED COPY WHEN DOWNLOADED OR PRINTED

Visit www.enstromhelicopter.com for instructions to order an original manual and to register for email notification of updates.

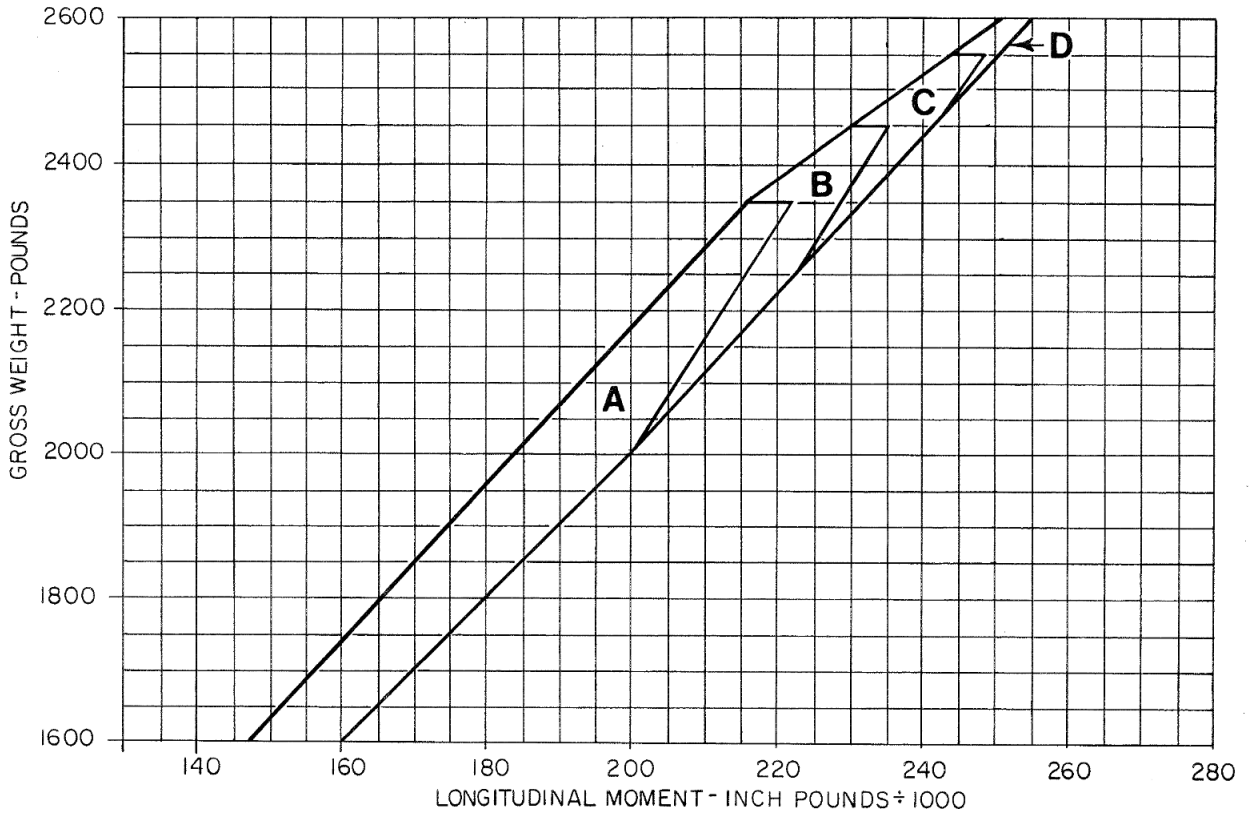

Figure 5-6. Gross Weight Vs. Longitudinal Moment

UNCONTROLLED COPY WHEN DOWNLOADED OR PRINTED

Visit www.enstromhelicopter.com for instructions to order an original manual and to register for email notification of updates.

Model _____ Serial No. _____ Reg No. _____ Date _____

WEIGHT POINT	SCALE-LBS.	TARE	NET. WT.	ARM	MOMENT x 100
LEFT GEAR	(W_L)	----		93.446	
RIGHT GEAR	(W_R)	----		93.446	
TAIL	(W_T)	X		320.0	
TOTAL	X X X	X		X	

$$LCG = \frac{W_T\,(320.0) + (W_L + W_R)(93.446)}{W_T + W_L + W_R} = _____$$

DATE

WEIGHED BY _____

Figure 5-7. Weight Sheet

UNCONTROLLED COPY WHEN DOWNLOADED OR PRINTED

Visit www.enstromhelicopter.com for instructions to order an original manual and to register for email notification of updates.

BASIC WEIGHT AND BALANCE RECORD

Model _____ Serial No. _____ Reg No. _____ Date _____

| ACTUAL DELIVERED WEIGHT AND BALANCE DATA | | |

Model _____ Serial No. _____ Reg No. _____ Date _____

		WEIGHT LBS.	ARM IN.	MOMENT IN-LB.
WEIGHT (AS WEIGHTED)				
PLUS: MISSING STD. EQUIPMENT - net				
LESS: OPT & SURPLUS WT. (next page)				
LESS: ENGINE OIL				
PLUS: UNUSABLE FUEL				
WEIGHT				
	ACTUAL			
PLUS: ENGINE OIL				
PLUS: OPTIONAL EQUIPMENT (next page)				

ITEMIZED MISSING STD. EQUIP:

	WEIGHT LBS.	ARM IN.	MOMENT IN-LB.
None			

TOTAL BASIC WEIGHT & C.G.			

Figure 5-9. Helicopter Weight and C.G. Calculation (F-168A)

UNCONTROLLED COPY WHEN DOWNLOADED OR PRINTED

Visit www.enstromhelicopter.com for instructions to order an original manual and to register for email notification of updates.

Model _____ Serial No. _____ Reg No. _____ Date _____

ENSTROM OPTIONAL EQUIPMENT LIST

INSTRUMENTS - REQUIRED (STD EQUIP)	Item Wt.	Arm STD Panel
Altimeter	1.2	36
Airspeed Indicator	.5	36
Tachometer	1.3	36
Manifold-Fuel Pressure	1.5	36
Instrument Cluster	2.0	36
Oil Temperature		
Oil Pressure		
Gearbox Temperature		
Cylinder Temperature		
Fuel Quantity		
Ammeter		
Compass	1.0	40
Graphic Engine Monitor	1.0	36
Clock*	.5	36
Annunciator	.04	32
* Standard equipment not required by FAA		

No.	OPTIONAL EQUIPMENT	WT.	ARM	MOMENT IN/LB
	TOTAL		**X**	

Figure 5-10. Enstrom Equipment List

UNCONTROLLED COPY WHEN DOWNLOADED OR PRINTED

Visit www.enstromhelicopter.com for instructions to order an original manual and to register for email notification of updates.

No.	OPTIONAL EQUIPMENT	WT.	ARM	MOMENT IN/LB

Figure 5-10. Optional Equipment List Continued

UNCONTROLLED COPY WHEN DOWNLOADED OR PRINTED

Visit www.enstromhelicopter.com for instructions to order an original manual and to register for email notification of updates.

INTENTIONALLY LEFT BLANK

UNCONTROLLED COPY WHEN DOWNLOADED OR PRINTED

Visit www.enstromhelicopter.com for instructions to order an original manual and to register for email notification of updates.

SECTION 6

ELECTRICAL

TABLE OF CONTENTS

Paragraph	Description	Page
6-1	**Electrical System**	**MM-6-3**
	A. General Information	MM-6-3
	B. General Troubleshooting	MM-6-3
6-2	**Battery**	**MM-6-4**
	A. General Information	MM-6-4
	B. Troubleshooting – Battery	MM-6-4
	C. Troubleshooting – Battery Master Power	MM-6-4
	D. Buss Faults Breaker System	MM-6-6
6-3	**Alternator**	**MM-6-6**
	A. General Information	MM-6-6
	B. Troubleshooting	MM-6-6
	C. Removal	MM-6-7
	D. Inspection	MM-6-7
	E. Installation	MM-6-7
6-4	**Voltage Regulator**	**MM-6-9**
	A. General Information	MM-6-9
	B. Troubleshooting	MM-6-9
	C. Removal	MM-6-9
	D. Installation	MM-6-9
	E. Adjustment	MM-6-10
6-5	**Overvoltage Relay**	**MM-6-11**
6-6	**Starter**	**MM-6-11**
	A. General Information	MM-6-11
	B. Troubleshooting	MM-6-11
	C. Removal	MM-6-12
	D. Installation	MM-6-12
6-7	**Fuel Boost Pump**	**MM-6-13**
	A. General Information	MM-6-13
	B. Troubleshooting	MM-6-13
6-8	**Lighting**	**MM-6-14**
	A. Troubleshooting – Forward Landing Light	MM-6-14
	B. Troubleshooting – Aft Landing Light	MM-6-14
	C. Troubleshooting – Panel Lights	MM-6-14
	D. Troubleshooting – Navigation Lighting	MM-6-15
6-9	**Clutch Disengage Warning Light**	**MM-6-16**
	A. General Information	MM-6-16
6-10	**Manifold Pressure Overboost Caution Light**	**MM-6-16**
	A. General Information	MM-6-16
6-11	**Hourmeter**	**MM-6-17**
	A. Troubleshooting	MM-6-17
6-12	**Trim Motors**	**MM-6-17**
	A. Troubleshooting	MM-6-17

UNCONTROLLED COPY WHEN DOWNLOADED OR PRINTED

Visit www.enstromhelicopter.com for instructions to order an original manual and to register for email notification of updates.

SECTION 6

ELECTRICAL

TABLE OF CONTENTS – CONTINUED (PAGE MM-6-2)

Paragraph	Description	Page
6-13	**Ammeter – Charging System**	**MM-6-18**
	A. Troubleshooting	MM-6-18
6-14	**Instrument Cluster**	**MM-6-19**
	A. Troubleshooting	MM-6-19
	B. Troubleshooting – Main Rotor Gearbox Temperature	MM-6-19
	C. Troubleshooting – Amperage Meter	MM-6-20
	D. Troubleshooting – Oil Temperature Module	MM-6-20
	E. Troubleshooting – Cylinder Head Temperature Module	MM-6-20
	F. Instrument Cluster Module Check Procedure	MM-6-21
6-15	**Charts**	**MM-6-26**
	A. Electrical Loads	MM-6-26

UNCONTROLLED COPY WHEN DOWNLOADED OR PRINTED

Visit www.enstromhelicopter.com for instructions to order an original manual and to register for email notification of updates.

6-1 ELECTRICAL SYSTEM

A. General Information

The F-28F/280F Series electrical system is either a 12 volt or a 28 volt D.C. solid state regulated type. The system consists of one main buss, one generating source and one power storage source. Electric current is distributed via buss bar thru individual trip free circuit breakers. Networks not protected by trip free breakers contain inline fuses. Later F-28F/280FX helicopters are equipped with a 28 volt D.C. electrical system. Electrical power is supplied by a 24-volt, direct current, 70 ampere alternator and an 11 amp-hour lead acid battery.

Electrical safety devices are provided for buss overcurrent and overvoltage protection.

Aircraft equipped with avionics systems are supplied with radio frequency interference filters.

Refer also to Section 21 for discussion regarding F-28F/280FX electrical system equipment updates.

B. General Troubleshooting

(1) Always refer to the Electrical System Schematic for system interconnections (Section 6 or Section 21 as applicable).

(2) Simple, fast, wire checks can be performed by making continuity tests with an ohmmeter. The continuity check is a quick procedure for isolating electrical problems to a specific circuit.

(3) Check for loose hardware or loose connectors at wire terminations.

(4) Check all ground connections for evidence of looseness or corrosion.

(5) Check wire insulation, grommets, and tie wraps for wear or deterioration.

(6) In the event of trouble with A/C lighting (non-LED type), substitute equivalent bulbs (known to operate) from a different location on the A/C to determine whether the problem is lamp or system related. This is especially useful for check strobes and anti-collision lamps.

(7) The following devices should be serviced as recommended by the respective manufacturers:

(a) Alternator

(b) Starter motor

(c) Magneto-vibrator-ignition switch

(d) Fuel boost pump motor

(e) Strobe systems

(8) Continuous wire runs (ref. schematic diagram) are typically identified by an assigned wire number, i.e. 24-2, from the aircraft battery positive terminal to the starter relay contacts. In cases where wire runs are interrupted by splices, disconnects, fuses etc., the wire number

UNCONTROLLED COPY WHEN DOWNLOADED OR PRINTED

Visit www.enstromhelicopter.com for instructions to order an original manual and to register for email notification of updates.

is also assigned a letter, i.e., wire 49-1A from buss to F3, and wire number 49-1B from the opposite end of F3 to wire number 49-1C. The A-B designation indicates wire discontinuities. Typically wire numbers (not letters) sequence through electrical devices, such as lamps, motors, and relays, etc.

6-2 BATTERY

A. General Information

The aircraft is equipped with a 12 volt or 24 volt battery as described below. The following specifications apply to the standard aircraft battery:

	12 VOLT	24 VOLT
Manufacturer	Concorde	Concorde
Type	RG-35A	RG-24-11M
Voltage	12	24
Amp Hours	29	11
Cold Cranking Amperes	390	160
Overall Dimensions (in) (mm)	9.78L x 5.17W x 6.83H (248L x 131W x 174H)	8.65L x 7.31W x 6.73H (220L x 186W x 171H)

B. Battery – Troubleshooting

Problem	Cause	Required Action
Battery discharged.	Loose or corroded terminals.	Clean connections, tighten terminal hardware.
	Loose belt.	Reference Para. 6-3, E Alternator Installation.

NOTE: Refer to Concorde RG Series Component Maintenance Manual, Document No. 5-0171 for electrical renew test procedure.

C. Battery Master Power – Troubleshooting

Problem	Cause	Required Action
Master switch-on, all electrical systems in-operative.	Dead battery.	Replace or recharge.
	Master relay faulty (RL1)* (coil or contacts bad).	Replace master relay.
	Overcurrent trip breaker “open” or faulty (CB16)*.	Reset overcurrent breaker or replace breaker if faulty.
	Inline fuse blown (F18)*.	Replace fuse.
	Overcurrent breaker faulty (CB17)*.	Replace breaker.
	Current limiter faulty (F9).	Replace current limiter.

* Applies to early F-28F/280F with buss faults breaker protection system.

UNCONTROLLED COPY WHEN DOWNLOADED OR PRINTED

Visit www.enstromhelicopter.com for instructions to order an original manual and to register for email notification of updates.

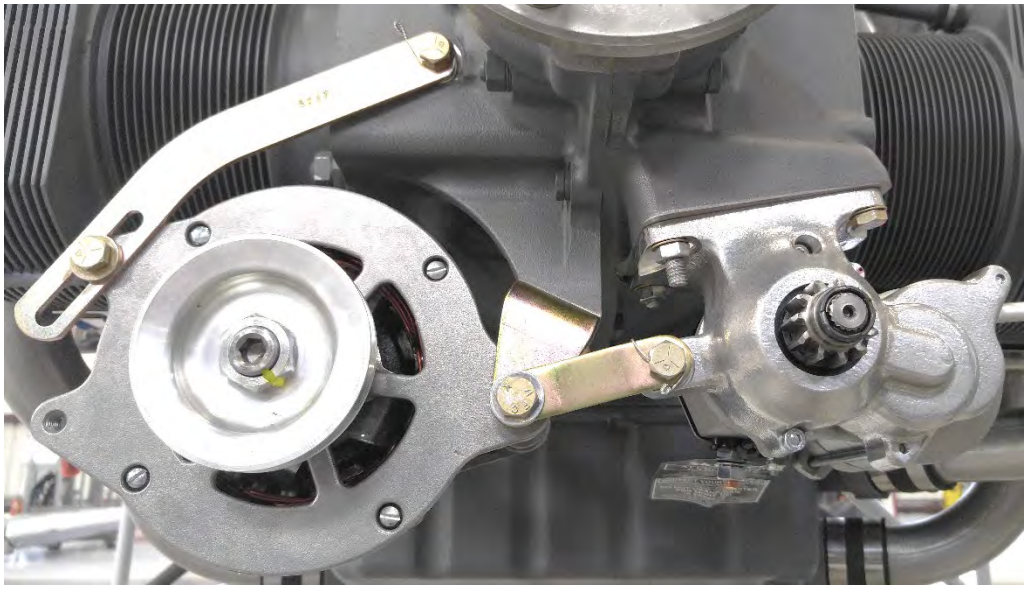

Figure 6-1A. Alternator (left) and Starter Installation (right)
(shroud removed for clarity)

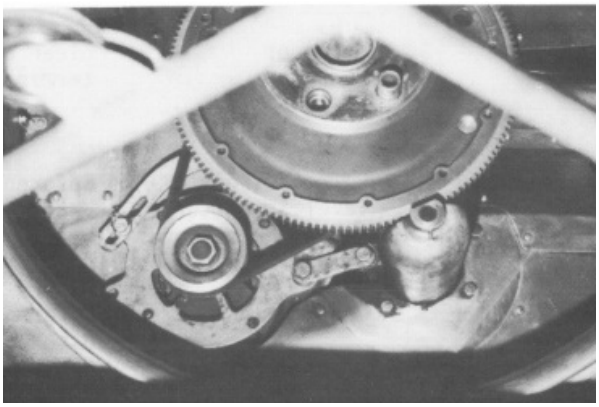

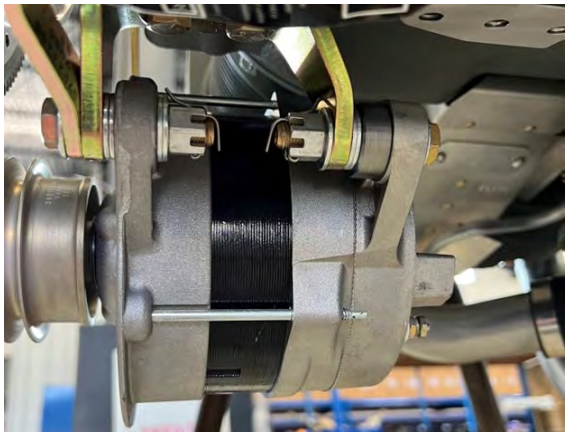

Figure 6-1B. Alternator and Starter Installation

Top - Fan shroud side showing alternator mount pivot slide tension bar and drive belt
Bottom - Underside of engine showing alternator mount position and pivot mount bolts

UNCONTROLLED COPY WHEN DOWNLOADED OR PRINTED

Visit www.enstromhelicopter.com for instructions to order an original manual and to register for email notification of updates.

D. Buss Faults Breaker System

General Description – Early F-28F/280F Series:

The battery protection system is designed to remotely sense electrical overloads in the aircraft which cause excessive battery current drain. This system consists of fuse (FIB), overcurrent breaker (CB17) and the “overcurrent trip” breaker (CB16) on the instrument panel. Circuit breaker CB17 (located at the aircraft battery) senses the overload condition, simultaneously trips the dash-mounted overcurrent breaker CB16 and deactivates the master relay. The action removes the battery from the aircraft buss. Battery power cannot be returned to the aircraft buss unless the “overcurrent trip” dash-mounted breaker is first reset. The "overcurrent trip” breaker cannot be reset until the overload condition has been corrected. Repair of this system is limited to replacement of faulty components, and the removal of the overload condition.

Electrical current is distributed via buss bar through individual trip-free circuit breakers. Networks not protected by trip-free breakers contain inline fuses.

General Description – Later F-28F/280FX:

The battery and APU buss are protected by a current limiter (F9) which is located at the aft mounted battery box and is installed between the starter relay and the master switch relay which is located on the electrical panel located just inboard of the airbox. The remaining circuits are protected by either switch type circuit breakers or trip free push/pull circuit breakers installed on the lower console switch panel or on the lower avionics panel. Secondary circuits are normally protected by fuses located on a panel which is installed on the left side of the lower instrument panel console. On aircraft (F-28F S/N 833 and subsequent; 280FX S/N 2167 and subsequent) with illuminated panels, all standard equipment (except for the starter stuck relay), is protected by a circuit breaker or switch type circuit breaker. Some optional equipment may be protected by an in-line fuse. The starter stuck relay fuse (F25) is an in-line type and is located on the aft side of the battery tray.

6-3 ALTERNATOR

A. General Information

The aircraft alternator is a belt driven type. The alternator output rating is 70 amperes continuous at approximately 12 volts D.C. or 28 volts D.C., depending on the electrical system. Principle components of the alternator are the stator, the rotor, the slip ring end head, the drive end head and the rectifier diodes.

B. Troubleshooting

The following list suggests areas to be investigated should alternator performance be suspect:

(1) Brushes – Remove and inspect for condition and seating

(2) Rotor – Test for ground or shorted windings

(3) Rectifier Diodes – Test for open or shorted diodes

(4) Stator – Test for open

(5) Bearings – Check for roughness or excessive clearance.

UNCONTROLLED COPY WHEN DOWNLOADED OR PRINTED

Visit www.enstromhelicopter.com for instructions to order an original manual and to register for email notification of updates.

(6) Housing cleanliness – End housing should be kept clean by wiping with a cloth dampened in solvent

NOTE: It is recommended that the service manual applicable to your alternator type be consulted for detailed repair procedures.

C. Alternator – Removal

(1) Disconnect battery cables.

(2) Remove cowling and baggage box.

(3) Remove jackstrut and pulley assembly. (See Para. 11-4 for jackstrut removal procedure).

(4) Remove the fan assembly exposing the alternator.

(5) Cut safety wire on bolt securing alternator belt tension arm and remove bolt. Pivot alternator and remove v-belt from alternator pulley.

(6) Disconnect wires from alternator. Label the wires or note the position of the wire numbers for correct placement on reinstallation.

NOTE: The ground wire is connected to the case of the alternator; not to the AUX terminal.

(7) Remove the two alternator mount bolts and remove alternator.

NOTE: Identify and record position of any spacers prior to removing the alternator bolts.

D. Alternator – Inspection

(1) Inspect the alternator I/A/W the manufacturer's instructions.

(2) Inspect the alternator mount for corrosion, damage, and security.

(3) Check belt tension slip at 12-14 ft-lbs/16.3-19.0 Nm.

NOTE: It is recommended that the service manual applicable to the alternator type be consulted for detailed repair procedures.

E. Alternator – Installation

CAUTION: INADVERTENT ENGIINE SARTING MAY OCCUR WHEN TURNING THE ENGINE BY HAND UNLESS PRECAUTIONS ARE TAKEN. REMOVE THE IGNITION WIRES FROM THE SPARK PLUGS BEFORE MANUALLY TURNING THE CRANK SHAFT.

NOTE: On new or replacement alternators, remove fan and replace with spacer from removed alternator (Reference SIL 0016).

NOTE: Remove cooling shroud from the aft side of the alternator.

UNCONTROLLED COPY WHEN DOWNLOADED OR PRINTED

Visit www.enstromhelicopter.com for instructions to order an original manual and to register for email notification of updates.

(1) Align alternator with mount bracket and install the two attachment bolts.

NOTE: Tighten mount bolts finger tight allowing alternator to pivot. (Tighten alternator attachment bolts to take out clearance but allow movement for adjusting tension.)

(2) Install the alternator adjusting arm and tighten the bolts finger tight to allow the alternator to pivot.

(3) Install the starter ring gear support (flywheel) on the crankshaft and secure with two, temporary, ½ x 20 x 1 inch bolts installed in the two positions where there are no crankshaft bushings. (It is acceptable to use a ¾ x 6 inch tubular spacer over two of the 28-13306-1 (AN178H bolts).)

CAUTION: DO NOT INSTALL ANY SHIMS BETWEEN THE FLYWHEEL AND THE CRANKSHAFT FLANGE.

(4) Install the belt over the two pulleys.

(5) Pivot the alternator and adjust the belt tension until the pulley just slips at 12 ft-lbs/16.3 Nm. (Set tension to 14 ft-lbs/19.0 Nm for new installations.)

(6) Torque the outboard bolt through the adjustment arm (80-90 in-lb/9.0-10.1 Nm).

NOTE: Visually inspect and verify alignment between the alternator pulley and the starter ring gear pulley.

(7) Remove the bolts securing the starter ring gear support and pull off the starter ring gear support and the belt.

(8) Torque the inboard adjusting arm bolts (80-90 in-lb/9.0-10.1 Nm) and safety wire both bolts (MS20995C32).

CAUTION: ALTERNATOR ATTACHMENT HARDWARE MUST NOT BE LOOSE.

(9) Torque the alternator mount bolts (160-190 in-lb/19.1-21.6 Nm) and install the cotter pins.

(10) Install the starter ring gear support on the flywheel.

(11) Install the alternator belt over the alternator pulley and turn the crankshaft by hand while guiding the belt onto the pulley.

CAUTION: CONNECT THE GROUND WIRE TO CASE GROUND. DO NOT CONNECT IT TO THE AUX TERMINAL.

(12) Connect wires to the alternator as previously marked.

(13) Install and secure the lower access panel on the fan shroud and tighten hardware to standard torque.

(14) Position auxiliary oil cooler in place and secure with four attachment bolts.

(15) Install fan assembly and shims on flywheel.

UNCONTROLLED COPY WHEN DOWNLOADED OR PRINTED

Visit www.enstromhelicopter.com for instructions to order an original manual and to register for email notification of updates.

(16) Install jackstrut and pulley assembly. (See Para. 11-4 for jackstrut installation procedure.)

(17) Inspect all items for security.

(18) Install cowling.

(19) Connect battery cables.

6-4 VOLTAGE REGULATOR

A. General Information

Alternator voltage is controlled by a solid state transistor regulator. The regulator is factory set for proper voltage control and should not normally require field adjustment (refer to Paragraph 6-4, E, regarding temperature compensation adjustment). Field repair of the regulator is generally not practical and the unit should be replaced in the event of failure.

For early F-28F and 280F (12V) helicopters, the voltage regulator was mounted to the electrical plate in the right side engine compartment. This was changed under SDB 0090 whereby is required to relocate the voltage regulator to the seat structure. Later F-28F (12V and 24V) and 280F series (12V and 24V) are originally equipped from the factory with the voltage regulator mounted on the right side of the seat structure in the cabin.

B. Troubleshooting

Symptoms of a faulty regulator include:

(1) Continuous discharge on aircraft ammeter.

(2) Large fluctuations in ammeter needle (needle oscillates from charge to discharge.

(3) Excessive charging indication on ammeter with fully charged or new battery.

(4) Ammeter needle drops to discharge position as additional electrical loads are switched on, such as strobes, landing lights, etc.

C. Removal

(1) Remove the seat deck (fiberglass seat cover) (Para. 8-8, A).

(2) Remove the wire leads from the terminal strip.

(3) Remove the two screws that secure the voltage regulator to the seat structure.

D. Installation

(1) Install the mounting screws. Include the ground wires (white and black) for the top screw installation.

(2) Attach the wire leads to the terminal strip (ref. Diagram 21-6, Sheet 8).

(3) Install the seat deck (Para. 8-8, D).

UNCONTROLLED COPY WHEN DOWNLOADED OR PRINTED

Visit www.enstromhelicopter.com for instructions to order an original manual and to register for email notification of updates.

E. Adjustment

NOTE: If ammeter shows continuous charge or discharge, check voltage regulator adjustment. A voltmeter will be required to check the regulator

(1) Establish an electrical system load of approximately 15 to 20 amperes.

(2) Connect the voltmeter positive lead to the aircraft battery (+) terminal. Connect voltmeter negative lead to the battery (-) terminal.

(3) After one minute of engine operation at proper electrical load, rotate the regulator adjustment screw until the voltmeter at the batter indicates 14.0 ± 0.2 volts for a 12 volt system, or 28.5 ± 0.2 volts for a 24 volt system.

NOTE: Clockwise screw rotation increases voltage. Do not force adjustment screw.

NOTE: Some battery manufacturers may specify a different voltage setting for operations in certain temperature environments. Consult the battery manufacturer's manual for additional guidance.

(a) The setting for a Concorde RG Series lead acid battery should be as follows:

Battery Temperature	Voltage Regulator Settings	
	12V System	24V System
Below 0°C (32°F)	14.5 to 14.75	29.0 to 29.5
0 to 15°C (32 to 59°F)	14.25 to 14.5	28.5 to 29.0
16 to 30°C (60 to 86°F)	14.0 to 14.25	28.0 to 28.5
31 to 45°C (87 to 113°F)	13.75 to 14.0	27.5 to 28.0
Above 45°C (113°F)	13.5 to 13.75	27.0 to 27.5

(4) Disconnect meter from the battery and secure the battery compartment for airworthiness.

UNCONTROLLED COPY WHEN DOWNLOADED OR PRINTED

Visit www.enstromhelicopter.com for instructions to order an original manual and to register for email notification of updates.

6-5 OVERVOLTAGE RELAY

[Deleted]

6-6 STARTER

A. General Information

For early 12V and 24V systems, the components which comprise the starter system include the ignition breaker (CB6), starter switch (S8), starter relay (RL2) and the starter motor (SM). The starter motor receives power directly form the aircraft battery through relay RL2. A pushbutton switch located at the throttle end of the collective stick activates the starter relay by drawing power from the main buss through ignition breaker CB6. The starter relay is located near the aircraft battery.

For later 24V systems, the components which comprise the starter system include the start arm circuit breaker switch (CB/SW1) (7.5 amp), a junction module (JM1A), pilot and copilot start switch (SW119 and SW118, respectively), starter relay (RL2), and the starter motor (SM).

Troubleshooting this system is best accomplished by component replacement with the exception of the starter motor which can be serviced. Servicing of the starter motor should be performed to manufacturer's specification.

B. Troubleshooting

Problem	Cause	Required Action
Starter motor inoperative.	Low battery voltage.	Charge or replace battery.
	Collective start switch defective (S8 or SW119 or SW118).	Replace switch.
	Starter breaker switch open or defective (CB6 or CB/SW1).	Reset breaker switch or replace if defective.
Starter relay does not activate.	Relay coil "open".	Check continuity of relay coil, replace relay if defective.
Starter relay (RL2) activates, starter motor does not run.	Relay contacts defective.	Replace starter relay.
Starter relay OK, sufficient battery voltage at starter motor, starter motor does not run.	Starter motor defective.	Rebuild or replace starter motor.

UNCONTROLLED COPY WHEN DOWNLOADED OR PRINTED

Visit www.enstromhelicopter.com for instructions to order an original manual and to register for email notification of updates.

C. Removal

(1) Disconnect the battery cables.

(2) Remove cowling and baggage box.

(3) Remove the access panels that connect the fan shroud to the main oil cooler to gain access to the starter mounting hardware.

(4) Disconnect the heater hose from the fan shroud.

(5) Remove hardware and loosen the strap that secures the starter housing to the alternator housing. Pivot the strap away from the starter.

NOTE: Early helicopters may have a bolt installed from the aft side of the fan shroud.

(6) If applicable, remove the starter housing bolt from the aft side of the fan shroud.

(7) Disconnect the power cable from the starter.

(8) Remove the hardware that secures the starter to the starter housing mount pad.

(9) Remove starter shim from mount pad area, if applicable.

NOTE: Refer to the manufacturer's manual for guidance pertaining to the shim installation.

D. Installation

NOTE: If applicable, ensure shim is installed between the mount pad and the starter housing.

NOTE: If required, check starter ring gear back lash in accordance with Lycoming Service Instruction No. 1447, latest revision.

(1) Install starter on engine pad.

(2) Secure starter with mounting hardware.

NOTE: Early helicopters may have a bolt installed from the aft side of the fan shroud.

(3) If applicable, install starter housing mount bolt in aft side of fan shroud.

(4) Install strap between starter housing and the alternator housing and safety.

(5) Connect battery cables and power cable to starter.

(6) Install fan shroud access panels in the engine compartment.

(7) Install baggage box and cowling.

UNCONTROLLED COPY WHEN DOWNLOADED OR PRINTED

Visit www.enstromhelicopter.com for instructions to order an original manual and to register for email notification of updates.

6-7 FUEL BOOST PUMP

A. General Information

For early 12V and 24V systems, the electric fuel boost system consists of the electric boost pump assembly and the boost pump breaker switch (CB12). Fuel boost pressure is monitored by an independent electric circuit comprised of the fuel pressure switch, red pressure status indicator (red and green indicators in early F models) and a circuit breaker (CB7). Low fuel boost pressure (example: electric boost pump off) will cause the red indicator to be energized. With sufficient fuel pressure (electric boost pump on) the red indicator will be extinguished. The indicator lamp has a press-to-test function for checking the lamp filament continuity.

For later 24V systems, the components which comprise the electric fuel boost system include boost pump assembly (BM), RFI filter (EF1), and boost pump circuit breaker switch (CB/SW2) (5 amp). Fuel boost pressure is monitored by an independent electric circuit comprised of the fuel pressure switch (S21) and indicator LOW FUEL PRESSURE on the annunciator panel. (Additional description of the low fuel pressure warning circuit is provided in paragraph 21-3, C.)

B. Troubleshooting

Problem	Cause	Required Action
As applicable: Either or both indicator lamps out (early 12V and 24V helicopters), low fuel pressure.	Indicator lamp filaments failed (L8 or L9).	Replace lamps.
	CB7 instrument breaker failed or open.	Reset or replace breaker.
Or, Annunciator panel segment out (later 24V helicopters), low fuel pressure.	Annunciator panel lamp failed (segment 7).	Replace lamp.
	Circuit breaker ANN PNL (CB48) failed or open.	Reset or replace circuit breaker.
	Fuel pressure switch faulty.	Replace switch.
	Boost pump circuit breaker switch (CB12) or BOOST PUMP (CB/SW2) open or failed.	Reset or replace circuit breaker.
	Boost pump motor (BM) failure.	

NOTE: Updates to lighting, caution/warning annunciators, and electrical schematics are provided in Section 21.

UNCONTROLLED COPY WHEN DOWNLOADED OR PRINTED

Visit www.enstromhelicopter.com for instructions to order an original manual and to register for email notification of updates.

6-8 LIGHTING

A. Forward Landing Light – Troubleshooting

NOTE: Paragraph 6-8, A through C, apply to early F-28F and 280F models. Refer to Paragraph 21-4 for troubleshooting procedures pertaining to later F and FX helicopters.

Problem	Cause	Required Action
Landing light inoperative.	Lamp filament burned out (L14).	Replace lamp.
	Landing light breaker (CB5) open or failed.	Reset or replace breaker.
	Inline fuse (F2) open (F-28F only).	Replace fuse.
	Landing light relay (RL4) open or shorted, contacts worn (F-28F only).	Replace relay RL4.
	Cyclic stick forward landing light switch failed (F-28F only).	Replace landing light switch.

B. Aft Landing Light – Troubleshooting

Problem	Cause	Required Action
Aft lamp inoperative.	Lamp filament burned out (L3).	Replace lamp.
	Circuit breaker switch (CB10) open or failed.	Reset or replace breaker.

C. Panel Lights – Troubleshooting

Problem	Cause	Required Action
Lights do not dim/lights inoperative.	Rheostat (R3) wiper faulty, rheostat windings open.	Replace rheostat.
	Rheostat (R3) knob loose on rheostat shaft.	Tighten set screw of knob.
	Panel light breaker switch (CB2) open or faulty.	Reset breaker, replace if defective.
NOTE: Illuminated legend bar lamps are not easily replaced. Replacement of bar is recommended if lamp failure occurs.		

UNCONTROLLED COPY WHEN DOWNLOADED OR PRINTED

Visit www.enstromhelicopter.com for instructions to order an original manual and to register for email notification of updates.

D. Navigation Lighting

NOTE: Paragraph 6-8, D, applies to early F-28F and 280F models. Refer to Paragraph 21-4 for troubleshooting procedures pertaining to later F and FX helicopters.

Problem	Cause	Required Action
Running lights inoperative.	Lamp filaments (L5-2) and (L5-1) burned out.	Replace lamps.
Tail lights inoperative	Lamp filaments (L4) or (L2) burned out.	Replace lamp.
All navigation lights inoperative (F-28F).	Navigation light circuit breaker tripped or faulty.	Reset or replace circuit breaker CB3.
Tail light inoperative (280F).	Lamp filament (L1) burned out. Circuit breaker CB3 tripped or faulty.	Replace lamp (L1), reset or replace circuit breaker CB3.
Right or left strobe lamps inoperative (L2-1, L2-2) (280F).	Strobe power supply (SLPS) faulty. NOTE: Lamps have separate power supplies.	Repair or replace strobe power supply.
Both left-right navigation lights and tail light inoperative (280F).	Navigation light circuit breaker open or faulty.	Reset or replace circuit breaker CB3.
Both right and left strobe lamps inoperative (280F).	Anti-collision light breaker (CB4) open or faulty.	Reset or replace circuit breaker CB4.
Anti-collision lamp inoperative (F-28F).	Lamp filament burned out.	Replace lamp (L11-1, L12-1).
Both anti-collision lamps inoperative (F-28F).	Circuit breaker (CB4) open or tripped.	Replace or reset breaker (CB4).
Both anti-collision lamps inoperative (F-28F).	Power supply faulty.	Repair or replace power supply.

.

UNCONTROLLED COPY WHEN DOWNLOADED OR PRINTED

Visit www.enstromhelicopter.com for instructions to order an original manual and to register for email notification of updates.

6-9 CLUTCH DISENGAGE WARNING LIGHT

NOTE: The following information pertains to early F-28F and 280F series helicopters. For helicopters equipped with the annunciator panel, refer to Paragraph 21-3, B.

A. General Information

The clutch disengage warning system consists of a red indicator lamp mounted in the instrument panel and a limit switch located on the clutch actuator mechanism. This circuit is protected with an inline fuse located in the instrument panel.

The system provides a visual cockpit warning indication of an improperly positioned clutch overcenter mechanism. The red warning cockpit lamp is illuminated whenever the clutch overcenter mechanism is not properly positioned tightly against the clutch side plates.

Troubleshooting this system consists mainly of clutch rigging checks, switch replacement, and indicator lamp or fuse replacement.

NOTE: Installation and rigging is covered in Paragraph 11-1, Clutch Control and Belt Tension Mechanism Rigging.

6-10 MANIFOLD PRESSURE OVERBOOST CAUTION LIGHT

NOTE: The following information pertains to early F-28F and 280F series helicopters. For helicopters equipped with the annunciator panel, refer to Paragraph 21-3, F.

A. General Information

The manifold overboost caution system consists of a pressure activated snap switch and associated amber indicator. System fault protection is provided by a single inline fuse (F17) located in the instrument panel.

Engine manifold pressure near maximum allowable will illuminate the amber caution lamp drawing the operator's attention to the manifold gauge for possible corrective action. The lamp activating switch operates from a tap in the aircraft manifold pressure instrument line. Transient pressures from quick throttle inputs may appear to illuminate the lamp at low gauge pressure readings. This occurs due to inherent dampening characteristics of the pressure gauge which prevent the needle from following transient pressures. Lamp filament and fuse continuity can be checked via the indicator press to test feature.

UNCONTROLLED COPY WHEN DOWNLOADED OR PRINTED

Visit www.enstromhelicopter.com for instructions to order an original manual and to register for email notification of updates.

6-11 HOURMETER

A. Troubleshooting

Problem	Cause	Required Action
Hour meter inoperative.	Inline fuse (F1) open.	Replace Fuse (F1).
	Oil pressure switch (OPS) failed.	Replace oil pressure switch (OPS).
	Hour meter faulty.	Replace hour meter (HM).

6-12 TRIM MOTORS

A. Troubleshooting

Problem	Cause	Required Action
Erratic or no trim motor operation.	Lateral limit switch S11 or S12 failed.	Replace S11 or S12 limit switch.
	Fore-aft limit switch S9 or S10 failed.	Replace S9 or S10 limit switch.
	Shorted motor TM1 or TM2.	Replace trim motor.
	Four-way cyclic switch faulty.	Replace four-way switch.
	Circuit breaker switch CB8 open or failed.	Reset or replace breaker CB8.

UNCONTROLLED COPY WHEN DOWNLOADED OR PRINTED

Visit www.enstromhelicopter.com for instructions to order an original manual and to register for email notification of updates.

6-13 AMMETER – CHARGING SYSTEM

A. Troubleshooting

Problem	Cause	Required Action
Ammeter shows continuous discharge (engine running).	Regulator failed or out of adjustment.	Adjust regulator per recommended specification. Replace if defective.
	Alternator breaker open or defective (CB1).	Reset or replace breaker (CB1).
	Alternator breaker (CB15) open or defective.	Reset or replace breaker (CB15).
	Overvoltage relay tripped or defective.	Reset overvoltage relay. Replace if defective.
	Alternator switch (S6) defective.	Replace switch (S6).
	Alternator windings shorting.	Service alternator per mfg. spec.
	Worn or loosened alternator belt.	Replace/tighten belt.

UNCONTROLLED COPY WHEN DOWNLOADED OR PRINTED

Visit www.enstromhelicopter.com for instructions to order an original manual and to register for email notification of updates.

6-14 INSTRUMENT CLUSTER TROUBLESHOOTING

A. Troubleshooting

Problem	Cause	Required Action
Fuel quantity indicator inoperative or erratic.	Instrument breaker (CB7) faulty or open.	Reset or replace breaker (CB7).
	Loose, damaged, broken ground wire from sending unit.	Inspect sending unit wiring – repair as necessary.
	Faulty module electronics.	Perform electrical check of module – see Figure 6-7.
	Faulty bracket connection in the fuel quantity assembly (Figure 13-19).	Abrade bracket surfaces (Para. 13-10, B, (4), (a.1), 2, NOTE).

B. Troubleshooting – Main Rotor Gearbox Temperature

Problem	Cause	Required Action
Erroneous indication or inoperative temperature meter	Instrument breaker CB7 open or faulty	Replace or reset breaker CB7
	Loose, damaged or broken ground wire from sending unit	Inspect sending unit wiring – repair as necessary
	Damaged thermocouple	Replace thermocouple wire. Use type approved for application
	Faulty module electronics	Perform electrical check of module – See Figure 6-6
Needle pegged beyond full scale	Excessive resistance in temperature probe line	Check robe wiring for break and repair as necessary
Needle pegged below zero	Shorted probe wire	Inspect probe wire for improper ground. Replace wire.

UNCONTROLLED COPY WHEN DOWNLOADED OR PRINTED

Visit www.enstromhelicopter.com for instructions to order an original manual and to register for email notification of updates.

C. Troubleshooting Amperage Meter

Problem	Cause	Required Action
Meter not operating	Loose connection at meter shunt	Tighten shunt terminals
	Faulty indicator	Perform electrical check of module See Figure 6-7

D. Oil Temperature Module

Problem	Cause	Required Action
Oil temperature	Breaker CB7 faulty or open	Reset or replace breaker
	Faulty indicator	Perform electrical check of module – see Figure 6-5
	Faulty sending unit ground	Repair or replace defective wiring
Needle pegs	Excessive resistance in temperature probe wiring	Check probe wiring for break and repair as necessary
	Defective sending unit	Replace temperature probe
Needle pegs below zero	Open in probe wiring	Inspect wiring from probe for improper ground. Replace ground wire.

E. Cylinder Head Temperature Module Troubleshooting

Problem	Cause	Required Action
Cylinder head temperature module inoperative	Circuit breaker CB7 open or faulty	Replace lamp
	Defective temperature probe	Replace temperature probe
Needle pegged at full scale	Excessive resistance in temp probe wiring	Check wiring for break. Repair or replace probe wire.
Needle pegged below zero	Shorted probe wire	Inspect wiring from probe for improper ground. Replace defective wiring.

UNCONTROLLED COPY WHEN DOWNLOADED OR PRINTED

Visit www.enstromhelicopter.com for instructions to order an original manual and to register for email notification of updates.

F. Instrument Cluster Module Check Procedure

This procedure will assist in determining the operational status of the individual instrument modules. The steps do not constitute an instrument calibration procedure. Resistance values given are approximate.

Equipment Required:

(1) 14 or 28 volt, 2 amp, filtered-regulated power supply.

(2) Variable power resistor or resistance decade box.

(3) Test Leads

Procedure:

(1) Position rear of module as pictured.

(2) Connect power and variable resistor per individual diagram.

(3) Adjust desired resistance level.

(4) Set power supply for 14 volts D.C. or 28 volts D.C., as appropriate.

(5) Do not use resistance values lower than those specified in the respective charts, instrument damage may result.

(6) Pin having “no connection” is 14 or 28 volt lighting.

(7) All grounds are power supply “negative output” connections.

(8) Proper instrument operation is observed when resistance values and scale readings correlate. See applicable chart for each module type.

NOTE: Excessive resistance or open in probe wires may cause meter needle to “peg” full scale.

A short or very low resistance in probe wires may cause meter needle to “peg” below zero.

UNCONTROLLED COPY WHEN DOWNLOADED OR PRINTED

Visit www.enstromhelicopter.com for instructions to order an original manual and to register for email notification of updates.

INTENTIONALLY LEFT BLANK

UNCONTROLLED COPY WHEN DOWNLOADED OR PRINTED

Visit www.enstromhelicopter.com for instructions to order an original manual and to register for email notification of updates.

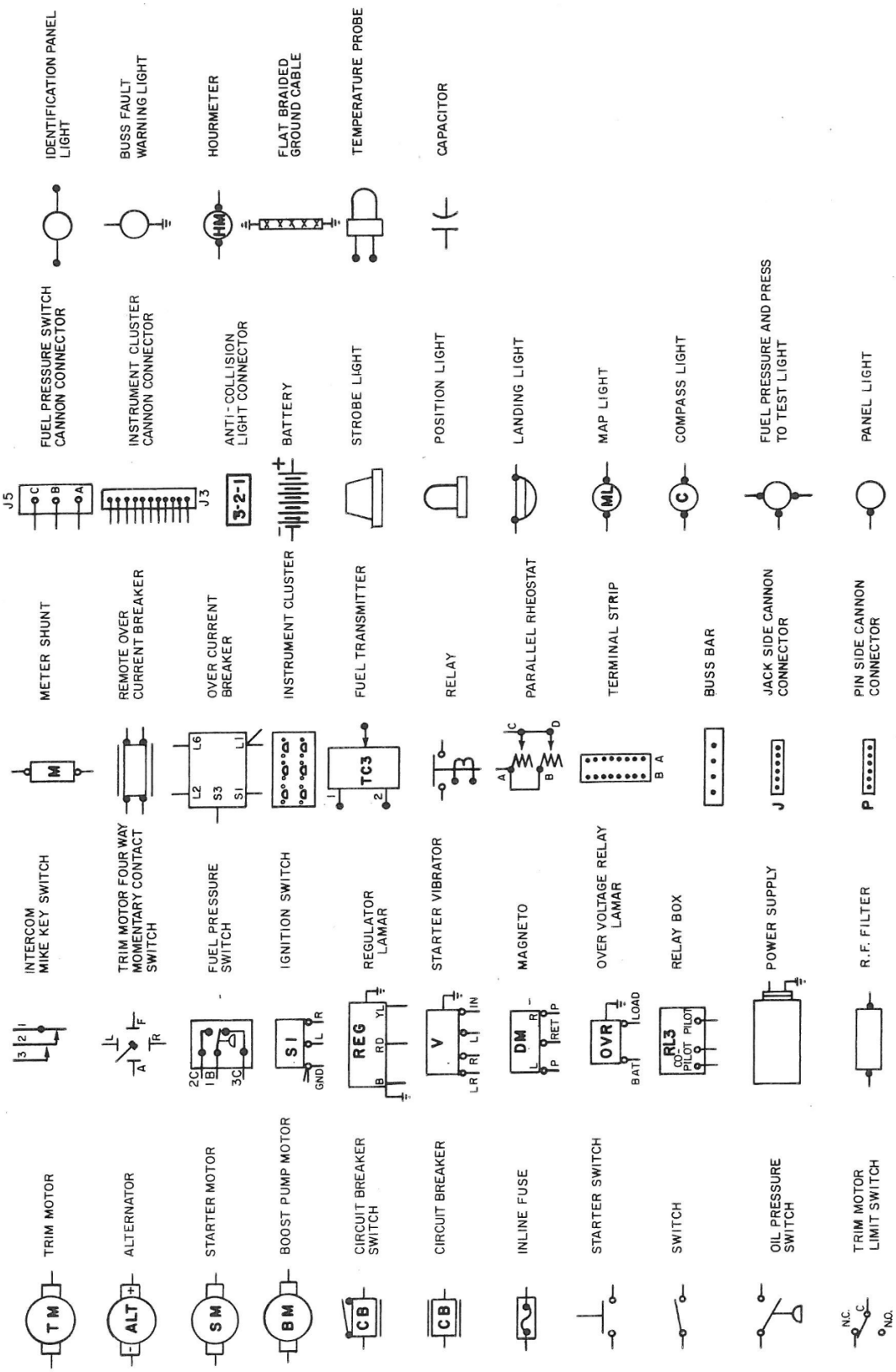

Figure 6-3. Electrical Symbols

UNCONTROLLED COPY WHEN DOWNLOADED OR PRINTED

Visit www.enstromhelicopter.com for instructions to order an original manual and to register for email notification of updates.

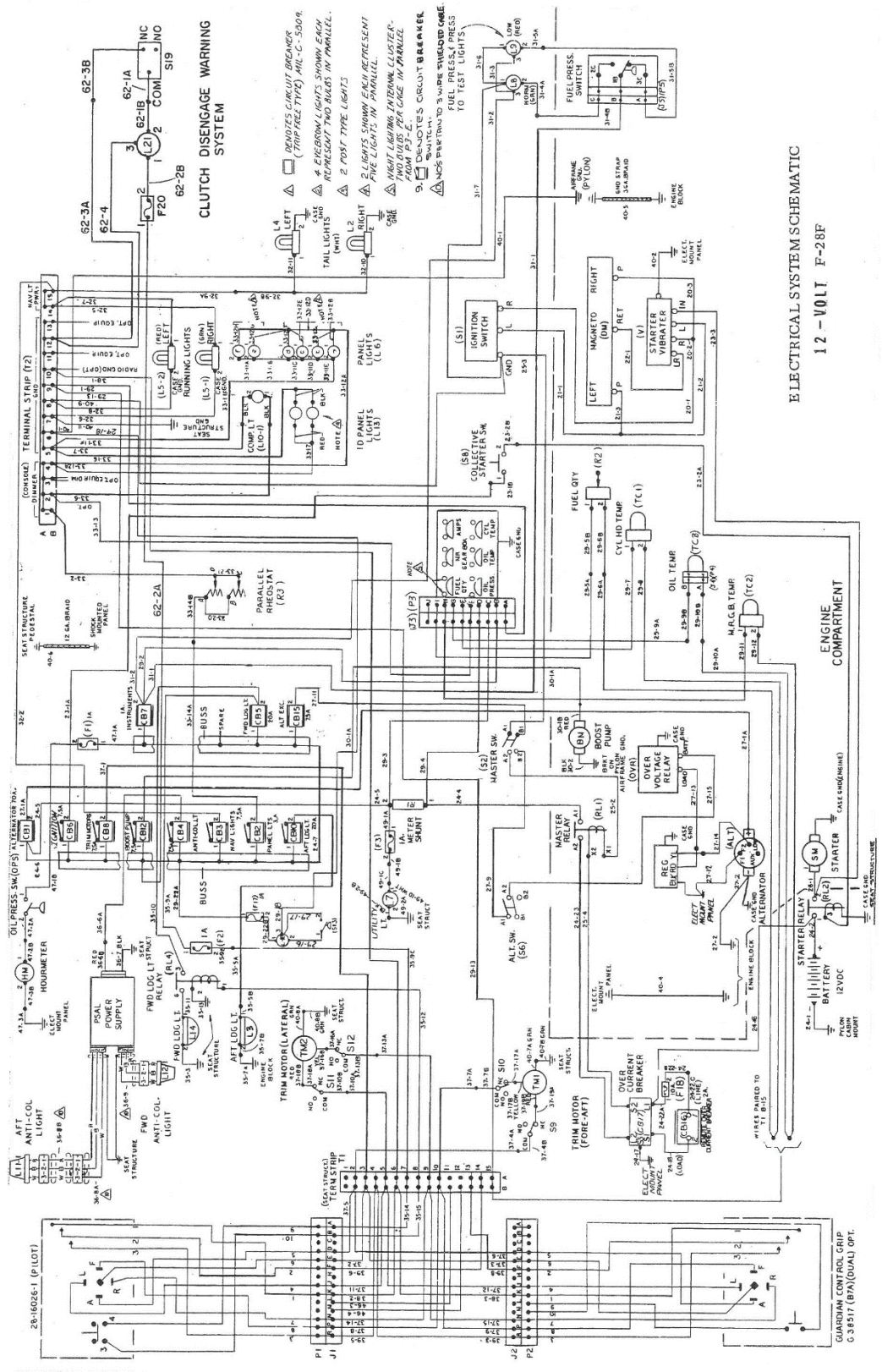

Figure 6-4. Electrical System Schematic 12-Volt F-28

UNCONTROLLED COPY WHEN DOWNLOADED OR PRINTED

Visit www.enstromhelicopter.com for instructions to order an original manual and to register for email notification of updates.

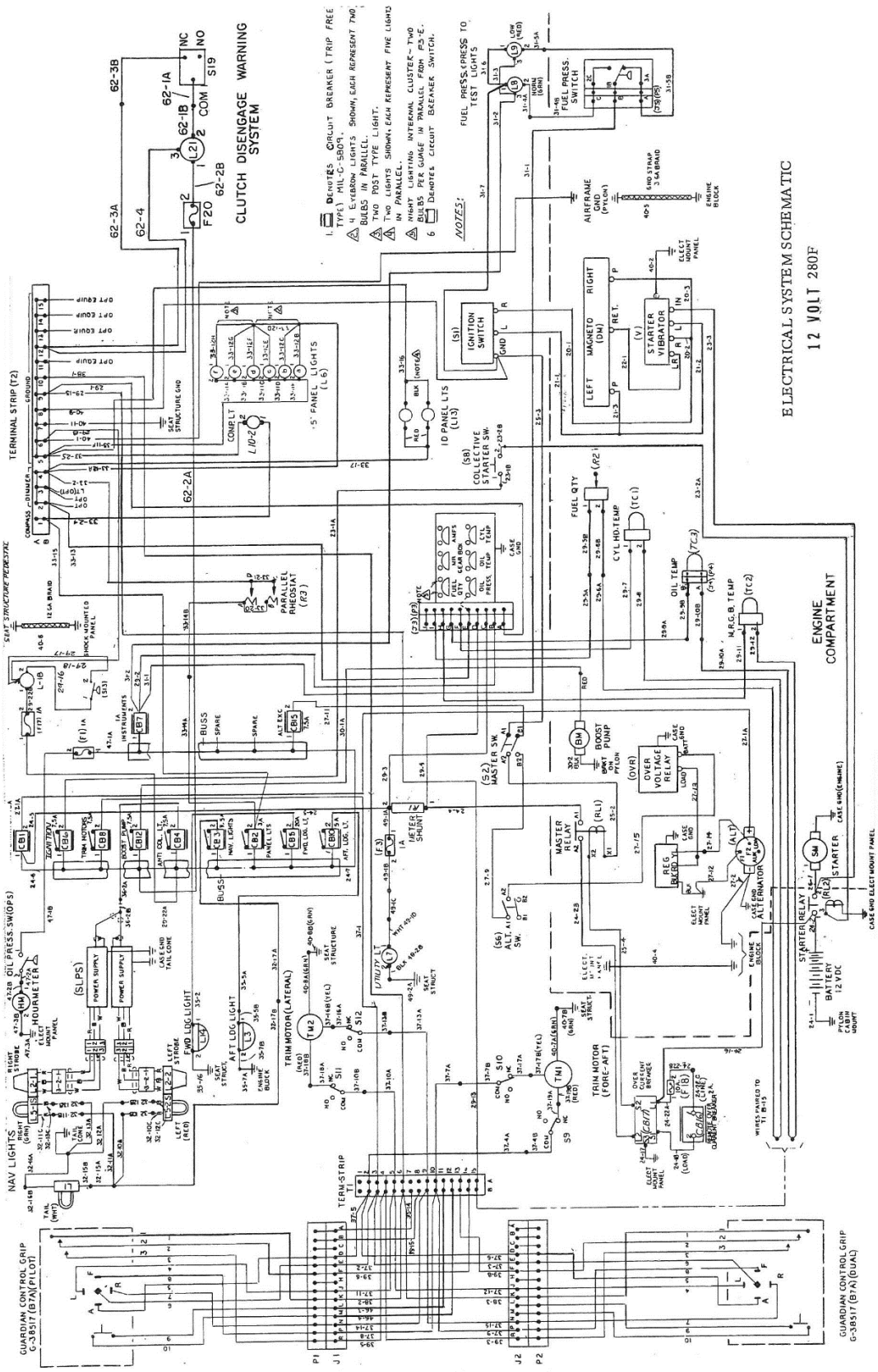

Figure 6-5. Electrical System Schematic 12 Volt 280F

UNCONTROLLED COPY WHEN DOWNLOADED OR PRINTED

Visit www.enstromhelicopter.com for instructions to order an original manual and to register for email notification of updates.

6-15 CHARTS

A. Electrical Loads

NOTE: The following data pertains to early F-28F and 280F (12V) helicopters.

The flight ampere load conditions chart describes the typical amperage required to operate specific standard electrical devices in the F-28F and 280F aircraft. Total electrical loads (amperes) are shown for various combinations of electrical devices under simultaneous operation. The electrical load totals can be used to estimate the percent reserve power available from the alternator when additional electrical equipment is installed on the aircraft. (Maximum continuous alternator output is 70 amperes).

Component Location Chart

Fuses

Location	Schematic ID	Description	F-28F	280F
Instrument panel	F1	Hourmeter fuse	X	X
Instrument panel	F2	Forward landing light fuse	X	X
Instrument panel	F3	Utility light fuse	X	X
Instrument panel	F17	Overboost light	X	X
Battery Box	F18	Overcurrent system	X	X
Instrument panel	F20	Clutch disengaged system	X	X

Relays

Location	Schematic ID	Description	F-28F	280F
Aft firewall co-pilot side	RL1	Master relay	X	X
Battery box	RL2	Starter relay	X	X
Behind seat deck Pilot side	RL4	Landing lamp relay		X

Special Switches

Location	Schematic ID	Description	F-28F	280F
Engine compartment cross tube co-pilot side	FPS	Fuel pressure switch	X	X
Instrument panel	OPS	Oil pressure switch	X	X
Instrument panel	S13	Turbo boost pressure		X
Instrument panel	S13	Turbo boost pressure	X	

UNCONTROLLED COPY WHEN DOWNLOADED OR PRINTED

Visit www.enstromhelicopter.com for instructions to order an original manual and to register for email notification of updates.

ELECTRICAL DEVICE	DAY							NIGHT				
	A	B	C	D	E	F	G	H	I	J	K	L
Boost Pump	5.5	5.5	5.5	5.5	5.5	5.5	5.5	5.5	5.5	5.5	5.5	5.5
Longitudinal Trim*	-	6.0	-	6.0	-	-	6.0	-	6.0	-	6.0	-
Lateral Trim*	-	-	6.0	-	6.0	-	-	6.0	-	6.0	-	-
Radio Transmit*	-	3.5	3.5	-	-	-	3.5	3.5	-	-	3.5	-
Radio Receive	0.6	0.6	0.6	0.6	0.6	0.6	0.6	0.6	0.6	0.6	0.6	0.6
Instrument Cluster	0.14	0.14	0.14	0.14	0.14	0.14	0.14	0.14	0.14	0.14	0.14	0.14
Master Relay	1.0	1.0	1.0	1.0	1.0	1.0	1.0	1.0	1.0	1.0	1.0	1.0
Stroke Kits (Total)	2.4	2.4	2.4	2.4	2.4	2.4	2.4	2.4	2.4	2.4	2.4	2.4
Position Lights - Right & Left	-	-	-	-	-	4.0	4.0	4.0	4.0	4.0	4.0	4.0
Panel Lights	-	-	-	-	-	2.0	2.0	2.0	2.0	2.0	2.0	2.0
Aft Position Light	-	-	-	-	-	1.6	1.6	1.6	1.6	1.6	1.6	1.6
Forward Landing Light 4509**	-	-	-	-	-	-	-	-	-	-	8.23	8.23
Forward Landing Light (4313)***	-	-	-	-	-	-	-	-	-	-	(20.8)	(20.8)
Aft Landing Lights**	-	-	-	-	-	-	-	-	-	-	3.14	3.14
	9.64	19.14		15.64		17.24	26.74		23.24		38.11	28.61
											(50.68)	(41.18)

NOTE: Flight condition "A" is day normal cruise
Flight condition "F" is night normal cruise

* Denotes intermittent use

** Denotes short duration use (5 minutes)

*** 4313 Landing lamp acceptable substitute

The above load conditions include typical electrical appliances for 280F series helicopters. If other special equipment is added, the loads for conditions A and F in the above table are to be modified.

280F Flight Mode Load Conditions – 12 Volt System

UNCONTROLLED COPY WHEN DOWNLOADED OR PRINTED

Visit www.enstromhelicopter.com for instructions to order an original manual and to register for email notification of updates.

	DAY					NIGHT						
ELECTRICAL DEVICE	A	B	C	D	E	F	G	H	I	J	K	L
Nav Lights 4 @ 1.61 amps each	-	-	-	-	-	6.44	6.44	6.44	6.44	6.44	6.44	6.44
Boost Pump	5.5	5.5	5.5	5.5	5.5	5.5	5.5	5.5	5.5	5.5	5.5	5.5
Longitudinal Trim*	-	6.0	-	6.0	-	-	6.0	-	6.0	-	6.0	-
Lateral Trim*	-	-	6.0	-	6.0	-	-	6.0	-	6.0	-	-
Radio - Transmit*	-	3.5	3.5	-	-	-	3.5	3.5	-	-	3.5	-
Radio - Receive	0.6	0.6	0.6	0.6	0.6	0.6	0.6	0.6	0.6	0.6	0.6	0.6
Instrument Cluster	0.14	0.14	0.14	0.14	0.14	0.14	0.14	0.14	0.14	0.14	0.14	0.14
Master Relay	1.0	1.0	1.0	1.0	1.0	1.0	1.0	1.0	1.0	1.0	1.0	1.0
Anti-Collision	7.0	7.0	7.0	7.0	7.0	7.0	7.0	7.0	7.0	7.0	7.0	7.0
Panel Lights	-	-	-	-	-	2.0	2.0	2.0	2.0	2.0	2.0	2.0
Forward Landing Light 4509**	-	-	-	-	-	-	-	-	-	-	8.23	8.23
Forward Landing Light (4313)***	-	-	-	-	-	-	-	-	-	-	(20.8)	(20.8)
Aft Landing Light 4509**	-	-	-	-	-	-	-	-	-	-	8.23	8.23
Aft Landing Light (4313)***	-	-	-	-	-	-	-	-	-	-	(20.8)	(20.8)
Landing Light Relay	-	-	-	-	-	-	-	-	-	-	0.21	0.21
	14.24	23.74		20.24		22.68	32.18		28.68		48.85	39.35
											(73.99)	(64.49)

NOTE: Flight condition "A" is day normal cruise
Flight condition "F" is night normal cruise
* Denotes intermittent use
** Denotes short duration use (5) minutes)
*** 4313 Landing lamp acceptable substitute

The above load conditions include typical electrical appliances for F-28F series helicopters. If other special equipment is added, the loads for conditions A and F in the above table are to be modified.

UNCONTROLLED COPY WHEN DOWNLOADED OR PRINTED
Visit www.enstromhelicopter.com for instructions to order an original manual and to register for email notification of updates.

AMOUNT	LOCATION	ASSEMBLY MANUFACTURER	ASSEMBLY NO.	BULB NO. 12 Volt 4313 or 4509	BULB NO. 28 Volt 4591
1	Aft Landing Light	Enstrom		4313 or 4509	4596
1	Forward Landing Light	Enstrom		4313 or 4509	4596
1	Forward, Right Position Light - Green	Grimes	A-1285-G-12	1512	1524
1	Forward, Left Position Light - Red	Grimes	A-1285-R-12	1512	1524
2	Aft Position Lights	Grimes	A-1285-C-12	1512	1524
2	Anti-Collision Lights	Whelen	HDA-14	A469A Flash Tube	A469A
1	Map Light	Grimes	15-007-5	1816	313
2	Post Lights	Grimes	A8970	330	327
8	Eyebrow Lights	Grimes	B4855-B-330	330	327
1	Fuel Boost Light - Red	Dialight	803-1710-0331-504	1815	1819
2	Switch Panel Placard Lights	Enstrom	28-18091-1 (Master Switch, etc) 28-18091-3 (Alternator, etc)	Replace Assembly	
1	Overboost Caution Light	Dialight		1815	1819
1	Clutch Disengage Warning Light	Dialight	803-1710-0331-504	1815	1819

F-28F Lamp Replacement Chart

UNCONTROLLED COPY WHEN DOWNLOADED OR PRINTED

Visit www.enstromhelicopter.com for instructions to order an original manual and to register for email notification of updates.

AMOUNT	LOCATION	ASSEMBLY MANUFACTURER	ASSEMBLY NO.	BULB NO. 12 Volt	BULB NO. 24 Volt
1	Aft Landing Light	Enstrom		4406	4591
1	Forward Landing Light	Enstrom		4313 or 4509	4596
1	Right Side Position Light and Strobe	Whelen (modified by Enstrom)	A650PG (Enstrom 28-21048-3)	W1290-14 A610 Strobe	W1290-28 A610
1	Left Side Position Light and Strobe	Whelen (modified by Enstrom)	A6050PR (Enstrom 28-21048-1)	W1290-14 A610 Strobe	W1290-28 A610
1	Aft Position Light	Whelen	A555	A508-14	A508-28
1	Map Light	Grimes	15-007-5	1816	313
2	Post Lights	Grimes	A8970	330	327
8	Eyebrow Lights	Grimes	B-4855-B330	330	327
1	Fuel Boost Light - Red	Dialight	803-1710-0331-504	1815	1819
1	Fuel Boost Light - Green	Dialight	804-1710-0332-504	1815	1819
2	Switch Panel Placard Lights	Enstrom	28-18091-1 (Master Switch, etc) 28-18091-3 (Alternator, etc)	Replace Assembly	
1	Overboost Caution Light	Dialight		1815	1819
1	Clutch Disengage Warning Light	Dialight	803-1710-0331-504	1815	1819

280F Lamp Replacement Chart

UNCONTROLLED COPY WHEN DOWNLOADED OR PRINTED

Visit www.enstromhelicopter.com for instructions to order an original manual and to register for email notification of updates.

SECTION 7

INSTRUMENTS

TABLE OF CONTENTS

Paragraph		Page
7-1	**Instrument Panel**	**MM-7-3**
7-2	**Altimeter**	**MM-7-3**
	A. Description	MM-7-3
	B. Altimeter-Troubleshooting	MM-7-3
7-3	**Airspeed Indicator**	**MM-7-8**
	A. Description	MM-7-8
	B. Airspeed Indicator-Troubleshooting	MM-7-8
7-4	**Engine & Rotor Tachometer**	**MM-7-9**
	A. Description	MM-7-9
	B. Engine & Rotor Tachometer-Troubleshooting	MM-7-9
7-5	**Fuel Quantity Indicator**	**MM-7-9**
	A. Description	MM-7-9
	B. Fuel Quantity Indicator-Troubleshooting	MM-7-10
7-6	**Engine Oil Pressure Gauge**	**MM-7-10**
	A. Description	MM-7-10
	B. Engine Oil Pressure Gauge-Troubleshooting	MM-7-10
7-7	**Main Rotor Transmission Temperature Indicator**	**MM-7-11**
	A. Description	MM-7-11
	B. Main Rotor Transmission Temperature Indicator-Troubleshooting	MM-7-11
7-8	**Engine Oil Temperature Indicator**	**MM-7-11**
	A. Description	MM-7-11
	B. Engine Oil Temperature Indicator-Troubleshooting	MM-7-11
7-9	**Ammeter**	**MM-7-12**
	A. Description	MM-7-12
	B. Ammeter-Troubleshooting	MM-7-12
7-10	**Cylinder Temperature Indicator**	**MM-7-13**
	A. Description	MM-7-13
	B. Cylinder Temperature Indicator-Troubleshooting	MM-7-13
7-11	**Exhaust Gas Temperature Indicator (EGT)**	**MM-7-13**
	A. Description	MM-7-13
	B. EGT Readings at Cruise	MM-7-13
	C. EGT – Functional Check	MM-7-14
	D. EGT Calibration	MM-7-14
7-12	**Manifold Pressure & Fuel Flow**	**MM-7-15**
	A. Description	MM-7-15
	B. Manifold Pressure Indicator-Trouble Shooting	MM-7-15
	C. Fuel Flow Indicator-Troubleshooting	MM-7-15
7-13	**Outside Air Temperature Indicator**	**MM-7-16**
	A. Description	MM-7-16
7-14	**Magnetic Compass (F-28F)**	**MM-7-16**
	A. Description	MM-7-16

UNCONTROLLED COPY WHEN DOWNLOADED OR PRINTED

Visit www.enstromhelicopter.com for instructions to order an original manual and to register for email notification of updates.

SECTION 7

INSTRUMENTS

TABLE OF CONTENTS – CONTINUED (PAGE MM-7-2)

Paragraph		Page
7-15	**Magnetic Compass (280F)**	**MM-7-16**
	A. Description	MM-7-16
7-16	**Hourmeter**	**MM-7-17**
	A. Description	MM-7-17
7-17	**Pitot Static System**	**MM-7-17**
	A. Description	MM-7-17
	B. Pitot Tube-Description	MM-7-17
7-18	**Replacement of Instruments**	**MM-7-17**
	A. Replacement Procedures	MM-7-17
7-19	**Inspection of Instruments**	**MM-7-19**
	A. Inspect as Follows	MM-7-19
7-20	**Calibration of Instruments & Indicators**	**MM-7-19**
	A. General Information	MM-7-19
7-21	**Engine Monitor**	**MM-7-19**
	A. Description	MM-7-19
	B. Maintenance	MM-7-20
	C. CHT Probe Installation – Engine Monitor EDM-700	MM-7-20
	D. Programming Alarm Limits – Engine Monitor EDM-700	MM-7-22
	E. Troubleshooting	MM-7-22
7-22	**Clock**	**MM-7-25**
7-23	**Outside Air Temperature Indicator (OAT)**	**MM-7-25**
7-24	**Rotor RPM Magnetic Pick-Up**	**MM-7-25**
	A. Removal	MM-7-25
	B. Inspection	MM-7-25
	C. Repair	MM-7-26
	D. Installation	MM-7-26

UNCONTROLLED COPY WHEN DOWNLOADED OR PRINTED

Visit www.enstromhelicopter.com for instructions to order an original manual and to register for email notification of updates.

7-1 INSTRUMENT PANEL

The instrument panel is centrally located in the front of the cabin for optimum visibility by either pilot or co-pilot. The "F" model instrument panel is mounted at an 8° angle. Refer to Figures

NOTE: Instrument panel angle is required when replacing an attitude gyro (horizontal horizon) designed to operate at the same angle.

7-2 ALTIMETER

A. Description

The altimeter indicates the height of the helicopter above sea level. It is operated by static air pressure derived from the airspeed pitot-static system. The altimeter is of the sensitive type that provides a height reading from 0 to 20,000 feet. The long hand reads in increments of 100 feet, the middle hand in increments of 1,000 feet, and the short hand in increments of 10,000 feet. The control knob on the face of the altimeter adjusts the barometric pressure reading to set field altitude.

CAUTION: Never apply positive pressure to static lines with the instruments connected; this will damage the instrument mechanism.

B. Altimeter – Troubleshooting

Problem	Cause	Required Action
Indicating hands fail to respond.	Static pressure line obstructed.	Disconnect static pressure line from instruments and blow with compressed air.
	Static pressure connection improperly made.	Check static pressure lines and connect correctly.
Indications are obviously incorrect.	Leaks in static pressure line and/or leaks in cases of instruments in same system.	Replace damaged tubing and/or check instruments for leaks.
	Defective instrument.	Replace altimeter.
Indicating hands vibrate.	Excessive vibration of static pressure tubing.	Anchor tubing with tube clamps.

UNCONTROLLED COPY WHEN DOWNLOADED OR PRINTED

Visit www.enstromhelicopter.com for instructions to order an original manual and to register for email notification of updates.

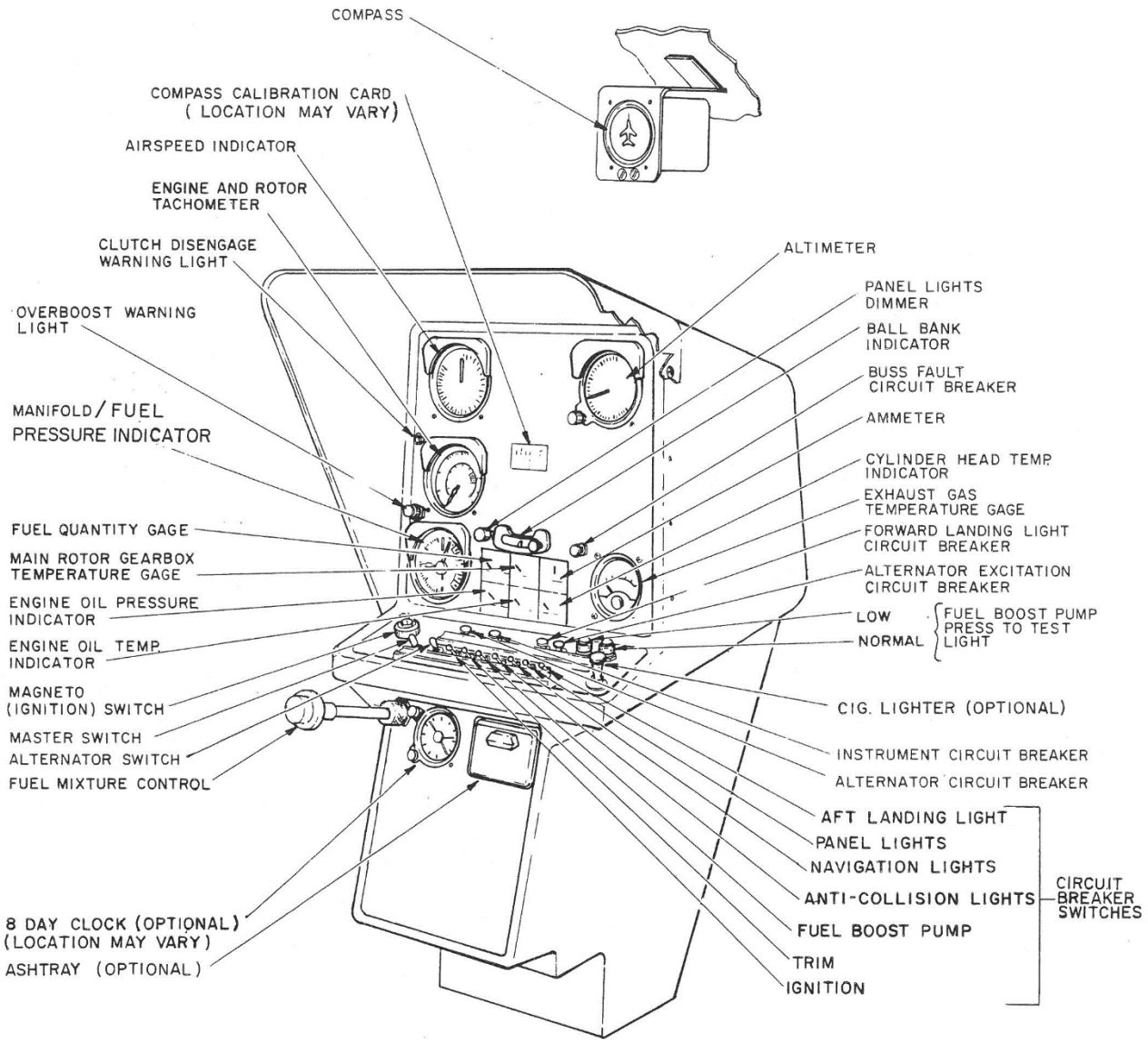

Figure 7-1. Early F-28F Instruments and Instrument Panel

UNCONTROLLED COPY WHEN DOWNLOADED OR PRINTED

Visit www.enstromhelicopter.com for instructions to order an original manual and to register for email notification of updates.

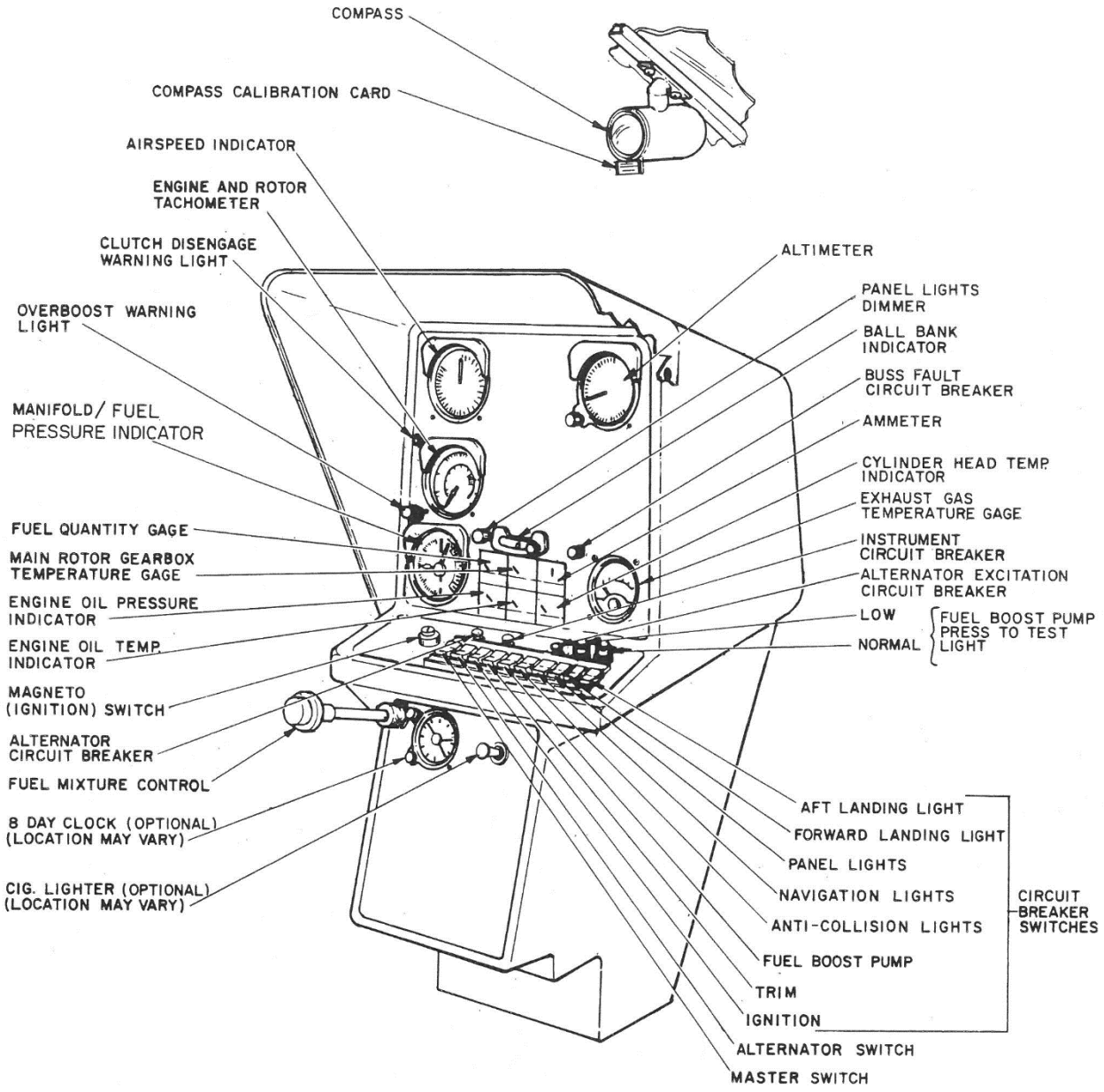

Figure 7-2. 280F Instruments and Instrument Panel

UNCONTROLLED COPY WHEN DOWNLOADED OR PRINTED

Visit www.enstromhelicopter.com for instructions to order an original manual and to register for email notification of updates.

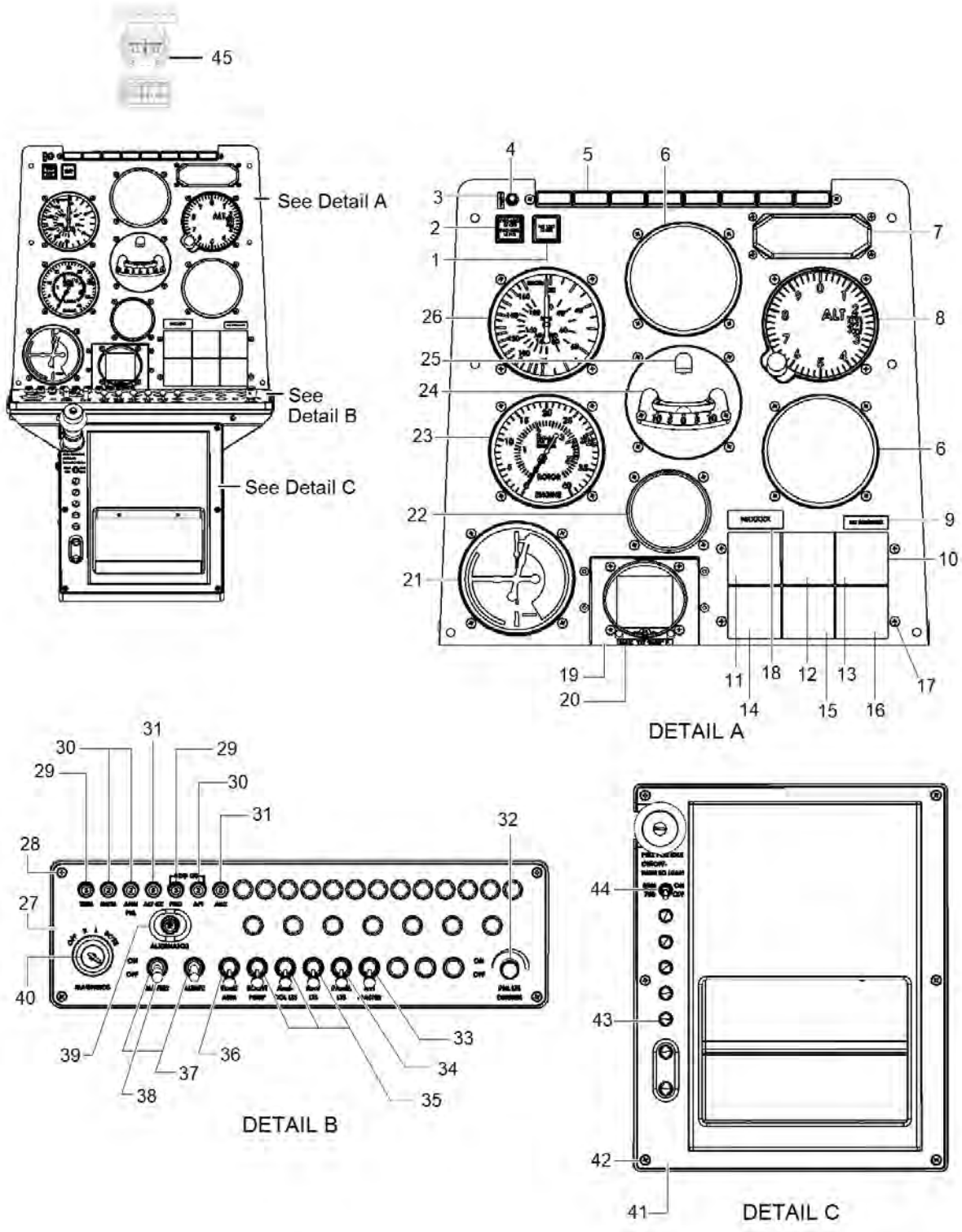

Narrow panel configuration shown.
Instrument face and control features and switch labels may vary.

Figure 7-2.1 F-28F (later) and 280FX Instruments and Instrument Panel

UNCONTROLLED COPY WHEN DOWNLOADED OR PRINTED

Visit www.enstromhelicopter.com for instructions to order an original manual and to register for email notification of updates.

Figure 7-2.1 F-28F (later) and 280FX Instruments and Instrument Panel Legend

1. Aft Landing Light Annunciator
2. FWD Landing Light Annunciator
3. Placard
4. Switch
5. Light Assembly Annunciator
6. Instrument Cutout Cover
7. Cover
8. Altimeter
9. Placard
10. Instrument Cluster
11. Fuel Quantity Gauge
12. Oil Temp. MRGB Guage
13. Ammeter Gauge
14. Eng. Oil Press. Gauge
15. Eng. Oil Temp. Gauge
16. Cylinder Temp. Gauge
17. Screw
18. Placard
19. Engine Monitor
20. Placard
21. Manifold Pressure and Fuel Flow Gauge
22. Cover
23. Dual Tachometer
24. Inclinometer
25. Post Lite
26. Airspeed Indicator
27. Illuminated Panel
28. Screw
29. Circuit Breaker (3 Amp)
30. Circuit Breaker (2 Amp)
31. Circuit Breaker (5 Amp)
32. Knob
33. Switch (35 Amp)
34. Switch (3 Amp)
35. Switch (5 Amp)
36. Switch (7 ½ Amp)
37. Switch-Toggle
38. Cap
39. Circuit Breaker
40. Ignition Switch
41. Illuminated Radio Panel
42. Screw
43. Plug
44. Switch
45. Compass

UNCONTROLLED COPY WHEN DOWNLOADED OR PRINTED

Visit www.enstromhelicopter.com for instructions to order an original manual and to register for email notification of updates.

7-3 AIRSPEED INDICATOR

A. Description

The single scale airspeed indicator is calibrated in miles per hour or knots per hour and provides an indicated airspeed reading at any time during forward flight. The reading is obtained by measuring the difference between impact air pressure and the static vent. The pitot tube, which provides the impact air pressure source, is located on the lower side of the cabin nose section. Static air pressure for instrument operation is derived from two static vents located on either side of the tail cone assembly. The openings in the pitot tube and static vent ports must be maintained obstruction-free and clean at all times for proper instrumentation operation.

CAUTION: NEVER APPLY POSITIVE PRESSURE TO STATIC LINES WITH THE INSTRUMENTS CONNECTED; THIS WILL DAMAGE THE INSTRUMENT MECHANISM.

B. Airspeed Indicator - Troubleshooting

Problem	Cause	Required Action
Airspeed indicator needle fails to respond.	Incorrect pitot tube hookup.	Check tubing connection and make necessary corrections.
	Obstruction in pitot lines.	Disconnect pitot line from pitot head and instruments and static line from fuselage and instruments, clear lines with compressed air. Check pitot tube drain hole.
Oscillation of airspeed indicator.	Leak in pitot or static lines.	Check all connections and check flexible hoses at back of instrument for leakage.
	Moisture in pitot or static lines.	Disconnect pitot line from instrument and static line from fuselage flanges and instruments, clear lines with compressed air. Check pitot drain hole.

UNCONTROLLED COPY WHEN DOWNLOADED OR PRINTED

Visit www.enstromhelicopter.com for instructions to order an original manual and to register for email notification of updates.

7-4 ENGINE & ROTOR TACHOMETER

A. Description

The engine and rotor tachometers are combined on a single indicator (twin tach) with concentric scales calibrated in engine and rotor rpm. The needle marked "E" indicates engine rpm, while the needle marked "R" indicates rotor rpm. The tachometer is mechanically connected to the rotor assembly and engine assembly through flexible drive cables.

B. Engine & Rotor Tachometer – Troubleshooting

Problem	Cause	Required Action
NOTE: The engine and rotor rpm tach cables can be switched at the back of the instrument to isolate an issue if it is limited to either the engine or rotor rpm tach cable.		
Fluctuating needle(s).	Binding cable.	Lubricate cable.
	Defective instrument.	Replace instrument.
No reading on indicator.	Twisted or broken cable or tach drive belts.	Replace cable or drive belts.
Needles either permanent or intermittent.	Defective instrument.	Replace instrument.
	Reverse installation of cable.	Install cables in correct position.
Needles do not superimpose.	Instrument out of tolerance.	Check tolerance: 2900 ± 25 rpm, 3050 ± 25 rpm. Spread between needles 1/4 of needle width maximum.
	Tach drive belts slipping or broken.	Replace drive belts.

7-5 FUEL QUANTITY INDICATOR

A. Description

The fuel quantity gauge continuously indicates the total quantity of fuel. It is electrically actuated by a float type sending unit located in the right-hand fuel tank.

NOTE: See Paragraph 13-10, B, (3) for gauge calibration procedure and adjustments.

UNCONTROLLED COPY WHEN DOWNLOADED OR PRINTED

Visit www.enstromhelicopter.com for instructions to order an original manual and to register for email notification of updates.

B. Fuel Quantity Indicator - Troubleshooting

Problem	Cause	Required Action
Indicator registers "F", or consistently high reading (battery switch on).	Poor connections or sender ground.	Clean and tighten connection.
	Faulty bracket connection (Figure 13-19).	Abrade bracket surfaces (Para. 13-10, B, (4), (a.1), 2, NOTE).

7-6 ENGINE OIL PRESSURE GAUGE

A. Description

The engine oil pressure gauge indicates the pressure in the engine oil lines in pounds per square inch.

CAUTION: LOW OIL PRESSURE CAN RESULT FROM IMPROPER OIL LEVEL, INCORRECT OIL VISCOSITY, FAULTY OIL PUMP, OR BEARING FAILURE.

B. Engine Oil Pressure Gauge - Troubleshooting

Problem	Cause	Required Action
Low reading on oil pressure gauge.	Kinked tubing or obstruction in tubing.	Replace or clean tubing.
	Instrument out of tolerance.	Replace instrument.
Sticking oil pressure indicator.	Defective gauge.	Replace gauge.
Sluggish oil pressure reading.	Sludge or heavy oil in line.	Bleed line and service with engine oil, or in cold climates use kerosene.
	Safety orifice in engine fitting partially blocked by debris.	Remove engine fitting and blow clear.
Fluctuating oil pressure.	Air in pressure line.	Service oil pressure line with engine oil.

UNCONTROLLED COPY WHEN DOWNLOADED OR PRINTED

Visit www.enstromhelicopter.com for instructions to order an original manual and to register for email notification of updates.

7-7 MAIN ROTOR TRANSMISSION TEMPERATURE INDICATOR

A. Description

The main rotor transmission temperature indicator is located in the instrument cluster. It is electrically operated by a temperature sensitive heat probe connected to the transmission.

B. Main Rotor Transmission Temperature Indicator – Troubleshooting

Problem	Cause	Required Action
Open circuit – no reading.	Check continuity.	Clean and tighten ground connection.
	Blown fuse	Replace fuse.

7-8 ENGINE OIL TEMPERATURE INDICATOR

A. Description

The engine oil temperature indicator measures engine oil temperature electrically by means of a resistance probe installed on the left side of the engine aft of the oil filter.

B. Engine Oil Temperature Indicator – Troubleshooting

Problem	Cause	Required Action
No reading on oil temperature indicator with battery switch on, either constant or intermittent.	Open circuit.	Repair or replace leads.
	Poor ground at panel.	Repair ground.
	Open or short circuit in indicator.	Replace indicator.
Reading off scale at low temperature end or low reading, either constant or intermittent.	Short circuit in leads from resistance probe to indicator.	Make continuity check and repair or replace lead.
	Short circuit in probe.	Replace probe. NOTE: Do not use thread lube when installing new probe.

UNCONTROLLED COPY WHEN DOWNLOADED OR PRINTED

Visit www.enstromhelicopter.com for instructions to order an original manual and to register for email notification of updates.

7-9 AMMETER

A. Description

The ampmeter indicates the amount of electric current supplied by the alternator to the battery and electrical bus.

B. Ammeter – Troubleshooting

Problem	Cause	Required Action
No reading or erratic reading with battery and alternator switch on and engine at idle rpm.	Worn brushes, burned commutator, belt slippage or broken.	Repair or replace alternator, tighten belt, or replace belt.
Ø reading or showing discharge.	Overvoltage relay kicked out.	Reset (See Section 6).
Excessive charge or discharge in excess of 5-10 minute duration.	Faulty voltage regulator.	Replace.
	Loose or corroded connections in VR circuit.	Check as indicated, especially the ground connection.

NOTE: Normal operating system should show a medium to heavy charge rate just after engine is started. If the battery is in good condition, it will accept this charge until the set system voltage is reached (14 volts) in approximately 8-10 minutes. At this point the ammeter should drop to about zero or just above, depending on system load.

Ø reading everything is functional.	Defective meter or connections.	Check out and/or replace meter as required.

UNCONTROLLED COPY WHEN DOWNLOADED OR PRINTED

Visit www.enstromhelicopter.com for instructions to order an original manual and to register for email notification of updates.

7-10 CYLINDER TEMPERATURE INDICATOR

A. Description

The cylinder temperature indicator measures the cylinder head temperature (CHT) by means of electric current from a temperature probe located in the bottom of No. 3 cylinder head.

B. Cylinder Temperature Indicator – Troubleshooting

Problem	Cause	Required Action
NOTE: The main transmission temperature probe and the CHT probe are the same part and can be swapped for troubleshooting.		
Temperature reading high throughout scale.	Poor connections or partial break in leads.	Check continuity of leads. Repair or replace faulty leads.
	Defective instrument.	Remove instrument for overhaul.
No reading, either permanent or intermittent.	Break in lead; break in thermocouple.	Repair or replace lead; replace thermal switch.
	Faulty indicator.	Remove instrument for overhaul.
Low reading, either permanent or intermittent.	Poor connection or short circuit.	Clean and tighten connections. Eliminate short circuit.

7-11 TURBINE INLET TEMPERATURE (TIT) INDICATOR

NOTE: The TIT indication on early F series helicopters was initially presented on an analog instrument labeled as an “EGT” indicator. The analog instrument was replaced by a graphic engine monitoring (GEM) system or engine data management (EDM) system. Discussion relevant to both TIT indication systems is present in steps A through C below. Discussion relevant to the original analog instrument is presented in step D below. Further discussion relevant to the GEM and EDM systems is presented in Paragraph 7-21.

A. Description

One of the most important factors in flying an aircraft is to maintain the correct fuel/air mixture. Proper mixture to the engine will give maximum range, economical operation, and maximum service life. Improper mixture will prove costly in fuel economy and maintenance costs, as well as shorten the life of the engine. The most accurate method for determining the correct fuel/air ratio is a sensitive and fast responding turbine inlet temperature (TIT). The TIT indication operates off a heat sensitive probe located in the exhaust system just forward of the turbocharger.

B. TIT Readings at Cruise

(1) Turbine inlet temperature (TIT) should be used as an aid for fuel mixture leaning in cruising flight at 75% power or less, i.e. 29 inches manifold pressure and 3050 rpm.

UNCONTROLLED COPY WHEN DOWNLOADED OR PRINTED

Visit www.enstromhelicopter.com for instructions to order an original manual and to register for email notification of updates.

(2) To obtain a best economy mixture, lean to 1650°F TIT. To obtain a best power mixture, lean to 1550°F TIT. Do not exceed 1650°F TIT. Operation on the lean side of peak TIT is not approved. Also, any change in altitude or power will require a recheck of the TIT indication.

CAUTION: FREQUENT OPERATION APPROACHING OR ABOVE 1650°F MAY ACCELERATE DEGRADATION OF EXHAUST SYSTEM COMPONENTS.

(a) Fuel Mixture: Engine may be leaned at 29" MP or below to 1600°F on rich side of peak. Never exceed 1650°F TIT. Mixture must be full rich for landing and takeoff regardless of power for proper engine cooling.

C. Functional Check

CAUTION: DO NOT OPERATE ABOVE 1600° F TIT NOR WITH A FUEL FLOW SETTING LESS THAN 80 POUNDS PER HOUR AT 75% POWER (28.0 INCHES MP) UNTIL A CALIBRATION CHECK HAS BEEN COMPLETED AFTER THE TIT SYSTEM OR ANY PART THEREOF HAS BEEN REPLACED.

(1) Due to the narrow margin of temperature error allowed while operating at or near 1650°F TIT, it is recommended that at each 100 hour inspection, or at any time an error is suspected, the analog, GEM, EDM system, as applicable, be tested for proper calibration

D. Calibration – Analog Instrument

Instructions for testing and calibrating of the analog system may be found in the Alcal EGT Operating Instruction Manual AR70-155. It is recommended that a log book entry be made during the next flight of the fuel flow reading with the power set at 29" manifold pressure, rpm at 3050, and mixture leaned to 1650°F. A normal fuel flow indication would be 83 pounds per hour plus or minus 3 pounds per hour. A variation exceeding this range would indicate that the EGT is reading either high or low respectively.

Example: Mixture normally leaned to 1650°F (TIT), fuel flow in excess of 86 pounds per hour -- actual (TIT) temperature is lower than indicated.

This information, if monitored, will give operators sufficient warning if there is a problem developing in either the engine or the system. A (TIT) reading that varies from normal and is engine related will be apparent by other symptoms.

Example: Partially restricted injector nozzle -- high fuel flow, low (TIT) with rough running engine.

CAUTION: DO NOT OPERATE ABOVE 1600°F (TIT) NOR WITH A FUEL FLOW SETTING LESS THAN 80 POUNDS PER HOUR AT 75% POWER (29.0" MP) UNTIL A CALIBRATION CHECK HAS BEEN COMPLETED AFTER THE SYSTEM OR ANY PART THEREOF HAS BEEN REPLACED.

After replacement of broken instrument or at 100 hour inspection, it is recommended that a functional check be made of the system using an ALCOR AlCal Mark V Calibrator in accordance with these instructions.

UNCONTROLLED COPY WHEN DOWNLOADED OR PRINTED

Visit www.enstromhelicopter.com for instructions to order an original manual and to register for email notification of updates.

7-12 MANIFOLD PRESSURE & FUEL FLOW INDICATOR

A. Description

The manifold pressure indicator is connected to the primary airflow system at the #3 cylinder and measures power being produced and used. The fuel flow indicator which is mounted in the same instrument is connected to the fuel flow system at the flow divider. It indicates fuel flow in relation to manifold pressure.

B. Manifold Pressure Indicator - Troubleshooting

Problem	Cause	Required Action
Excessive error at existing barometric pressure.	Water or restriction in line between instrument and engine.	Disconnect at instrument and blow out line.
Sluggish operation of needle.	Damaged or restricted line.	Remove line and blow out restriction. Replace line if damaged. NOTE: Restricted fitting just aft of instrument must also be removed before blowing out line.
	Defective instrument.	Replace instrument.

C. Fuel Flow Indicator - Troubleshooting

Problem	Cause	Required Action
Low reading on fuel flow indicator.	Kinked tubing or obstruction in tubing.	Replace or clean tubing.
	Leak in fuel nozzle lines.	Repair leak or replace line.
	Instrument out of tolerance.	Replace instrument.
Sticking fuel flow indicator.	Defective instrument.	Replace instrument.

UNCONTROLLED COPY WHEN DOWNLOADED OR PRINTED

Visit www.enstromhelicopter.com for instructions to order an original manual and to register for email notification of updates.

7-13 OUTSIDE AIR TEMPERATURE INDICATOR

A. Description

The outside air temperature indicator is a direct reading, bi-metallic instrument with a stainless steel probe. This instrument provides ambient temperature information which, when utilized, will aid in determining performance capability of the helicopter at the existing climatic condition. The indicator is located in the top of the cabin.

7-14 MAGNETIC COMPASS (Early F-28F and 280F Models)

A. Description

(1) Vertical Card Compass (Early F-28F)

The vertical card compass is a dry compass utilizing eddy current dampening. It consists of a 2" vertical rotating dial and is compared with a fixed miniature airplane (lubber line) to present magnetic heading of the aircraft at all times. Heading information is more natural because the heading is read at the 12 o'clock position and off the nose of the miniature airplane. The compass card rotates and presents all quadrants in their true relation to line of flight. A compass light is furnished for night flying. A compass correction card and card holder is attached to the instrument console.

(2) Magnetic Compass (280F)

The magnetic compass indicates the heading of the helicopter in relation to magnetic north. It is a direct indicating compass and indicates the heading by means of a floating card element that is against a fixed reference line. The liquid used in the compass dampens the card oscillation. A compass light is furnished for night flying. A compass correction card and card holder is furnished adjacent to the instrument.

7-15 MAGNETIC COMPASS (Later F-28F and 280FX)

NOTE: Due to improved performance, F-28F S/N 833 and subsequent and 280FX S/N 2167 and subsequent helicopters are equipped from the factory with a SIRS Navigation Aircraft Compass.

A. Description

The compass installation is mounted to the center windshield post and includes the correction card adjacent to the compass. The compass may feature a fluorescent card legend, LED illumination, and silicone card damping. Power for illumination is provided by the PNL LT switch and brightness may be controlled with the DIMMER PANEL LT knob.

Refer to Paragraph 7-18 for removal and installation instructions. Refer to Paragraph 7-19 for inspection requirements. In the event the compass must be replaced, refer to the manufacturer's installation instructions. Vendor information is provided in Table 2-2.

UNCONTROLLED COPY WHEN DOWNLOADED OR PRINTED

Visit www.enstromhelicopter.com for instructions to order an original manual and to register for email notification of updates.

7-16 HOURMETER

A. Description

The hourmeter is located inside the right side engine compartment door. It is mounted just forward of the air filter housing. The meter keeps a running log of the total hours on the aircraft.

7-17 PITOT STATIC SYSTEM

A. Description

To operate the airspeed indicator and altimeter, it is necessary to have a static source of air pressure. A pitot-static system has been installed in the aircraft with two static air pressure ports. One is on the left-hand side of the tail cone just aft of the baggage compartment and the other is on the right-hand side of the tail cone. The static pressure ports are interconnected to a single static pressure line which runs up the right side of the pylon and through the seat structure to a tee fitting in the instrument console. It then runs to the altimeter and to one side of the airspeed indicator. Refer to Figure 7-3.

CAUTION: THE TWO STATIC PORTS SHOULD ALWAYS BE CHECKED PRIOR TO FLIGHT AND ALSO AT ANY TIME THE HELICOPTER IS OPERATED IN DUSTY OR FREEZING CONDITIONS WHERE THE SMALL INLET HOLES MAY BECOME CLOGGED, WHICH WILL CAUSE THE INSTRUMENTS TO BE INOPERATIVE OR INACCURATE.

B. Pitot Tube - Description

The pitot tube is located on the lower forward side of the cabin structure. It is a curved aluminum tube secured with mounting plates to the bottom of the fiberglass cabin wall. A flexible rubber hose is routed through the instrument console connecting the pitot tube to the airspeed indicator instrument line.

CAUTION: The pitot tube inlet end should be covered when the aircraft is to be parked for any prolonged period of time to prevent ingestion of dirt or ice that will impair the operation of the airspeed indicator. Use a red cover so it will be noticeable for removal on preflight inspection.

7-18 REPLACEMENT OF INSTRUMENTS

A. Replacement Procedures

NOTE: The following procedures are typical and apply to all instruments installed in the instrument panel.

(1) Check that all electrical power is off to avoid the possibility of electrical shorts while working in the area of the instrument panel.

(2) Remove covers from instrument console.

(3) Disconnect electrical plug, wiring, or tubing as applicable, from the back of the instrument. Install suitable covers over tube fittings, instrument fittings, and loose wire terminals. Tag all connections for reinstallation.

(4) Remove the screws securing the instrument to face of the panel and remove instrument from instrument panel.

UNCONTROLLED COPY WHEN DOWNLOADED OR PRINTED

Visit www.enstromhelicopter.com for instructions to order an original manual and to register for email notification of updates.

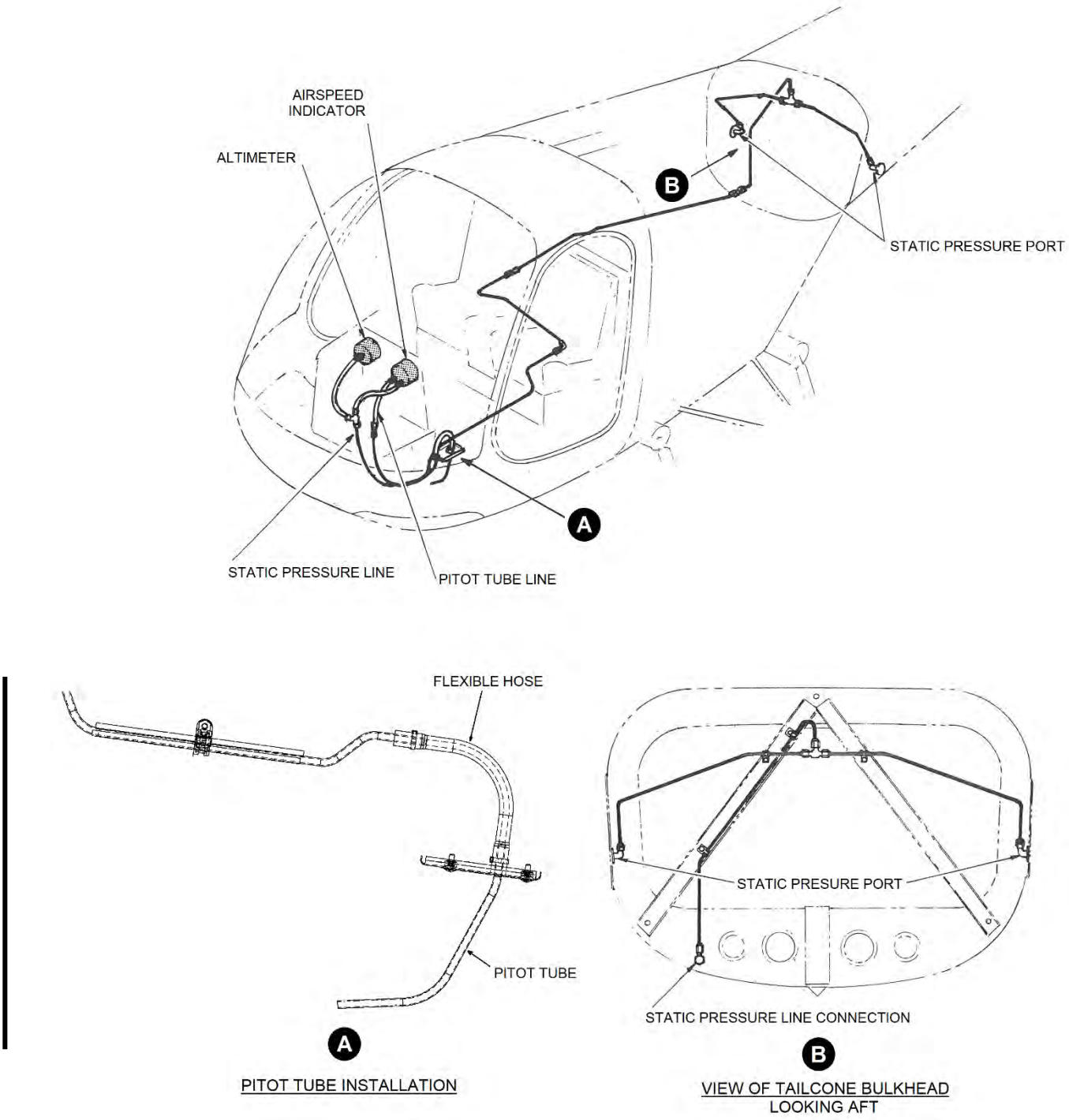

Figure 7-3. Pitot Static System

UNCONTROLLED COPY WHEN DOWNLOADED OR PRINTED

Visit www.enstromhelicopter.com for instructions to order an original manual and to register for email notification of updates.

(5) Place replacement instrument into panel in mounting position and secure with mounting screws.

(6) Connect tubing, electrical plug or wiring as applicable to the back of the instrument. Use care to avoid reversing connections for pitot and static lines.

(7) Reinstall covers on instrument console.

7-19 INSPECTION OF INSTRUMENTS

A. Inspection

(1) Inspect instrument case for dents and cover glass for slippage and cracks.

(2) Inspect fitting or electrical connector at back of instrument for damaged threads that might prevent proper connection of the tube nut or electrical plug.

(3) Inspect index markings and numerals on dial face for discoloration and legibility. Inspect pointers for cracked or peeling fluorescent paint,

(4) Inspect for presence of all required range markings and slippage of any marks, indexes, or scales.

7-20 CALIBRATION OF INSTRUMENTS & INDICATORS

A. General Information

Calibration checks of the instruments are to be performed at qualified instrument calibration facilities.

7-21 ENGINE MONITOR

NOTE: Paragraph 7-21 was previously contained in Section 24.

A. Description

Later F-28F and all 280FX production aircraft are equipped with an engine monitor as an aid or as a replacement for the analog “EGT” indicator used in 280F and early F-28F production aircraft. Figure 7-2.1 depicts the location of the engine monitoring instrument.

NOTE: For early F-28F aircraft equipped with the analog indicator, the term defining the temperature of the exhaust gases delivered into the turbocharger unit was initially designated as exhaust gas temperature (EGT).

For F-28F and 280FX aircraft equipped with an engine monitor, the EGT term is replaced by the designation turbine inlet temperature (TIT). Where currently used, the term EGT is designated as the temperature of exhaust gas of the individual cylinders.

F-28F (S/N 830 and prior) and 280FX (S/N 2139 and prior) are equipped with the Graphic Engine Monitor (GEM) Model 603 or Model 610. F-28F (S/N 831 and 832) and 280FX (S/N 2140 through 2173) are equipped with the Engine Data Management (EDM) Model EDM-700. F-28F (S/N 833 and subsequent) and 280FX (S/N 2174 and subsequent) are equipped with the Graphic Engine Monitor (GEM) Model 610C (G2). GEM Model 610C is installed per STC SH13-45.

UNCONTROLLED COPY WHEN DOWNLOADED OR PRINTED

Visit www.enstromhelicopter.com for instructions to order an original manual and to register for email notification of updates.

NOTE: The EDM-700 system is powered by a panel switch labeled **EDM 700**. The GEM 610C is powered by a panel switch labeled **ENG MON**.

The GEM and EDM models display EGT and cylinder head temperature (CHT) in bar graphs, one for each cylinder. TIT is displayed digitally for both models and is also displayed in bar graph on the EDM model. The GEM 610/C and EDM-700 also display EGT, CHT, and outside air temperature (OAT) digitally. The EDM-700 also monitors and displays rate of change of CHT (CLD), maximum EGT differential (DIF), and voltage (BAT).

NOTE: For Model 603, the TIT is displayed as a three-digit number (equal to the actual TIT in °F divided by 10); for Model 610, TIT is displayed as a four-digit number.

B. Maintenance

The engine monitor instrument requires no scheduled maintenance checks, calibration, field adjustments or field-serviceable components. Built-in self-tests start automatically on power-up to detect instrument malfunctions. Common start-up malfunctions are caused by a wiring anomaly. Refer to Diagram 21-5 Sheet 3 or 6, as applicable, to diagnose an open wire or probe with a poor connection.

Refer to instrument replacement (Para. 7-18) and inspection (Para. 7-19) procedures. In addition, inspect the instrument for proper operation. The inspection for proper engine monitor operation should consist of either a maintenance ground run or a maintenance test flight to compare the instrument indications to the indications observed during normal operation. Refer to the troubleshooting and diagnosis chart, Table 7-2, to help diagnose engine problems. Also, refer to the manufacturer's published installation and operation manuals for specific instrument troubleshooting.

C. CHT Probe Installation – Engine Monitor EDM-700

NOTE: Cylinder #3 CHT probe (P/N AN5546-1), specific to the EDM-700 installation, is a washer-type thermocouple. It is recommended to install a spacer (P/N 28-22096-11) whenever the CHT probe is removed, if not already installed. (This procedure was originally documented in SIL 0185.) Refer to Figure 7-4.

(1) If required, install Cylinder #3 EDM-700 CHT probe spacer as follows:

(a) Remove adaptor (P/N AN4076-1) from Cylinder #3.

(b) Remove gasket ring (of P/N MM-113-3/8) from end of adaptor.

(c) Inspect gasket ring for damage and replace P/N MM-113-3/8, if necessary.

(d) Install gasket ring (of P/N MM-113-3/8) over threaded end of adaptor.

(e) Install spacer (P/N 28-22096-11) over gasket ring over threaded end of adaptor.

(f) Reinstall adaptor (P/N AN4046-1) in Cylinder #3. (Hand tighten adaptor and snug an additional 1/16-1/8 turn.)

(g) Reconnect EDM 700 CHT probe in adaptor.

UNCONTROLLED COPY WHEN DOWNLOADED OR PRINTED

Visit www.enstromhelicopter.com for instructions to order an original manual and to register for email notification of updates.

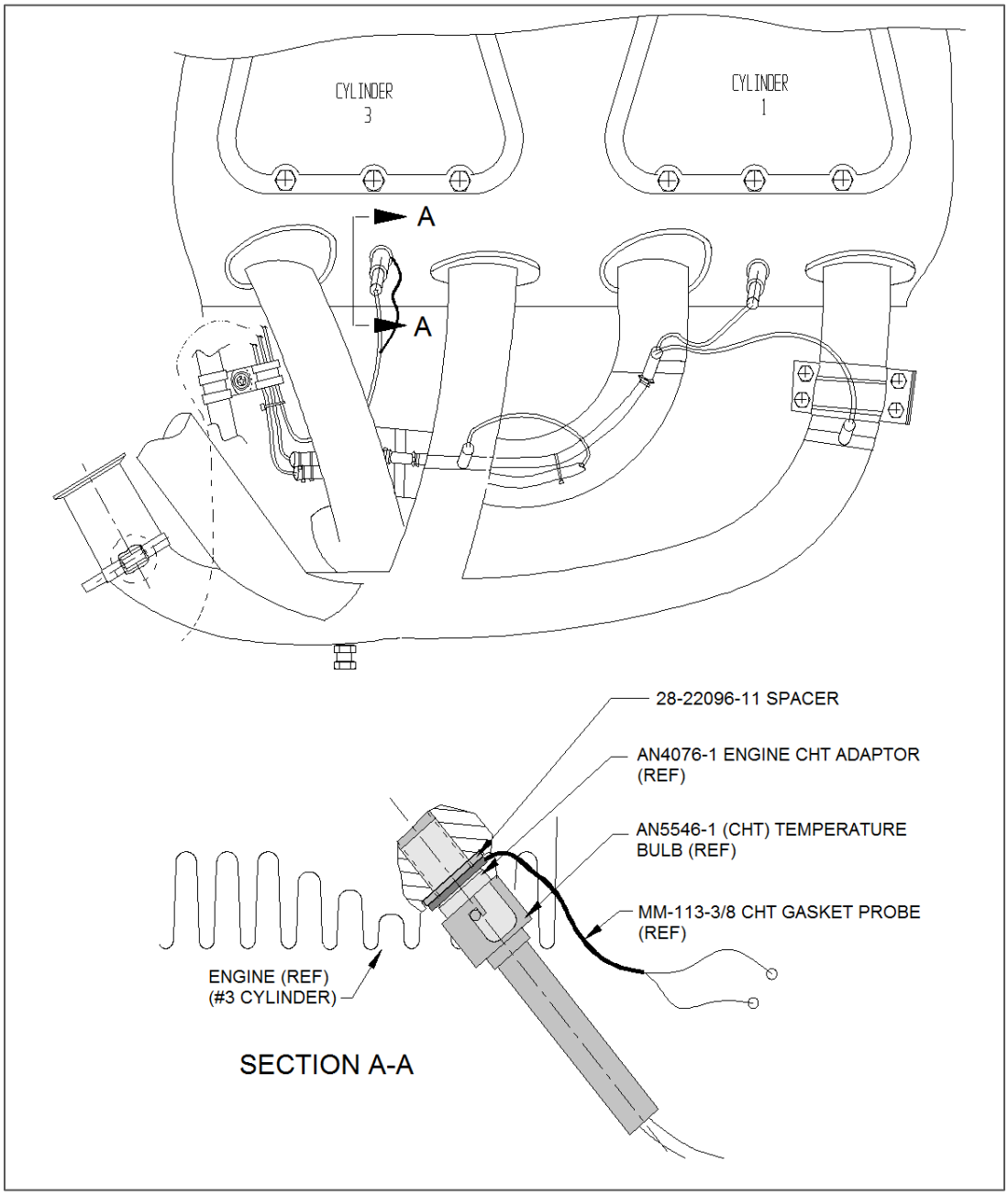

Figure 7-4. Cylinder #3 EDM-700 CHT Probe Installation

UNCONTROLLED COPY WHEN DOWNLOADED OR PRINTED

Visit www.enstromhelicopter.com for instructions to order an original manual and to register for email notification of updates.

D. Programming Alarm Limits – Engine Monitor EDM-700

The EDM-700 has programmable alarms. The alarm limits are based on factory default settings but may be modified. Recommended alarm limit values are defined in Table 7-1. The operator may choose to reduce these to provide additional margins or increase engine life. Lycoming and various industry groups have additional guidance.

NOTE: Limits will reset to factory defaults when the display is switched between Fahrenheit and Celsius.

Table 7-1. EDM-700 Recommended Alarm Limit Values

Parameter	Description	Recommended Limit
CHT	Cylinder head temperature	500°F (260°C)
TIT	Turbine inlet temperature	1650°F (900°C)
CLD	Cylinder head cooling rate	-100°F/min (-55°C/min)
DIF	Difference between highest and lowest EGT values	500°F (280°C)
H BAT	Battery high voltage limit	30.0V
L BAT	Battery low voltage limit	24.5V

E. Troubleshooting

Refer to Table 7-2 to help diagnose engine problems when using the engine monitor. Not all possible engine display problems are presented. Refer to the applicable engine monitor installation and/or operation manual for a complete troubleshooting and diagnosis listing.

WARNING: MAGNETO CHECKS SHOULD BE CONDUCTED ON THE GROUND. THEY MAY BE CONDUCTED HOVERING IGE WITH A PILOT AND A MECHANIC TO MANIPULATE THE MAGNETO SWITCH, BUT THE PILOT MUST BE PREPARED FOR SUDDEN, COMPLETE ENGINE STOPPAGE.

UNCONTROLLED COPY WHEN DOWNLOADED OR PRINTED

Visit www.enstromhelicopter.com for instructions to order an original manual and to register for email notification of updates.

Table 7-2. Graphic Engine Monitor Troubleshooting

Problem	Cause	Required Action
Gradual or sudden increase in EGT of one cylinder. **NOTE** GEM 603/610 display will blink when this occurs.	Partially plugged fuel nozzle, indicated by no variation in EGT during magneto check for that cylinder.	Remove and clean indicated cylinder nozzle.
	Fouled or defective spark plug or ignition lead. Failing EGT probe.	Perform a magneto check on the ground. Cylinder that has a faulty spark plug or ignition lead will drop on the bar graph and other cylinders will rise, indicating the top, bottom plug or lead, with the problem.
		Replace spark plug or lead as required on indicated cylinder.
		Replace EGT probe.
Rising EGT readings on all cylinders. **NOTE** GEM 603/610 display will blink when this occurs.	**WARNING** **This is a serious indication and can cause abrupt engine failure, if proper steps are not taken.**	
	Magneto out of time, or faulty.	Perform a magneto check on the ground. RPM drop on both magnetos should be excessive.
		Check timing. If correct, overhaul or replace magnetos.
	Restriction in fuel system or servo not flowing correctly.	Check fuel filters and clean.
		Perform fuel flow check at nozzles.
		Check lines for damage or flex lines for twist.
		Return servo to authorized Bendix overhaul center.
Above normal temperatures in one or more cylinders (CHT).	Cracked, missing or open baffles or doors. Obstruction or debris in cylinder fins. Cowl panel doors not secure.	Repair or replace baffles, remove obstructions, and close panel doors.

UNCONTROLLED COPY WHEN DOWNLOADED OR PRINTED

Visit www.enstromhelicopter.com for instructions to order an original manual and to register for email notification of updates.

Problem	Cause	Required Action
Low EGT reading in one cylinder, continually.	Defective or blown exhaust gasket. Cracked or loose exhaust system.	Inspect exhaust system and correct as required.
	Intake valve not opening completely causing low compression.	Perform a compression check.
	Plugged fuel nozzle.	Clean nozzle.
Decline in EGT uniformity, most visible at cruise power settings.	Fuel system restriction or dirty injection nozzles.	Clean fuel nozzles. Do flow check for uniformity, and if problem persists check fuel system for proper pressure and flow.
Magneto Check: EGT is often a better indicator of ignition problems that have been traditionally diagnosed by observing rpm drop during run-up. If one spark plug or ignition wire on each mag is defective the single mag check would indicate an equal rpm drop on each. Such a double failure would go undetected. The engine monitor will not only identify the problem but pinpoint the affected cylinder.		
Mixture check: The engine monitor displays a uniform EGT rise of all cylinders during mixture control check. An abnormally large exhaust gas temperature differential in one or more cylinders in fuel injected engines may warn of a fuel injector constriction.		

UNCONTROLLED COPY WHEN DOWNLOADED OR PRINTED

Visit www.enstromhelicopter.com for instructions to order an original manual and to register for email notification of updates.

NOTE: Paragraph 7-22 through 7-24 were previously contained in Section 24.

7-22 CLOCK

A digital clock, if equipped, may be installed in the switch and circuit breaker panel or the instrument panel (F-28F S/N 833 and subsequent; 280FX S/N 2167 and subsequent). The clock is powered by an internal alkaline battery which should be replaced every 12 months.

Refer to Paragraph 7-18 for removal and installation instructions.

Refer to the vendor's published literature for clock specifications and operation (see Table 2-2).

7-23 OUTSIDE AIR TEMPERATURE INDICATOR (OAT)

OAT indication is shown by the numeric display on the engine monitoring system (GEM or EDM). The interior, top cabin mounted outside air temperature indicator was discontinued for F-28F S/N 832 and subsequent and 280FX S/N 2147 and subsequent.

Refer to the vendor's published manuals for OAT display (see Table 2-2).

7-24 ROTOR RPM MAGNETIC PICK-UP

NOTE: This procedure for installing the magnetic pick-up must be followed to avoid serious damage to the main rotor transmission gears.

NOTE: Refer to Figure 7-5 for installation detail.

A. Removal

(1) Remove the left side fuel tank (Para. 13-10).

(2) Place ground handling wheels in the down position.

(3) Place 2 blocks (approximately 1.5 inches/3.8 mm) under the forward strut attachment points under the skid tube.

(4) Place the wheels in the up position. This will allow the oil in the gearbox to run aft and not leak out when the access plug is removed.

(5) Disconnect the magnetic pick-up electrical connector.

(6) Remove the magnetic pick-up from the main rotor transmission. If replacing the magnetic pick-up, remove any shims installed on the pick-up.

B. Inspection

(1) Inspect the magnetic pick-up for security of installation and condition and security the electrical wires and connectors.

(2) Using a multi-meter, check for 270-330 ohms across the leads.

UNCONTROLLED COPY WHEN DOWNLOADED OR PRINTED

Visit www.enstromhelicopter.com for instructions to order an original manual and to register for email notification of updates.

C. Repair

(1) Repair damaged wiring or electrical connectors.

(2) Replace the magnetic pick-up if the ohm check is outside the 270-330 ohm range or if inspection of the system components and wiring isolates the problem to the magnetic pick-up.

D. Installation

(1) Remove the magnetic pick-up inspection plug on the forward, lower section of the main rotor gearbox.

(2) Turn the gearbox until a gear tooth is directly under the center of the magnetic pick-up installation hole.

(3) Install the magnetic pick-up into the main rotor transmission.

(a) Insert a 0.030 feeler gauge through the access plug hole.

(b) Install any shims, P/N 28-16524-( ), from the old pick-up onto the replacement magnetic pick-up between the check nut and the top base of the magnetic pick-up.

(c) Replace the O-ring on the magnetic pick-up.

(d) Screw the magnetic pick-up in until it touches the feeler gauge.

(e) Adjust the amount of shims (0.002-0.500 in max.) as required to set the final clearance between the magnetic tip of the pick-up and the gear tooth to .030-.045 inch/.76-1.14 mm.

(f) Torque the magnetic pick-up to 60-65 in-lb/6.8-7.3 Nm.

(4) Install the inspection plug.

(a) Replace the O-ring on the plug and reinstall the plug in the front of the transmission.

(b) Torque the plug and lockwire (.032) the magnetic pick-up to the plug.

(5) Reconnect the electrical connector.

(6) If required, service the main rotor transmission (Para. 4-12).

(7) Install the left side fuel tank (Para. 13-10).

UNCONTROLLED COPY WHEN DOWNLOADED OR PRINTED

Visit www.enstromhelicopter.com for instructions to order an original manual and to register for email notification of updates.

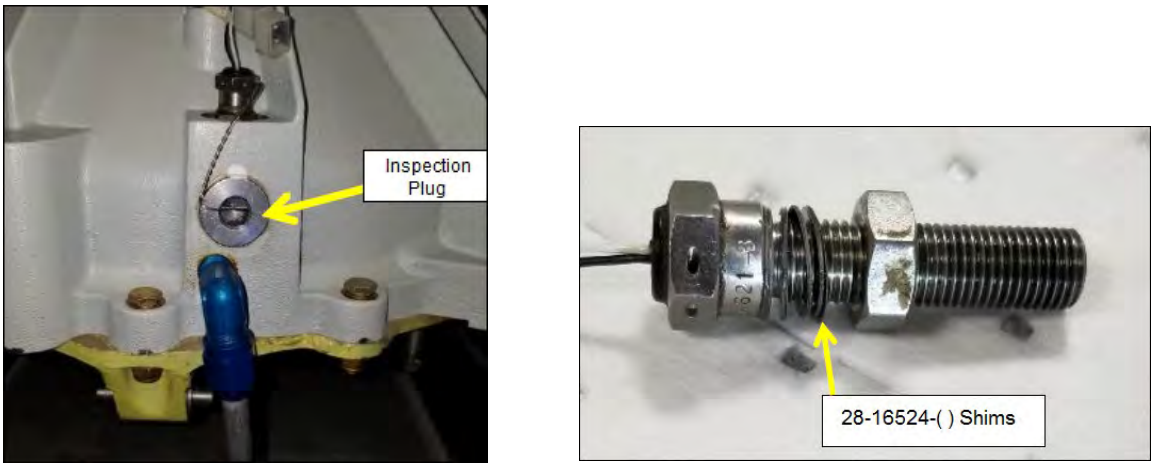

Left: Inspection Plug; *Right:* Magnetic Pick-up

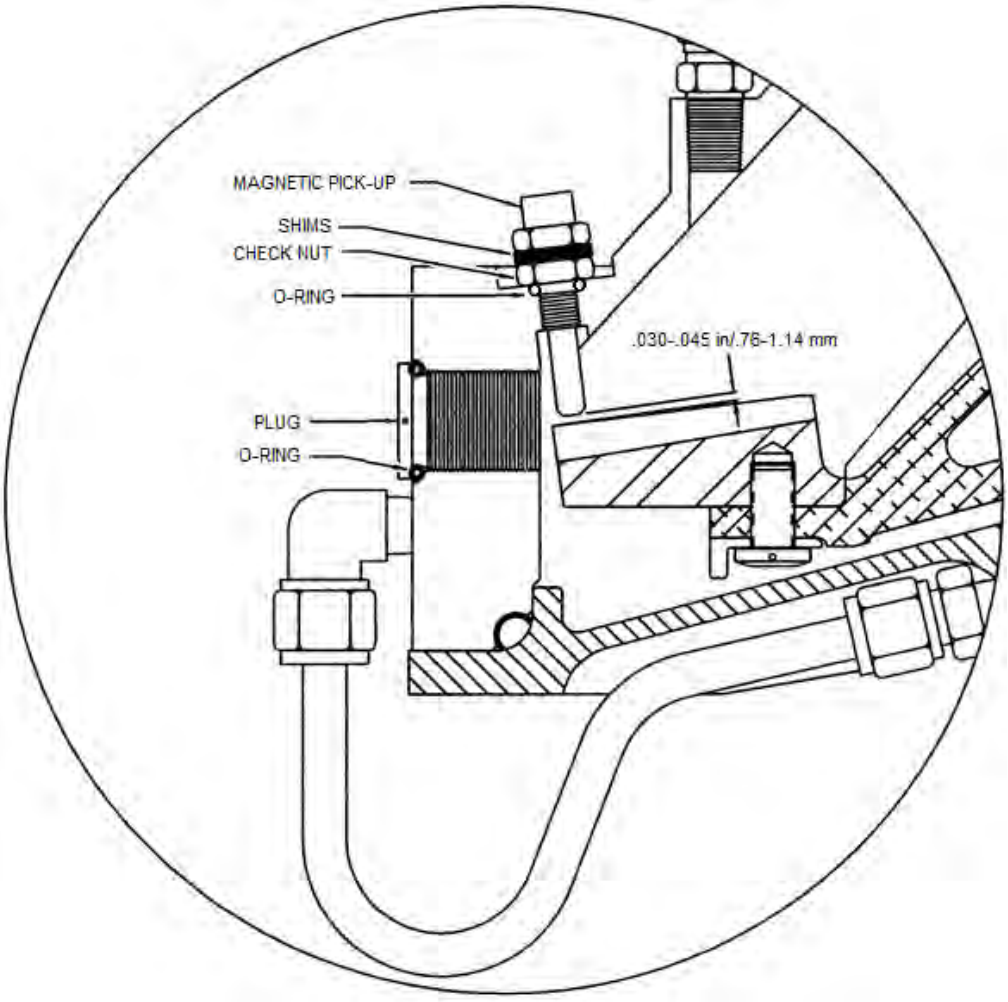

Figure 7-5. Magnetic Pick-up Installation

Visit www.enstromhelicopter.com for instructions to order an original manual and to register for email notification of updates.

INTENTIONALLY LEFT BLANK

UNCONTROLLED COPY WHEN DOWNLOADED OR PRINTED

Visit www.enstromhelicopter.com for instructions to order an original manual and to register for email notification of updates.

SECTION 8

STRUCTURE

TABLE OF CONTENTS

Paragraph Page

8-1 Cabin MM-8-5
A. Removal MM-8-5
B. Inspection MM-8-6
C. Repair MM-8-6
D. Installation MM-8-6

8-2 Windshields and Windows MM-8-8
A. Inspection MM-8-8
B. Repair MM-8-8
C. Removal, F-28F Windshield MM-8-8
D. Installation, F-28F Windshield MM-8-10
E. Removal, 280F Series Windshield MM-8-12
F. Installation, 280F Series Windshield MM-8-12
G. Removal, Overhead and Lower Windows (All F-28F and 280F/FX) MM-8-14
H. Installation, Overhead and Lower Windows (All F-28F and 280F/FX) MM-8-15

8-3 [Original content incorporated into Paragraph 8-2]

8-4 Cabin Doors MM-8-16

F-28F Cabin Door
A. Removal MM-8-16
B. Inspection MM-8-16
C. Repair MM-8-16
D. Installation MM-8-16
E. Removal – F-28F Cabin Door Glass MM-8-19
F. Installation – F-28F Cabin Door Glass MM-8-19

280F Series Cabin Door
G. Removal – 280F Series Cabin Door (S/N 2166 and Prior) MM-8-20
G.1 Removal – 280F Series Cabin Door (S/N 2167 and Subsequent) MM-8-20
G.2 Disassembly MM-8-24
G.3 Assembly MM-8-24
H. Inspection MM-8-24
I. Repair MM-8-25
J. Installation – 280F Series Cabin Door (S/N 2166 and Prior) MM-8-25
J.1 Installation – 280F Series Cabin Door (S/N 2167 and Subsequent) MM-8-25
K. Installation – 280F Series Door Glass MM-8-25

8-5 [Original content incorporated into Paragraph 8-4]

8-6 [Original content incorporated into Paragraph 8-2]

8-7 Seat Belts – Shoulder and Lap Type MM-8-25
A. Removal – Lap Belt MM-8-25
B. Removal – Shoulder Harness MM-8-25
B.1 Lap Belt Inspection MM-8-26
C. Installation – Lap Belt MM-8-26
D. Installation – Shoulder Harness MM-8-27

UNCONTROLLED COPY WHEN DOWNLOADED OR PRINTED

Visit www.enstromhelicopter.com for instructions to order an original manual and to register for email notification of updates.

SECTION 8

STRUCTURE

TABLE OF CONTENTS – CONTINUED (PAGE MM-8-2)

Paragraph		Page
8-8	**Seat Deck Assembly**	**MM-8-29**
	A. Removal	MM-8-29
	B. Inspection	MM-8-29
	C. Repair	MM-8-29
	D. Installation	MM-8-29
8-9	**Landing Gear**	**MM-8-30**
	A. Landing Gear Assembly	MM-8-30
	B. Skid Shoes	MM-8-35
	C. Ground Handling Wheels	MM-8-35
	D. Oleo Struts	MM-8-39
	E. Landing Gear Fairings (280FX)	MM-8-49
8-10	**Pylon**	**MM-8-51**
	A. Removal and Installation	MM-8-51
	B. Inspection	MM-8-51
	C. Repair	MM-8-51
8-11	**Baggage Compartment**	**MM-8-51**
	A. Removal	MM-8-51
	B. Inspection	MM-8-53
	C. Repair	MM-8-53
	D. Installation	MM-8-53
8-12	**Tailcone Assembly**	**MM-8-54**
	A. Removal	MM-8-54
	B. Inspection	MM-8-54
	C. Repair	MM-8-54
	D. Installation	MM-8-54
8-12.1	**Tubular Tail Rotor Guard (F-28F Post-1986; 280FX)**	**MM-8-56**
	A. Removal	MM-8-56
	B. Inspection	MM-8-56
	C. Installation	MM-8-57
8-12.2	**Tail Rotor Driveshaft Cover (280FX)**	**MM-8-57**
	A. Cover Opening – Tail Rotor Driveshaft Access	MM-8-57
	B. Inspection	MM-8-57
	C. Cover Closing	MM-8-57
8-13	**Extension Tube**	**MM-8-57**
	A. Removal	MM-8-57
	B. Inspection	MM-8-58
	C. Repair	MM-8-58
	D. Installation	MM-8-60
8-14	**Horizontal Stabilizers (F-28F Pre-1986)**	**MM-8-60**
	A. Removal	MM-8-60
	B. Inspection	MM-8-61
	C. Installation	MM-8-63

UNCONTROLLED COPY WHEN DOWNLOADED OR PRINTED

Visit www.enstromhelicopter.com for instructions to order an original manual and to register for email notification of updates.

SECTION 8

STRUCTURE

TABLE OF CONTENTS – CONTINUED (PAGE MM-8-3)

Paragraph		Page
8-15	**Horizontal Stabilizers (280F)**	**MM-8-63**
	A. Removal	MM-8-63
	B. Inspection	MM-8-63
	C. Installation	MM-8-64
8-16	**Horizontal and Vertical Stabilizers (F-28F Post-1986; 280FX)**	**MM-8-64**
	A. Removal	MM-8-64
	B. Inspection	MM-8-64
	C. Installation	MM-8-65
	D. Assembly – Endplate	MM-8-65
8-17	**Airscoop (280FX)**	**MM-8-72**
	A. Removal – Access (Upper Drive System/Main Rotor Gearbox Removal)	MM-8-72
	B. Installation	MM-8-72
8-18	**Cabin Closeout Panels (280FX)**	**MM-8-74**
	A. Removal – Left Side Closeout Panel	MM-8-74
	B. Installation – Left Side Closeout Panel	MM-8-74
	C. Removal and Installation – Right Side Closeout Panel	MM-8-74

UNCONTROLLED COPY WHEN DOWNLOADED OR PRINTED

Visit www.enstromhelicopter.com for instructions to order an original manual and to register for email notification of updates.

INTENTIONALLY LEFT BLANK

UNCONTROLLED COPY WHEN DOWNLOADED OR PRINTED

Visit www.enstromhelicopter.com for instructions to order an original manual and to register for email notification of updates.

SECTION 8

STRUCTURE

NOTE

Section 22 content – supplemental maintenance procedures for models F-28F Post-1986 (S/N 744 and subsequent) and 280FX, has been incorporated into Section 8. Model or S/N effectivity is noted where applicable.

8-1 CABIN

The cabin assembly is constructed of an aluminum sheet metal seat structure which supports an outer cabin shell of reinforced fiberglass. The entire cabin section can be removed from the pylon as a unit.

A. Cabin Removal

(1) Remove cabin doors and fiberglass seat deck.

(2) Remove cowling and disconnect and remove engine compartment door hinge bracket from cabin.

(3) Disconnect and remove air filter housing.

(4) Disconnect collective push rod from collective walking beam at the cabin firewall.

(5) Disconnect lateral and longitudinal cyclic push-pull rods at bellcranks on each side of the cabin wall.

(6) Disconnect main battery cable inside engine compartment.

(7) Drain fuel from both fuel tanks and remove tanks.

NOTE: Install plugs in fuel line fittings.

(8) Disconnect tail rotor control cables at turnbuckle in engine compartment or under baggage box, as applicable. See Paragraph 10-8.

(9) Disconnect all oil lines, fuel lines, and airspeed static tube at the firewall.

(10) Disconnect electrical wiring:

(a) Engine system components

(b) Flight system components

(c) Avionic connections (i.e., antenna leads)

(11) Disconnect clutch control cable at turnbuckle in seat structure and at forward clutch cable mount on side of firewall. See Paragraph 11-2.

(12) Disconnect engine and rotor tachometer cables.

UNCONTROLLED COPY WHEN DOWNLOADED OR PRINTED

Visit www.enstromhelicopter.com for instructions to order an original manual and to register for email notification of updates.

(13) Disconnect throttle control cable from injector and pylon mount.

(14) Disconnect mixture control cable from injector and pylon mount.

(15) Remove screws connecting fire curtain to firewall.

NOTE: Sealastic bead will peel from firewall to remove.

(16) Disconnect fuel shut-off control.

(17) Disconnect shoulder harness cables on aft side of cabin back wall. Disconnect the seat belt cables from the keel attachment locations.

(18) Disconnect flex hose and control cable from cabin heat duct on aft side of firewall.

(19) Support cabin and remove six cabin attachment bolts (1, 2). See Figure 8-1 for bolt locations. Lift cabin free of aircraft.

B. Cabin Inspection

(1) Inspect cabin shell for obvious damage, cracks, and condition and security of hardware securing cabin shell to the cockpit bulkhead and cockpit floor.

(2) Inspect cockpit bulkhead and cockpit floor for obvious damage, loose inserts, and condition and security of hardware securing bulkhead to the pylon and cockpit floor to the keel structure.

C. Cabin Repair

(1) Replace damaged or missing hardware.

(2) Repair damage to cabin shell, cockpit bulkhead, or cockpit floor I/A/W AC 43.13-1B. Contact Enstrom Helicopter Corporation Customer Service for detailed damage and repair limitations.

D. Cabin Installation

(1) Lift cabin and align with pylon mounts. Install six attachment bolts. Torque 1/4” bolts (1) to 40-50 in-lb/4.5-5.7 Nm. Torque 5/16” bolts (2) to 80-90 in-lb/9-10.2 Nm. See Figure 8-1.

NOTE: Throttle, mixture, and clutch cables must be lined up and guided through the firewall.

NOTE: Safety wire the two outboard lower cabin mounts after torque.

(2) Connect flex hose and cabin heat control cable to duct on the aft side of firewall.

(3) Connect shoulder harness cables on aft side of the cabin.

(4) Connect fuel shut-off control cable.

(5) Secure fire curtain to firewall using screws and fire barrier sealant CP 25WB+ (3M) or equivalent.

UNCONTROLLED COPY WHEN DOWNLOADED OR PRINTED

Visit www.enstromhelicopter.com for instructions to order an original manual and to register for email notification of updates.

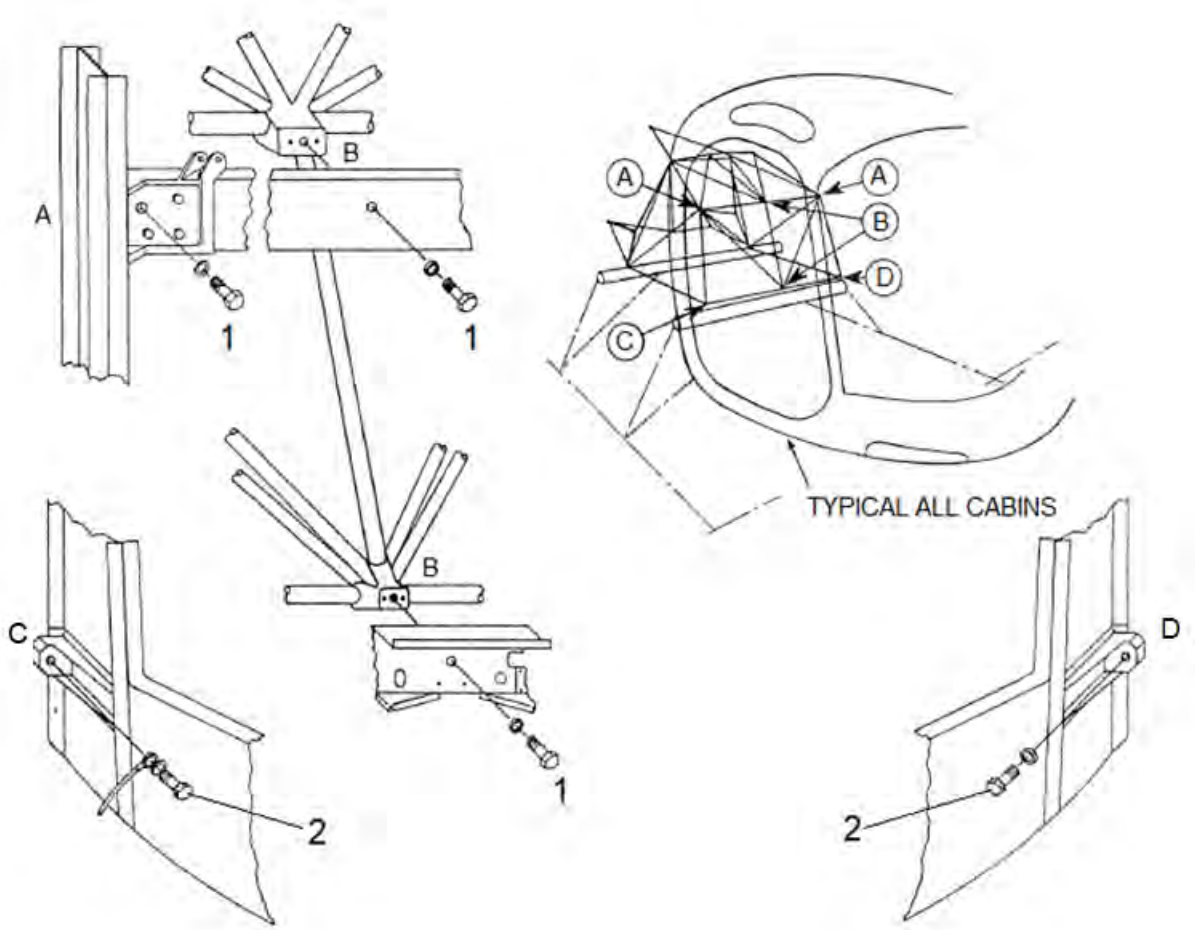

NOTE: Some installations may be shimmed at point (B) bottom.

1. Bolt (1/4 in)
2. Bolt (5/16 in)

Figure 8-1. Cabin Assembly Installation

UNCONTROLLED COPY WHEN DOWNLOADED OR PRINTED

Visit www.enstromhelicopter.com for instructions to order an original manual and to register for email notification of updates.

(6) Connect mixture control cable and throttle control cable to pylon mounts and injector. See Paragraph 13-12 for proper rigging of the injector and correlator.

(7) Connect clutch cable at forward pylon mount and at turnbuckle in seat structure. Do a complete clutch cable rigging procedure. See Paragraph 11-1.

(8) Connect all electrical wiring in engine compartment.

(9) Connect all oil lines, fuel lines, and air speed static tube at firewall.

(10) Connect engine and rotor tachometer cables.

(11) Connect tail rotor cables at turnbuckle in engine compartment. Adjust cable tension per Paragraph 10-7, A. Check tail rotor rigging per Paragraph 10-8, B.

(12) Install engine compartment door hinge bracket between cabin and bulkhead.

(13) Install fuel tanks and connect all fuel lines. Check for leaks after fuel servicing.

(14) Connect the main battery cable inside engine compartment.

(15) Connect the lateral and longitudinal cyclic push-pull rods to bellcranks on each side of cabin wall.

(16) Connect collective push rod to collective walking beam at cabin backwall.

(17) Install air filter housing and connections.

(18) Check all flight controls for proper operation. Check all items on the Daily Check List and complete a Preflight Inspection. See Paragraph 4-48.

(19) Install cowling and engine compartment doors.

(20) Install fiberglass seat deck and cabin doors.

8-2 WINDSHIELDS AND WINDOWS

A. Windshield and Window Inspection

(1) Inspect windshields and windows for cracks, crazing, pits, and scratches.

B. Windshield and Window Repair

(1) Damage to the windshields and windows which does not interfere with pilot's line of sight during normal flight and landing attitudes or damage that does not impair structural integrity may be repaired by stop drilling or patching I/A/W AC 43.13-1B; however, the windshield or window should be replaced at the earliest opportunity.

C. Windshield Removal (F-28F) (See Figure 8-2)

(1) Remove doors.

(2) Remove door hinges to provide clearance for windshield installation.

NOTE: Hinge locations must be marked on hinges for proper reinstallation. Hinges will not align for proper fit if positions are altered.

UNCONTROLLED COPY WHEN DOWNLOADED OR PRINTED

Visit www.enstromhelicopter.com for instructions to order an original manual and to register for email notification of updates.

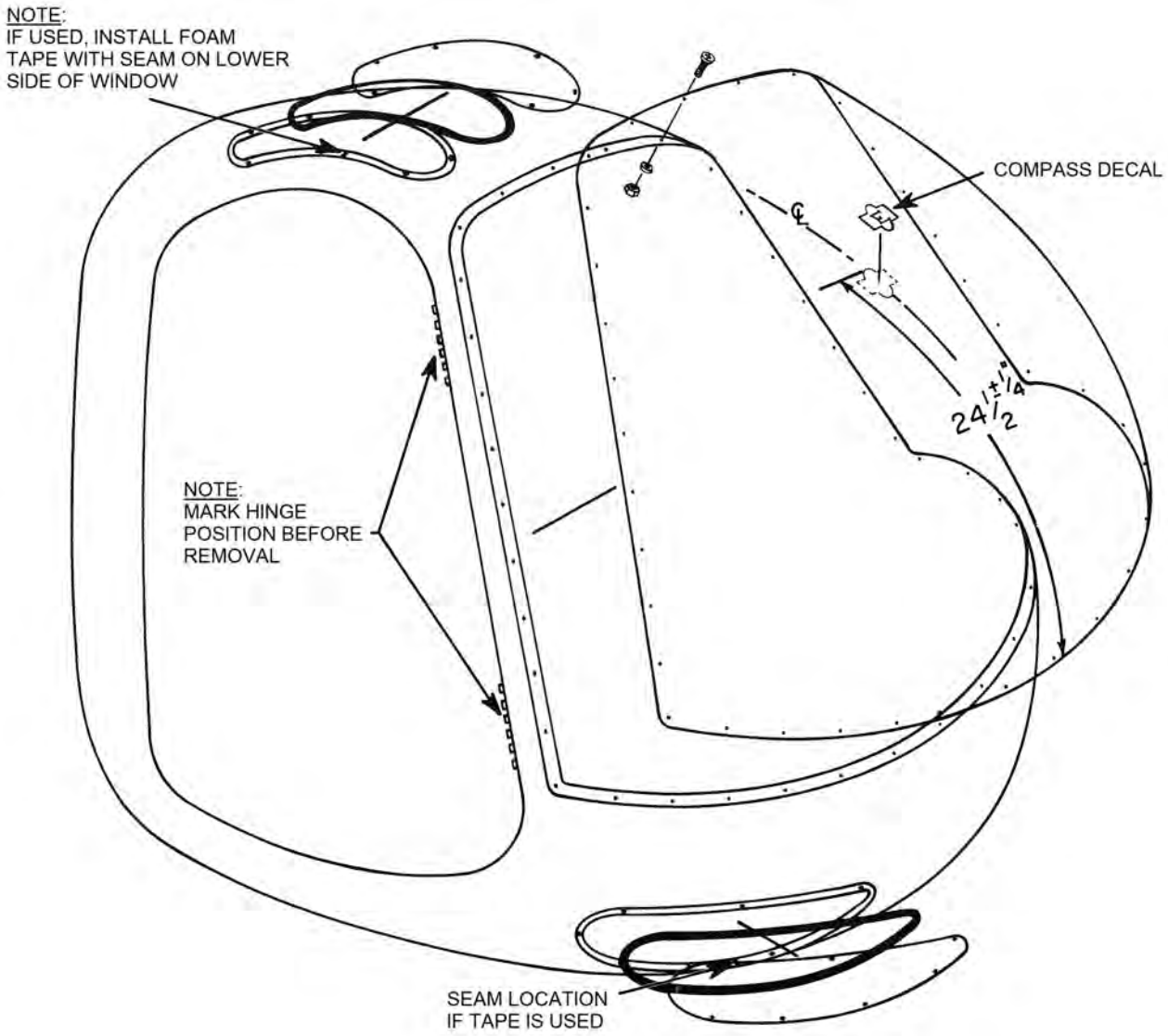

Figure 8-2. F-28F Windshield and Window Installation

Visit www.enstromhelicopter.com for instructions to order an original manual and to register for email notification of updates.

(3) Remove attachment screws around outer edge of windshield.

(4) Remove compass from windshield.

(5) Cut out and remove center portion of windshield.

NOTE: When cutting center portion, stay approximately 2-3 inches away from cabin frame. Apply two layers of masking tape to cabin adjacent to windshield edge to protect paint.

(6) Heat remaining edge of glass and bonding adhesive using a portable heat gun and peel glass from cabin frame.

NOTE: When bonding adhesive is warm, it can be scraped from the edge of the cabin using a suitable size putty knife.

(7) Sand windshield mount area clean and free of old bonding adhesive with fine sandpaper.

D. Windshield Installation (F-28F) (See Figure 8-2)

(1) Clean recessed windshield area of cabin frame with acetone or equivalent.

NOTE: Be sure this area has been sanded smooth and free of old bonding adhesive before wiping with acetone.

(2) Position new windshield over cabin and apply tape to temporarily hold windshield in place.

(3) Apply 1/4 inch wide masking tape following contour of windshield and recessed area of cabin to mark windshield size for cutting.

(4) Remove windshield and cut around the tape line using an oscillating saw or a die grinder with a 1/16 inch cut-off wheel. Leave approximately an extra inch on the outside of the perimeter.

CAUTION: SUPPORT THE TAIL OF THE ACRYLIC WHILE CUTTING TO PREVENT THE TAIL FROM BREAKING OFF AND CRACKING THE ACRYLIC.

(5) Place the window back over the opening and secure with tape. Mark the edge of the finished window perimeter with tape or a fine marker.

NOTE: Ensure approximately a 1/8 inch gap between the edge of the window and the edge of the cabin contour.

(6) Carefully cut the window to size, using the cut-off tools, bench belt sander, or sandpaper on a block. Sand and round the edges to a smooth finish.

NOTE: Check fit to cabin and re-sand as required.

(7) Install windshield and tape it in place. Use a small pilot drill bit to mark the position of the holes in the cabin structure. Do not drill the holes all the way through the acrylic at this time.

UNCONTROLLED COPY WHEN DOWNLOADED OR PRINTED

Visit www.enstromhelicopter.com for instructions to order an original manual and to register for email notification of updates.

(8) Remove the window from the cabin and place it on a padded table or similar work surface.

(9) Drill the holes for the fasteners. Use a drill bit size that will be approximately 1/8 inch larger than the diameter of the attaching screw or rivet.

CAUTION: DRILLING ACRYLICS IS BEST ACCOMPLISHED USING A DRILL MANUFACTURED OR MODIFIED FOR DRILLING ACRYLICS. USE CARE WHEN DRILLING TO PREVENT CRACKING GLASS.

NOTE: Most cracks caused by drilling occur when the drill bit breaks through the backside of the acrylic. Use a small block of wood to support the back side of the window when drilling the holes through the acrylic. If the block is held tight to the window, the acrylic will not crack.

(10) Use a 9/32 inch (7.14 mm) drill bit to open the hole to finished dimensions.

(11) Smooth (chamfer) the top and bottom edges of the holes with a rotary grindstone.

(12) Drill approximately six or eight holes on upper and lower edge of windshield with a #41 drill for mechanical fasteners (Clecos).

(13) Remove windshield. Clean fiberglass recess of cabin with acetone. Lightly sand bonding edge of windshield and clean with acetone.

(14) Apply bonding sealant PR-1425 B-2 (or equivalent) to recess in cabin frame using a putty knife. Spread adhesive approximately 1/8 inch to 3/16 inch thick.

NOTE: Follow the exact mixing requirements of two-part adhesives and sealants.

(15) Install windshield in position and press firmly against adhesive.

(16) Temporarily install mechanical fasteners (Clecos) to hold windshield in position until PR1425 B-2 (or equivalent) adhesive is set up.

CAUTION: ALLOW ADHESIVE TO DRY APPROXIMATELY 24 HOURS BEFORE INSTALLING ATTACHMENT SCREWS TO PREVENT CRACKING THE GLASS.

(17) Run a #19 drill through screw holes to remove bonding adhesive and install screws into holes. Secure with washers and nuts.

CAUTION: DO NOT OVERTORQUE ATTACHMENT SCREWS ON INSTALLATION.

(18) Remove mechanical fasteners.

(19) Install door hinges in position as previously marked in removal procedure.

(20) Install compass to windshield as follows: (see Figure 8-2)

(a) Install compass to windshield from middle rib of lower door hinges and mark centerline of windshield with a grease pencil.

NOTE: Use cloth type measurement tape, if possible, to prevent scratching plexiglass.

UNCONTROLLED COPY WHEN DOWNLOADED OR PRINTED

Visit www.enstromhelicopter.com for instructions to order an original manual and to register for email notification of updates.

(b) Measure up 24-1/2 inch ± 1/4 inch from the bottom edge of windshield and mark a line.

(c) Clean contact surface of windshield with acetone.

(d) Apply double back tape (Scotch Brand 4262 Neoprene, or equivalent) to contact area of compass.

NOTE: Tape is not to extend beyond contact surfaces.

(e) Align top edge of compass to line marked on windshield and press firmly into position. While holding compass on inside, have another person rub windshield from the outside to remove air bubbles.

(f) Apply compass decal over contact surface on outside of windshield.

(21) Prepare windshield edges for paint. Repaint outer mount edge.

(22) Install doors (Para. 8-4).

E. Windshield Removal (280F Series) (See Figure 8-3)

NOTE: The 280F windshield consists of two pieces of plexiglass. Windshield halves can be replaced individually.

(1) Drill out rivets holding center strip in position and remove strip.

(2) Drill out remaining rivets around outer edge of windshield.

(3) Cut out and remove center portion of windshield.

NOTE: When cutting center portion, stay approximately 2-3 inches away from cabin frame.

(4) Heat the remaining edge of glass and bonding adhesive using a portable heat gun and peel glass from cabin frame.

NOTE: When bonding adhesive is warm it can be scraped from edge of cabin using a suitable size putty knife.

(5) Sand windshield mount area clean and free of old bonding adhesive with fine sandpaper.

(6) Remove foam tape from center support brace.

F. Windshield Installation (280F Series) (See Figure 8-3)

(1) Clean recessed windshield area of cabin frame with acetone or equivalent.

(2) Position new windshield over cabin and apply tape to temporarily hold windshield in place.

NOTE: Use care in aligning windshield to recess in cabin as the plexiglass is formed with a slight indentation along outer edge that must be matched to cabin frame.

(3) Apply 1/4 inch wide masking tape following contour of windshield and recessed area of cabin to mark windshield size for cutting.

UNCONTROLLED COPY WHEN DOWNLOADED OR PRINTED

Visit www.enstromhelicopter.com for instructions to order an original manual and to register for email notification of updates.

(4) Remove windshield and cut around the tape line using an oscillating saw or a die grinder with a 1/16 inch cut-off wheel.

CAUTION: SUPPORT THE TAIL OF THE ACRYLIC WHILE CUTTING TO PREVENT THE TAIL FROM BREAKING OFF AND CRACKING THE ACRYLIC.

(5) Place the window back over the opening and secure with tape. Mark the edge of the finished window perimeter with tape or a fine marker.

NOTE: Ensure approximately a 1/8 inch gap between the edge of the window and the edge of the cabin contour.

(6) Carefully cut the window to size, using the cut-off tools, bench belt sander, or sandpaper on a block. Sand and round the edges to a smooth finish.

NOTE: Check fit to cabin and re-sand as required.

(7) Install windshield and tape in place. Match drill to old rivet holes in cabin using a #30 drill or drill new holes through windshield and cabin at midpoints between old holes.

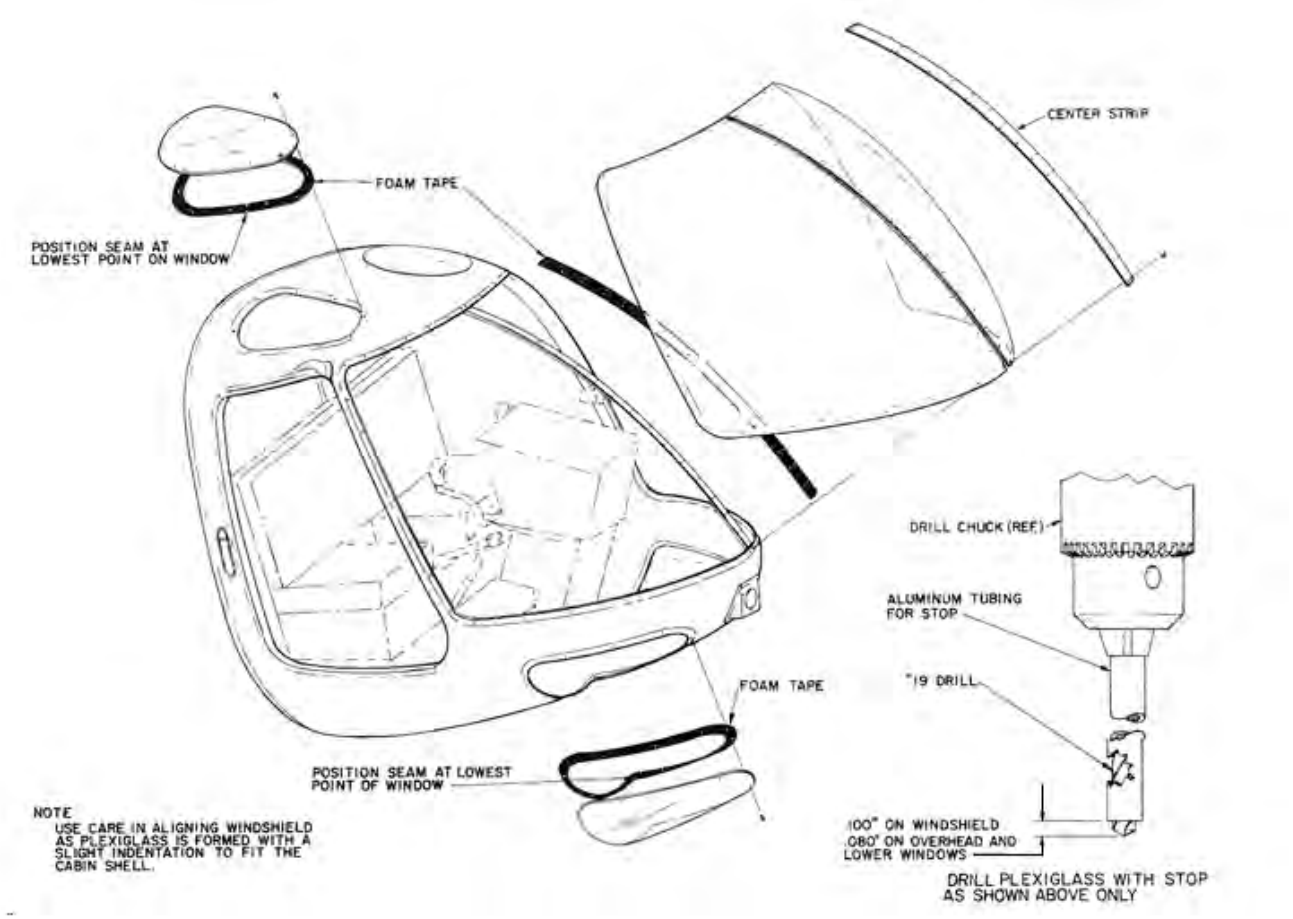

Figure 8-3. 280F Series Windshield

UNCONTROLLED COPY WHEN DOWNLOADED OR PRINTED

Visit www.enstromhelicopter.com for instructions to order an original manual and to register for email notification of updates.

CAUTION: DRILL BITS CAN BE GROUND TO A VERY SHARP POINT TO AID IN DRILLING PLEXIGLASS. USE CARE IN DRILLING TO PREVENT CRACKING GLASS. DO NOT DRILL THROUGH INNER FIBERGLASS INTERIOR TRIM WHEN DRILLING SIDE AND BOTTOM OF WINDSHIELD.

(8) Drill approximately six to eight holes through windshield on top and bottom for mechanical fasteners (Clecos) using a #41 drill bit.

(9) Remove windshield. Clean fiberglass recess of cabin with acetone. Lightly sand bonding edge of windshield and clean with acetone.

(10) Apply foam tape to center strip bar of cabin. Use 3M Brand tape #4016 (or equivalent), 1 inch wide by 1/16 inch thick.

(11) Apply bonding sealant PR1425 B-2 (or equivalent) to recess in cabin frame using a putty knife. Spread adhesive approximately 1/8 inch to 3/16 inch thick.

NOTE: Follow the exact mixing requirements of two-part adhesives or sealants.

NOTE: Do not apply PR1425 B-2 (or equivalent) to the center strip area.

(12) Install windshield in position and press firmly against adhesive.

(13) Temporarily install mechanical fasteners (Clecos) to hold windshield in position until PR-1425 B-2 (or equivalent) is set up.

CAUTION: ALLOW ADHESIVE TO DRY APPROXIMATELY 24 HOURS BEFORE INSTALLING RIVETS TO PREVENT CRACKING GLASS.

(14) Run a #30 drill through rivet holes to remove bonding adhesive.

(15) Drill through all existing rivet holes in plexiglass with a modified #19 drill. See Figure 8-3 for drill modification.

CAUTION: DRILL THROUGH PLEXIGLASS ONLY WITH #19 DRILL. DO NOT DRILL THROUGH FIBERGLASS CABIN FRAME.

(16) Apply a small bead of Phenoseal 102 (or equivalent) on each side of windshield center seam and install center strip in position. Secure with rivets.

(17) Install and secure rivets in remaining holes.

(18) Remove mechanical fasteners (Clecos).

(19) Prepare windshield edges for paint. Repaint outer mount edge.

G. Overhead and Lower Window Removal (All F/FX)

(1) Drill out existing rivets.

(2) Remove plexiglass from double backing tape.

(3) Remove tape from cabin recessed area.

UNCONTROLLED COPY WHEN DOWNLOADED OR PRINTED

Visit www.enstromhelicopter.com for instructions to order an original manual and to register for email notification of updates.

H. Overhead and Lower Window Installation (All F/FX)

NOTE: The overhead and lower window installations may be installed using either double backing foam tape or bonding sealant.

(1) Clean recess in cabin with acetone or equivalent.

(2) If using bonding sealant, proceed to step (3). Install double backing foam tape in position. Use 3M Brand tape #4016 (or equivalent), 3/4 inch wide x 1/16 inch thick

NOTE: Install tape with ends meeting at bottom side of window to prevent possible leakage through seam. Do not remove paper backing from outboard side of tape until window has been marked for cutting.

(3) Position new plexiglass window over recessed area of cabin and apply masking tape to temporarily hold window in place.

(4) Apply 1/4 inch wide masking tape following contour of window and recessed area of cabin to mark window size for cutting.

(5) Remove window and cut around the tape line using an oscillating saw or a die grinder with a 1/16 inch cut-off wheel. Leave approximately an extra inch on the outside of the perimeter.

CAUTION: SUPPORT THE TAIL OF THE ACRYLIC WHILE CUTTING TO PREVENT THE TAIL FROM BREAKING OFF AND CRACKING THE ACRYLIC.

(6) Place the window back over the opening and secure with tape. Mark the edge of the finished window perimeter with tape or a fine marker.

NOTE: Ensure approximately a 1/8 inch gap between the edge of the window and the edge of the cabin contour.

(7) Carefully cut the window to size, using the cut-off tools, bench belt sander, or sandpaper on a block. Sand and round the edges to a smooth finish.

NOTE: Check fit to cabin and re-sand as required.

(8) Clean outer edge of window with acetone.

(9) If using bonding sealant, proceed to step (10). If installing tape, remove paper backing from foam tape and install window in position. Press firmly against tape. Proceed to step (11).

(10) Apply bonding sealant PR1425B1/2 (or equivalent) to recess in cabin frame using a putty knife. Spread adhesive approximately 1/8 inch to 3/16 inch thick.

NOTE: Follow the exact mixing requirements of two-part adhesives or sealants.

CAUTION: ALLOW ADHESIVE TO DRY APPROXIMATELY 24 HOURS BEFORE INSTALLING RIVETS TO PREVENT CRACKING GLASS.

(11) Match drill to old rivet holes in cabin using a #30 drill or drill new holes through window and cabin at midpoints between old holes.

UNCONTROLLED COPY WHEN DOWNLOADED OR PRINTED

Visit www.enstromhelicopter.com for instructions to order an original manual and to register for email notification of updates.

NOTE: Drill bits can be ground to a very sharp point to aid in drilling plexiglass. Use care in drilling to prevent cracking glass.

(12) Drill through all rivet holes in plexiglass with a modified #19 drill. See Figure 8-3 for drill modifications.

(13) Secure window in place with rivets.

(14) Prepare window edges for paint. Repaint outer mount edge.

8-4 CABIN DOORS

A. Door Removal (F-28F) (See Figure 8-4)

CAUTION: SUPPORT CABIN DOOR WHEN REMOVING THE HINGE PINS TO PREVENT DAMAGE TO THE DOORS.

CAUTION: TAKE CARE NOT TO DAMAGE THE WINDSHIELD DURING CABIN DOOR REMOVAL AND INSTALLATION.

NOTE: Removal procedures are the same for removing either cabin door.

NOTE: Cabin door installation may be configured with a bungee.

(1) Disconnect lower bungee (1) by removing screw (8) at the forward corner of the door frame.

(a) If equipped with a gas spring (9), remove safety clips (10) and pull gas spring off the ball joints (11) at both ends.

(2) Pull hinge pins (2) from upper and lower hinges (5) and carefully remove door.

B. Door Inspection (F-28F)

(1) Inspect cabin doors and hinges for condition, damage, and security.

(2) Inspect door latching assembly for condition, damage, and proper operation.

(3) Inspect window and pop-out vent for condition, damage, and security.

C. Door Repair (F-28F)

(1) Repair door I/A/W AC 43.13-1B. Contact Enstrom Helicopter Corporation Customer Service for detailed damage and repair limitations.

(2) Replace seal strips around door if deteriorated or damaged. Attach new seal using trim adhesive 8031 (3M) or equivalent.

(3) Replace components of door latching assembly that are unserviceable.

D. Door Installation (F-28F) (See Figure 8-4)

(1) Align door to hinges (5) and install hinge pins (2).

UNCONTROLLED COPY WHEN DOWNLOADED OR PRINTED

Visit www.enstromhelicopter.com for instructions to order an original manual and to register for email notification of updates.

(2) Attach lower bungee (1), if equipped, with screw (8) at the forward corner of the door frame.

(3) Install gas spring (9), if equipped, by reversing the procedure in Para. 8-4, A, 1.

(4) Check operation of the door latch and upper and lower retaining lugs.

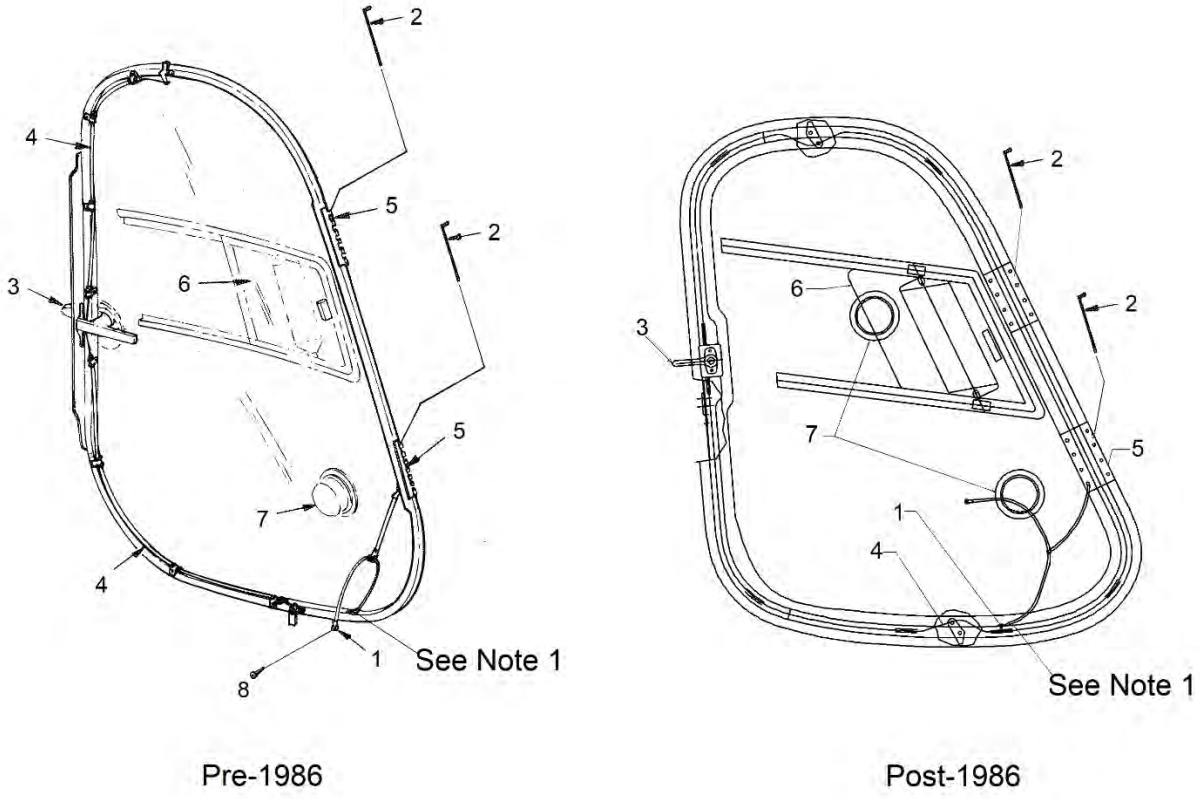

Sheet 1 of 2

1.	Bungee (See Note 1)	5.	Hinge
2.	Hinge Pin	6.	Sliding Vent Window
3.	Door Handle	7.	Snap Vent
4.	Cable	8.	Screw

Note
1. Bungee and/or gas spring may be present. See Sheet 2 for gas spring attachment.

Figure 8-4. F-28F Cabin Door Installation

UNCONTROLLED COPY WHEN DOWNLOADED OR PRINTED

Visit www.enstromhelicopter.com for instructions to order an original manual and to register for email notification of updates.

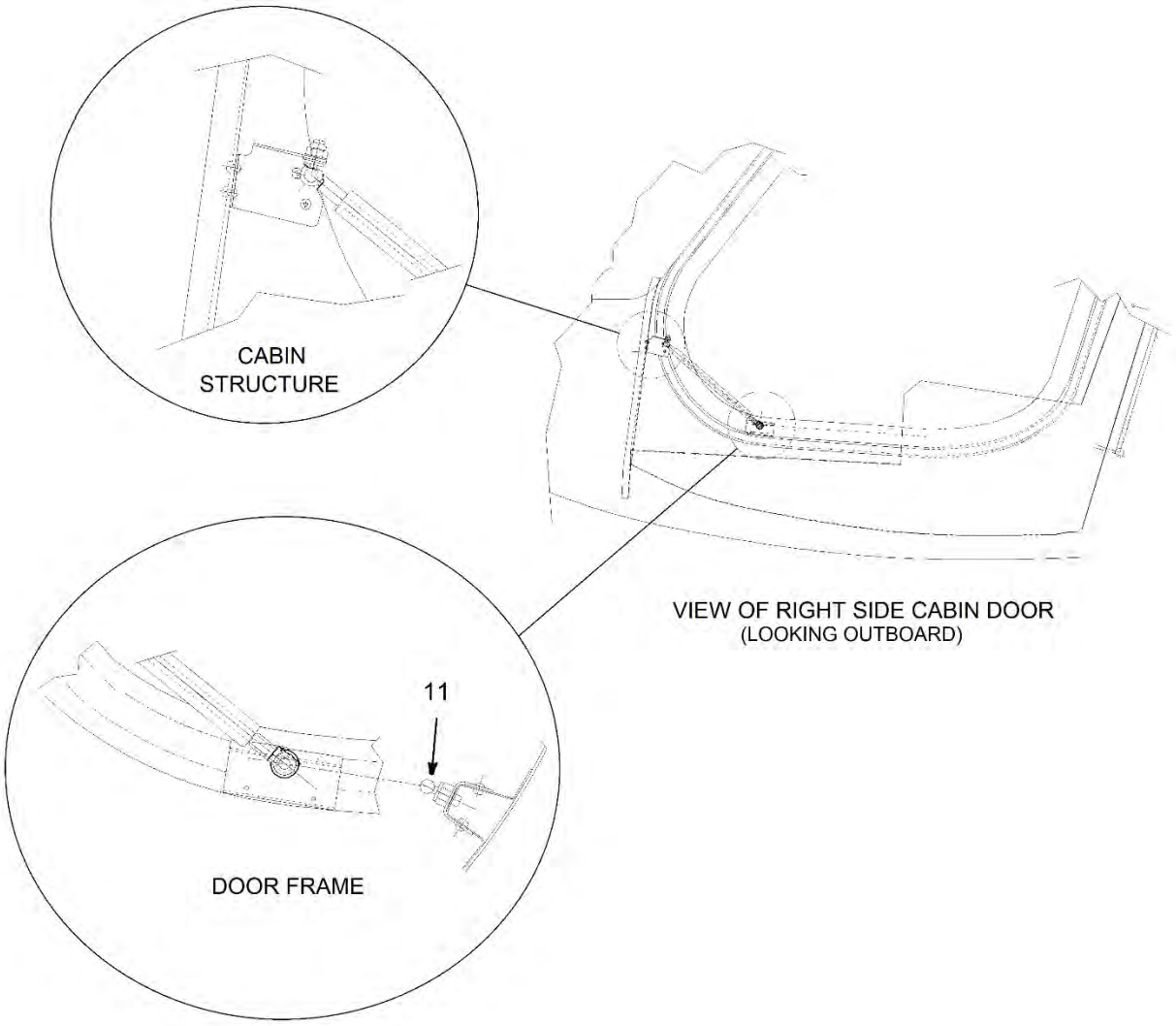

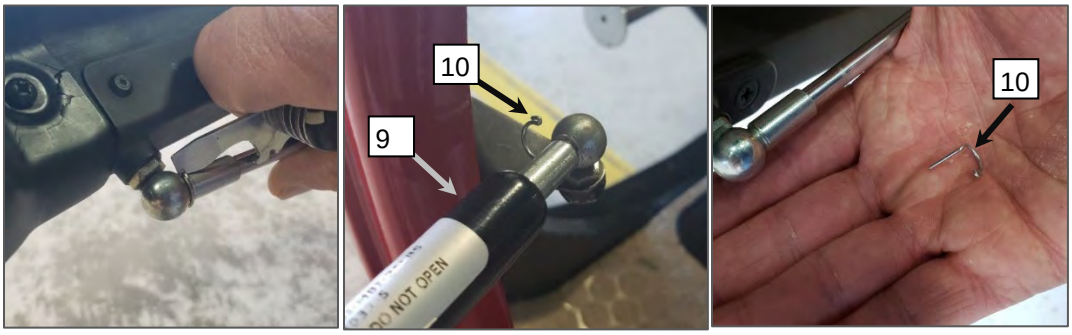

Sheet 2 of 2

9. Gas Spring
10. Safety Clip
11. Ball Joint

Figure 8-4. F-28F Cabin Door Installation

UNCONTROLLED COPY WHEN DOWNLOADED OR PRINTED

Visit www.enstromhelicopter.com for instructions to order an original manual and to register for email notification of updates.

E. Door Glass Removal (F-28F) (See Figure 8-4)

NOTE: For installation of door glass on later F-28F model doors (S/N 744 and subsequent), refer to the Enstrom Helicopter Corporation website, 280FX Technical Tips for replacing the door glass. Otherwise, the door should be returned to Enstrom Helicopter Service for glass replacement.

(1) Disconnect cables and remove door handle (3).

NOTE: Remove the roll pin from the inboard door handle and separate and remove external door handle.

(2) Remove cables (4) and lower bungee (1) from door frame.

(3) Mark door hinges (5) as to their position on door frame and remove hinges.

NOTE: Hinges cannot be alternated for upper and lower positions.

(4) Remove sliding vent window (6) and snap vents (7).

(5) Remove foam strip from outer edge of door frame.

(6) Remove screws securing T-molding and remove molding.

(7) Remove screws from door glass. Heat bonded area of plexiglass with a portable heat gun and remove glass from door frame.

NOTE: Use care in glass removal to prevent distortion of tubular door frame.

(8) Remove excess bonding adhesive from door frame with a putty knife. Sand frame clean.

NOTE: When ordering a replacement door glass, be sure to specify if a sliding vent window and/or snap vents are required so they can be installed at the factory.

F. Door Glass Installation (F-28F) (See Figure 8-4)

NOTE: Check fit of door frame to cabin before locating glass on frame.

(1) Position new glass on door frame and match drill to screw holes using a #41 drill. Countersink holes using an 82° countersink.

NOTE: Replacement door glass has been rough cut to size. Final sanding of plexiglass to door frame is completed after bonding procedure is done.

(2) Remove door glass from frame and clean bonding surfaces of both items using acetone or equivalent.

(3) Apply bonding adhesive PR-1425 B-2 (or equivalent) to bonding surface of door frame. Spread adhesive approximately 1/8 inch to 3/16 inch thick.

(4) Carefully install door glass on door frame.

NOTE: Install enough screws in door glass and frame to hold glass in position. DO NOT tighten screws until bonding adhesive is set up (approximately 24 hours).

UNCONTROLLED COPY WHEN DOWNLOADED OR PRINTED

Visit www.enstromhelicopter.com for instructions to order an original manual and to register for email notification of updates.

(5) Install screws to secure door glass to frame.

(6) Final fit plexiglass to door frame by sanding on belt sander.

(7) Install T-molding to door frame and secure with screws.

(8) Install foam strip on outer edge of door frame.

(9) Install and secure hinges (5) to their previously marked position on door frame.

(10) Prepare and repaint door frame.

(11) Install and secure door handles (3), cables (4), and latches.

(12) Install lower bungee (1) or gas spring (9) at forward corner of door frame, as applicable.

(13) Install door on aircraft with hinges (5) and check operation of door handle and latch.

G. Door Removal (280F Series) (S/N 2166 and Prior) (See Figure 8-5)

CAUTION: SUPPORT CABIN DOOR WHEN REMOVING THE HINGE PINS TO PREVENT DAMAGE TO THE DOORS.

CAUTION: TAKE CARE NOT TO DAMAGE THE WINDSHIELD DURING CABIN DOOR REMOVAL AND INSTALLATION.

NOTE: Removal procedures are the same for removing either cabin door.

NOTE: Cabin door installation may be configured with a retaining strap.

NOTE: Keep the upper door shims with the door as they are individually fitted.

(1) Remove screw from door strap (1) on the lower corner of the door.

(a) If equipped with a gas spring (5), remove safety clip (6) and pull gas spring off ball joint (7). (Refer to Figure 8-5.2.)

(2) Remove bolt (2) and spacer (3) from hinge pivot point at the top of the door.

(3) Carefully lift door from cabin frame.

G.1 Door Removal (S/N 2167 and Subsequent) (See Figure 8-5.1)

NOTE: Removal procedures are the same for removing either cabin door.

CAUTION: SUPPORT CABIN DOOR WHEN REMOVING CLEVIS PINS TO PREVENT DAMAGE TO THE DOORS.

(1) Open door and hold it in the open position.

(2) Remove safety pin (6) from gas spring (5) and pull gas spring (5) off ball joint (7). (Refer to Figure 8-5.2)

(3) Remove upper and lower door hinge quick disconnect pins or cotter pins (4) and clevis pins (3), as applicable, and remove door.

UNCONTROLLED COPY WHEN DOWNLOADED OR PRINTED

Visit www.enstromhelicopter.com for instructions to order an original manual and to register for email notification of updates.

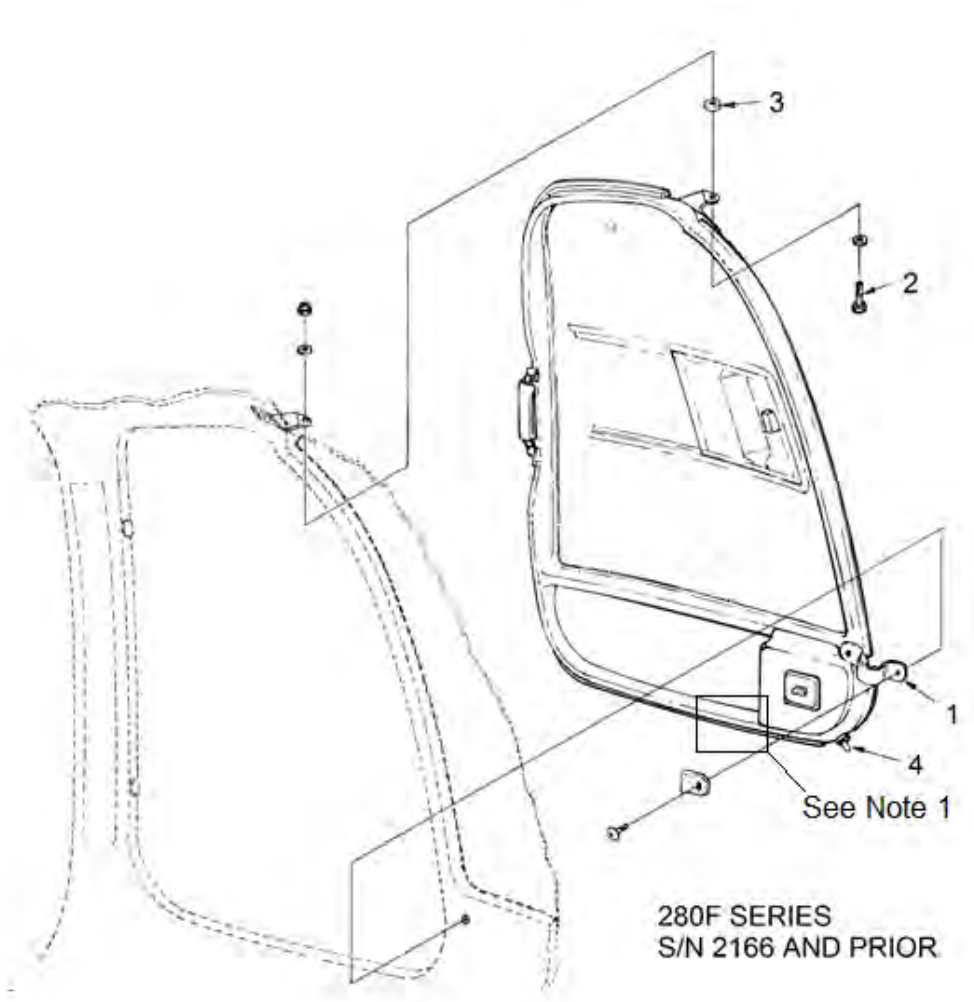

1. Door Strap
2. Bolt
3. Spacer
4. Pivot Peg

Note 1: See Figure 8-5.2 for gas spring attachment.

Figure 8-5. 280F Series Cabin Door

UNCONTROLLED COPY WHEN DOWNLOADED OR PRINTED

Visit www.enstromhelicopter.com for instructions to order an original manual and to register for email notification of updates.

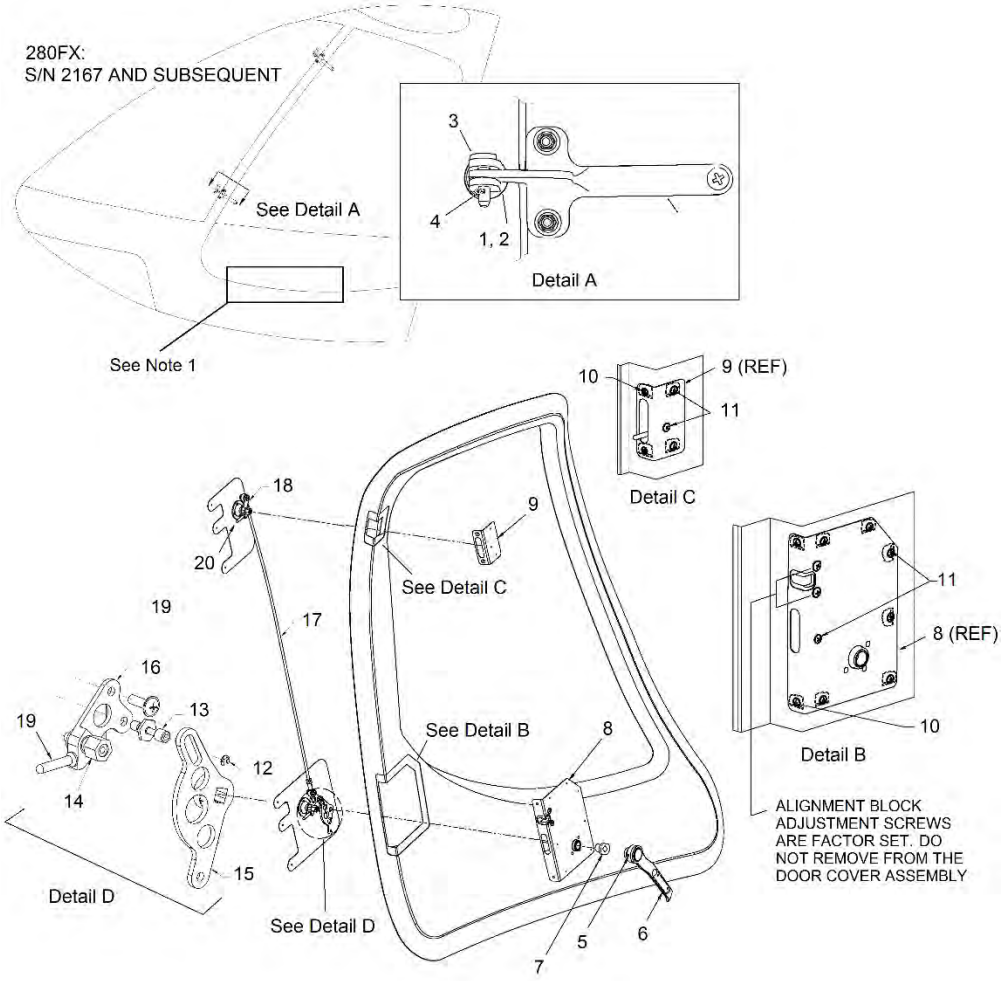

1.	Hinge Post	11.	Screw
2.	Hinge Bushing (hidden)	12.	Retaining Ring
3.	Clevis Pin	13.	Cam Roller
4.	Cotter Pin	14.	Shoulder Screw
5.	Set Screw	15.	Cam Lever Arm
6.	Door Handle (Interior)	16.	Lower Bellcrank Assembly
7.	Bushing	17.	Push-Pull Rod Weldment
8.	Lower Door Cover Assembly	18.	Upper Bellcrank Assembly
9.	Upper Door Cover	19.	Lower Dog Pin
10.	Screw	20.	Upper Dog Pin

Note 1: See Figure 8-5.2 for gas spring attachment.

Figure 8-5.1. 280FX Cabin Door

UNCONTROLLED COPY WHEN DOWNLOADED OR PRINTED

Visit www.enstromhelicopter.com for instructions to order an original manual and to register for email notification of updates.

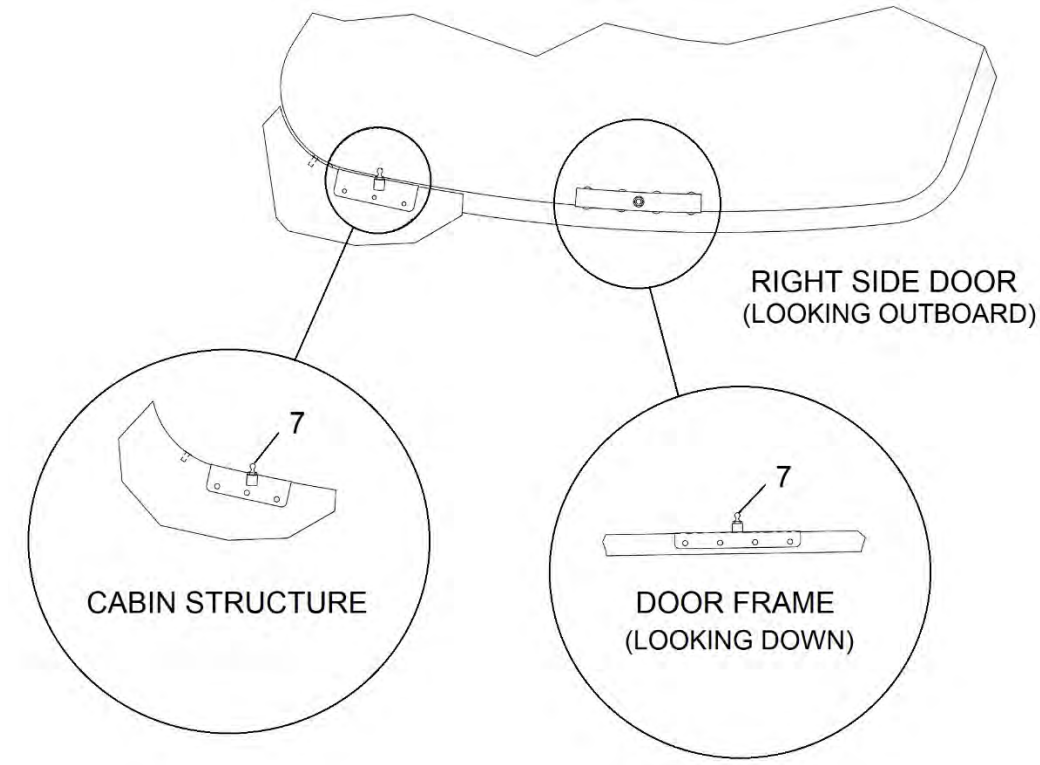

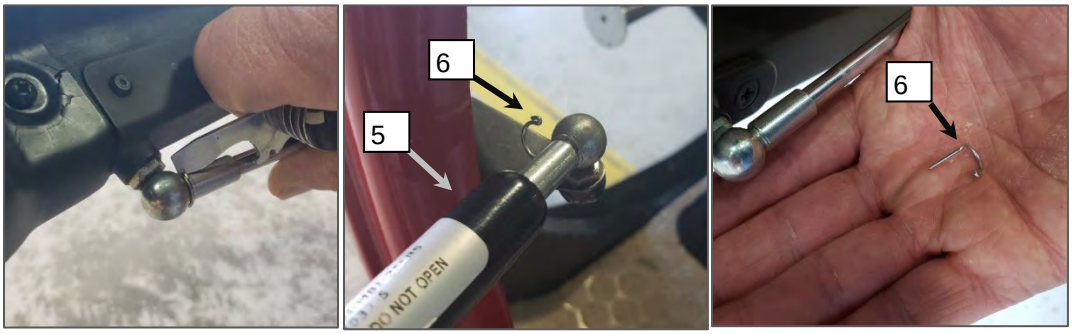

5. Gas Spring
6. Safety Clip
7. Ball Joint

Figure 8-5.2. Gas Spring Installation (280F Series)

UNCONTROLLED COPY WHEN DOWNLOADED OR PRINTED

Visit www.enstromhelicopter.com for instructions to order an original manual and to register for email notification of updates.

G.2 Door Disassembly – Access to the Latch Mechanism (280FX S/N 2167 and Subsequent)

(1) Remove door (Para. G.1).

(2) Loosen set screw (5) to remove inside door handle (6).

(3) Pull off bushing (7).

(4) Remove screws (10) and (11) and remove lower door cover assembly (8). **DO NOT** remove the two alignment block adjustment screws.

(5) Remove screws (10) and (11) and remove upper door cover (9).

G.3 Door Assembly (280FX S/N 2167 and Subsequent)

(1) Install screws (10) and (11) to install the upper door cover. Ensure screw (11) engages the shoulder screw (14).

(2) Install screws (10) and (11) to install the lower door cover assembly. Ensure screw (11) engages the shoulder screw (14).

(3) Push on the bushing (7).

(4) Install the inside door handle (6) and tighten the set screw (5).

H. Door Inspection (280F Series)

(1) Inspect cabin doors, hinges, bronze bushings (Figure 8-5.1, Item 2), and pins for condition, damage, and security.

(2) Inspect door latching assembly for condition, damage, and proper operation.

(a) (S/N 2167 and subsequent): For faulty door operation, remove the door bellcrank covers (Para. G.2):

1 Inspect the door cam mechanism for missing retaining ring (12), condition of cam roller (13), and condition and security of cam lever arm (15), bellcranks (16) and (18), and push-pull rod (17) attachment fasteners.

(b) Inspect the two bellcrank assembly dog pins (19) and (20) for parallel condition.

1 If a parallel condition does not exist between the two dog pins (19) and (20), loosen the jam nut(s) on either end of the push-pull rod (17) and turn the rod to align the dog pins (19) and (20). Re-tighten the jam nut(s).

(3) Inspect window and pop-out vent for condition, damage, and security.

UNCONTROLLED COPY WHEN DOWNLOADED OR PRINTED

Visit www.enstromhelicopter.com for instructions to order an original manual and to register for email notification of updates.

I. Door Repair (280F Series)

(1) Repair door I/A/W AC 43.13-1B. Contact Enstrom Helicopter Corporation Customer Service for detailed damage and repair limitations.

(2) Replace seal strips around door if deteriorated or damaged. Attach new seal using trim adhesive 8031 (3M) or equivalent.

(3) Replace components of the door latching assembly that are unserviceable.

J. Door Installation (280F Series) (S/N 2166 and Prior) (See Figure 8-5)

(1) Align bottom pivot peg (4) on lower corner of door with hole in cabin door frame and install door into position.

(2) Install spacer (3) and mount hardware in upper hinge. See Figure 8-5 for proper hardware installation.

(3) Secure door strap (1) on lower corner of door with screw or install gas spring, as applicable.

(4) Check door and door latch for proper operation.

J.1 Door Installation (S/N 2167 and Subsequent) (See Figure 8-5.1)

(1) Position door on hinges installed on cabin shell and install clevis pins (3) and cotter pins (4).

(2) Install gas spring (5) and safety clip (6).

(3) Check door and door latch for proper operation.

K. Door Glass Installation (280F Series)

NOTE: Refer to the Enstrom Helicopter Corporation website, 280FX Technical Tips for installing windows. Otherwise, the door should be returned to Enstrom Helicopter Service for glass replacement.

8-7 SEAT BELTS – SHOULDER AND LAP TYPE

A. Lap Belt Removal (Figure 8-6)

(1) Remove seat cushions.

(2) Disconnect attachment end of lap belts by applying pressure to the spring-loaded latch and opening it sufficiently to clear the structural attach point as it is lifted.

B. Shoulder Harness Removal (Figure 8-6)

(1) Remove fuel cells (Para. 13-10, B, (1)).

UNCONTROLLED COPY WHEN DOWNLOADED OR PRINTED

Visit www.enstromhelicopter.com for instructions to order an original manual and to register for email notification of updates.

(2) Remove screws, washers, and nuts (4 places) that attach each shoulder harness to the cabin backwall.

B.1. Lap Belt Inspection

NOTE: Any time the seat deck has been removed, perform the following inspection.

(1) Inspect the orientation of the belt fitting and locking spring latch.

NOTE: The belt fitting should be installed with the clasp facing down and the spring latch closed (see Figure 8-6).

(2) Inspect the general condition of the lap belt and buckle.

(3) Inspect the retaining bolt for proper operation and wear.

NOTE: Replace any defective lap belt assembly fittings or attachments.

C. Lap Belt Installation

NOTE: a. Lap belts must be connected to the specified structural attach points to ensure belt security.

b. There are four structural attach points to accommodate two- and three-passenger configurations; (1) left rear cabin wall, (2) right of left center seat beam, (3) right of right center seat beam, and (4) right rear cabin wall.

c. Secure the lap belts to the airframe by applying downward pressure on the structural attach point with the latch portion of the belt attachment mechanism until it locks in place.

(1) Left seat position - install as follows:

(a) Attach seat belt half with release mechanism to left rear cabin wall structural attach point. See Figure 8-6, Point "A".

(b) Attach seat belt half with flat tab to structural attach point right of left center seat beam. See Figure 8-6, Point "B".

(2) Center seat position (if required) - attach as follows:

(a) Attach seat belt half with release mechanism to the structural attach point right of left center seat beam. See Figure 8-6, Point "B".

NOTE: Install on right side of left seat position belt.

(b) Attach seat belt half with flat tab to structural attach point right of right center seat beam. See Figure 8-6, Point "C".

(3) Right seat position - attach as follows:

(a) Attach seat belt half with release mechanism to the structural attach point right of right center seat beam. See Figure 8-6, Point "C".

UNCONTROLLED COPY WHEN DOWNLOADED OR PRINTED

Visit www.enstromhelicopter.com for instructions to order an original manual and to register for email notification of updates.

NOTE: Install on right side of center seat position belt (if installed).

(b) Attach seat belt half with flat tab to right rear cabin wall structural attach point. See Figure 8-6, Point "D".

D. Shoulder Harness Installation

(1) Attach shoulder harness to cabin backwall with screws, washers, and nuts (4 places per attachment) (shown in Figure 8-6, Detail C, Detail D, and Detail E).

(2) Install fuel cells (Para. 13-10, B, (2)).

UNCONTROLLED COPY WHEN DOWNLOADED OR PRINTED

Visit www.enstromhelicopter.com for instructions to order an original manual and to register for email notification of updates.

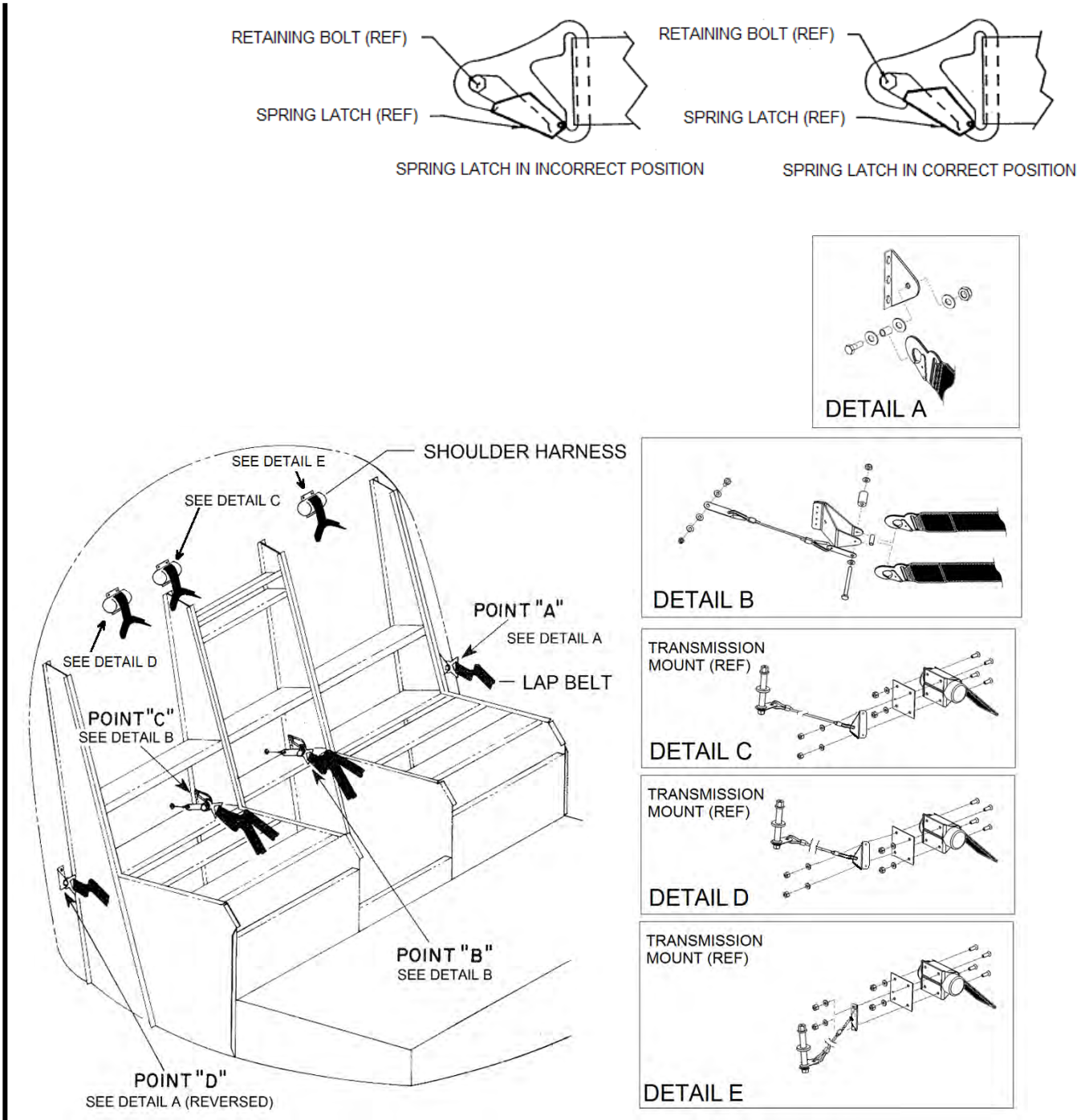

Figure 8-6. Seat Belt Attachment

Visit www.enstromhelicopter.com for instructions to order an original manual and to register for email notification of updates.

8-8 SEAT DECK ASSEMBLY

A. Seat Deck Removal

(1) Remove seat cushions and seat belts.

(2) Disconnect cyclic stick canon plugs and remove cyclic boots.

(3) Remove the two aft screws that secure the fiberglass cover over the pilot's collective stick, loosen the forward screw, and rotate the cover out of the way.

(4) Remove screws securing fiberglass cover over collective push-pull rod at top of seat deck and remove cover.

(5) Remove handles from clutch engagement lever.

NOTE: Handles are screwed together.

(6) Release and remove retention pin and remove co-pilot's collective stick.

(7) Remove screws from the battery access (or ELT access, if equipped) cover, if installed.

(8) Remove screws securing fiberglass seat deck in place and carefully lift seat deck from seat structure.

B. Seat Structure Assembly Inspection

(1) Inspect structure for corrosion, cracks, deformation, evidence of working rivets, and damaged or loose/missing hardware.

(2) Inspect pylon attachments for corrosion, damage, proper security of and damage to the attachment hardware.

(3) Inspect cyclic bellcrank brackets (upper cabin mount) at the top backwall structure for corrosion, cracks, deformation, and security. (Refer also to SDB 0126.)

C. Seat Structure Repair

(1) Replace damaged or missing hardware.

(2) Repair damage to the structure I/A/W AC 43.13-1B. Contact Enstrom Helicopter Corporation Customer Service for detailed damage and repair limitations.

D. Seat Deck Installation

(1) Install fiberglass seat deck over clutch engagement lever and into position. Secure in place with attachment screws.

(2) Install co-pilot's collective stick into bellcrank.

(a) Insert the retention pin with lever aligned with the collective and fold the lever down.

NOTE: The pin lever is correctly installed when the cam locking feature is engaged. If the lever folds down with no resistance felt, insert the pin 180° the other way, and fold down. A resistance should be felt as the cam engages.

UNCONTROLLED COPY WHEN DOWNLOADED OR PRINTED

Visit www.enstromhelicopter.com for instructions to order an original manual and to register for email notification of updates.

WARNING: The pin must engage the hole in the collective stick. After installing the pin, verify the security of the collective stick by trying to pull the collective stick out of the stick fitting.

1 To ensure the pin is fully engaged in the hole in the collective stick, try to pull the collective stick out of the stick fitting. If the collective stick does not pull out of the stick fitting, it is properly secured.

2 Twist the throttle full travel and verify the pilot's and copilot's throttles move together.

3 Move the collective full travel and move throttle full travel with the collective fully up and full down. Verify there is not binding or interference in the throttle or collective.

(3) Install handles in clutch engagement lever and screw together to secure.

(4) Install fiberglass cover over collective push-pull rod at top of seat deck and secure with screws.

(5) Install fiberglass cover over pilot's collective stick and secure with screws.

(6) Install battery (12V installation only) or ELT (if equipped) access panel and secure with screws, if installed.

(7) Install cyclic stick boots and secure the cyclic canon plugs into their receptacles.

(8) Install seat belts and seat cushions.

8-9 LANDING GEAR

A. Landing Gear Assembly

(1) Landing Gear Removal

(a) Install sling T-0011 on main rotor hub and hoist helicopter to remove weight from landing gear. See Figure 4-3.

(b) Remove left and right engine doors and bottom cowling.

(c) To remove the landing gear assembly as a unit from the pylon, proceed as follows: (See Figure 8-7)

1 Disconnect engine controls, EGT/EDM, heater control and quarter panels.

2 Remove top bolt from pylon mount clamps on cross tubes (4 places).

3 Lower and remove landing gear assembly.

(d) Remove individual landing gear items as follows: (See Figure 8-8)

NOTE: See Paragraphs 8-9, B, C, and D for removal or replacement of skid shoes, ground handling wheels, or oleo struts.

UNCONTROLLED COPY WHEN DOWNLOADED OR PRINTED

Visit www.enstromhelicopter.com for instructions to order an original manual and to register for email notification of updates.

1 Skid tube (1): Remove six attachment bolts from landing gear legs (2). Remove skid tube assembly.

2 Landing gear leg (2): Remove oleo. Disconnect drag strut (3) from landing gear leg (2). Remove upper pivot bolt from clamp (8) on cross tube and remove the three lower bolts securing landing leg to skid tube. Remove landing gear leg.

3 Cross tube (6): Disconnect drag strut (3) and landing gear leg (2) from cross tube clamp (8). Remove cross tube assembly.

(2) Landing Gear Inspection

(a) Cross Tubes:

NOTE: Cross tubes with bows up to 0.5 inches/12.7 mm are serviceable and may be flipped over and reinstalled.

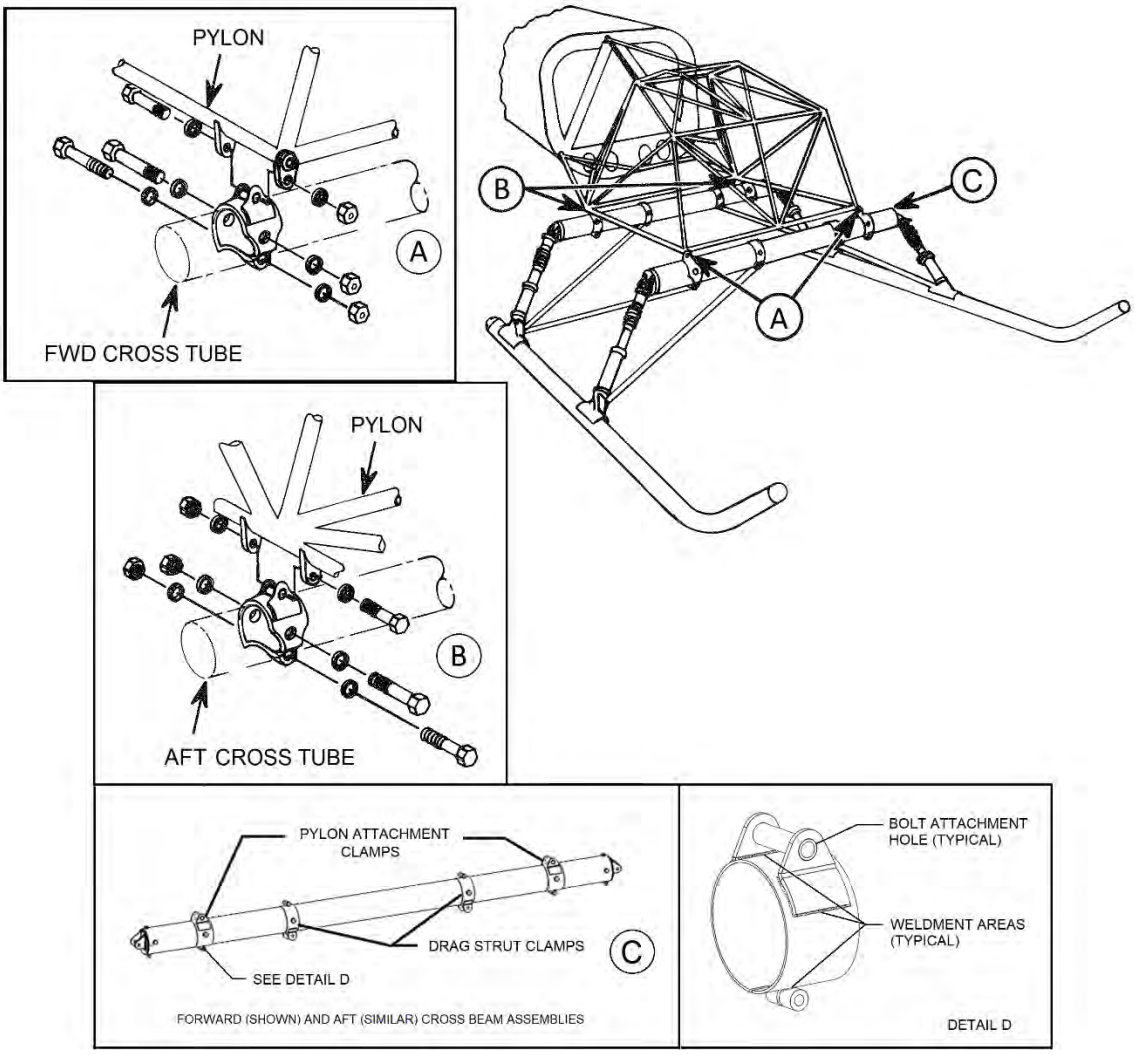

Figure 8-7. Landing Gear to Pylon Attachment and Cross Tube Clamp Detail

UNCONTROLLED COPY WHEN DOWNLOADED OR PRINTED

Visit www.enstromhelicopter.com for instructions to order an original manual and to register for email notification of updates.

1 Cross tubes with bows up to 0.5 inches/12.7mm are serviceable. Replace cross tubes with a bow greater than 0.5 inches/12.7 mm, bends, cracks, or elongated bolt holes

2 Replace end caps that are cracked or the bolt holes are elongated.

(b) Landing Gear Legs and Drag Struts:

1 Landing gear legs and drag struts that are bent, bowed, or cracked may be repaired I/A/W AC 43.13-1B. Contact Enstrom Helicopter Corporation Customer Service for detailed damage and repair limitations.

a Visually inspect each landing gear leg in the area noted in Figure 8-7.1 for cracks. Utilize a tapping procedure in any area that may exhibit surface blisters or roughness.

2 Replace landing gear legs and drag struts with elongated bolt holes.

(c) Skid Tubes:

1 Skid tubes that are bent, bowed, dented, or have holes in them are repairable I/A/W AC 43.13-1B. Contact Enstrom Helicopter Corporation Customer Service for detailed damage and repair limitations.

2 Replace skid tubes with elongated bolt holes.

(d) Drag Strut and Pylon Attachment Clamps:

1 Visually inspect attachment clamps for elongated bolt holes, cracked weldments, corrosion, and security of hardware. Refer to Figure 8-8.1 for an example of weldment cracks.

a Replace clamps that exhibit cracks or cracked weldments, elongated bolt holes, and corrosion greater than .010 inch/0.25 mm deep. Corrosion equal to or less than .010 inch/0.25 mm deep may be blended and polished smooth.

b Secure loose attachment hardware (standard torque).

UNCONTROLLED COPY WHEN DOWNLOADED OR PRINTED

Visit www.enstromhelicopter.com for instructions to order an original manual and to register for email notification of updates.

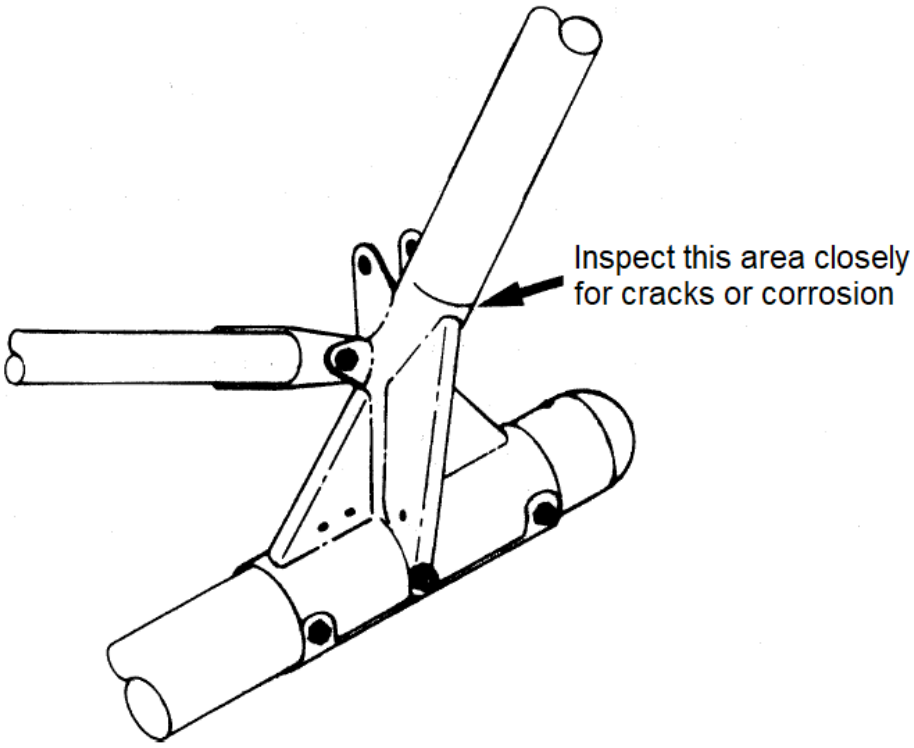

Figure 8-7.1. Landing Gear Leg Inspection

(3) Landing Gear Installation

(a) Install individual landing gear items as follows: (See Figure 8-8)

1 Skid tube (1): Install in reverse order of step (1), (d), 1.

2 Landing Leg (2): Install in reverse order of step (1), (d), 2.

3 Cross tube (6): Install in reverse order of step (1), (d), 3.

a Strut (3) attachment torque: 60 in-lb/6.8 Nm.

b Landing gear leg attachment torque at pivot points: 40-60 in-lb/4.5-6.8 Nm.

c Refer to Para. 8-9, D, 5 for oleo installation.

(b) Install the landing gear assembly in reverse order of steps (1), (a) through (c). Refer to Figure 8-7 for proper bolt orientation.

UNCONTROLLED COPY WHEN DOWNLOADED OR PRINTED

Visit www.enstromhelicopter.com for instructions to order an original manual and to register for email notification of updates.

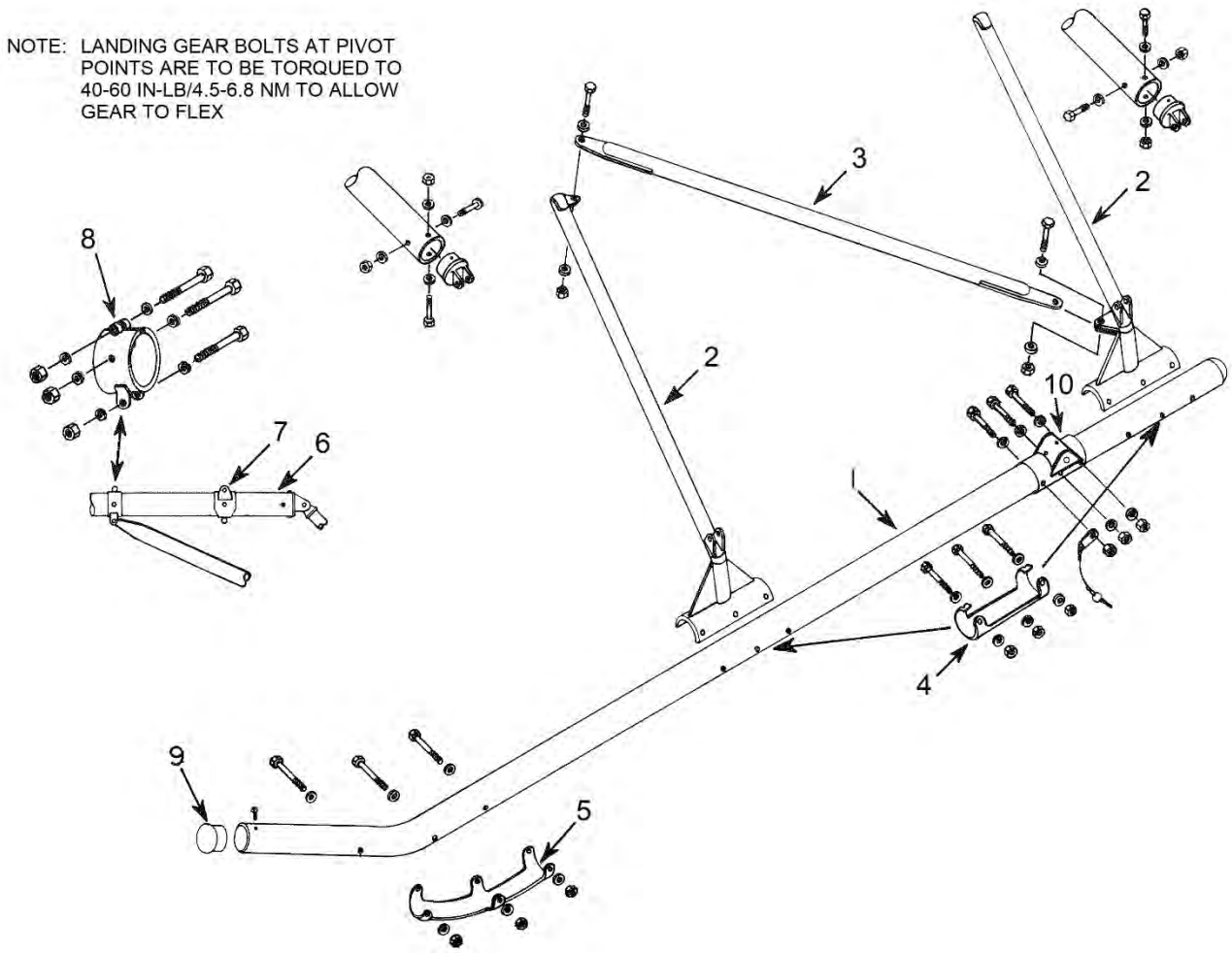

1. Skid Tube
2. Landing Leg
3. Drag Strut
4. Wear Plate
5. Forward Wear Plate
6. Cross Tube Assembly
7. Skid Clamp
8. Clamp
9. End Cap
10. Bracket Wheel Assy

Figure 8-8. Landing Gear Assembly Breakdown

UNCONTROLLED COPY WHEN DOWNLOADED OR PRINTED

Visit www.enstromhelicopter.com for instructions to order an original manual and to register for email notification of updates.

B. Skid Shoes

(1) Inspection

(a) Inspect the skid shoes for cracked or torn mounting straps and for excessive wear.

(2) Skid Shoes Replacement (See Figure 8-8)

(a) Skid shoes may be replaced by one of the following methods:

1 Jack up landing gear.

2 Install sling T-0011 on main rotor hub and hoist helicopter.

3 With ground handling wheels down, pull down on aft of tailcone.

4 Replace skid shoes (4) or (5) by removal and replacement of the attachment bolts (three forward, two aft) securing them to skid tubes.

C. Ground Handling Wheels

(1) Operational Description

Each landing gear skid tube has provisions for easily installed landing gear wheel assemblies. Each assembly has a manually operated over-centering device to lift the skids for installation of the wheels or retract them for flight. The ground handling wheels should be retracted and the helicopter allowed to rest on the skids when the engine run-up is being performed or when helicopter is parked. To raise or lower ground handling wheels, proceed as follows: (See Figure 8-9)

WARNING: APPROXIMATELY 135 LB OF FORCE IS EXERTED THROUGH THE WHEEL BAR WHEN RAISING OR LOWERING WHEELS. IT IS IMPORTANT THAT THE WHEEL BAR DOES NOT SLIP OFF THE END OF THE AXLE OR THE OPERATOR DOES NOT LOSE HIS GRIP ON THE HANDLE, PARTICULARLY WHEN REMOVING OR REPLACING THE LOCK PIN, OR POSSIBLE INJURY COULD RESULT.

(a) To lower the wheels, the slot in the end of wheel bar should be inserted on the axle with the handle facing forward. Then, keeping the handle aligned on the flats of the axle, apply a constant pressure to the handle and release the retaining pin. An upward and aft lifting motion is applied to the handle until the retaining pin holes line up for pin insertion. Insert pin and remove wheel bar. Keep feet from under skid tubes, stay outside of the skid, and do not straddle during procedure.

(b) To raise the wheels the same procedure is used with the exception that the wheel bar is installed with the handle facing aft, and the operator must restrain the wheel bar from rotating downward after the retaining pin is removed.

(2) Ground Handling Wheels Removal (See Figure 8-10)

(a) Place wheel assembly in retracted position.

UNCONTROLLED COPY WHEN DOWNLOADED OR PRINTED

Visit www.enstromhelicopter.com for instructions to order an original manual and to register for email notification of updates.

(b) Rotate retaining pin ring up from the axle assembly. Remove snap ring (7) and washer (6) from outboard end of axle (4). Pull pin (5) and slide wheel and axle assembly from mount bracket.

(c) Remove nut (1) and washer (2) from axle and slide wheel assembly from axle.

(3) Ground Handling Wheels Installation (See Figure 8-10)

NOTE: Tires must be at least 6 ply. It is recommended that replacement tires are ordered directly from Enstrom.

(a) Install wheel assembly (3) on axle (4) and secure with washer (2) and nut (1).

(b) Inflate tire to 75 psi.

CAUTION: WHEEL ASSEMBLY MUST BE SECURED ON AXLE BEFORE INFLATING TIRE TO PREVENT POSSIBLE SEPARATION OF THE RIM.

(c) Apply Lubriplate 630-AA (MIL-PRF-81322) to axle and slide axle in mount bracket on skid tube with wheel in raised position.

(d) Install retaining pin (5) and secure with washer (6) and snap ring (7). Rotate retaining pin ring down and around the axle assembly to secure.

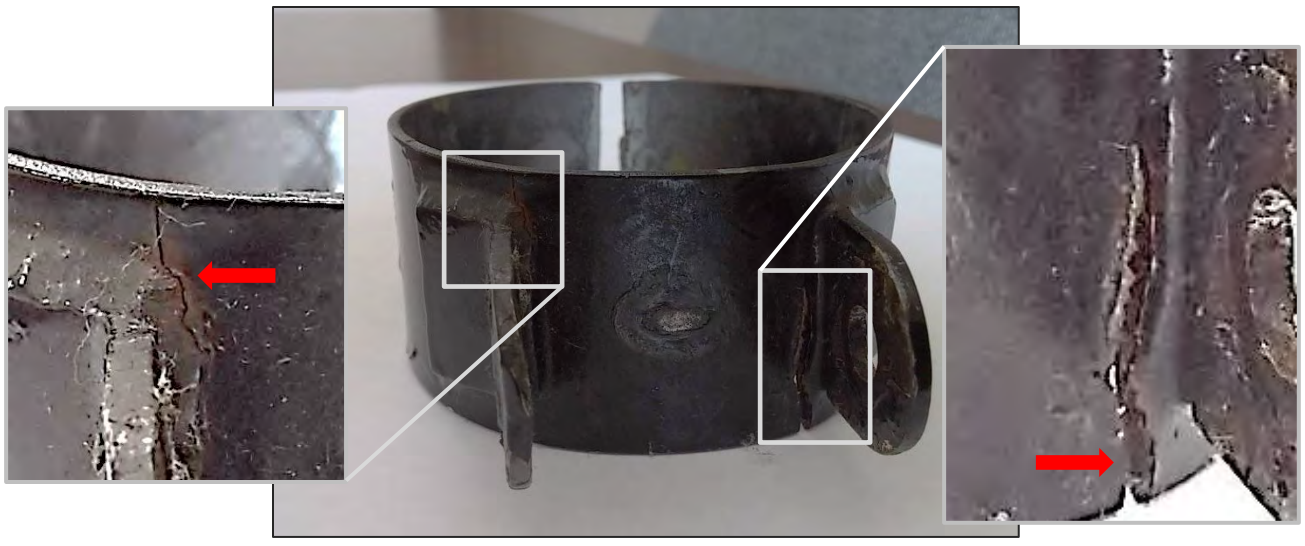

Figure 8-8.1 Cross Tube Weldment Clamp Cracks

UNCONTROLLED COPY WHEN DOWNLOADED OR PRINTED

Visit www.enstromhelicopter.com for instructions to order an original manual and to register for email notification of updates.

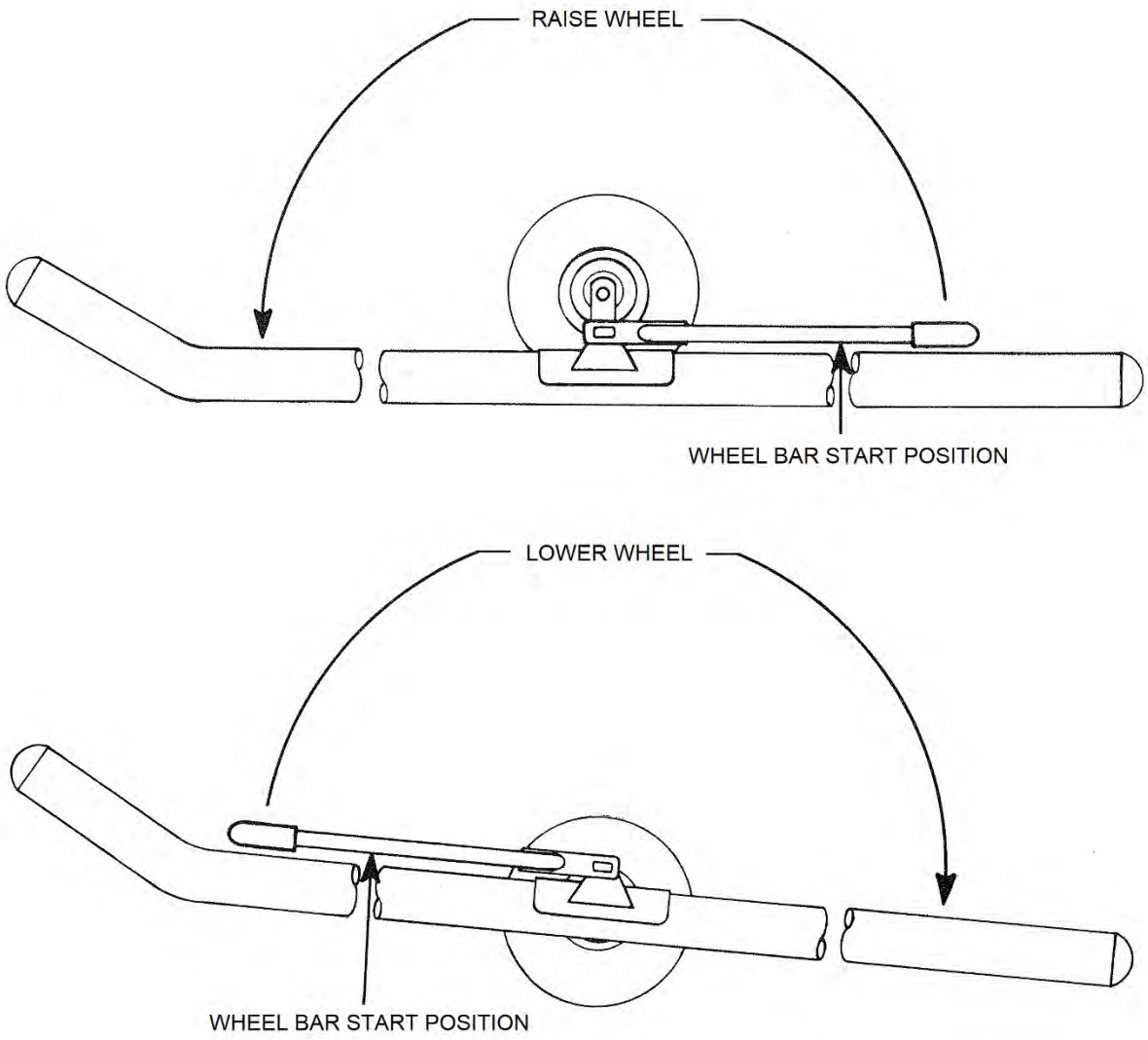

WARNING - USE CAUTION WHEN RAISING OR LOWERING WHEELS WITH HANDLE, CARE SHOULD BE TAKEN TO KEEP HANDLE ALIGNED WITH AXLE AND FIRMLY HELD WHILE ENGAGED FOR ROTATION

Figure 8-9. Ground Handling Wheel Operation

UNCONTROLLED COPY WHEN DOWNLOADED OR PRINTED

Visit www.enstromhelicopter.com for instructions to order an original manual and to register for email notification of updates.

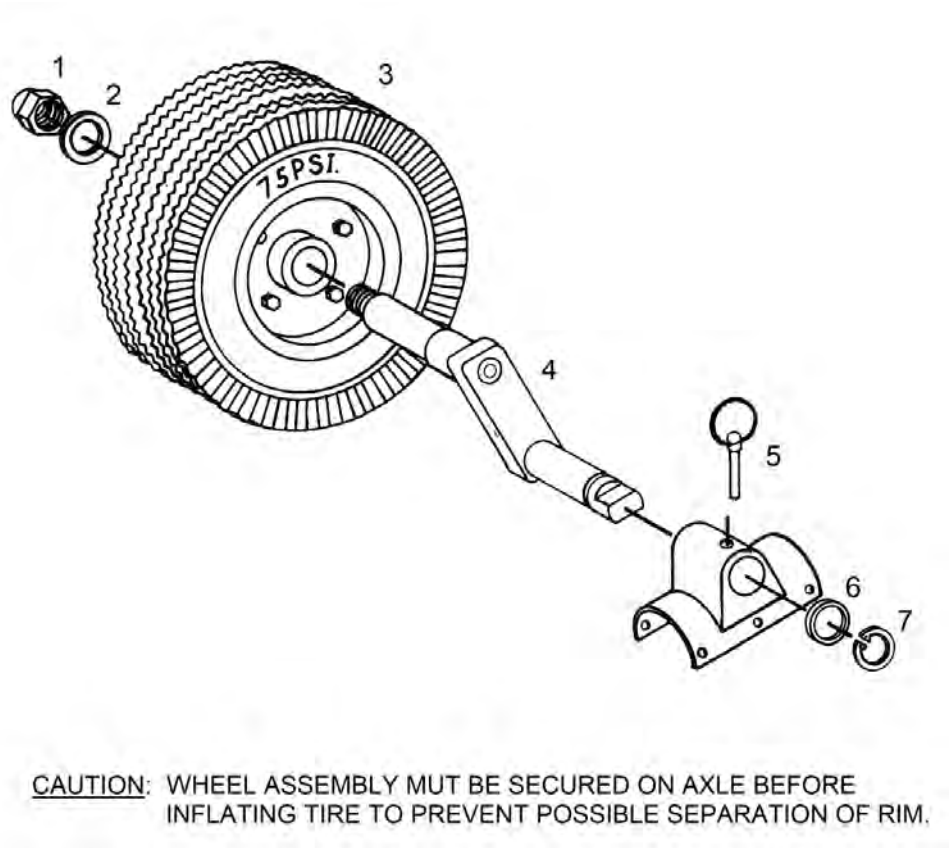

1. Nut
2. Washer
3. Wheel Assembly
4. Axle
5. Pin
6. Washer
7. Snap Ring

Figure 8-10. Ground Handling Wheel Removal and Installation

UNCONTROLLED COPY WHEN DOWNLOADED OR PRINTED

Visit www.enstromhelicopter.com for instructions to order an original manual and to register for email notification of updates.

D. Oleo Struts

(1) Oleo Strut Removal (See Figure 8-11)

NOTE: The weight of the aircraft must be removed from oleo struts before strut removal can be accomplished. Install sling T-0011 on main rotor hub and hoist entire helicopter.

(a) Remove upper and lower attachment hardware from oleo strut at cross tube and landing gear leg.

(b) Remove oleo assembly.

(c) Remove bolts securing universal links (1) to oleo strut and remove links.

(2) Oleo Strut Disassembly (See Figure 8-12)

(a) Remove cap from valve (1) and slowly open valve to relieve pressure from oleo strut.

(b) Remove valve (1) and pour hydraulic fluid from oleo into a pan.

(c) Use a razor blade or knife to cut the paint line between the seal housing assembly (6) and the cylinder assembly (14) (Figure 8-12).

CAUTION: DO NOT CLAMP THE CYLINDER IN A VISE BY THE EARS AT THE BOTTOM OF THE CYLINDER. USE TOOL T-0169-1.

(d) Install tool T-0035 on the seal housing assembly (6) and T-0169-1 between the ears to unscrew the seal housing from the cylinder.

(e) Slowly pull piston assembly out of cylinder assembly.

(f) Lay piston shaft assembly with edge of piston (13) on a block of wood, and using a flat punch remove dowel pin (12).

CAUTION: USE CARE IN REMOVING DOWEL PIN TO PREVENT DAMAGE TO PISTON (13).

(f) Remove valve assembly (13) from piston shaft (2).

(g) Remove rebound rings (11) and spacer (10).

(h) Slide guide shaft assembly (6) and boot (3) from piston shaft.

(i) Disassemble guide shaft assembly (6) as follows:

1 Remove O-ring (7) from O.D. of threaded area.

2 Remove O-ring (9) and back-up ring (8) from I.D. of guide shaft assembly.

3 Remove wiper (4) from brass guide (5).

4 If brass guide is worn or damaged, it can be removed by tapping out with a nylon drift.

UNCONTROLLED COPY WHEN DOWNLOADED OR PRINTED

Visit www.enstromhelicopter.com for instructions to order an original manual and to register for email notification of updates.

(j) Disassemble valve assembly (13), if required, as follows: (Figure 8-12, View B)

NOTE: Do not disassemble this unit unless damage or wear has occurred to valve (19).

1 Remove nuts (15) and washers (16).

2 Remove valve pistons (17) and valve springs (18) from shaft (20).

3 Carefully press shafts (20) from piston (19).

(3) Oleo Strut Inspection

(a) Inspect the oleos for damage, leakage, proper extension, and freedom of movement.

(b) When the strut is disassembled inspect in accordance with Table 8-1.

(4) Oleo Strut Assembly (See Figure 8-12)

(a) Assemble piston assembly (13), if required, as follows: (See Figure 8-12, View B)

1 Carefully press shafts (20) into the piston (19).

CAUTION: IF EXCESSIVE PRESSURE IS USED TO PRESS SHAFTS INTO THE PISTON, DAMAGE TO THE VALVE AREA OF THE PISTON CAN RESULT.

2 Install valve pistons (17) and springs (18) on the shafts.

3 Install washers (16) and nuts (15).

4 Adjust the valve and spring length to 1.60 inch ± .010 inch. Measurement is taken from the inner base of the piston (19) to the outboard edge of the valve piston (17). See Figure 8-12, Valve Setting Dimension.

(b) Assemble the guide shaft assembly (6) as follows:

1 Press brass guide (5) into position if previously removed

2 Install wiper (4) into the brass guide (5).

3 Install O-ring (7) on the O.D. of the guide shaft (threaded end).

4 Install back-up ring (8), then O-ring (9) into the groove in the I.D. of the guide shaft (threaded end).

CAUTION: THE CONVEX SIDE OF THE BACK-UP RING (8) MUST FACE TOWARD THE O-RING (9).

(c) Install oleo boot (3) on the piston shaft (2), if required.

UNCONTROLLED COPY WHEN DOWNLOADED OR PRINTED

Visit www.enstromhelicopter.com for instructions to order an original manual and to register for email notification of updates.

(d) Lubricate both ends of the guide shaft assembly in a pan of hydraulic fluid (MIL-PRF-5606) to provide lubrication for assembly and install the assembly on the piston shaft (2).

(e) Install spacer (10) on the piston shaft (2).

CAUTION: THE FLANGED END OF SPACER FACES TOWARD THREADS OF GUIDE SHAFT ASSEMBLY (6).

(f) Install rebound rings (11) - (5 each) on the piston shaft (2).

CAUTION: NOTCHES IN THE REBOUND RINGS MUST BE STAGGERED.

(g) Align the flow passage port on the inner edge of the piston assembly (13) to the flow passage hole in the piston shaft (2) and install the piston assembly.

(h) Secure valve to the piston shaft with dowel pin (12).

CAUTION: THE ENDS OF THE DOWEL PIN MUST BE SEATED BELOW THE O.D. SURFACE OF THE PISTON TO PREVENT POSSIBLE BINDING ON INSTALLATION IN THE CYLINDER ASSEMBLY.

(i) Slide the guide shaft assembly (6) and the rebound rings (11) up against the piston (13). Keep the rebound rings staggered.

(j) Clamp the cylinder assembly (14) in a vise using tool T-0169-1 in an upright position. Fill the cylinder to the base of the threads with hydraulic fluid (MIL-PRF-5606).

CAUTION: DO NOT CLAMP THE CYLINDER IN THE VISE BY THE EARS AT THE BOTTOM OF THE CYLINDER. USE TOOL T-0169-1.

CAUTION: NOTCHES IN THE REBOUND RINGS MUST BE STAGGERED.

NOTE: The piston must be inserted into the cylinder assembly slowly to allow the hydraulic fluid to work through the staggered notches of the rebound rings and the flow passage in the piston assembly.

(k) Install the piston and guide shaft assembly into the cylinder assembly. Slowly push the piston to the base of cylinder assembly (collapsed position).

NOTE: The guide shaft assembly will be torqued in a later step.

(l) Hand-tighten the guide shaft assembly (6) to the cylinder assembly (14). Make an index mark from the guide shaft assembly to the cylinder assembly.

(m) Install and secure oleo valve (1). Safety wire (MS20995C32) valve to mount flange of piston shaft.

(n) Loosen the air valve.

(o) Attach one end of a clear plastic hose to the oleo valve and the other end in a container of MIL-PRF-5606.

UNCONTROLLED COPY WHEN DOWNLOADED OR PRINTED

Visit www.enstromhelicopter.com for instructions to order an original manual and to register for email notification of updates.

(p) Open the air valve. Slowly pump the strut in and out until the hose is free of air bubbles when compressing the oleo assembly.

(q) Fully collapse the strut, tighten the air valve, and remove the hose.

(r) Torque the guide assembly using T-0169-1. Using the index mark, torque the guide assembly to the cylinder assembly by turning the index mark on the cylinder assembly approximately 1/4 inch past the index mark on the guide assembly.

NOTE: The oleo may be pressurized before or after installation in the helicopter. (If the oleo is not installed, pressurize to 200 psi (1,379 kPa) and check for leaks.)

(s) Connect the nitrogen pressure line to the oleo valve. Set the nitrogen pressure regulator to 400 psi (2,758 kPa). Remove the oleo from the vise and remove tools T-0035 and T-0169-1.

WARNING: THE PISTON SHAFT WILL EXTEND WHEN THE OLEO VALVE IS OPENED.

(t) Slowly open the oleo valve and allow the oleo to fill until the piston shaft is fully extended and the oleo pressure has equalized to the regulator pressure. Close the oleo valve.

(u) Close the nitrogen tank valve, set the regulator pressure back to zero, and disconnect the nitrogen pressure line from the oleo valve.

(v) Install the valve cap.

(w) Inspect the oleo for leaks.

(5) Oleo Strut – Installation (see Figure 8-11)

NOTE: Helicopter must be jacked or hoisted with a sling for oleo strut installation.

(a) Lubricate the attach bolt hardware with LPS 2, ACF 50, or MIL-PRF-81322 grease and install while wet.

(b) Place a light washer (2) on each side of universal link (1) and install between mount ears on oleo strut (2 places). Secure in place using bolt (5), light washers (3) and nut (4) (Figure 8-11). Note there is no washer under the head of the top inboard attachment bolt (P/N 28-17135-11).

(c) Place a light washer (2) on each side of universal link (1) and install the oleo assembly between mount ears on cross tube. Secure in place using bolt (5), heavy washers (3) and nut (4). Torque as follows:

NOTE: Install oleo struts with valves facing aft. See the following exception: Agriculture and float ships require rear oleo valves to face forward.

UNCONTROLLED COPY WHEN DOWNLOADED OR PRINTED

Visit www.enstromhelicopter.com for instructions to order an original manual and to register for email notification of updates.

1 Connect a spring scale to the bottom hole in the bottom universal link and torque the top attachment hardware until it requires 2 lb force to swing the oleo strut assembly in and out and fore and aft.

2 Use a beam type in/lb torque wrench to record the torque on the nut that is installed on the bolt facing aft.

3 Place a light washer on each side of the universal link and connect the bottom universal block to the landing gear leg.

4 Remove the hardware connecting the top of the oleo to the cross tube. Set the hardware aside in the same position and order for reinstallation.

5 Connect the spring scale to the top hole in the top universal link and torque the attachment hardware at the bottom universal block connections with a required 2 lb drag as in step 1 above.

6 Reinstall the top universal link to the cross tube. Ensure the hardware is installed in the position and order as previously installed.

7 Tighten the nut to the torque setting recorded in step 2.

(6) Service the oleos in accordance with Paragraph 4-20.

UNCONTROLLED COPY WHEN DOWNLOADED OR PRINTED

Visit www.enstromhelicopter.com for instructions to order an original manual and to register for email notification of updates.

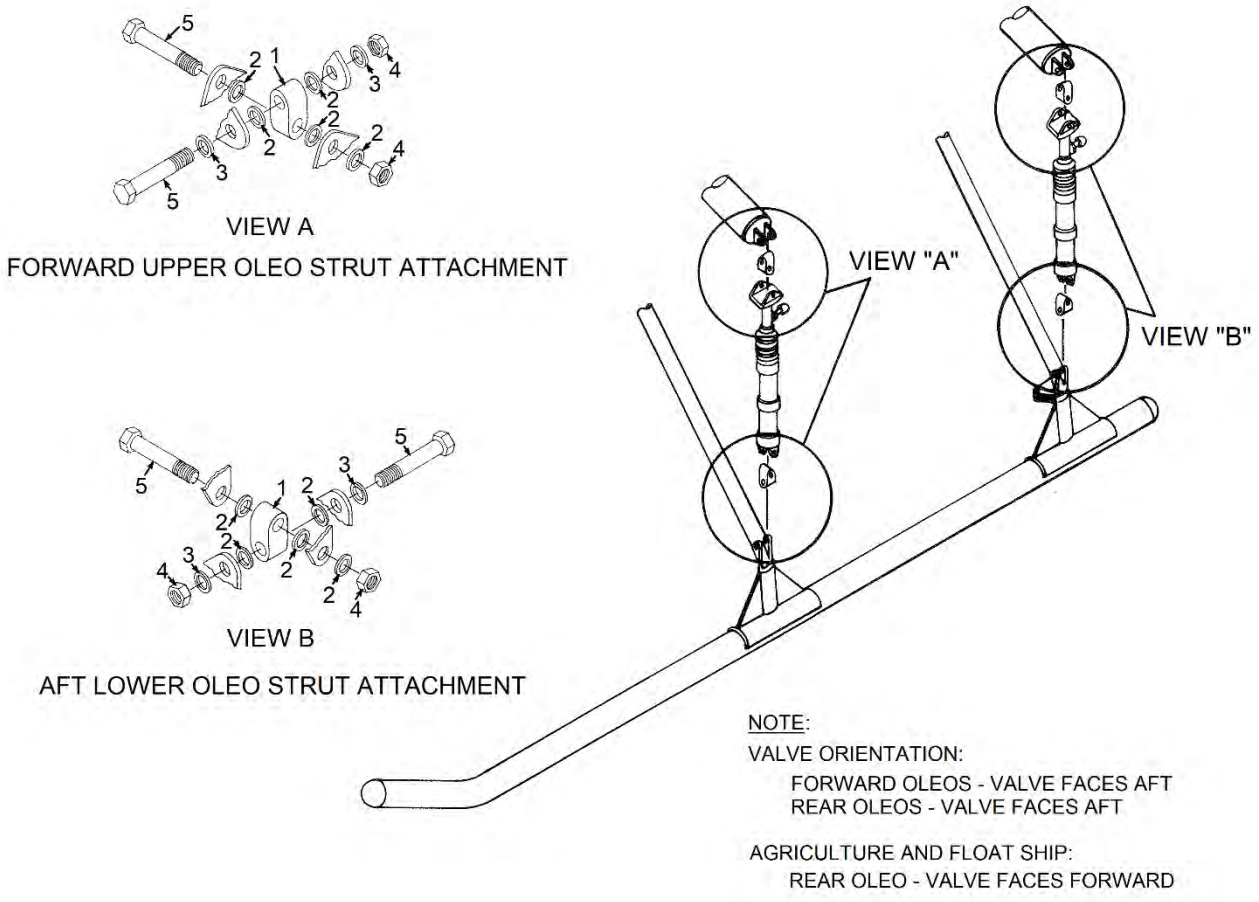

1. Universal Links
2. Light Washer
3. Light Washer
4. Nut
5. Bolt

Figure 8-11. Oleo Strut Installation

UNCONTROLLED COPY WHEN DOWNLOADED OR PRINTED

Visit www.enstromhelicopter.com for instructions to order an original manual and to register for email notification of updates.

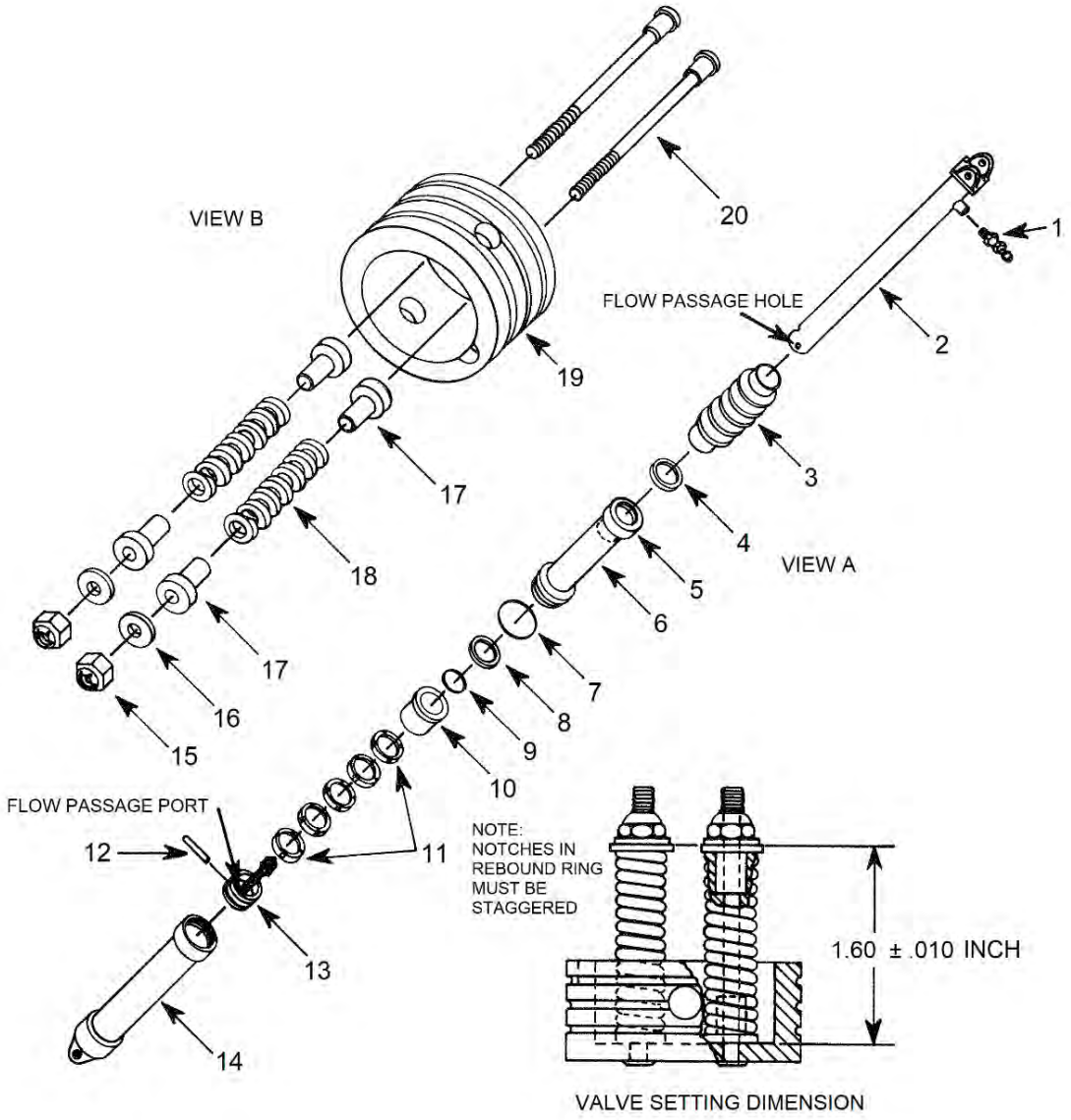

1. Valve
2. Piston Shaft
3. Boot
4. Wiper
5. Brass Guide
6. Shaft Assembly
7. O-ring
8. Back-up Ring
9. O-ring
10. Spacer
11. Rebound Rings
12. Dowel Pin
13. Valve Assembly
14. Cylinder Assembly
15. Nut
16. Washer
17. Valve Piston
18. Valve Spring
19. Piston
20. Shaft

Figure 8-12. Oleo Strut Assembly

UNCONTROLLED COPY WHEN DOWNLOADED OR PRINTED

Visit www.enstromhelicopter.com for instructions to order an original manual and to register for email notification of updates.

Table 8-1. Oleo Strut – Inspection

Part No.	Figure & Item No.	Part Name	Inspect	Serviceable Limits	Repair Limits	Repair or Action
AN6287-1 MS28889-2	Fig 8-12 Item 1	Valve	Check valve O-rings for cracks or tears	None allowed	Not repairable	Replace O-rings
28-17146-1 28-17146-7	Fig 8-12 Item 2	Piston Shaft	Shaft dia. 1.2495 to 1.2515	-.0005	-.0001	Return to factory for re-chrome and grind
			Check for nicks	None allowed	Not repairable	Replace piston shaft
			Dowel pin hole dia. .2490 to .2495	+.0005	Not repairable	Replace piston shaft
			Threaded boss – no crossed or missing threads	None allowed	Not repairable	Replace piston shaft
28-17158-1	Fig 8-12 Item 3	Oleo Boot	Check for cracks or tears	None allowed	Not repairable	Replace boot
28-17144-1 28-17144-5	Fig 8-12 Item 6	Guide Shaft Assembly	Threads – no crossed or missing threads	None allowed	Not repairable	Replace guide shaft
			Brass guide bore dia. 1.406 to 1.408	+.002	Not repairable	Replace brass guide (Part Number 28-17153)

UNCONTROLLED COPY WHEN DOWNLOADED OR PRINTED

Visit www.enstromhelicopter.com for instructions to order an original manual and to register for email notification of updates.

Table 8-1. Oleo Strut – Inspection

Part No.	Figure & Item No.	Part Name	Inspect	Serviceable Limits	Repair Limits	Repair or Action
28-17149-1	Fig. 8-12 Item 10	Spacer	Check for nicks and scratches	None allowed	.010 deep	Polish and blend
28-17151-1	Fig. 8-12 Item 11	Rebound Rings	Check for cracks or tears	None allowed	Not repairable	Replace rings
28-17147-3	Fig. 8-12 Item 12	Dowel Pin	O.D. dia. -.2505 to .2495	-.0002	Not repairable	Replace pin
28-17140-1	Fig. 8-12 Item 14	Cylinder Assembly	Bore dia. -1.7655 to 1.7645	+.001	Not repairable	Replace cylinder
			Threads – no crossed or missing threads	None allowed	Not repairable	Replace cylinder
			Mount holes in ears .312 diameter	+.001	Not repairable	Replace cylinder
28-17145-1	Fig. 8-12 Item 19	Piston	O.D. dia. -1.763 to 1.762	-.001	Not repairable	Replace piston
			Pin hole .2495 to .2490	+.002	Not repairable	Replace piston
			Check for scratches in O.D.	None allowed	.002 deep	Polish to remove with very fine sandpaper or emery cloth

NOTE: All O-rings should be replaced when rebuilding oleo strut assembly.

* All dimensions are in inches.

UNCONTROLLED COPY WHEN DOWNLOADED OR PRINTED

Visit www.enstromhelicopter.com for instructions to order an original manual and to register for email notification of updates.

INTENTIONALLY LEFT BLANK

UNCONTROLLED COPY WHEN DOWNLOADED OR PRINTED

Visit www.enstromhelicopter.com for instructions to order an original manual and to register for email notification of updates.

E. Landing Gear Fairings (280FX)

280FX models are equipped with landing gear fairings on the oleo struts and landing gear legs (Figure 8-12.1). These fairings are made of aluminum and fiberglass and are clamped onto the landing gear assembly. To check for proper strut extension, the helicopter should be sitting on level ground. The struts should then be leveled by rocking the helicopter by pushing up and down slightly on the tail cone. For the checking method, see Paragraph 4-20; for proper inflation, see Paragraph 4-20, A.

NOTE: For a float installation, the complete fairing assemblies must be removed. Prior to mount clamp removal, their position should be marked for ease of reinstallation.

(1) Removal – Access to Service Oleo Strut

(a) Remove 3 screws (9) from upper flex boot (6) lower end.

(b) Lift flex boot (6) upward to expose oleo valve for required servicing see Paragraph 4-20 Item 1.

(2) Removal – Access for Oleo Strut Removal

(a) Proceed with paragraph 1, steps (a) and (b).

(b) Remove 2 screws (10) front and back, top and bottom of oleo fairing (2).

(c) Slip rubber boot (4) at bottom of fairing (2) downward to clear attaching screws.

(d) Remove screws (5) from trailing edge of fairing (2).

(e) Spread fairing (2) carefully to clear oleo and remove from forward side.

(f) Remove 4 screws (7) and bolt (8) from lower fairing (1) or (3).

(g) To remove forward fairing (1) carefully spread to clear gear and oleo remove from forward side.

(h) To remove aft lower fairing (3) carefully spread to clear gear and oleo and slip forward on drag strut.

(i) Remove oleo as described in Paragraph 8-9, D.

(3) Inspection

(a) Check for cracked or damaged components and replace as required.

(b) Check for missing nut plates and screws replace as required.

(4) Assembly – After Oleo Replacement

(a) Reverse procedures in step (2) and step (1).

(b) Check for proper security.

UNCONTROLLED COPY WHEN DOWNLOADED OR PRINTED

Visit www.enstromhelicopter.com for instructions to order an original manual and to register for email notification of updates.

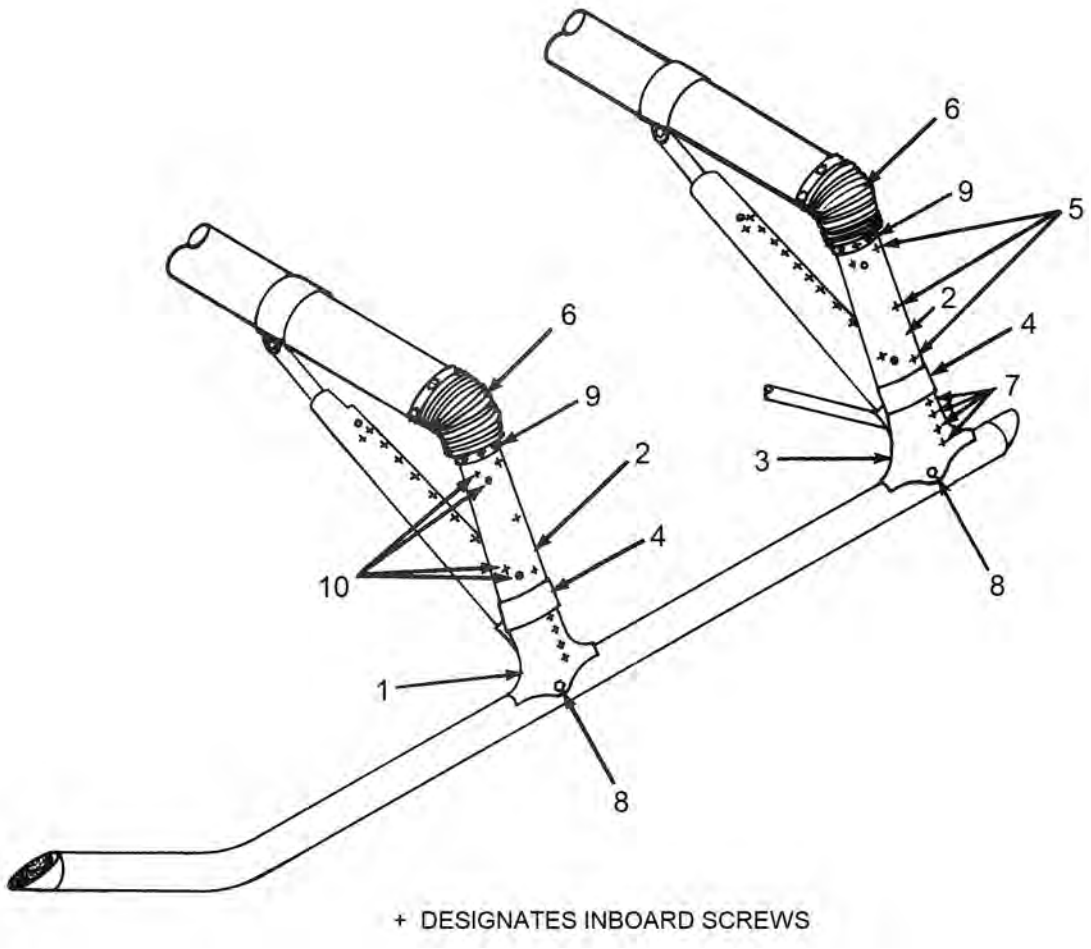

1. Forward Lower Fairing
2. Oleo Fairing
3. Aft Lower Fairing
4. Rubber Boot
5. Screw Attachment (Inboard)
6. Upper Flex Boot
7. Screw Attachment (Inboard)
8. Bolt Attachment
9. Screw Attachment
10. Screw Attachment (2 Inboard, 2 Outboard)

Figure 8-12.1. Landing Gear Fairings (280FX)

UNCONTROLLED COPY WHEN DOWNLOADED OR PRINTED

Visit www.enstromhelicopter.com for instructions to order an original manual and to register for email notification of updates.

8-10 PYLON

A. Pylon Removal and Installation

The pylon assembly supports all major structural and drive train components of the helicopter. The removal and installation of the pylon is accomplished by completing the removal and installation procedures for the following items:

(1)	Cabin Assembly	See Paragraph 8-1
(2)	Tailcone Assembly	See Paragraph 8-12
(3)	Main Rotor Transmission	See Paragraph 11-6
(4)	Powerplant	See Paragraph 13-2
(5)	Landing Gear	See Paragraph 8-9

B. Pylon Inspection

Inspection is limited to a field survey of the pylon condition. Visually inspect all members of the pylon for the following:

(1) Cracks and dents
(2) Integrity of finish
(3) Evidence of corrosion
(4) Security of welded joints
(5) Scuffing and abrasion

C. Pylon Repair

Damage to the pylon section tubes can be repaired in accordance with FAR 43. Special care must be taken during such repairs as not to distort the structure. Remove minor surface corrosion and paint the area using MIL-PRF-23377 primer or equivalent. Repair limit ≤ 10% wall thickness (e.g., .0035 inch for a .035 inch thick wall).

8-11 BAGGAGE COMPARTMENT

A. Baggage Compartment Removal (See Figure 8-13)

(1) Remove baggage compartment door as follows: (See Figure 8-13, View A)

(a) Remove panel (1) from kick-in steps.

(b) Release fastener screws (2) on upper cowling.

(c) Remove the two screws (3), washers, and nuts from upper hinge pin post at top right corner of baggage compartment.

CAUTION: SUPPORT THE DOOR WHILE ATTACHMENT HARDWARE IS REMOVED.

(d) Turn key latch and open door.

(e) Lift upper cowling to slide it from pivot pins on door and remove door assembly.

(2) Remove upper and side cowling.

(3) Remove sheet metal flanges (4) from the right side, outboard edges of the baggage compartment.

UNCONTROLLED COPY WHEN DOWNLOADED OR PRINTED

Visit www.enstromhelicopter.com for instructions to order an original manual and to register for email notification of updates.

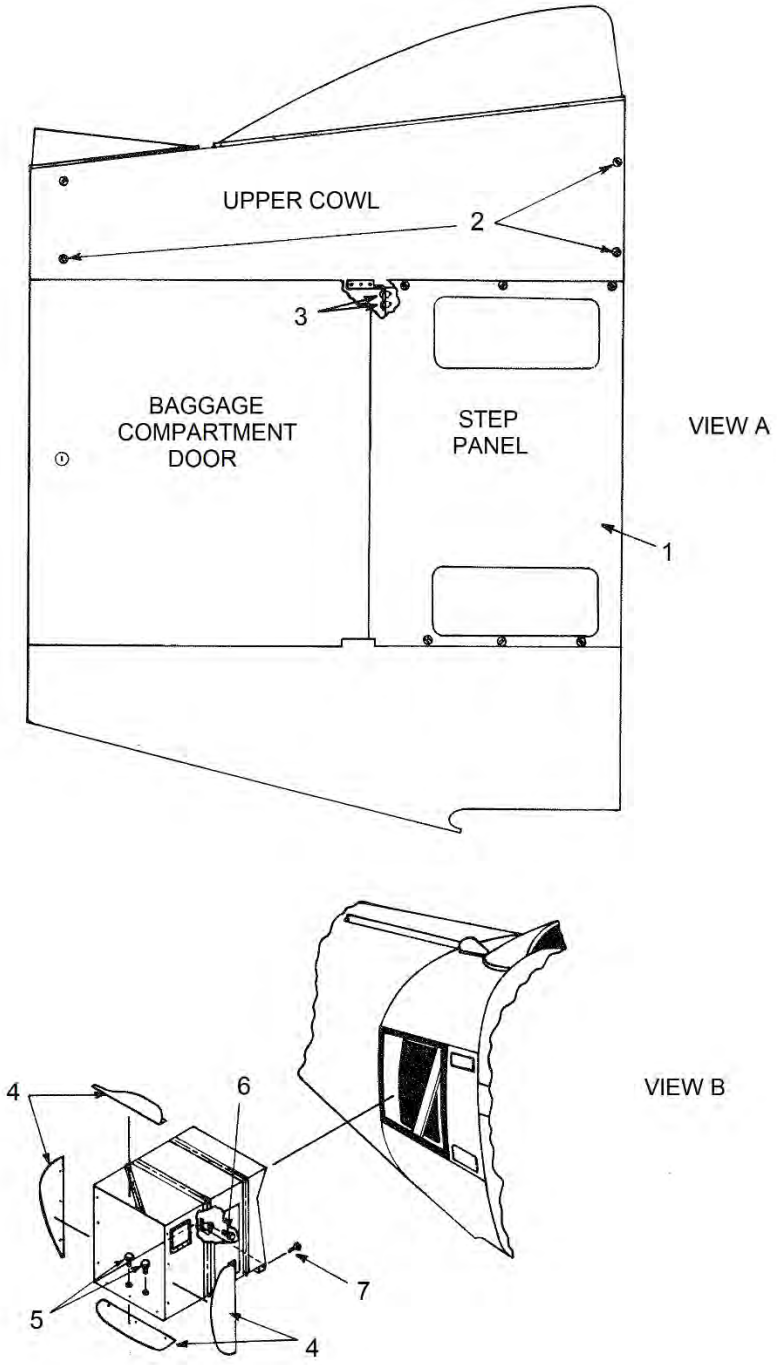

1. Panel
2. Screw
3. Screw
4. Flange
5. Screw
6. Bolt
7. Bolt

Figure 8-13. Baggage Compartment Installation

Visit www.enstromhelicopter.com for instructions to order an original manual and to register for email notification of updates.

(4) Remove the two attachment screws (5) securing baggage compartment to pylon.

(5) Remove attachment bolt (6) from lower left aft corner of baggage compartment.

(6) Remove bolt (7) from mount strap on lower left forward corner of baggage compartment.

(7) Carefully slide baggage compartment out of pylon structure.

B. Baggage Compartment Inspection

(1) Inspect the baggage compartment shelf and bulkheads for obvious damage, loose inserts, and the condition and security of the hardware.

(2) Inspect the mounting brackets for damage and security.

C. Baggage Compartment Repair

(1) Replace damaged or missing hardware.

(2) Repair damage to the baggage compartment shelf, bulkheads, or the mounting brackets I/A/W AC 43.13-1B. Contact Enstrom Helicopter Corporation Customer Service for detailed damage and repair limitations.

D. Baggage Compartment Installation (See Figure 8-13)

(1) Slide baggage compartment into pylon structure.

(2) Install bolt (6) in lower left aft corner of baggage compartment. Torque bolt and safety (MS20995C32).

(3) Install bolt (7) through mount strap and baggage compartment at lower left forward corner. Torque bolt.

(4) Install screws (5) securing front of baggage compartment to pylon.

(5) Install the sheet metal flanges (4) to front edges of baggage compartment and secure with screws.

(6) Install upper and side cowling.

NOTE: Do not secure the fasteners (2) on right side of upper cowling until baggage compartment door has been installed.

7 Lift upper cowling slightly and install baggage compartment door into position. Secure fastener screws (2) in upper cowling.

8 Install kick-in steps panel (1).

9 Close baggage compartment door and check key latch operation.

UNCONTROLLED COPY WHEN DOWNLOADED OR PRINTED

Visit www.enstromhelicopter.com for instructions to order an original manual and to register for email notification of updates.

8-12 TAILCONE ASSEMBLY

A. Tailcone Removal (See Figure 8-14)

(1) Remove wrap-around cowling.

(2) Disconnect flex coupling at forward end of tail rotor drive shaft. See Paragraph 10-6.

(3) Remove tach drive cover and O-rings.

(4) Disconnect static line from bulkhead fitting (1) on lower right side of tailcone.

(5) Disconnect strobe wires (2) at forward end of tailcone.

(6) Remove quick disconnect at antenna and rotating beacon, if so equipped.

(7) Remove inspection panel for access and remove cotter keys from pulleys. For older aircraft, disconnect the tail rotor cables (3) at control brackets on tail rotor transmission. Attach a string to each individual cable and pull cables through fair leads to forward portion of tail cone assembly.

NOTE: Disconnect strings from cables and allow them to remain routed through tailcone to facilitate installation upon assembly of tailcone assembly to pylon.

(8) Place two supporting fixtures (4) under fuselage of tailcone to support it during removal. Remove the three attachment bolts (5) and washers (6) securing tailcone to pylon and remove tailcone.

NOTE: If any shims are found they must be used at same points with new tailcone. If the tailcone was replaced, the tailcone alignment must be checked and shimmed accordingly.

NOTE: Use care in removal procedure to prevent possible damage to tail rotor assembly and/or transmission.

B. Tailcone Inspection

(1) Inspect the tailcone for buckling, corrosion, cracks, dents, and working rivets.

C. Tailcone Repair

(1) Repair damage to the tailcone I/A/W AC 43.13-1B. Contact Enstrom Helicopter Corporation Customer Service for detailed damage and repair limitations.

D. Tailcone Installation (See Figure 8-14)

NOTE: Realignment is required for a new tailcone installation. Refer to the Technical Tips Work Aid Document (WAD) link at Tailcone Alignment Work Aid.

(1) Align tailcone to pylon mount and install bolts (5), washers (6), and shims if used (3 places). Torque bolts to 240 in-lb and safety (MS20995C25).

CAUTION: DO NOT INSTALL THE NAS146DH-24 BOLT INTO EITHER OF THE BOTTOM TAILCONE ATTACHMENT HOLES. DAMAGE WILL RESULT.

UNCONTROLLED COPY WHEN DOWNLOADED OR PRINTED

Visit www.enstromhelicopter.com for instructions to order an original manual and to register for email notification of updates.

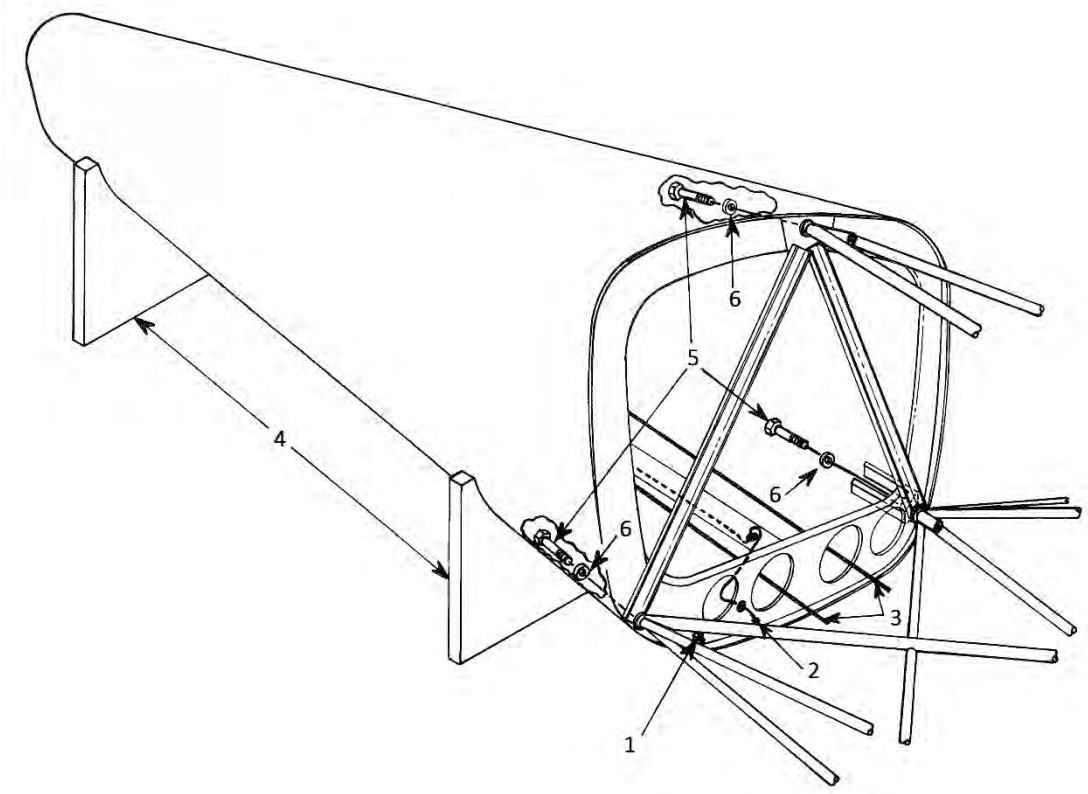

NOTE: There are two different sizes of bolts for mounting the tailcone to the pylon: 2 NAS146DH-22 bolts for the bottom, and 1 NAS146DH-24 bolt for the top. Each bolt gets 1 MS20002C6 washer with the chamfer towards the bolt head.

1. Bulkhead Fitting
2. Strobe Wire
3. Tail Rotor Cable
4. Support Fixture
5. Bolt
6. Washer

Figure 8-14. Tailcone Installation

UNCONTROLLED COPY WHEN DOWNLOADED OR PRINTED

Visit www.enstromhelicopter.com for instructions to order an original manual and to register for email notification of updates.

NOTE: Tailcone installation requires a person at the aft end to support the tailcone and two people on the forward end to lift and align the tailcone to the pylon.

(2) Connect previously routed strings to tail rotor cables (3) and pull cables back through fair leads to aft end of tailcone. Connect cables to tail rotor control brackets on transmission.

NOTE: Check cable tension and adjust if required. See Paragraph 10-7, Tail Rotor Cables.

(3) Install quick disconnects at antenna and rotating beacon if so equipped.

(4) Connect strobe wires (2) at forward end of tailcone.

(5) Connect static line to bulkhead fitting (1) on forward end of tailcone.

(6) Install O-rings on tach drive assembly and install tach drive cover.

(7) Connect flex coupling at forward end of tail rotor drive shaft. See Paragraph 10-6.

(8) Inspect all wires, cables, and attachment points for security.

(9) Install wrap-around cowling.

NOTE: If any area of the tail rotor assembly, tail rotor drive shaft, or tail rotor transmission was worked on, see Section 10 for correct installation procedures.

8-12.1 TUBULAR TAIL ROTOR GUARD (F-28F, 280FX)

A. Tail Rotor Guard Removal (See Figure 8-12.2)

(1) Remove bolt (13) and associated hardware (14 and 15), remove clamp (12).

(2) Remove bolts (16) and (23) with associated hardware (17 and 18).

(3) Remove the tail rotor guard assembly (11).

B. Tail Rotor Guard Inspection

(1) Inspect tail rotor guard for cracks or other damage.

(2) Inspect end fittings for loose or sheared rivets.

(3) Inspect end fittings for elongated holes or other damage.

(4) Check retention bolts for excessive wear and or thread damage.

(5) Inspect security of chafe pads (24 and 25) for tail guard protection.

NOTE: Some isolated cases of water have been found inside of the tail rotor guard assembly, if this condition is present, a 1/8 inch diameter hole may be drilled in the lowest point of tube for drainage.

UNCONTROLLED COPY WHEN DOWNLOADED OR PRINTED

Visit www.enstromhelicopter.com for instructions to order an original manual and to register for email notification of updates.

C. Tail Rotor Guard Installation

(1) Position tail rotor guard in forward upper fitting and install bolt (23) and hardware.

(2) Install clamp (12) and bolt (13) with associated hardware.

(3) Position aft tail rotor guard fitting into tail rotor gear box and install bolt (16) with required hardware, torque all three bolts (13), (16) and (23).

8-12.2 TAIL ROTOR DRIVESHAFT COVER (280FX)

The tail rotor driveshaft cover consists of four pieces of formed aluminum which are attached to the tailcone. This cover helps protect the driveshaft and the bearings from the weather, and also helps streamline the tailcone. The aftmost section of the cover is held in place with two screws and two quarter-turn fasteners. The three forward sections are held in place by hinges on the right side and quarter-turn fasteners on the left side. This provides easy, fast removal of the driveshaft cover for inspection and servicing the driveshaft and bearings. (See Figure 8-14.1.)

A. Cover – Opening for access to the tail rotor drive shaft

(1) Unfasten the ¼ turn fasteners (1) thru (4).

(2) Lift section (7) up from left side and over.

(3) Repeat same procedure for section (8) and (9).

NOTE: This will allow the required access to lubricate the tail drive bearing pillow blocks; the aft two pillow blocks are accessible without removing section (10).

(4) Removal of the aft section (10) for complete tail rotor drive shaft exposure can be accomplished by unfastening item (5) both sides and by removing screw (6) both sides.

NOTE: With covers in the condition noted in (1) through (4) allows for complete tail rotor drive removal, if required.

B. Inspection – Cover assembly only

(1) Check for cracks and missing or damaged fasteners, repair and or replace as required.

C. Cover – Closing

(1) Reverse procedures as noted items (4) through (1), paragraph A.

(2) Check final security after closing.

8-13 EXTENSION TUBE

A. Extension Tube Removal (See Figure 8-15)

(1) Disconnect the tail rotor cables and remove the tail rotor assembly and gearbox. See Paragraph 10-5, Tail Rotor Gearbox Removal

NOTE: The tail rotor assembly and gearbox can be removed as a unit.

UNCONTROLLED COPY WHEN DOWNLOADED OR PRINTED

Visit www.enstromhelicopter.com for instructions to order an original manual and to register for email notification of updates.

(2) Remove the tail rotor guard (1) to provide clearance for extension tube removal.

NOTE: The tail rotor guard on the 280F series helicopter can remain attached as it does not obstruct extension tube removal.

(3) Remove the left horizontal stabilizer to provide access to the inspection plate. See Paragraphs 8-14 through 8-16, Stabilizer Removal, as applicable.

NOTE: The stabilizer on the F-28F, post 1986, and 280F series helicopter is mounted forward of the inspection panel and does not require removal.

(4) Remove the attachment bolts from aft pillow block (2).

(5) Remove the inspection panel (3).

(6) Remove the three attachment bolts (4) from forward end of the extension tube inside tailcone. Access is gained through the inspection panel.

NOTE: Mark the orientation of the extension tube before removal.

(7) Remove the bolts from extension tube clamp (5) (4 places). Remove the extension tube (6) by pulling aft with a slight rotating action.

B. Extension Tube Inspection

(1) Inspect the extension tube for corrosion, cracks, dents, nicks, scratches, elongated bolt holes, condition and security of the nutplates installed in the end of the tube, and security of the installation.

(2) Inspect the extension tube mounting clamp for condition, damage, and security.

NOTE: Smoking around the rivets that are used to secure the extension tube to the bulkhead attachment clamp usually indicates looseness of the bracket.

(a) With a finger placed across the mounting clamp, manually push the extension tube up and down to determine if the attachment to the bulkhead is loose. If loose, replace defective rivets with screws. (Refer to step C, (2) below

C. Extension Tube Repair

(1) Corrosion, nicks, and scratches not exceeding 0.008 inch/.2 mm may be polished out. Replace damaged nut plates. Replace the extension tube if cracked, damage exceeds 0.008 inch/.2 mm, or the tail rotor transmission screw holes are elongated.

(2) Replace the mounting clamp if cracks or damage makes it unserviceable.

(3) If necessary, defective rivets may be replaced by AN525-8-10 or MS27039-( ) equivalent structural screws and heavy washers.

Note: Ensure grip length extends through the clamp mount and bulkhead.

UNCONTROLLED COPY WHEN DOWNLOADED OR PRINTED

Visit www.enstromhelicopter.com for instructions to order an original manual and to register for email notification of updates.

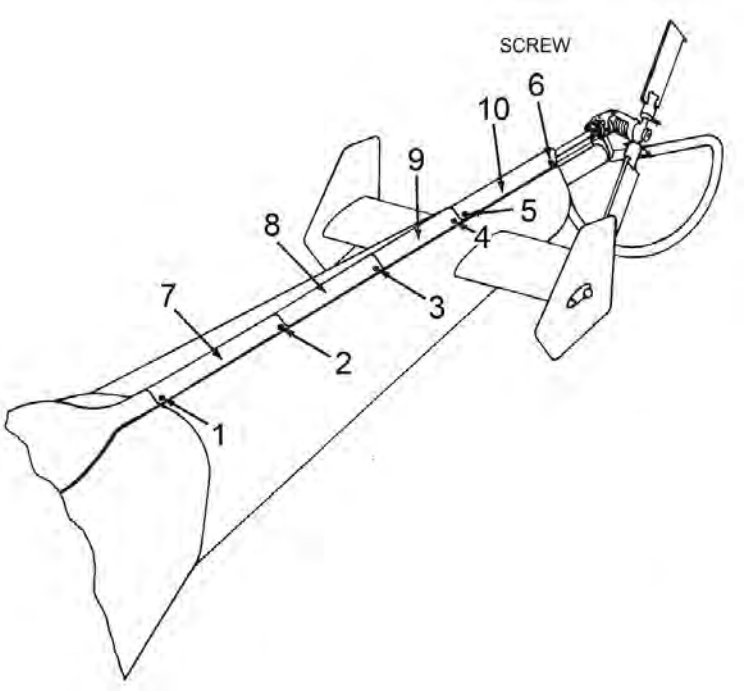

1.	1/4 Turn Fastener	6.	Screw
2.	1/4 Turn Fastener	7.	Cover Section
3.	1/4 Turn Fastener	8.	Cover Section
4.	1/4 Turn Fastener	9.	Cover Section
5.	1/4 Turn Fastener	10.	Cover Section

Figure 8-14.1 Tail Rotor Driveshaft Cover (280 FX)

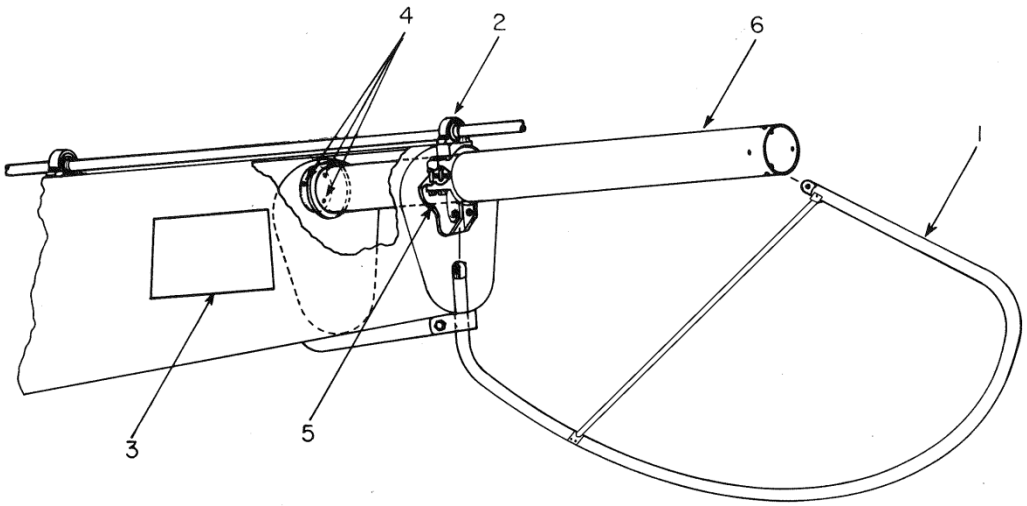

1.	Tail Rotor Guard	4.	Bolt
2.	Aft Pillow Block	5.	Mounting Clamp
3.	Inspection Panel	6.	Extension Tube

Figure 8-15. Extension Tube

UNCONTROLLED COPY WHEN DOWNLOADED OR PRINTED

Visit www.enstromhelicopter.com for instructions to order an original manual and to register for email notification of updates.

D. Extension Tube Installation

(1) Apply Lubriplate 630-AA (MIL-PRF-81322) to the forward end of extension tube (6) and slide tube into tailcone mount. Install bolts (4) through the mount and into extension tube. Tighten bolts.

(2) Install the four attachment bolts into extension tube clamp (5) and torque bolts (50-70 in-lb/5.6-7.9 Nm).

CAUTION: EXCESSIVE TORQUE ON THE EXTENSION TUBE CLAMP BOLTS CAN DEFORM THE EXTENSION TUBE.

(3) Install the attachment bolts in the aft pillow block (2). Tighten bolts and safety wire (MS20995C32).

(4) Install the tail rotor gearbox and the tail rotor assembly as a unit. See Paragraph 10-5 for Gearbox Installation.

(5) Install and secure inspection panel (3).

(6) Connect and secure the tail rotor cables to the control bracket. See Paragraph 10-7, Tail Rotor Cables.

NOTE: Check that the cable tension is 35-40 lb.

(7) Install the left horizontal stabilizer on F-28F model helicopters. See Paragraph 8-14 or 8-16, Stabilizer Installation, as applicable.

(8) Install and secure the tail rotor guard (1) on F-28F and 280FX model helicopters.

(9) Check tail rotor rigging. See Paragraph 10-7, Tail Rotor Assembly.

(10) Inspect all connections for security.

8-14 HORIZONTAL STABILIZERS (F-28F PRE-1986)

A. Stabilizer Removal (See Figure 8-16)

(1) Remove screw and washers from tab (1) in the aft end of the left-hand stabilizer (4).

(2) Remove bolts (2) from the left-hand stabilizer (5) and spar (3).

(3) Slide stabilizer from the spar.

(4) Repeat steps 1 through 3 to remove the right-hand stabilizer (6).

(5) Remove access panel (7) on the left side of tailcone.

(6) Remove bolt (4) which secures the spar (3) to the left side spar fitting and slide the spar from the tailcone. spar should be marked to indicate relative location for correct reinstallation and matching to stabilizer mount holes.

UNCONTROLLED COPY WHEN DOWNLOADED OR PRINTED

Visit www.enstromhelicopter.com for instructions to order an original manual and to register for email notification of updates.

B. Stabilizer Inspection (F-28F Pre-1986)

(1) Inspect the spar and horizontal stabilizer assembly as follows and in accordance with Table 8-2.

NOTE: If either stabilizer requires replacement, it shall be necessary to install a new spar, as stabilizers are match-drilled to spar on installation.

NOTE: Aspects of the following procedure are discussed in AD 88-11-06.

(a) Remove the left and right stabilizer assemblies (P/N 28-20100) from the spar (P/N 28-11222-1).

NOTE: Mark spar position left, right, top, etc. prior to removal so that on reinstallation it will be reposition correctly. Remove the inspection panel on the left side of the tailcone. Remove the bolt securing the spar to the tailcone and remove the tubular spar from the tailcone.

1 Confirm that the tubular spar wall thickness is .049. Replace any tubular spars with a wall thickness of .035 inch with an airworthy .049 inch wall spar.

(b) Visually inspect the attachment fittings for imbedded burrs, fretting and cracks. Pay particular attention to the spar attachment area around all drilled holes. Cracked fittings must be replaced. Cracked sheet metal may be repaired per standard practice.

(c) Inspect the spar by using magnetic particle process, dye penetrant process, or a 10-power or higher magnifying glass to confirm that no cracks exist. Pay particular attention to the spar area around **all** drilled holes. Any cracks found are cause for rejection – replace with an airworthy part. Refer to Figure 8-15.1 for the location of all holes to be inspected.

(d) Conduct a dye penetrant inspection or a close visual inspection by a 10-power or higher magnifying glass of the stabilizer spar trailing edge attachment clips (P/N 28-20106). Any cracks are cause for rejection – replace with an airworthy part.

(e) Corrosion of the tubular spar (particularly in areas of dissimilar metal contact) to depths greater than .005 inch is cause for rejection. Surface corrosion may be cleaned up with 320 grit emery paper. Surface protection of bare areas must be provided by a coat of primer (MIL-PRF-23377).

(f) Reinstall spar in the same relative position to tail cone. If spar is replaced it must be match drilled to tail cone and stabilizers. Remove, deburr all holes, and prep all surfaces with epoxy primer prior to final assembly.

(g) Reinstall the horizontal stabilizer using new airworthy parts, as required.

NOTE: A light coat of LPS 500 or the equivalent on the O.D. of the spar and the I.D. of fittings will aid in reassembly.

UNCONTROLLED COPY WHEN DOWNLOADED OR PRINTED

Visit www.enstromhelicopter.com for instructions to order an original manual and to register for email notification of updates.

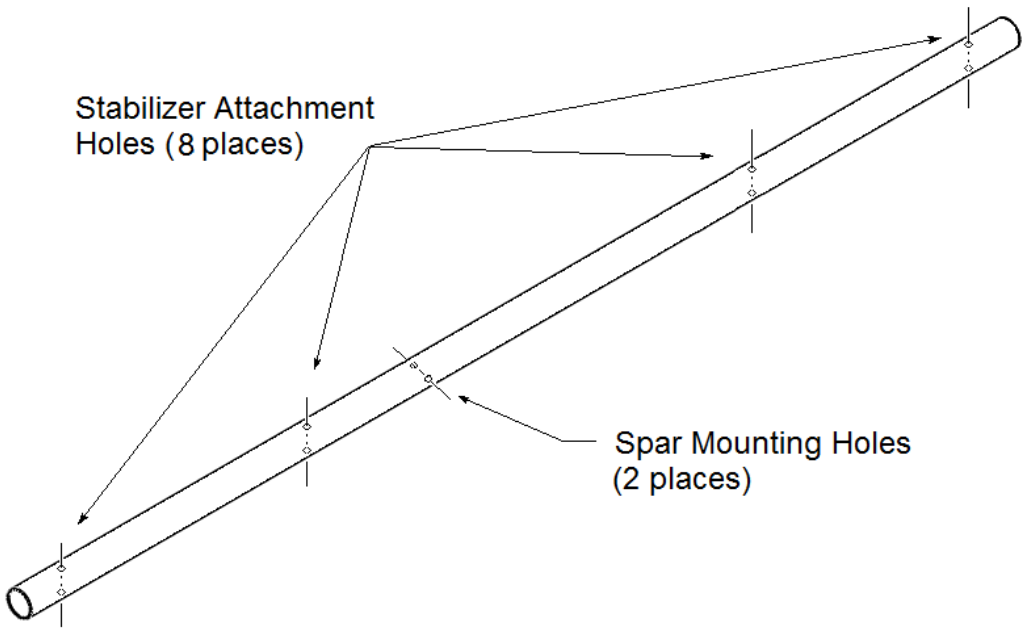

Figure 8-15.1. Stabilizer Spar Inspection – Stabilizer and Mounting Hole Attachment Points

UNCONTROLLED COPY WHEN DOWNLOADED OR PRINTED

Visit www.enstromhelicopter.com for instructions to order an original manual and to register for email notification of updates.

C. Stabilizer Installation (F-28F) (See Figure 8-16)

(1) Apply Lubriplate 630-AA (MIL-PRF-81322) or equivalent to the spar (3) and slide the spar into the tailcone spar mounts.

NOTE: Install the spar with mount hole for the bolt (4) to the left side of the tailcone.

(2) Align bolt hole in the spar with hole in the spar mount located inside the tailcone inspection panel and install bolt (4). Torque bolt.

(3) Install and secure access panel (7) on the left side of the tailcone.

(4) Apply Lubriplate 630-AA (MIL-PRF-81322) or equivalent to the O.D. of the spar extending from each side of the tailcone.

(5) Slide stabilizers (4) and (5) onto the spar (3).

(6) Align bolt holes in the stabilizer to the holes in the spar and install bolts (2) in each stabilizer. Torque bolts.

NOTE: When installing a new stabilizer and spar, proceed as follows:

(a) Lubricate and install spar in the tailcone. Secure with bolt (4).

(b) Lubricate O.D. of the spar and slide the stabilizer in position.

(c) Align pre-drilled pilot holes (#41 drill size) in the stabilizer to pilot holes in the spar.

(d) Drill through stabilizer and spar in the pilot hole positions with a #12 drill (.189 inch diameter).

(e) Install bolts (2) and torque.

(7) Shim between the aft tab (1) and the tailcone with washers and secure with screw.

NOTE: Shim thickness (washers) to equal gap between the inboard end of the stabilizer and tailcone. This dimension may vary from side to side.

8-15 HORIZONTAL STABILIZERS – 280F

A. Stabilizer Removal (280F) (See Figure 8-17)

(1) Remove screw and washers from tab (1) in aft end of stabilizer.

(2) Remove bolts (2) securing stabilizer to spar.

(3) Slide stabilizer off of spar to remove.

(4) Separate strobe wires at quick disconnect points to allow complete removal.

B. Stabilizer Inspection (280F)

(1) Inspect in accordance with Table 8-3.

UNCONTROLLED COPY WHEN DOWNLOADED OR PRINTED

Visit www.enstromhelicopter.com for instructions to order an original manual and to register for email notification of updates.

C. Stabilizer Installation (280F)

(1) Apply Lubriplate 630-AA (MIL-PRF-81322) or equivalent to spar on each side of tailcone.

(2) Attach strobe wires at quick disconnect points and slide stabilizer onto spar.

(3) Align bolt holes in stabilizer to holes in spar and install bolts (2). Torque bolts.

(4) Shim between the aft tab (1) and the tailcone with washers and secure with screw.

NOTE: Shim thickness (washers) to equal gap between inboard end of stabilizer and tailcone. This dimension may vary from side to side.

8-16 HORIZONTAL AND VERTICAL STABILIZERS (F-28F POST-1986; 280FX)

The horizontal stabilizers are aluminum semi-monocoque construction. The vertical endplates are constructed from fiberglass over foam cores, with the anticollision and navigation lights mounted on the outboard side of each end plate. Refer to Figure 8-18.

A. Stabilizer Removal

(1) Remove trailing edge tab screw (6) and washer (7).

(2) Remove one through bolt (8) at the outermost end of the spar (3) and washer (9) and nut (10).

(3) Loosen the two internal wrenching bolts (20) located under the inboard removable skin plugs (21) on the underside of the stabilizer.

(4) Slide stabilizer (4) or (5) about 3 to 4 inches for clearance to disconnect strobe (19) and navigation light wiring.

(5) Remove stabilizer.

(6) Repeat steps (1) through (4) for removal of opposite assembly.

(7) Spar removal (3) open access panel on right side of tail cone aft of spar.

(8) Loosen spar clamp bolts (1) at 2 locations.

(9) Slide spar (3) outward to remove, note spar should be marked to indicate relative location for correct reinstallation and matching to stabilizer mount holes. Mark with ink brush pen only - do not scribe.

B. Stabilizer Inspection

NOTE: If either stabilizer requires replacement, it shall be necessary to install a new spar, as the stabilizers are match-drilled to the spar on installation.

(1) Inspect in accordance with Table 8-4.

UNCONTROLLED COPY WHEN DOWNLOADED OR PRINTED

Visit www.enstromhelicopter.com for instructions to order an original manual and to register for email notification of updates.

C. Stabilizer Installation

(1) Apply Lubriplate 630-AA (MIL-PRF-81322) to the spar (3) and slide the spar into the tail cone spar mounts.

(2) Install the right-hand stabilizer (5) by sliding it on the spar (3) close to the tail cone.

(3) Connect the wiring for the navigation lights and slide the stabilizer completely onto the spar.

(4) Slide the stabilizer on completely aligning the spar and stabilizer holes for the through bolt (8). Install the bolt (8) through the stabilizer and spar and tighten.

(5) Position the spar and the stabilizer until the trailing edge tab fitting is in alignment with the retainer nut plate in the tail cone and the aft tab screw can be installed.

(6) Install screw (6) and washer (7).

(7) Install the spar clamp mount bolts (1) at two places, torque (50-70 in-lb/5.6-7.9 Nm), and safety wire.

(8) Install the screws (20) and washers (26) on underside and tighten.

NOTE: In some cases an additional washer (7) shim may be required under fitting to reduce bending.

(9) Install access panel on tail cone.

(10) Install left hand stabilizer assembly by repeating steps 2, 3, 4, 5, 6, and 8.

(11) Check bolts and screws for proper torque and security. Unless specified otherwise, use standard torque.

D. Endplate Assembly

NOTE: If endplate is damaged and removal is required it can be accomplished as follows:

(1) Remove strobe light assembly, disconnect wiring.

(2) Remove (10) number 10 screws and remove endplate assembly.

(3) Reinstall by reversing steps (2) and (1).

UNCONTROLLED COPY WHEN DOWNLOADED OR PRINTED

Visit www.enstromhelicopter.com for instructions to order an original manual and to register for email notification of updates.

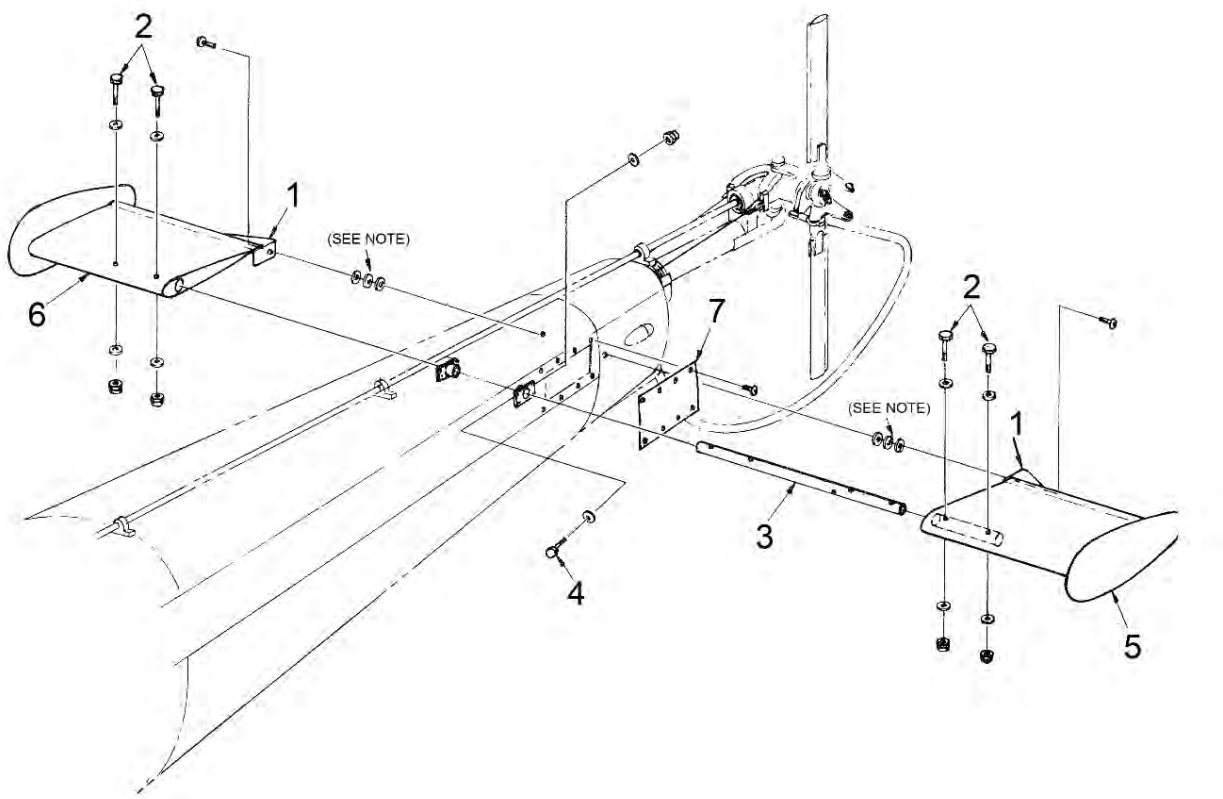

NOTE: Shim with washers to equal gap between stabilizer and tailcone.

1. Tab
2. Bolts
3. Spar
4. Bolt
5. Left Hand Stabilizer
6. Right Hand Stabilizer
7. Access Panel

Figure 8-16. Horizontal Stabilizer Installation (F-28F Pre-1986)

UNCONTROLLED COPY WHEN DOWNLOADED OR PRINTED

Visit www.enstromhelicopter.com for instructions to order an original manual and to register for email notification of updates.

Table 8-2. Horizontal Stabilizer (F-28F Pre 1986, S/N 743 and Prior) – Inspection

P/N	Figure & Item No.	Part Name	Inspection*	Serviceable Limits*	Repair Limits	Repair or Action
28-20100-1 28-20100-2	Fig. 8-16 5 & 6	Horizontal Stabilizer	Stabilizer Bushings 1.130 dia. ± .001	+.001	Not Repairable	Replace bushing
			Bolt holes – .189 dia. ± .005	+.002	Not Repairable	Replace stabilizer
			Stabilizer skin – check for cracks	(See Note)	(See Note)	(See Note)
			Sheet metal (See Note)			
28-11222-15	3	Center Spar	O.D. .1.120-1.130 dia.	-.0005	Not Repairable	Replace spar
			Bolt holes - .191 dia. ± .005	+.002	Not Repairable	Replace spar
			Spar surface – check for nicks, scratches, cracks	None allowed	Not Repairable	Replace spar
			Corrosion Pits	-.005 in depth		Blend out and protect

NOTE: Structural repairs to be made in accordance with AC 43.13-1B. Contact the Enstrom Helicopter Corporation Customer Service for detailed damage and repair limitations.

* All dimensions are in inches.

UNCONTROLLED COPY WHEN DOWNLOADED OR PRINTED

Visit www.enstromhelicopter.com for instructions to order an original manual and to register for email notification of updates.

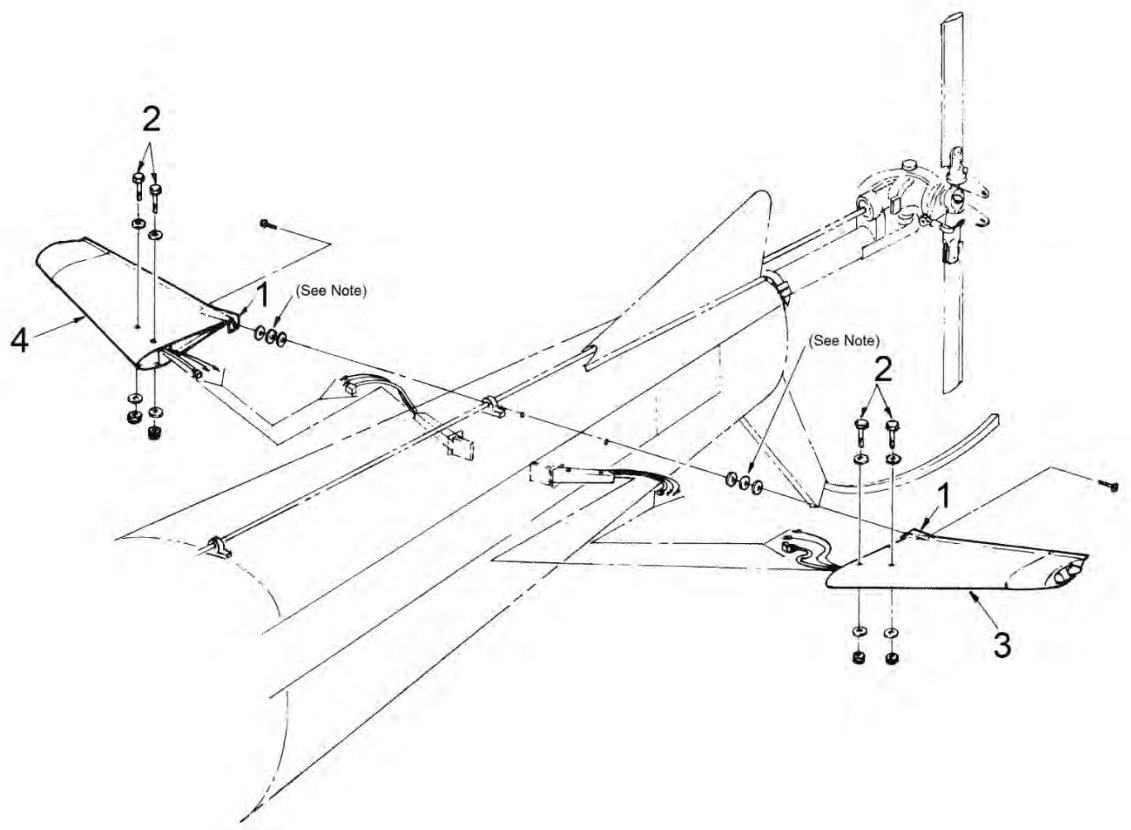

NOTE: Shim with washers to equal gap between stabilizer and tailcone.

1. Tab
2. Bolt
3. Left Hand Stabilizer
4. Right Hand Stabilizer

Figure 8-17. Horizontal Stabilizer Installation (280F)

UNCONTROLLED COPY WHEN DOWNLOADED OR PRINTED

Visit www.enstromhelicopter.com for instructions to order an original manual and to register for email notification of updates.

Table 8-3. Horizontal Stabilizer (280F) – Inspection

P/N	Figure & Item No.	Part Name	Inspection*	Serviceable Limits*	Repair Limits	Repair or Action
280-200003-1 280-200003-2	Fig. 8-17 3 & 4	Horizontal Stabilizer	Bolt holes – .189 dia. ± .005	+.002	Not Repairable	Replace stabilizer
			Stabilizer skin – check for cracks	(See Note)	(See Note)	(See Note)
			Strobe lights – check for cracks in lens cover	None allowed	Not Repairable (See Note)	Replace lens cover
			Sheet metal (See Note)			
280-200000-13 280-200000-14	Not Illustrated	Spar	Bolt holes - .189 dia. ± .005	+.002	Not Repairable	Replace spar
			Spar surface – check for nicks, scratches, cracks	None allowed	Not Repairable	Replace spar

NOTE: Structural repairs to be made in accordance with AC 43.13-1B. Contact the Enstrom Helicopter Corporation Customer Service for detailed damage and repair limitations.

* All dimensions are in inches.

UNCONTROLLED COPY WHEN DOWNLOADED OR PRINTED

Visit www.enstromhelicopter.com for instructions to order an original manual and to register for email notification of updates.

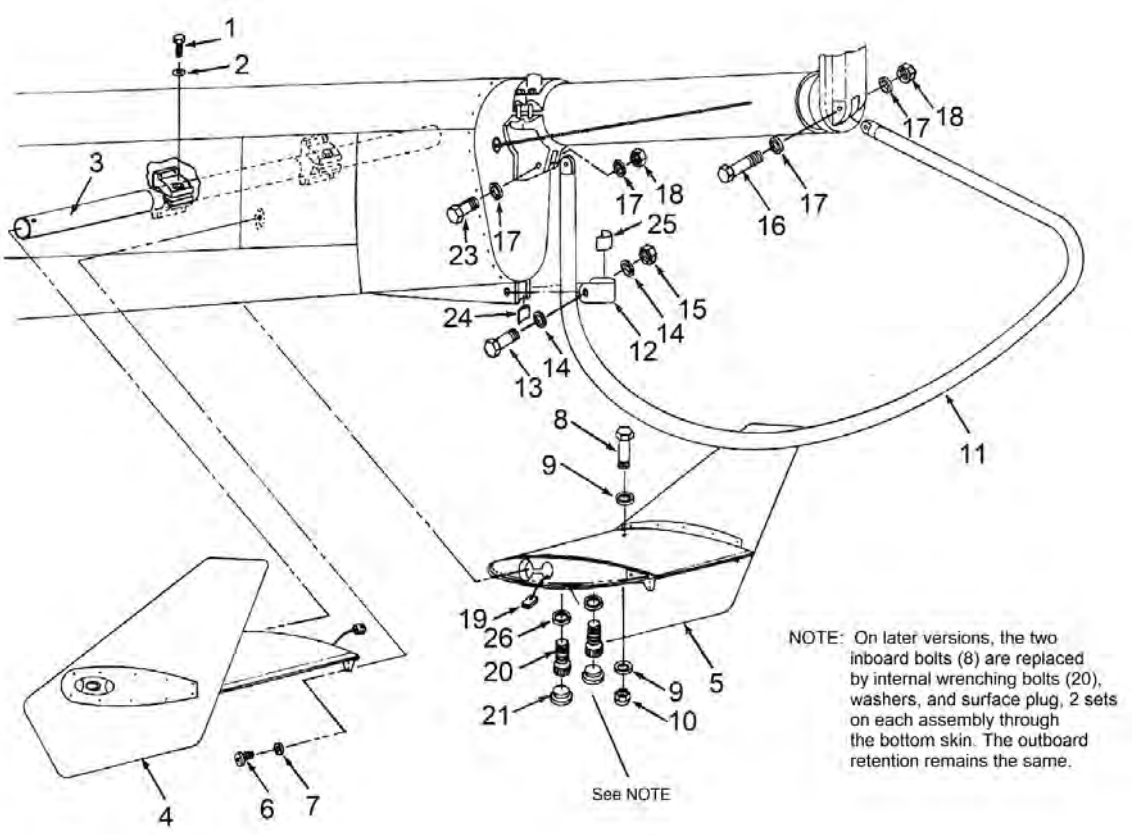

1.	Spar Clamp Bolt	14.	Washer
2.	Washer	15.	Nut
3.	Spar	16.	Bolt
4.	Stabilizer	17.	Washer
5.	Stabilizer	18.	Nut
6.	Trailing Edge Tab Screw	19.	Strobe
7.	Washer	20.	Internal Wrenching Bolt
8.	Bolt	21.	Inboard Removable Skin Plugs
9.	Washer	22.	(Not Used)
10.	Nut	23.	Bolt
11.	Tail Rotor Guard	24.	Pad
12.	Clamp	25.	Pad
13.	Bolt	26.	Washer

Figure 8-18. Tubular Tail Rotor Guard and Vertical Stabilizers (F-28F Post-1986; and 280FX)

UNCONTROLLED COPY WHEN DOWNLOADED OR PRINTED

Visit www.enstromhelicopter.com for instructions to order an original manual and to register for email notification of updates.

Table 8-4. Horizontal Stabilizer (F-28F Post-1986 and 280FX) – Inspection

P/N	Figure & Item No.	Part Name	Inspection*	Serviceable Limits*	Repair Limits	Repair or Action
28-20119-1/-2	Figure 8-18 Item 3	Horizontal Stabilizer (Bolt Mounts)	Stabilizer Bushings 1.130 diam. ± .001	+.001	Not Repairable	Replace bushing
			Bolt holes – .189 dia. ± .005	+.002	Not Repairable	Replace stabilizer
28-20119-3/-4	Figure 8-18	(Bolt Mount and Clamps)	Stabilizer skin – check for cracks	None allowed	Repairable (Note)	Replace stabilizer
			Fitting cracks – (sheet metal)	(See Note)	(See Note)	(See Note) As required, replace fittings
			End Plate Damage	None allowed	Not repairable	Replace Endplate
28-11222-15	Figure 8-18 Item 3	Center Spar	O.D. -1.120/1.130 diam.	-.0005	Not Repairable	Replace spar
			Bolt holes – .191 dia. ± .005	+.002	Not Repairable	Replace spar
			Spar surface – check for nicks, scratches, cracks	None allowed	Not Repairable	Replace spar
			Corrosion Pits	-.005 in depth		Blend out and protect

NOTE: Structural repairs to be made in accordance with AC 43.13-1B. Contact the Enstrom Helicopter Corporation Customer Service for detailed damage and repair limitations.

* All dimensions are in inches.

UNCONTROLLED COPY WHEN DOWNLOADED OR PRINTED

Visit www.enstromhelicopter.com for instructions to order an original manual and to register for email notification of updates.

8-17 AIRSCOOP (280FX)

The airscoop comprises three separate pieces which are fiberglass construction. These include a nose piece which is attached to the cabin roof, a center duct which is mounted to the top of the fuel tanks, and a large airscoop which is mounted on the wraparound cowl behind the trans-mission. This airscoop funnels the cooling air around the transmission and into the cooling fan. The large airscoop blends into the tail rotor driveshaft cover. (Ref. Figure 22-1)

A. Removal – For Access to the Upper Drive System or for Main Rotor Gearbox Removal

(1) Remove side cowl (9) and opposite side panel (10) then remove 5 each screws (4) on the forward section of airscoop (6) and lift airscoop off.

(2) Remove screws (2) 4 places from center duct (7) and nose piece (8).

(3) Remove screws (3) from either side of the center duct and remove.

NOTE: The nose piece (8) need not be removed, the assembly should be inspected for damage and/or missing fasteners.

B. Installation

(1) Install in reverse order of steps (1) through (3).

UNCONTROLLED COPY WHEN DOWNLOADED OR PRINTED

Visit www.enstromhelicopter.com for instructions to order an original manual and to register for email notification of updates.

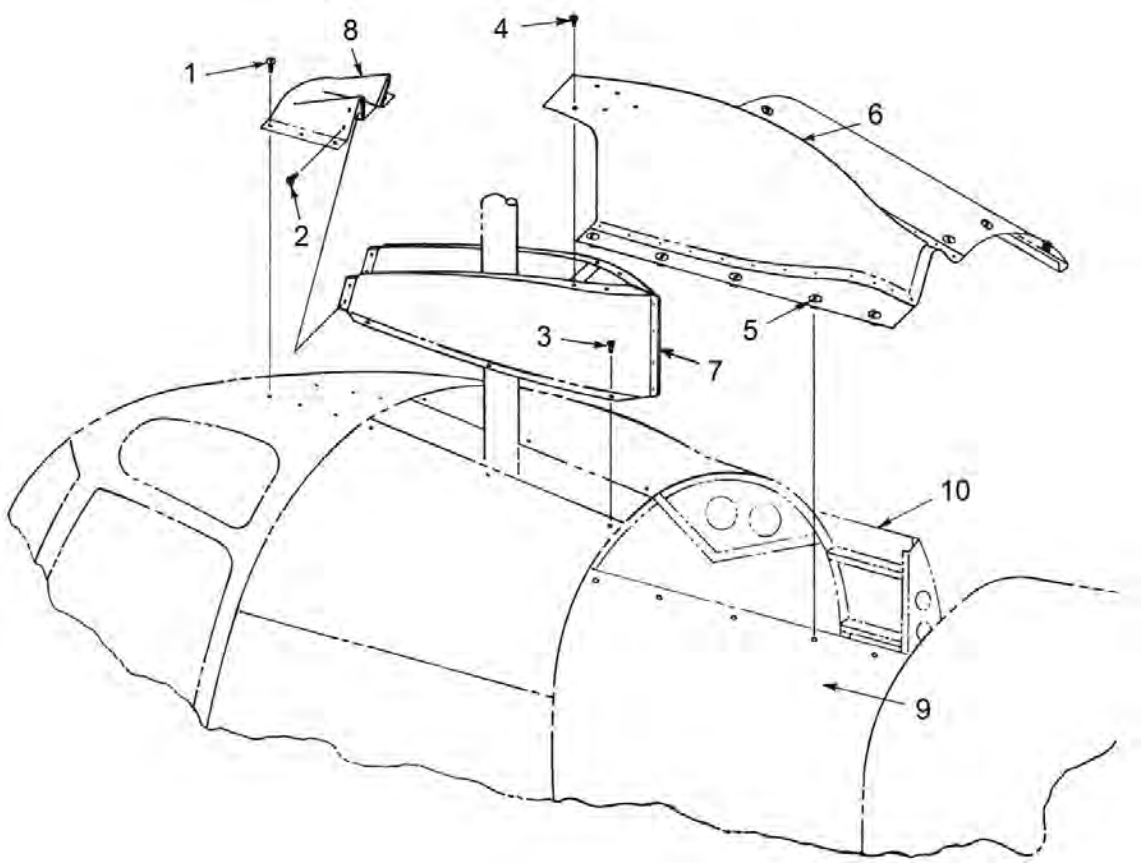

1.	Screw	6.	Airscoop
2.	Screw	7.	Center Duct
3.	Screw	8.	Nose Piece
4.	Screw	9.	Side Cowl
5.	Fastener Stud	10.	Side Panel

Figure 8-19. Three-Piece Airscoop (280FX)

UNCONTROLLED COPY WHEN DOWNLOADED OR PRINTED

Visit www.enstromhelicopter.com for instructions to order an original manual and to register for email notification of updates.

8-18 CABIN CLOSEOUT PANELS (280FX)

Effective S/N 2168 and subsequent, the cabin closeout installation consists of two removable exterior closeout panels mounted to the bottom of the cabin. The panels provide easier access to portions of the cyclic trim system, which avoids having to access the system from above and the need to remove interior components. The left side closeout panel also includes a housing assembly to accommodate the aft landing light. Refer to Figure 8-20.

A. Removal – Left Side Closeout Panel

NOTE: It is not required to remove the LED light assembly when removing the left side closeout panel. Likewise, it is not required to remove the closeout panel if removing the LED light assembly only. If removing the landing light only, accomplish steps A.1 and A.2. If it is not required to remove the landing light, step A.2 may be omitted. Support the panel during removal to prevent damage to the LED light assembly.

(1) Pull the aft landing light circuit breaker (**AFT LDG LTS**, CB46).

(2) If required, remove LED light assembly (8):

(a) Remove four screws (10) and lens clamp (9) from landing light housing (7).

(b) Remove two terminal post screws to disconnect the ground and power wires from the back of the LED light assembly.

(3) Remove twelve screws (2) that attach closeout panel (1) to the cabin shell.

(4) Disconnect wire harness connector P339 (3) from J339.

(5) Remove closeout panel (1).

B. Installation – Left Side Closeout Panel

(1) Connect wire harness P339 (3) to J339.

(2) Install closeout panel (1) to the cabin shell with screws (2).

(3) If required, install LED light assembly (8):

NOTE: Ensure correct wire polarity when connecting the wires.

(a) Secure the ground and power wires to the back of the LED light assembly (8).

(b) Install LED light assembly (8) in landing light housing (7). Ensure the alignment key of the LED light assembly fits the notch in the landing light housing.

(c) Install lens clamp (9) and secure with screws (10).

(4) Push in the aft landing light circuit breaker (**AFT LDG LTS**, CB46).

C. Removal and Installation – Right Side Closeout Panel

(1) Removal and installation of right side closeout panel (12) is accomplished via ten attachment screws (13).

UNCONTROLLED COPY WHEN DOWNLOADED OR PRINTED

Visit www.enstromhelicopter.com for instructions to order an original manual and to register for email notification of updates.

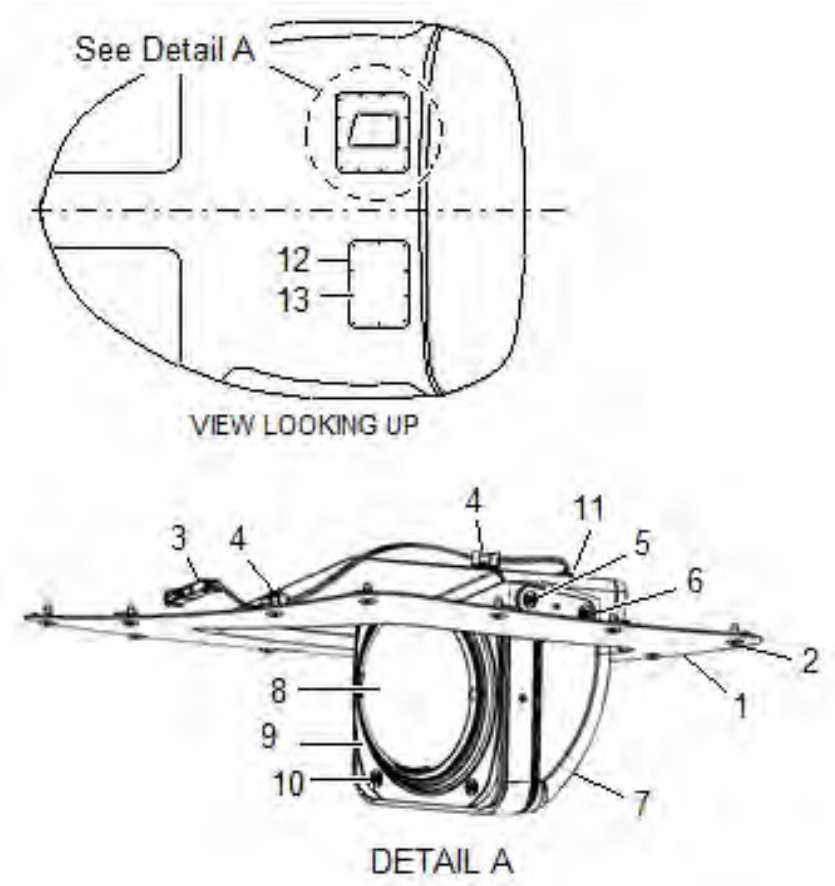

1.	Closeout Panel (Left)	8.	LED Landing Light
2.	Screw	9.	Lens Clamp
3.	Connector (P339)	10.	Screw
4.	Clamp	11.	Grommet
5.	Screw	12.	Closeout Panel (Right)
6.	Screw	13.	Screw
7.	Landing Light Housing		

Figure 8-20. Cabin Closeout Panels and Landing Light Housing (280FX)

UNCONTROLLED COPY WHEN DOWNLOADED OR PRINTED

Visit www.enstromhelicopter.com for instructions to order an original manual and to register for email notification of updates.

INTENTIONALLY LEFT BLANK

UNCONTROLLED COPY WHEN DOWNLOADED OR PRINTED

Visit www.enstromhelicopter.com for instructions to order an original manual and to register for email notification of updates.

SECTION 9

MAIN ROTOR

TABLE OF CONTENTS

Paragraph		Page
9-1	**Main Rotor System**	**MM-9-3**
	A. General	MM-9-3
9-2	**Main Rotor Hub**	**MM-9-3**
	A. Removal	MM-9-3
	B. Disassembly	MM-9-4
	C. Inspection	MM-9-5
	D. Assembly	MM-9-5
	E. Installation	MM-9-10
	F. Preflight Control System Check	MM-9-10
9-3	**Retention Assembly**	**MM-9-16**
	A. Removal	MM-9-16
	B. Disassembly – With Lamiflex Bearing	MM-9-16
	B.1 Disassembly – With Tension-Torsion Strap (STC SR03465CH)	MM-9-21
	C. Inspection	MM-9-22
	D. Assembly – With Lamiflex Bearing	MM-9-22
	D.1 Assembly – With Tension-Torsion Strap (STC SR03465CH)	MM-9-24
	E. Installation (Method 1)	MM-9-26
	F. Installation (Method 2)	MM-9-28
	G. Tension-Torsion Strap Removal	MM-9-29
	H. Tension-Torsion Strap Installation	MM-9-29
9-4	**Universal Block Assembly**	**MM-9-37**
	A. Disassembly	MM-9-37
	B. Inspection	MM-9-37
	C. Assembly	MM-9-37
9-5	**Dampers**	**MM-9-40**
	A. General Information	MM-9-40
	B. Troubleshooting	MM-9-40
	C. Removal	MM-9-40
	D. Disassembly	MM-9-40
	E. Inspection	MM-9-44
	F. Relief Valve Replacement	MM-9-44
	G. Assembly	MM-9-44
	H. Installation	MM-9-48
9-6	**Main Rotor Blades**	**MM-9-55**
9-7	**Description**	**MM-9-55**
9-8	**Removal**	**MM-9-55**
9-9	**Inspection**	**MM-9-58**
9-10	**Repair**	**MM-9-68**
9-11	**Refinishing**	**MM-9-80**
9-12	**Corrosion Prevention**	**MM-9-81**
9-13	**Installation**	**MM-9-81**

UNCONTROLLED COPY WHEN DOWNLOADED OR PRINTED

Visit www.enstromhelicopter.com for instructions to order an original manual and to register for email notification of updates.

INTENTIONALLY LEFT BLANK

UNCONTROLLED COPY WHEN DOWNLOADED OR PRINTED

Visit www.enstromhelicopter.com for instructions to order an original manual and to register for email notification of updates.

9-1 MAIN ROTOR SYSTEM

A. General – Main Rotor System

The main rotor system is a three bladed, high inertia, fully articulated rotor system. The main rotor hub assembly is comprised of two opposing forged aluminum hub plates separated by an aluminum cylindrical spacer. Through bolts hold these items together along with steel spline adapters. Three steel universal blocks are mounted in needle roller bearing units that permit flapping and lead-lag motions. Laminated phenolic pads are used to limit blade travel in both the lead-lag and flapping axes. A thrust nut on the bottom of each universal block transfers vertical blade forces to both hub plates through the universal block. The rotor blades are secured to each universal block on the hub through a forged aluminum grip which is in turn secured to a steel spindle assembly through a retention nut and supporting bearings. Blade feathering loads and centrifugal blade loads are carried by Lamiflex elastomeric bearing assemblies or Tension-Torsion (TT) Straps. Closed circuit hydraulic dampers are incorporated between each flapping pin and the rotor hub to limit the lead-lag velocity of the blades.

NOTE: Lamiflex bearings are discontinued. If the lamiflex bearings must be replaced, the aircraft must be converted to a TT strap retention assembly. Refer to Table 2-2 *Vendor Contact Information* to obtain the TT strap retention assembly installation (STC SR03465CH). Installation instructions and instructions for continued airworthiness publications are provided with the STC. (F-28F S/N 832 and subsequent and 280FX S/N 2147 and subsequent are equipped from the factory with the TT strap retention assembly installation, STC SR03465CH.)

9-2 MAIN ROTOR HUB

A. Removal – Main Rotor Hub

WARNING: USE EXTREME CAUTION WHEN REMOVING THE BLADE AND GRIP ASSEMBLIES TO PREVENT INJURING PERSONNEL.

(1) Remove the main rotor blades (Para. 9-8).

CAUTION: FOREIGN OBJECTS DROPPED DOWN THE MAST MUST BE IMMEDIATELY REMOVED TO PREVENT DAMAGING THE FLIGHT CONTROLS.

(2) Remove bolt (3) securing the pitch change bellcrank to the push-pull rod (6) in the mast (3 places) (Figure 9-1).

NOTE: Install a tie wrap to hold the spacer (7) in the push-pull rod (3 places).

(3) Remove center pivot bolt (4) from the pitch change bellcrank. Pivot the bellcrank from the mounting bracket and allow to hang free on the pitch change link (2) (3 places) (Figure 9-1).

NOTE: Install a tie wrap to hold the spacer (8) in the bellcrank (3 places).

(4) Remove the safeties from the mast nut (27) (Figure 9-2).

WARNING: THE TORQUE OF THE MAST NUT CAN BE DIFFICULT TO BREAK. USE EXTREME CAUTION WHEN REMOVING THE MAST NUT.

UNCONTROLLED COPY WHEN DOWNLOADED OR PRINTED

Visit www.enstromhelicopter.com for instructions to order an original manual and to register for email notification of updates.

(5) Remove mast nut (27) and spacer (26) from the mast using tool T-0197-7 or digital torque multiplier (ATP761). If this is not available, install T-0048 tool and use a 3/4" drive electric impact wrench. If a 3/4" drive electric impact wrench is not available, install one main rotor blade and pull the breaker bar against the blade while using a large (2 kg) hammer to shock the tool (T-0048).

(6) Disconnect the tail rotor drive shaft flex plate at pinion to prevent damage.

(7) Install the hoist sling (T-0011) so the arms are between the pitch arm and the blade retention assembly, over the lead/lag retaining nut, and outboard of the main rotor damper rod-end. The sling arms are long enough to be double wrapped, if preferred (Figure 4-3).

(8) Attach the sling to a lifting device and slowly lift the hub assembly from the mast. The hub must be lifted exactly parallel to the mast. If there are any side loads, the hub will stick on the splines and will not come off. If the hub has been installed for a long period of time, the hub puller (T-0174-1) must be used and the control rods must be removed from inside the mast.

NOTE: It may be helpful to put the left-side wheel down to align the mast vertically prior to lifting the hub assembly from the mast.

(9) Install the hub assembly onto a hub stand.

B. Disassembly – Main Rotor Hub

NOTE: Mark all parts for reassembly in the same respective positions.

(1) Remove bolt (13) to disconnect the pitch link (2) from the pitch arm (1) (3 places) (Figure 9-1).

(2) Remove pitch arm (1) from the blade grip (3 places).

(3) Remove the dampers (Para. 9-5, C).

NOTE: To facilitate tracking, mark the hub adapter locations relative to the grip assemblies such that all blade grips and pitch change links are installed in the same location upon reassembly of the main rotor hub. A reused main rotor shaft may have previous markings.

(4) Remove the retention assemblies (Para. 9-3, A).

(5) Remove bolts (1) and (2) from the bellcrank brackets (3) and remove the brackets (Figure 9-2).

(6) Remove dust cover (4).

(7) Bend locking tabs (6) out of the recesses in the retaining nuts (5). Install tool (T-0051-1 or T-0051-3) on the nuts and remove the nuts and the washers.

(8) Turn the hub assembly over and remove locking keys (10) from the retaining nuts (9).

UNCONTROLLED COPY WHEN DOWNLOADED OR PRINTED

Visit www.enstromhelicopter.com for instructions to order an original manual and to register for email notification of updates.

(9) Using tool T-0003, remove the nuts, shims (8), and DU washers (7).

(10) Turn the hub assembly over and remove the hardware (11) from the center hub adapter.

(11) Remove upper and lower spline adapters (12) and (18) by tapping them from the hub plates with a nylon drift.

(12) Remove dowel pins (13) from the hub plates (14) and (17) and the center spacer (16) by tapping them through with an aluminum drift.

(13) Remove grease fittings (19) from the hub plates (6 places).

WARNING: USE PROTECTIVE GLOVES WHEN HANDLING HEATED PARTS.

NOTE: Heating the assembly can be facilitated by using an oven.

(14) Heat the upper hub plate to approximately 250°F/121°C and lift the hub plate from the universal blocks (U-block) (15). Tap with a plastic mallet if necessary.

(15) Heat the lower hub plate to approximately 250°F/121°C and tap the universal blocks from the hub plate.

C. Inspection – Main Rotor Hub

(1) Refer to Table 9-1 for detailed inspection requirements.

D. Assembly – Main Rotor Hub (Figure 9-2)

WARNING: USE PROTECTIVE GLOVES WHEN HANDLING HEATED PARTS.

NOTE: The upper hub plate has helicoil inserts in the outer bosses for the bellcrank mount brackets. The lower hub plate bosses are solid.

(1) Heat upper hub plate (14) and the lower hub plate (17) to approximately 250°F/121°C.

(2) Place the lower hub plate on 2" X 4" wood blocks. Lubricate the bearing bores with MIL-G-25537.

NOTE: Ensure the DU washers have been installed on the U-blocks with the chamfered side facing the hub plates. The DU washers must be seated in the recessed area of the hub plate. Lubricate (MIL-G-25537) the DU washers before installation in the hub plates.

UNCONTROLLED COPY WHEN DOWNLOADED OR PRINTED

Visit www.enstromhelicopter.com for instructions to order an original manual and to register for email notification of updates.

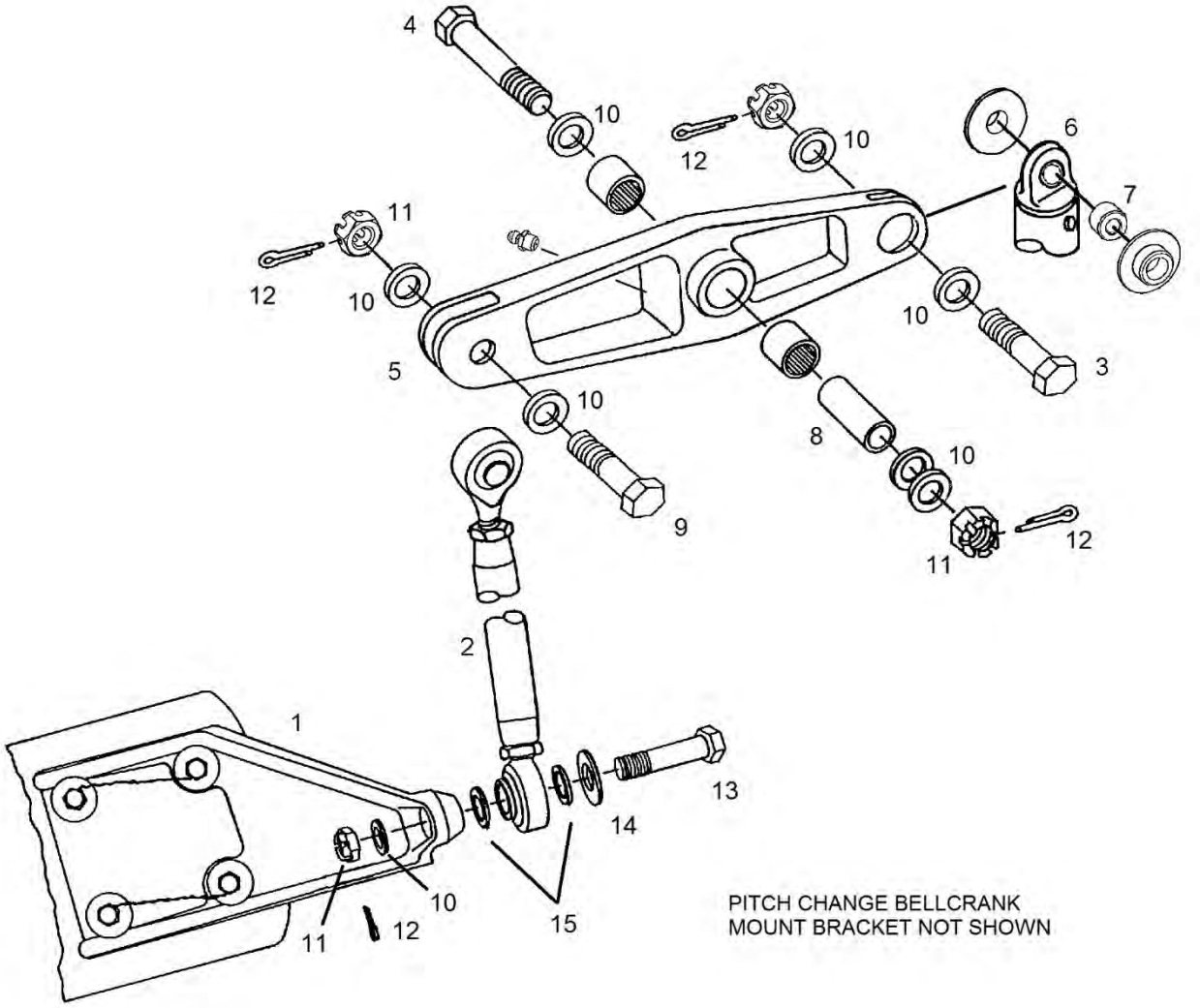

1. Pitch Arm
2. Pitch Change Link
3. Bolt
4. Bolt
5. Pitch Change Bellcrank
6. Push-Pull Rod Assembly
7. Spacer
8. Spacer
9. Bolt
10. Washer
11. Nut
12. Cotter Pin
13. Bolt
14. Washer (P/N ECD050-19)
15. Spacer

Figure 9-1. Pitch Change Bellcrank and Pitch Link Installation

UNCONTROLLED COPY WHEN DOWNLOADED OR PRINTED

Visit www.enstromhelicopter.com for instructions to order an original manual and to register for email notification of updates.

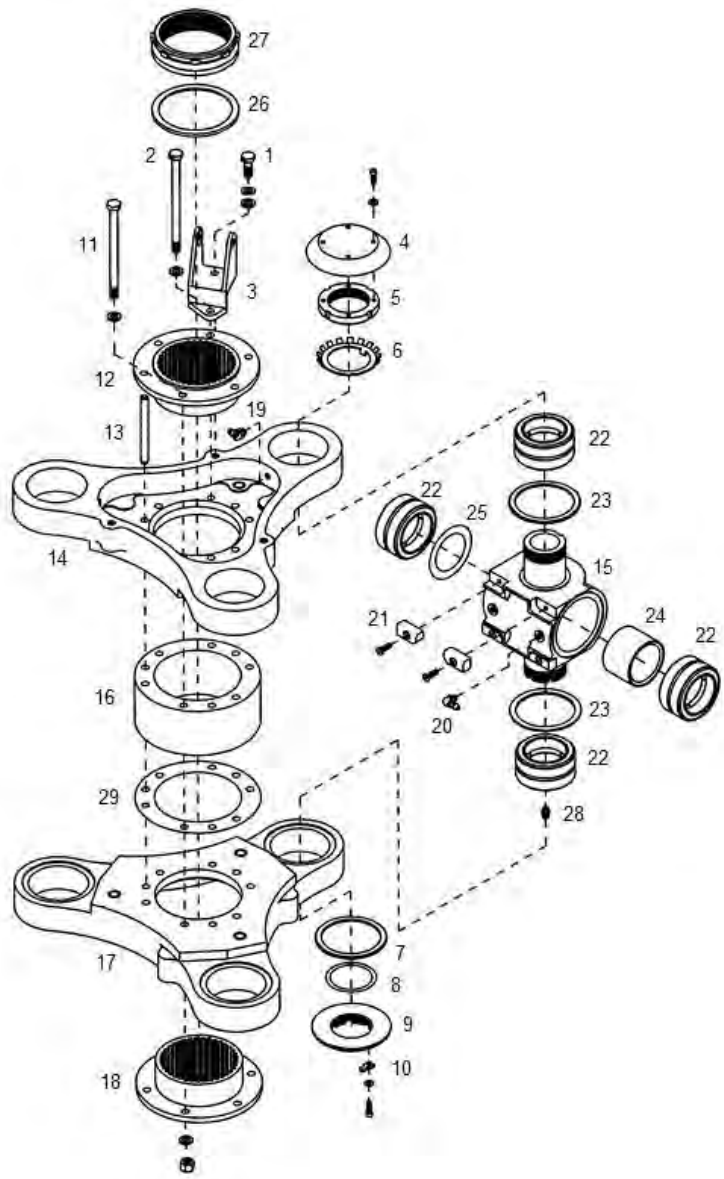

1.	Bolt	11.	Bolt	21.	Stop Pad
2.	Bolt	12.	Upper Spline Adapter	22.	Bearing
3.	Bracket	13.	Dowel Pin	23.	DU Washer
4.	Dust Cover	14.	Upper Hub Plate	24.	Spacer
5.	Retaining Nut	15.	Universal Block	25.	Shim
6.	Lock Washer	16.	Center Spacer	26.	Hub Spacer
7.	DU Washer	17.	Lower Hub Plate	27.	Retaining Nut
8.	Shim	18.	Lower Spline Adapter	28.	Grease Fitting
9.	Retaining Nut	19.	Grease Fitting	29.	Shim
10.	Lock Key	20.	Grease Fitting		

Figure 9-2. Main Rotor Hub Assembly

UNCONTROLLED COPY WHEN DOWNLOADED OR PRINTED

Visit www.enstromhelicopter.com for instructions to order an original manual and to register for email notification of updates.

(3) If required, assemble the U-block assembly (Para. 9-4, C).

(4) Install U-block assemblies (15) into the bearing bore of the hub plate with the threaded notched end of the U-blocks down (3 places).

(5) Place spacer (16) on the lower hub plate (17) and align the bolt holes.

(6) Lubricate (MIL-G-25537) the bearing bores of the upper hub plate (14) and install the upper hub plate onto the U-blocks.

NOTE: The dowel pins must be installed until slightly recessed from face of hub plate surface.

(7) Lubricate (MIL-G-25537) dowel pins (13) and tap pins into the center hole of the 3-hole bolt pattern (3 places).

NOTE: The upper spline adapter has the wider flat surface on the top side of the splines while the lower adapter has a rib extending from the lower end of the splines.

CAUTION: WHEN INSTALLING SPLINE ADAPTERS, THE PHASING MARKS ON TOP OF THE SPLINES MUST ALIGN WITH ONE OF THE BELLCRANK MOUNT BRACKETS (3). USING A FELT MARKER, MARK A LINE ON OUTBOARD EDGE OF HUB PLATE IN LINE WITH SPLINE PHASING MARKS TO AID IN THE ALIGNMENT WHEN INSTALLING LOWER SPLINE ADAPTER.

(8) Insert bolts in upper spline adapter (12) as guides and install spline adapter into upper hub plate (14).

NOTE: To distinguish between spline adapters, the upper spline adapter (12) has the wider flat surface on top side of splines while the lower spline adapter has a rib extending from lower end of spline.

(9) Carefully turn the hub assembly over and position on wood blocks.

(10) Install lower spline adapter (18) (aligning the phasing mark with the upper adapter phasing mark) into lower hub plate (17).

(11) Install center hub bolts (11) in the holes adjacent to the bellcrank bracket mount holes and install washers and nuts. Torque bolts.

(12) Install bellcrank brackets (3) and secure with bolts (1) and (2). Torque bolts (1) and safety with 0.032 safety wire. Torque bolts (2).

(13) To set rotational drag of U-blocks (15), proceed as follows:

(a) Place the hub assembly on a stand with lower end of U-blocks up.

UNCONTROLLED COPY WHEN DOWNLOADED OR PRINTED

Visit www.enstromhelicopter.com for instructions to order an original manual and to register for email notification of updates.

(b) Lubricate (MIL-G-25537) DU washer (7) and install into recess of hub plate with chamfer in board toward hub plate.

(c) Install shims (8) (approximately 0.025 inch/0.6 mm thick) and lower U-block nut (9). Using tool T-0003, torque nut to 50 ft-lb/67.8 Nm.

(d) Rotate the U-block to one of the stops and install a hinge pin partially into bearing until it extends 4.75 in/12.1 cm.

(e) Attach a spring scale to the head of hinge pin and pull to check the drag of the U-block.

NOTE: Drag tolerance with nut torqued is 4 to 10 lb/1.8 to 4.5 kg.

(f) Add or subtract shims (8) until the proper drag torque is obtained.

NOTE: Nut (9) must be torqued before checking drag.

(g) Place locking key (10) into the slot of nut (9) aligned with the notch in the U-block and secure the key with screw.

(h) Adjust the drag of all three U-blocks following steps (b) through (g).

(14) Turn the hub assembly over on the stand.

(15) Install upper U-block nuts (5) as follows:

(a) Install lockwasher (6) and nut (5) on U-block.

(b) Torque nut (5) to 20 ft-lb/27.1 Nm using tool T-0051-3.

(c) Using a plastic mallet, tap down on top of nut and re-torque to seat the upper bearing.

NOTE: Repeat step (c) until nut (5) will not move when being torqued to 20 ft-lb/27.1 Nm.

(d) Bend tab from lock washer (6) into the slot in nut (5) to secure the nut after torque is completed.

(e) Install dust cover (4) on the nut and secure with screws and washers.

(f) Repeat steps (a) through (e) on each U-block.

(16) Install grease fittings (19) into upper and lower hub plates (6 places).

(17) Install the retention assemblies (Para. 9-3, E).

(18) Install the damper assemblies (Para. 9-5, H).

(19) Install the pitch arms to the blade grips.

(20) Install the pitch link (2) to the pitch arm (1) with bolt (13) and hardware (3 places) (Figure 9-1). Torque and cotter pin.

UNCONTROLLED COPY WHEN DOWNLOADED OR PRINTED

Visit www.enstromhelicopter.com for instructions to order an original manual and to register for email notification of updates.

E. Installation – Main Rotor Hub (Figure 9-1, Figure 9-2)

WARNING: USE EXTREME CAUTION WHEN INSTALLING THE BLADE AND GRIP ASSEMBLIES TO PREVENT FROM INJURING PERSONNEL.

(1) Locate the spline with phasing mark at top of main rotor shaft and mark it with a black felt marker for alignment ease. Apply a lubricant (MIL-PRF-81322) to the rest of the rotor shaft splines.

(2) Using sling T-0011 on main rotor hub assembly, carefully lower hub onto main rotor shaft while aligning the phasing marks on lower spline adaptor to phasing mark of rotor shaft spline. Remove sling.

CAUTION: WHEN HUB INSTALLED, THE ROTOR SHAFT SPLINE PHASING MARK MUST BE LOCATED BETWEEN UPPER SPLINE ADAPTER PHASING MARKS. CHECK THIS BEFORE INSTALLING MAST NUT AND WASHER.

(3) Install mast spacer (26) with chamfered side down toward splines.

(4) Install mast nut (27) and torque to 400 ft-lb/542.3 Nm using Digital Mast Torque Multiplier P/N ATP761 or tool T-0048. Lockwire (.041) the mast nut (three places).

(5) Remove the tie wrap from the spacer (7) in the control rod (6) and connect the control rod (6) and spacer (7) with the bolt (3), nut, and washers.

(a) Torque the nut. Ensure that the bellcrank will pivot on the control rod without resistance.

NOTE: Resistance may be a result of protruding bronze bushings that cause drag when the hardware is torqued. File the bushings until the applied torque does not cause drag when the walking beam is pivoted at the control rod attachment point.

(6) Remove the tie wrap from the spacer (8) in the bellcrank (5) and connect the spacer (8) with the bolt (4), nut, and washers.

(a) Torque the nut. Ensure that the bellcrank will pivot on the control rod without resistance.

(7) Install the main rotor blade (Para. 9-13).

(8) Inspect all connections for security and proceed to the Preflight Control System check (Para. 9-2, F).

F. Preflight Control System Check

NOTE: Whenever a helicopter has had work performed to the flight controls, it is recommended that a flight test be conducted before returning the helicopter to service.

(1) Check the blade track (Para. 12-2).

(2) Perform a complete Flight Test Procedure (Para. 12-13).

UNCONTROLLED COPY WHEN DOWNLOADED OR PRINTED

Visit www.enstromhelicopter.com for instructions to order an original manual and to register for email notification of updates.

Table 9-1. Inspection Requirements – Main Rotor Hub Assembly

Part No.	Figure 9-2 Item #	Part Name	Inspection*	Serviceable Limits*	Repair Limits	Repair or Action
28-14202-1	3	Bellcrank bracket	Deformed or cracked ears	None Allowed	Not Repairable	Replace Bracket
			Security of bushings in bracket – press fit	No Play Allowed	Not Repairable	Replace Bracket
			Nicks, scratches, or corrosion	None Allowed	≤ .010 Deep	Blend and Polish Smooth
28-14227-1	5	Nut	Threads (rolled or missing)	None Allowed	Not Repairable	Replace Nut
W-09-1	6	Lockwasher	Tangs (deformed or cracked)	None Allowed	Not Repairable	Replace Lockwasher
28-14236-1	7	DU washer	Flatness	.005	Not Repairable	Replace Washer
			Thickness .090 to .093	-.003	Not Repairable	Replace Washer
28-14256-1	9	Nut	Threads (rolled or missing)	None Allowed	Not Repairable	Replace Nut
28-14224-1	12 (& 18)	Spline Adaptors	Inboard face of adapter perpendicular to O.D.	+.0025 FIM	Not Repairable	Replace Adapter
			O.D. 3.6235 to 3.6245	-.0005	Not Repairable	Replace Adapter
			Spline pitting	.003 Deep	Not Repairable	Replace Adapter
			Spline corrosion	None Allowed	Surface Corrosion	Wire Brush to Remove
			Spline wear	.0015 on Side	Not Repairable	Replace Adapter

UNCONTROLLED COPY WHEN DOWNLOADED OR PRINTED

Visit www.enstromhelicopter.com for instructions to order an original manual and to register for email notification of updates.

Table 9-1. Inspection Requirements – Main Rotor Hub Assembly

Part No.	Figure 9-2 Item #	Part Name	Inspection*	Serviceable Limits*	Repair Limits	Repair or Action
28-14224-1	12	Spline Adaptor (continued)	Nicks, scratches, or corrosion	.010 Deep	≤ .010 Deep	Blend and Polish Smooth
			Cracks	None Allowed	Not Repairable	Replace Adapter
28-14280-5	14	Upper Hub	Spline Adapter Bore 3.624 to 3.625 diameter	+.0005	Not Repairable	Replace Upper Hub
			U Block Bearing Bore 2.4986 to 2.4994	+.0008	Not Repairable	Replace Upper Hub
			Recesses for the DU washers parallel to the upper surface within .001	+.0005	Not Repairable	Replace Upper Hub
			Damper bolt bushings diameter .4995 to .5000	+.0005	Not Repairable	Replace Bushing
			Threads for bellcrank brackets (crossed or missing).	None Allowed	Not Repairable	Replace Helicoil
			Nicks, scratches, or corrosion	None Allowed	≤ .010 Deep	Blend and Polish Out Smooth
			Cracks	None Allowed	Not Repairable	Replace Upper Hub

UNCONTROLLED COPY WHEN DOWNLOADED OR PRINTED

Visit www.enstromhelicopter.com for instructions to order an original manual and to register for email notification of updates.

Table 9-1. Inspection Requirements – Main Rotor Hub Assembly

Part No.	Figure 9-2 Item #	Part Name	Inspection*	Serviceable Limits*	Repair Limits	Repair or Action
28-14117-11	15	U-Block	Bore Dia. 2.4996 to 2.4998	+.0002	Not Repairable	Replace U-Block
			Bearing Surface O.D. 1.7492 to 1.7498	-.0002	Not Repairable	Replace U-Block
			Bearing Surfaces concentric	.001 FIM	Not Repairable	Replace U-Block
			Threads (crossed or missing)	None Allowed	Not Repairable	Replace U-Block
			Nicks, scratches, or corrosion	None allowed at the radius of the bearing spindle	≤ .030 deep	Blend and polish out smooth
			Cracks	None Allowed	Not Repairable	Replace U-Block
28-14223-1	16	Spacer	Dowel Hole Dia. .3125	+.0005	Not Repairable	Replace Spacer
			Bolt Hole Dia. .313 to .318	+.002	Not Repairable	Replace Spacer
			Nicks, scratches, or corrosion	.030 Deep	≤ .010 Deep	Replace Spacer
			Cracks	None Allowed	Not Repairable	Replace Spacer
28-14281-5	17	Lower Hub	Spline Adapter Bore 3.624 to 3.625	+.0005	Not Repairable	Replace Lower Hub
			U Block Bearing Bores 2.4986 to 2.4994	+.0008	Not Repairable	Replace Lower Hub

UNCONTROLLED COPY WHEN DOWNLOADED OR PRINTED

Visit www.enstromhelicopter.com for instructions to order an original manual and to register for email notification of updates.

Table 9-1. Inspection Requirements – Main Rotor Hub Assembly

Part No.	Figure 9-2 Item #	Part Name	Inspection*	Serviceable Limits*	Repair Limits	Repair or Action
28-14281-5	17	Lower Hub (continued)	Recesses for the DU washers parallel to the lower surface within .001	+.0005	Not Repairable	Replace Lower Hub
			Damper Bolt Bushing Dia. .4995 to .5000	+.0005	Not Repairable	Replace Bushing
			Nicks, scratches, or corrosion	None Allowed	≤ 0.10 Deep	Blend and Polish Out Smooth
			Cracks	None Allowed	Not Repairable	Replace Lower Hub
28-14224-3	18	Spline Adaptor	Inboard face of adapter perpendicular to O.D.	+.0025 FIM	Not Repairable	Replace Adapter
			O.D. 3.6235 to 3.6245	-.0005	Not Repairable	Replace Adapter
			Spline pitting	.003 Deep	Not Repairable	Replace Adapter
			Spline corrosion	None Allowed	Surface Corrosion	Wire Brush to Remove
			Spline wear	.0015 on Side	Not Repairable	Replace Adapter
			Nicks, scratches, or corrosion	.010 Deep	≤ .010 Deep	Blend and Polish Smooth
			Cracks	None Allowed	Not Repairable	Replace Adapter
28-14251-1, -2	21	Stop Pad	Visual damage (cracks, chips, etc.)	None Allowed	Not Repairable	Replace Stop

UNCONTROLLED COPY WHEN DOWNLOADED OR PRINTED

Visit www.enstromhelicopter.com for instructions to order an original manual and to register for email notification of updates.

Table 9-1. Inspection Requirements – Main Rotor Hub Assembly

Part No.	Figure 9-2 Item #	Part Name	Inspection*	Serviceable Limits*	Repair Limits	Repair or Action
ECD092-1	22	Bearing	O.D. 2.4994 to 2.5000	No Tolerance Allowed	Not Repairable	Replace Bearing
			I.D. 1.7493 to 1.7500	No Tolerance Allowed	Not Repairable	Replace Bearing
			Ratcheting or roughness	None Allowed	Not Repairable	Replace Bearing
28-13236-1	23	DU Washer	Flatness	.005	Not Repairable	Replace Washer
			Thickness .090 to.093	-.003	Not Repairable	Replace Washer
28-14235-1	24	Spacer	Ends parallel	.0015 FIM	Not repairable	Replace Spacer
P/N	**Figure 9-3 Item #**	**Part Name**	**Inspection***	**Serviceable Limits***	**Repair Limits**	**Repair or Action**
28-14233-2	3	Flapping Pin	Threads (crossed or missing)	None Allowed	Not Repairable	Replace Pin
			Damper bolt hole Dia. .5005 to .5015	+.0015	Not Repairable	Replace Pin
			O.D. 1.7486 to 1.7492	-.0005	Not Repairable	Replace Pin
			Longitudinal scores or scratches	.011 deep	≤ .011 deep	Blend and polish out smooth
			Radial Scores	None Allowed	Not Repairable	Replace Pin
28-14233-3	3	Flapping Pin	O.D. 1.7483 to 1.7493	-.0005	Not Repairable	Replace Pin
			Inspect the remainder of the flapping pin following the inspection criteria listed for the -2 flapping pin.			

* All dimensions are in inches.

UNCONTROLLED COPY WHEN DOWNLOADED OR PRINTED

Visit www.enstromhelicopter.com for instructions to order an original manual and to register for email notification of updates.

9-3 RETENTION ASSEMBLY

NOTE: Lamiflex bearings are discontinued. If the Lamiflex bearings must be replaced, the aircraft must be converted to a TT strap retention assembly. Refer to Table 2-2 *Vendor Contact Information* to obtain the TT strap retention assembly installation (STC SR03465CH). Installation instructions and instructions for continued airworthiness publications are provided with the STC. (F-28F S/N 832 and subsequent and 280FX S/N 2147 and subsequent are equipped from the factory with the TT strap retention assembly installation, STC SR03465CH.)

A. Removal – Retention Assembly (Figure 9-3)

(1) Remove the main rotor blade (Para. 9-8) from the retention assembly if the hub assembly is installed on the aircraft.

(2) Remove the main rotor dampers (Para. 9-5, C).

(3) Disconnect pitch change link (2) from the pitch change bellcrank (5) (Figure 9-1).

(4) Bend the lockwasher tab (4) away from the hinge pin retaining nut (5). Remove the nut using tool (T-0051-1 or T-0051-3).

(5) Lift the retention assembly off of the down stop and rotate the grip slightly so that the hinge pin (3) will clear the pitch arm. Slide or tap the hinge pin (3) from the retention assembly and remove the retention assembly from the hub.

(6) Remove DU washers (1) and shims (2), if any are installed, from both recesses in the universal block. Note the shim position(s) and retain the order for reassembly.

NOTE: If shims are installed behind DU washers, remove, note position, and save for reassembly.

B. Disassembly – Retention Assembly with Lamiflex Bearing (Figure 9-4)

NOTE: The blade grip, lamiflex bearing, and lamiflex bearing shims can be removed with the retention assembly installed on the hub assembly.

(1) Remove the main rotor blade (Para. 9-8) and disconnect the pitch change link (2) from the pitch change bellcrank (5) (Figure 9-1) if the retention assembly is installed on the hub assembly.

CAUTION: USE BRASS PROTECTOR PLATES ON THE VISE JAWS TO PREVENT DAMAGE TO SPINDLE SURFACE

(2) Clamp the retention assembly in a vise in a vertical position.

(3) Remove hardware from the dust cover (18) and remove cover. Inspect for brass residue (chips or flakes) from the lamiflex bearing.

(4) Remove screw and inboard grease fitting.

(5) Remove cotter pin (17) from nut (16).

(6) Install tool T-0013 on nut (16) and remove nut.

UNCONTROLLED COPY WHEN DOWNLOADED OR PRINTED

Visit www.enstromhelicopter.com for instructions to order an original manual and to register for email notification of updates.

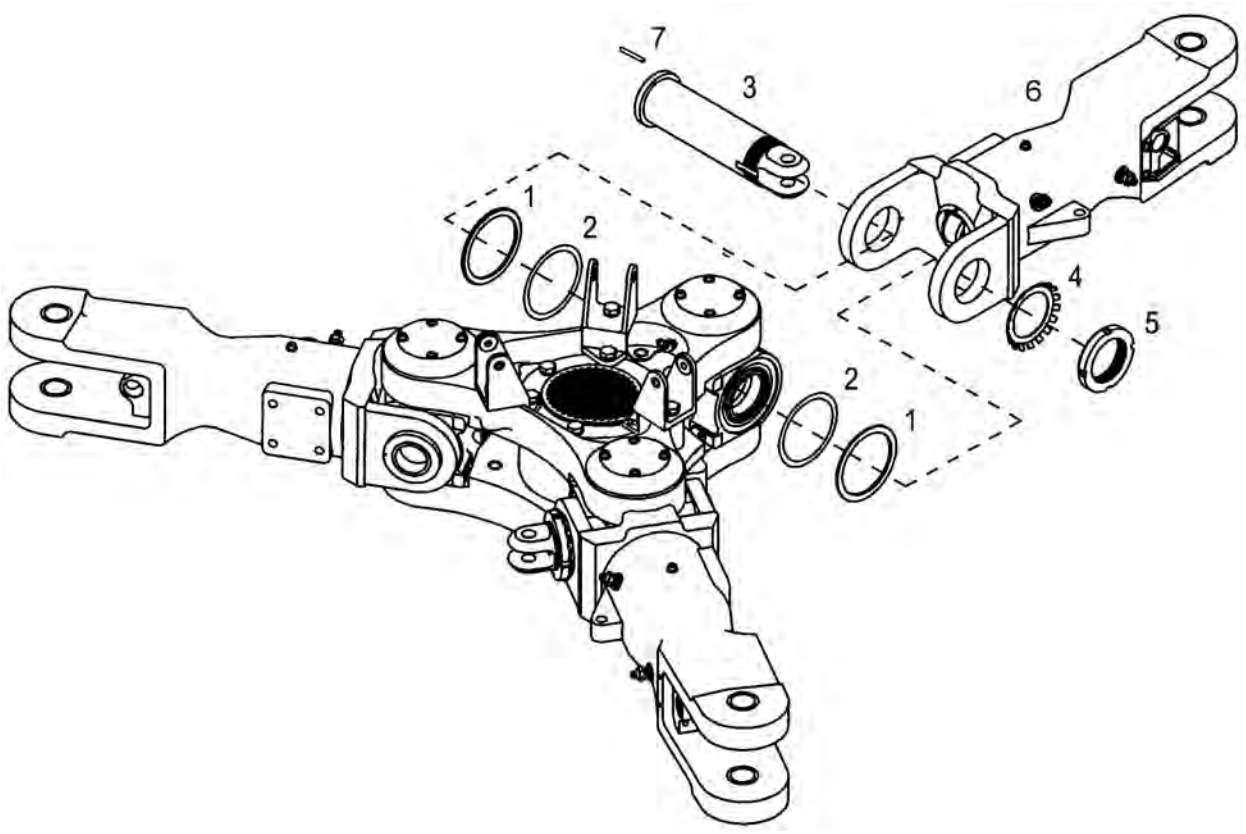

NOTE: One shim P/N 28-14019-5 (Item 2) is installed, either the left or right side of the universal block.

1. DU Washer
2. Shim
3. Flapping Hinge Pin
4. Lock Washer
5. Nut
6. Retention Assembly
7. Pin

Figure 9-3. Retention Assembly Installation

UNCONTROLLED COPY WHEN DOWNLOADED OR PRINTED

Visit www.enstromhelicopter.com for instructions to order an original manual and to register for email notification of updates.

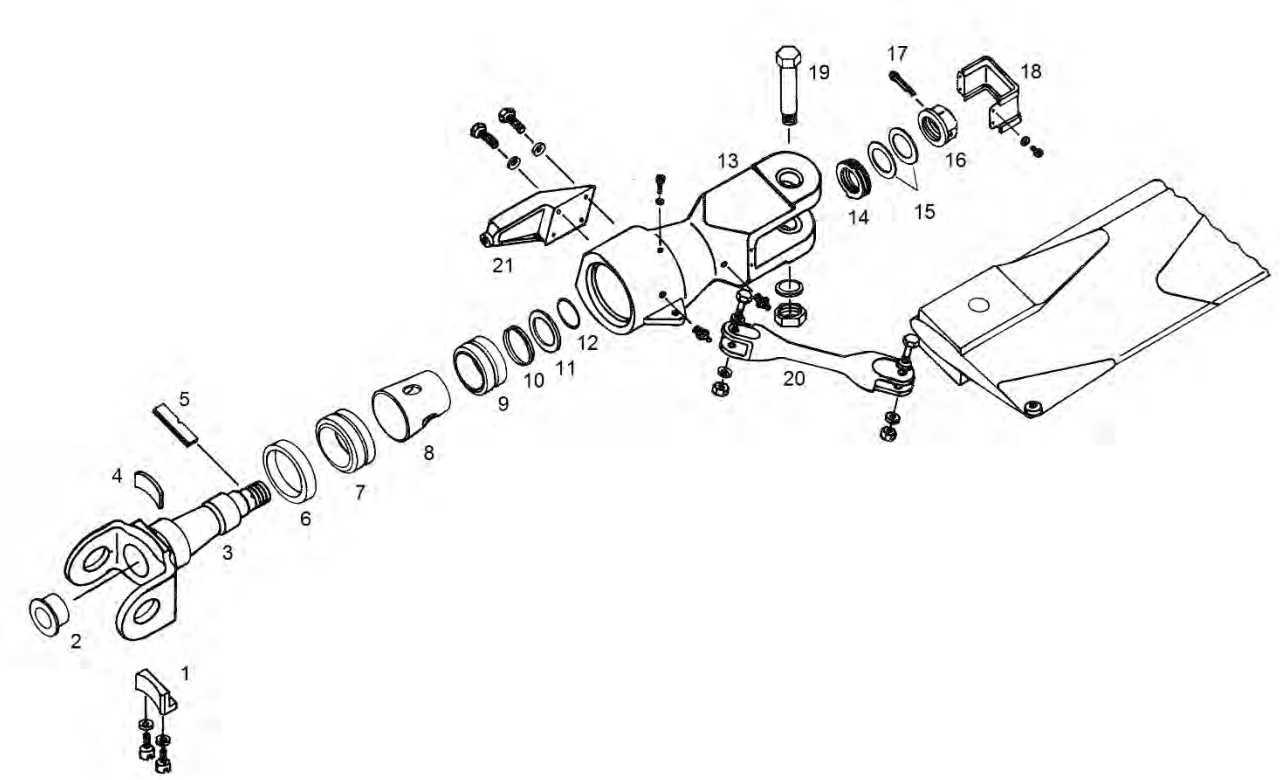

1.	Droop Stop	12.	O-Ring
2.	Dust Cap	13.	Blade Grip
3.	Spindle	14.	Lamiflex Bearing
4.	Flapping Stop	15.	Shim
5.	Nylatron Strap	16	Retaining Nut
6.	Seal	17.	Cotter Pin
7.	Bearing	18.	Dust Cover
8.	Spacer	19.	Blade Retention Pin
9.	Bearing	20.	Drag Link
10.	Retaining Ring	21.	Pitch Arm
11.	DU Washer		

Sheet 1 of 2
Lamiflex Bearing (Discontinued)

Figure 9-4. Retention Assembly

UNCONTROLLED COPY WHEN DOWNLOADED OR PRINTED

Visit www.enstromhelicopter.com for instructions to order an original manual and to register for email notification of updates.

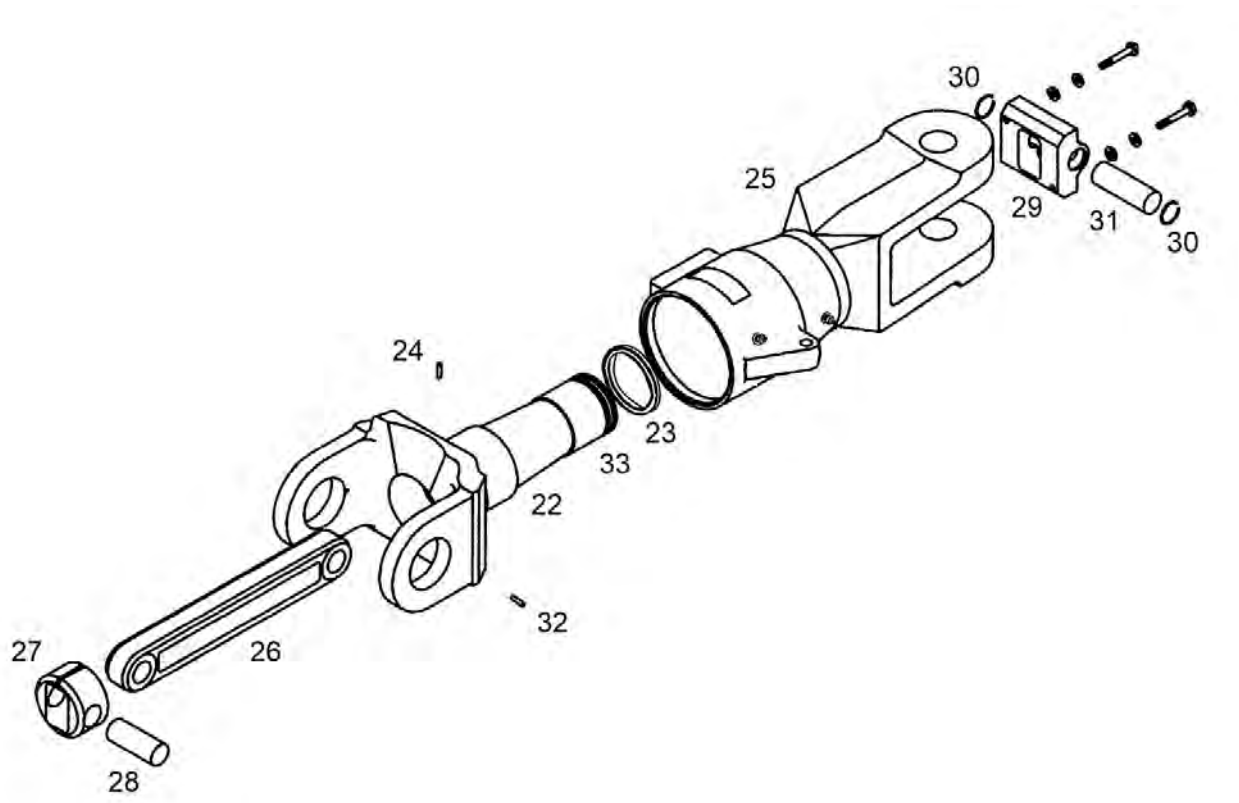

22.	Spindle	28.	Pin
23.	Seal	29.	Lug (Assembly) (Note 1)
24.	Pin	30.	Retaining Ring
25.	Grip Assembly	31.	Pin
26.	Tension-Torsion Strap	32.	Pin
27.	Cylinder (Assembly) (Note 1)	33	Adapter (Note 2)

Note 1: Component includes a cover.
Note 2: Shown as installed on the spindle.

Sheet 2 of 2
TT Strap (STC SR03465CH)

Figure 9-4. Retention Assembly

UNCONTROLLED COPY WHEN DOWNLOADED OR PRINTED

Visit www.enstromhelicopter.com for instructions to order an original manual and to register for email notification of updates.

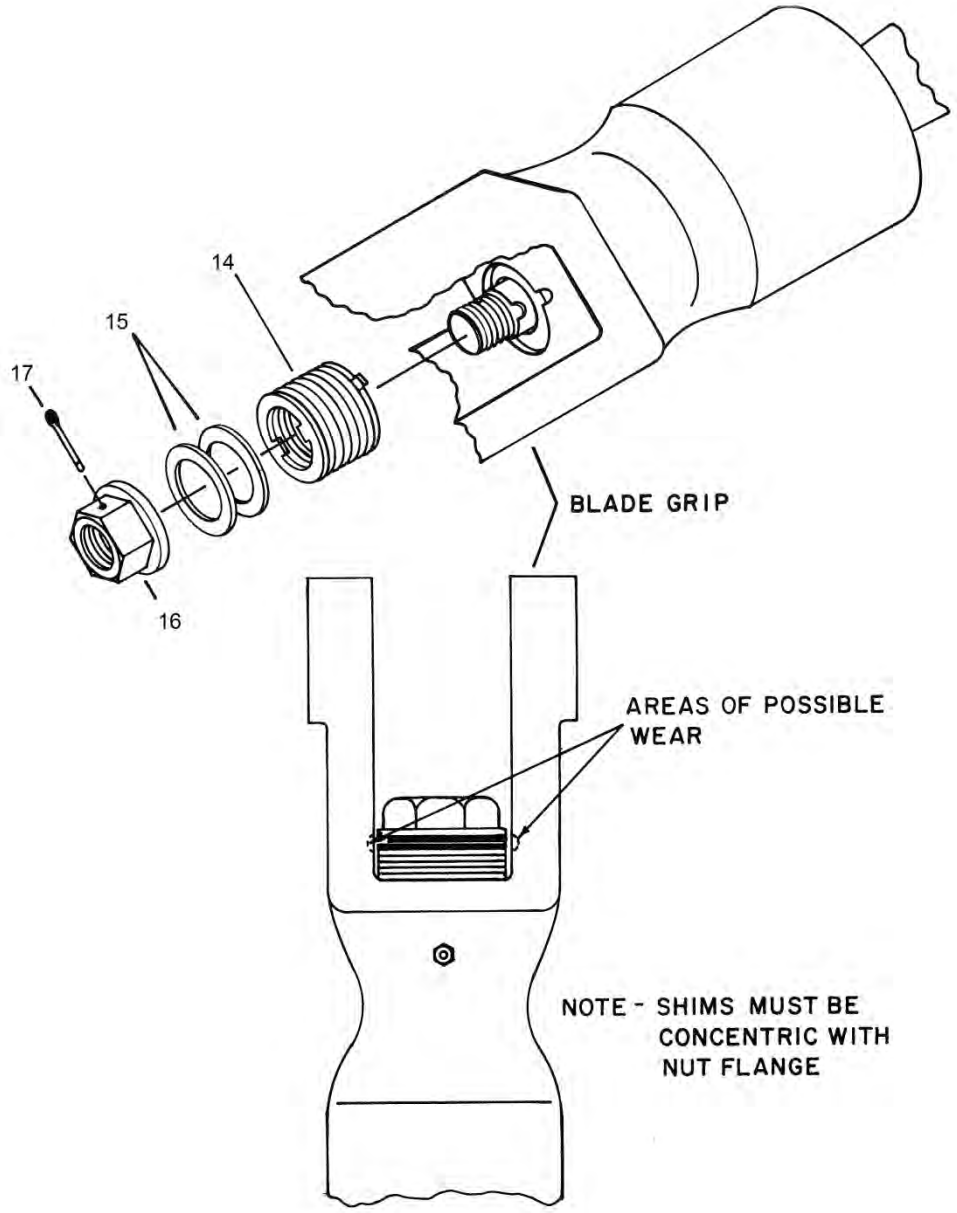

NOTE: Lamiflex bearings are discontinued.

Figure 9-5. Lamiflex Bearing Installation

UNCONTROLLED COPY WHEN DOWNLOADED OR PRINTED

Visit www.enstromhelicopter.com for instructions to order an original manual and to register for email notification of updates.

(7) Remove shims (15), lamiflex bearing (14), and nylatron strap (5).

(8) Tap blade grip (13) with a plastic mallet to remove.

CAUTION: IF LAMIFLEX BEARING WEARS THROUGH THE NYLATRON STRAP, A CAREFUL INSPECTION OF THE SPINDLE IS REQUIRED. THE MAXIMUM DEPTH ALLOWED FOR A GROOVE WORN IN THE SPINDLE IS .020 INCH. GROOVE MUST BE BLENDED OUT BEFORE INSTALLING A NEW NYLATRON STRAP.

(9) Remove O-ring (12) and DU washer (11) from the spindle.

(10) Remove retainer ring (10) from the groove in the main rotor spindle (3).

(11) Remove the hinge pin alignment roll pin from ear of spindle by tapping from the inside out with a small punch; do not drive through.

(12) Install press tool between seal (6) and bearing (7) on the spindle.

(13) Place in a hydraulic press and press bearings (7) and (9), and spacer (8) from the spindle (press one bearing at a time).

(14) Remove seal (6) from the spindle.

(15) Removal and replacement of retention stops (1) and (4) are necessary only if the stops are damaged or adhesive has loosened.

(16) Remove cap (2) from the bore of the spindle.

CAUTION: WHEN CLEANING PARTS FOR INSPECTION DO NOT SUBMERGE LAMIFLEX BEARING IN ANY TYPE OF CLEANING SOLVENT OR DAMAGE TO BEARING WILL RESULT. CLEAN BEARING BY HAND USING DENATURED ALCOHOL.

B.1 Disassembly – Retention Assembly with TT Strap (STC SR03465CH)

NOTE: Refer to Figure 9-4 Sheet 1 and Sheet 2 for item number references.

NOTE: Refer to Para. G for removing the TT strap without disassembling the retention assembly.

(1) Remove the retention assembly from the main rotor hub (Para. 9-3, A).

(2) Clamp the retention assembly vertically in a vise.

CAUTION: USE BRASS PROTECTOR PLATES IN THE VISE JAWS TO PREVENT FROM DAMAGING THE RETENTION ASSEMBLY.

(3) Remove the dust cover (18) from the blade end of the retention assembly.

(4) Remove one of the retaining rings (30) securing the pin (31) in the lug (29) at the outboard end of the retention assembly. Remove the pin (31) and the remaining retaining ring (30).

UNCONTROLLED COPY WHEN DOWNLOADED OR PRINTED

Visit www.enstromhelicopter.com for instructions to order an original manual and to register for email notification of updates.

(5) Pull the blade grip (25) from the spindle (22).

(6) Remove the seal (23) from the blade grip (25).

NOTE: Only remove the seal from the blade grip if replacing a defective seal or blade grip.

(7) Remove the spindle (22) from the vise and push the TT strap (26) back through the spindle.

(8) Remove the pin (28) from the cylinder (27) and separate the TT strap (26) from the cylinder.

NOTE: The pin used to secure the TT strap at the inboard end is not secured with retaining rings.

(9) Remove the retaining ring (10) from the spindle (22).

(10) If required, remove the pin (32) from the ear of the spindle (22) and remove pin (24) using a small punch.

NOTE: Do not remove the pin (24) from the spindle unless required.

(11) Install a press tool between the seal (6) and the bearing (7) on the spindle. Using a hydraulic press, press the bearings (7 and 9) and spacer (8) from the spindle.

(12) Remove the seal (6).

(13) Remove the retention stops (1 and 4).

NOTE: Removal/replacement of the retention stops are necessary only if the stops are damaged or the adhesive has loosened.

(14) Remove the hardware securing the lug (29) to the blade grip (25) and remove the lug.

(15) Remove the pitch arm (21) from the blade grip (25).

C. Inspection – Retention Assembly

(1) Refer to Table 9-2 and Table 9-2.1 for detailed inspection requirements.

D. Assembly – Retention Assembly with Lamiflex Bearing (Figure 9-4)

(1) If installing new retention stops (1) and (4) proceed as follows:

(a) Clean blocks (1) and (4) and spindle (3) with acetone or equivalent.

(b) Apply adhesive (DP 420 or equivalent) to the bonding surface of the stop and install the stop into position on the spindle. Install the screws to secure the droop stop.

(c) Allow the adhesive to dry until hard.

(2) Apply zinc chromate to the bore of the spindle (3) and install plug (2) in the end of the bore.

UNCONTROLLED COPY WHEN DOWNLOADED OR PRINTED

Visit www.enstromhelicopter.com for instructions to order an original manual and to register for email notification of updates.

(3) Clamp spindle (3) in vise in a vertical position.

(4) Apply lubrication (MIL-PRF-81322) to seal surface of the spindle (3) and install seal (6).

NOTE: Seal is installed with the spring side of the seal facing toward the ears of the spindle.

(5) Grease bearings (7) and (9) through the small hole in the bearing.

NOTE: It is helpful to heat the bearings with a heat gun to aid installation.

WARNING: USE PROTECTIVE GLOVES WHEN HANDLING HEATED PARTS.

(6) Apply lubrication (MIL-PRF-81322) to the bearing surface and press bearing (7) onto spindle.

(7) Install spacer (8) on spindle.

(8) Lubricate (MIL-PRF-81322) the bearing surface and press the bearing (9) onto the spindle using a plastic mallet.

NOTE: Be sure bearings (7) and (9) are seated firmly against the shoulders of the spindle.

(9) Install retainer ring (10) in the groove of the spindle.

(10) Install DU washer (11) on the spindle (3).

NOTE: DU washer must be installed with the chamfered side of the washer facing inboard toward bearings.

(11) Install O-ring (12) on the spindle until seated against DU washer (11).

(12) Install tool T-0036 behind seal (6) with the chamfered side of the tool toward the large radius of the spindle.

(13) Lubricate (MIL-PRF-81322) the bore of blade grip (13) and install on the spindle and bearings. Tap the grip down with a plastic mallet until seal (6) is seated in the grip.

(14) Remove tool T-0036 and tap the blade grip down until fully seated.

(15) Install nylatron strap (5) inside lamiflex bearing (14). Ensure that the ends of the nylatron do not overlap.

(16) Install lamiflex bearing (14) while aligning tabs to slots in spindle and blade grip.

(17) Install nut (16) and torque until the grip is fully seated on the spindle. Release the torque on the nut.

(18) Shim (15) the nut until the cotter pin hole in the nut aligns with the hole in the spindle when the nut is tightened (5-15 in-lb/0.6-1.7 Nm).

NOTE: Add or subtract shims until the cotter pin hole in the nut aligns with the hole in the spindle when the nut is tightened finger tight. Do not under tighten the nut to align the holes. Do not over tighten the nut align the holes.

UNCONTROLLED COPY WHEN DOWNLOADED OR PRINTED

Visit www.enstromhelicopter.com for instructions to order an original manual and to register for email notification of updates.

CAUTION: THE SHIMS MUST BE INSTALLED WITH THE O.D. OF THE SHIMS CONCENTRIC TO THE O.D. OF THE NUT AND THE LAMILFEX BEARING. IMPROPER ALIGNMENT OF THESE SHIMS CAN CAUSE WEAR TO THE INNER SURFACES OF THE MAIN ROTOR BLADE GRIP (FIGURE 9-5).

(19) Install nut (16) on the spindle and tighten until finger tight.

(20) Install cotter pin (17) after nut (16) has been properly shimmed and torqued. Bend the cotter pin ends to secure.

CAUTION: TO PREVENT LAMIFLEX BEARING DAMAGE, DO NOT OVER-ROTATE THE GRIP WITH THE PITCH CHANGE LINKS DISCONNECTED.

(21) Install dust cover (18) and secure with hardware.

(22) Install the flapping pin alignment pin into the spindle ear if it was removed.

(23) Install the pitch arm onto the blade grip. Install the hardware and torque to 75 in-lb/8.5 Nm. Lockwire the hardware (MS20995C32) in horizontal pairs.

(24) If the retention assembly is installed on the hub assembly, connect the pitch link (2) to the pitch change bellcrank (5) (Figure 9-1).

(25) Install the main rotor blade (Para. 9-13).

D.1 Assembly – Retention Assembly with TT Strap (STC SR03465CH)

(1) If removed, install the seal (23) into the blade grip (25) using the following procedure:

(a) Place the replacement seal on the seal installation tool (T-0149-13) with the open face against the tool.

(b) Place the blade grip over the seal installation tool.

(c) Place tool T-0149-11 onto the blade grip and using a press or other suitable device, press the seal into the blade grip seal bore.

(d) Remove the installation tools.

(2) If required, bond the covers for the cylinder (27) and lug (29) using the following procedure (Figure 9-4):

(a) Remove residual adhesive from the cover and cylinder/lug as required.

(b) Slightly abrade the bonding surfaces of the covers, cylinder, and lug.

(c) Bond the cover to the cylinder and/or lug using DP420 adhesive. Allow the DP420 adhesive to cure for 24 hours.

NOTE: Follow the mixing and application instructions for the DP420 adhesive or the DP420 will not cure or adhere properly.

(d) Apply a light bead of silicone sealant (732-RTV) around the cover.

UNCONTROLLED COPY WHEN DOWNLOADED OR PRINTED

Visit www.enstromhelicopter.com for instructions to order an original manual and to register for email notification of updates.

(3) If installing new retention stops (1 and 4), follow the procedures in Para. 9-3, D, (1).

(4) Clamp the spindle (22) in a vise in the vertical position.

CAUTION: USE BRASS PROTECTOR PLATES IN THE VISE JAWS TO PREVENT FROM DAMAGING THE RETENTION ASSEMBLY.

(5) If removed, apply a small amount of Loctite 635 (green) to the pin (24) and press the pin into the spindle (22) until the end is slightly recessed from the seal surface

(6) Lubricate (MIL-PRF-81322) the seal surface of the spindle (22) and install the seal (6) with the spring side facing toward the ears of the spindle.

(7) Lubricate (MIL-PRF-81322) the bearing surface and install the bearing (7) using a plastic mallet.

(8) Install the spacer (8).

(9) Lubricate (MIL-PRF-81322) the bearing surface and install the bearing (9) using a plastic mallet.

NOTE: Ensure the bearings are seated firmly against the spindle shoulders.

(10) Install the retaining ring (10).

(11) Install tool (T-0036) behind the seal with the chamfered side of the tool toward the large radius of the spindle (22).

(12) Remove the spindle (22) from the vise and insert the grip installation pilot tool (T-0149-12) into the spindle.

(13) Lubricate (MIL-PRF-81322) the seal surface on the adapter (33) in the outboard end of the spindle.

(14) Lubricate (MIL-PRF-81322) the bore of the blade grip and install the grip (25) on the spindle (22). Tap the grip onto the spindle with a plastic mallet until the seal in seated in the grip. Remove the pilot tool (T-0149-12) and the seal tool (T-0036) from the spindle.

(15) Install the lug (29) onto the end of the blade grip. Apply Loctite® 222MS to the threads of the hardware and install the hardware and torque.

(16) Install the TT strap (26) into the cylinder (27) so that the chamfer on the cylinder is facing inboard (center of main rotor hub) when the TT strap is installed in the spindle and install the retention pin (28).

(17) Lubricate (MIL-PRF-81322) the portion of the inner spindle bore (22) that contacts the O.D. of the cylinder (27).

(18) Install the TT strap (26) into the spindle (22) and ensure the groove in the cylinder engages the pin (24) in the spindle.

UNCONTROLLED COPY WHEN DOWNLOADED OR PRINTED

Visit www.enstromhelicopter.com for instructions to order an original manual and to register for email notification of updates.

(19) Install one of the retaining rings (30) into the lug (29). Align the TT strap (26) to the lug (29) and install the retention pin (31). Install the other retaining ring (30).

(20) Apply a bead of silicone sealant (732-RTV) around the perimeter of the cylinder assembly to form a seal between the cylinder and the spindle.

(21) Install pin (32) into the spindle ear if it was removed.

(22) Install the retention assembly onto the main rotor hub assembly (Para. 9-3, E).

(23) Install the pitch arm (21) onto the blade grip (25). Install the hardware and torque to 75 in-lbs/8.5 Nm. Lockwire (MS20995C32) the hardware in horizontal pairs.

(24) Service (purge lubricate) the blade grip (Para. 4-28).

NOTE: It is necessary to rotate the grip in the feather axis while purge lubricating the retention assembly. This will prevent damage to the seal.

CAUTION: DO NOT OVER ROTATE THE GRIP WHEN THE PITCH LINKS ARE DISCONNECTED (18° MAX).

(a) Ensure the seal (6) is not dislocated from the blade grip (25). If it has moved:

1 Remove the purge screw from the top of the blade grip.

2 Insert the blade of a flathead screwdriver between the seal and the spindle.

3 Carefully work the seal back into the grip.

NOTE: It is normal if grease is displaced out of the purge hole as the seal is pushed back into place.

4 Reinstall the purge screw.

(25) Install the dust cover (18).

E. Installation (Method 1) – Retention Assembly (Figure 9-3)

NOTE: Use the following procedure to install a retention assembly if the flapping bearings are installed in the universal blocks using the shimming procedure in Para. 9-4, C. (If not shimmed per Para. 9-4, C, use the procedure in Para. 9-3, F.)

NOTE: Match each retention assembly to the location marked in the upper hub adapter (reference Para. 9-2, B (3)).

NOTE: Installing a pilot (Figure 9-6) will keep the spacer and shims in the proper location while installing the hinge pin.

(1) Lubricate hinge pin (3) with grease (MIL-G-25537).

(2) Apply grease (MIL-G-25537) to both sides of one DU washer (1) recess and to both sides of a P/N 28-14019-5 shim (2). Install the shim on the greased bearing groove.

UNCONTROLLED COPY WHEN DOWNLOADED OR PRINTED

Visit www.enstromhelicopter.com for instructions to order an original manual and to register for email notification of updates.

NOTE: If installing the shim to the right side of the universal block, then install the shims for the other two universal blocks on the right. Likewise, if installing the shim to the left side, then install all shims to the left of the universal block.

(3) Install DU washers (1) in each side of U-block with the chamfered side of DU washers facing inboard toward the U-block.

NOTE: Ensure that the correct retention assembly is being installed on the shimmed universal block.

(4) Carefully slide the retention assembly into position over the DU washer and U-block.

NOTE: Enstrom recommends replacing Flapping Hinge Pin, P/N 28-14233-1, with Flapping Hinge Pin, P/N 28-14233-3, when reinstalling the main rotor retention assemblies after the flapping bearings have been shimmed. The Flapping Hinge Pin, P/N 28-14233-3, is manufactured to closer tolerances for bearing fit and will improve service life. Flapping Hinge Pin, P/N 28-14233-1, is an acceptable alternate and serviceable pins may be reinstalled.

(5) Twist the grip slightly to allow the hinge pin (3) to be installed; do not over twist to avoid damaging the lamiflex bearing, if equipped. Align the roll pin slot in the hinge pin with the roll pin and seat the hinge pin. Tap the roll pin flush with the hinge pin if it protrudes from the hinge pin.

(6) Lubricate nut (5) (MIL-PRF-2105, -23699, -81322) in the threads and on the surface of the nut where it will contact the lock washer (4).

(7) Install the lock washer (4) and nut (5) on the hinge pin (3).

(8) Insert a long punch into the damper rod-end attach holes in the flapping pin. Torque the nut using tool (T-0051-3) to 150-175 ft-lb/203.4-237.3 Nm. The nut may be torqued to 175 ft-lb/ 238.6 Nm for aligning one of the lockwasher tabs. While torqueing the nut, pull against the punch to avoid shearing off the roll pin that locates the head of the pin against the spindle on the pitch arm side of the retention assembly.

CAUTION: DO NOT PROCEED UNLESS THE UNIVERSAL BLOCK HAS BEEN ASSEMBLED (SHIMMED) IN ACCORDANCE WITH PARA. 9-4, C.

(9) Check the flapping bearing drag resistance at the blade pin. Initially, the grip should not stay up. Add shim thickness in 0.005 inch increments to achieve sufficient resistance to hold the grip in the up-stop position at 150 ft-lb/203.4 Nm. Remove one shim and verify the flapping bearing moves freely.

(10) Secure the nut by bending one of the tabs on the lockwasher (4) into a slot in the nut.

(11) Lubricate (MIL-G-25537) the flapping bearings (Para. 4-29).

(12) Repeat the procedure for the remaining retention assemblies.

(13) Install the main rotor damper (Para. 9-5, H), connect the pitch change link to the pitch change bellcrank and the pitch arm, and install the main rotor blade (Para. 9-13).

(14) Perform a maintenance test flight (Para. 12-13).

UNCONTROLLED COPY WHEN DOWNLOADED OR PRINTED

Visit www.enstromhelicopter.com for instructions to order an original manual and to register for email notification of updates.

F. Installation (Method 2) – Retention Assembly (Figure 9-3)

NOTE: Enstrom recommends internal shimming (Method 1) to increase the service life.

NOTE: Use the following procedure to install a retention assembly until the flapping bearings are installed in the universal blocks using the shimming procedure in Para. 9-4, C.

NOTE: Match each retention assembly to the location marked in the upper hub adapter (reference Para. 9-2, B (3)).

NOTE: Installing a pilot (Figure 9-6) will keep the spacer and shims in the proper location while installing the hinge pin.

(1) Lubricate hinge pin (3) with grease (MIL-G-25537).

(2) Install DU washers (1) in each side of U-block with the chamfered side of DU washers facing inboard toward the U-block.

(3) Carefully slide the retention assembly into position over the DU washer and U-block.

NOTE: Enstrom recommends replacing Flapping Hinge Pin, P/N 28-14233-1, with Flapping Hinge Pin, P/N 28-14233-3, when reinstalling the main rotor retention assemblies after the flapping bearings have been shimmed. The Flapping Hinge Pin, P/N 28-14233-3, is manufactured to closer tolerances for bearing fit and will improve service life. Flapping Hinge Pin, P/N 28-14233-1, is an acceptable alternate and serviceable pins may be reinstalled.

(4) Twist the grip slightly to allow the hinge pin (3) to be installed; do not over twist to avoid damaging the lamiflex bearing, if equipped. Align the roll pin slot in the hinge pin with the roll pin and seat the hinge pin. Tap the roll pin flush with the hinge pin if it protrudes from the hinge pin.

(5) Install the lock washer (4) and nut (5) on the hinge pin (3).

(6) Torque the nut to 50-100 ft-lb/68.2-136.4 Nm using tool (T-0051-3). Ensure the retention assembly does not remain in the up-stop position.

(a) Check the flapping bearing drag resistance at the flapping pin. Initially, the grip should not stay up. If the retention assembly stays up, remove shims in 0.005-inch increments until the retention assembly will drop with no resistance when the nut is torqued.

NOTE: Shims may be installed as required on the inboard side of the DU washers to avoid excessive torque in obtaining the flapping preload. All three retention assemblies should have an equal flapping preload.

(7) Lubricate the U-block lead lag and flapping bearings (Figure 4-2, Para. 4-30) and re-check the retention assembly in accordance with step (6). Reshim and retorque the nut, if required.

(8) Bend one of the tabs on the lockwasher (4) into a slot in the nut when the proper preload has been obtained.

UNCONTROLLED COPY WHEN DOWNLOADED OR PRINTED

Visit www.enstromhelicopter.com for instructions to order an original manual and to register for email notification of updates.

(9) Install the main rotor damper (Para. 9-5, H), connect the pitch change link to the pitch change bellcrank and the pitch arm, and install the main rotor blade (Para. 9-13).

(10) Perform a maintenance test flight (Para. 12-13).

G. Tension-Torsion Strap Removal

NOTE: The following procedure is performed for changing the tension-torsion (TT) straps. The blade grip does not need to be removed from the spindle when changing the TT straps

(1) Remove the retention assembly from the main rotor hub (Para. 9-3, A).

(2) Remove the dust cover (18) from the blade end of the retention assembly (Figure 9-4, Sheet 1).

(3) Remove one of the retaining rings (30, Figure 9-4, Sheet 2) securing the pin (31) in the lug (29) at the outboard end of the retention assembly. Remove the pin and the remaining retaining ring (30).

(4) Use a razor blade or sharp knife to cut the sealer securing the cylinder (27) into the root of the spindle (22).

CAUTION: TAKE CARE NOT TO DAMAGE THE SPINDLE OR CYLINDER.

(a) Using a non-metallic scraper remove the silicone sealant from the surfaces of the cylinder (27) and of the spindle (22).

(5) Push the TT strap (26) back through the spindle (22).

(6) Remove the pin (28) from the cylinder (27) and separate the TT strap (26) from the cylinder.

NOTE: The pin (28) used to secure the TT strap at the inboard end is not secured with retaining rings.

H. Tension-Torsion Strap Installation

(1) Install the TT strap (26) into the cylinder (27) so that the chamfer on the cylinder is facing inboard (center of main rotor hub) when the TT strap is installed in the spindle and install the pin (28).

(2) Lubricate (MIL-G-25537) the portion of the inner spindle bore (22) that contacts the O.D. of the cylinder (27).

(3) Install the TT strap (26) into the spindle (22) and ensure the groove in the cylinder (27) engages the pin (24) in the spindle.

(4) Install one of the retaining rings (30) into the lug (29). Align the TT strap (26) to the lug and install the pin (31). Install the other retaining ring (30).

(5) Verify proper installation of both retaining rings (30).

UNCONTROLLED COPY WHEN DOWNLOADED OR PRINTED

Visit www.enstromhelicopter.com for instructions to order an original manual and to register for email notification of updates.

(6) Apply a bead of silicone sealant (732-RTV) around the perimeter of the cylinder (27) to form a seal between the cylinder and the spindle (22).

(7) Install the dust cover (18).

(8) Reinstall retention assembly (Para. 9-3, E or F).

UNCONTROLLED COPY WHEN DOWNLOADED OR PRINTED

Visit www.enstromhelicopter.com for instructions to order an original manual and to register for email notification of updates.

Table 9-2. Inspection Requirements – Retention Assembly

Part Number	Figure 9-4 Item #	Part Name	Inspection*	Serviceable Limits*	Repair Limits*	Repair or Action
28-14240-1	1	Droop Stop	General Condition	.003 wear	Not Repairable	Replace Stop
28-14282-13 (See Note 3)	3	Spindle	Lamiflex bearing tab slot width .187 to .189	+.002	Not Repairable	Replace Spindle
			Small bearing surface Dia. 1.9996 to 2.0003	-.0003	Not Repairable	Replace Spindle
			Large bearing surface Dia. 2.4996 to 2.5002	-.0003	Not Repairable	Replace Spindle
			Seal surface Dia. 2.872 to 2.878	-.002	Not Repairable	Replace Spindle
			Flapping pin bore Dia. 1.7495 to 1.7500	+.0005	Not Repairable	Replace Spindle
			Threads (crossed or missing)	None Allowed	Not Repairable	Replace Spindle
			Nicks, scratches, or corrosion	None Allowed	≤ .010 deep	Blend and polish out smooth
			Cracks	None Allowed	Not Repairable	Replace Spindle
28-14231-1	4	Up Stop	General condition	.003 wear	Not Repairable	Replace Stop
			Cracks	None Allowed	Not Repairable	Replace Stop
28-14311-1	5	Nylatron Strap	Cracks or worn through	None Allowed	Not Repairable	Replace Strap

UNCONTROLLED COPY WHEN DOWNLOADED OR PRINTED

Visit www.enstromhelicopter.com for instructions to order an original manual and to register for email notification of updates.

Table 9-2. Inspection Requirements – Retention Assembly

P/N	Figure 9-4 Item #	Part Name	Inspection*	Serviceable Limits*	Repair Limits*	Repair or Action
40NBC20-52YZP	7	Bearing	O.D. 3.2492 to 3.2500	No Tolerance Allowed	Not Repairable	Replace Bearing
			I.D. 2.4993 to 2.5000	No Tolerance Allowed	Not Repairable	Replace Bearing
			Ratcheting or roughness	None Allowed	Not Repairable	Replace Bearing
28-14261-1	8	Spacer	Length 3.061 to 3.062	-.001	Not Repairable	Replace Spacer
			Ends parallel	Within .0012 FIM	Not Repairable	Replace Spacer
32NBC20-44YZP	9	Bearing	O.D. 2.7494 to 2.7500	No Tolerance Allowed	Not Repairable	Replace Bearing
			I.D. 1.9993 to 2.0000	No Tolerance Allowed	Not Repairable	Replace Bearing
			Ratcheting or roughness	None Allowed	Not Repairable	Replace Bearing
28-14313	11	DU Washer	Thickness .090 to.093	-.003	Not Repairable	Replace Washer
28-14279-1, -3 (See Note 3)	13	Grip Assembly	Blade retention bolt bore Dia. .875 to .876	+.0005	Not Repairable	Replace Blade Grip
			Large bearing bore Dia. 3.2512 to 3.2522	+.0018	Not Repairable	Replace Blade Grip
			Small bearing bore Dia. 2.7511 to 2.7519	+.0011	Not Repairable	Replace Blade Grip
			Thru bore Dia. 1.5145 to 1.5165	+.0015	Not Repairable	Replace Blade Grip
			Drag link ear width .745 to .747	-.001	Not Repairable	Replace Blade Grip

UNCONTROLLED COPY WHEN DOWNLOADED OR PRINTED

Visit www.enstromhelicopter.com for instructions to order an original manual and to register for email notification of updates.

Table 9-2. Inspection Requirements – Retention Assembly

P/N	Figure 9-4 Item #	Part Name	Inspection*	Serviceable Limits*	Repair Limits*	Repair or Action
28-14279-1, -3 (continued) (See Note 3)	13	Blade Grip (continued)	Threads (crossed or missing)	None Allowed	Not Repairable	Replace Blade Grip
			Nicks, scratches, or corrosion	None Allowed	≤ .010 deep	Blend and polish out smooth
			Cracks	None Allowed	Not Repairable	Replace Blade Grip
28-14320-12, -15	14	Lamiflex Bearing	Thickness .770-.790	(See Notes 1, 2)	Not repairable	(See Note 3)
			External to internal tab angle 12° (-12)	±1/2°	Not repairable	(See Note 3)
			External to internal tab angle 15° (-15)	±1/2°	Not repairable	(See Note 3)
			Column for separations	None allowed	Not repairable	(See Note 3)
28-14335	16	Nut	Thrust face for flatness	.0015	Not Repairable	Replace Nut
			Threads (rolled or missing)	None Allowed	Not Repairable	Replace Nut
28-14007-1,-3	19	Blade Retention Bolt	O.D. .8738 to .8745 (-1) O.D. .8733 to .8740 (-3)	-.0002	Not Repairable	Replace Bolt

Notes:
1. Lamiflex bearings that are found swelled from grease contamination should be cleaned with denatured alcohol and checked for delamination. If the bearing is swelled beyond the limits (.790" thick), they may still be serviceable if they can be reinstalled in accordance with Para. 9-3 and do not cause binding in the controls.
2. Any bearing that shows evidence of bulging around the outer circumference of the elastomer segments, excessive axial swelling, visual delamination of the segments or the expulsion of shim fragments on the outside diameter, should be replaced by an airworthy bearing prior to the next flight.
3. Lamiflex bearings are discontinued. If the Lamiflex bearings must be replaced, the aircraft must be converted to TT strap retention assembly. Spindle P/N 28-14282-13 and Grip Assembly P/N 28-14279 may be reworked for the TT strap installation. Refer to Enstrom F-28/280 series Illustrated Parts Catalog, Figure 4-2.1 for parts. See Table 9-2.1 for inspection requirements for STC items.

UNCONTROLLED COPY WHEN DOWNLOADED OR PRINTED

Visit www.enstromhelicopter.com for instructions to order an original manual and to register for email notification of updates.

Table 9-2. Inspection Requirements – Retention Assembly

P/N	Figure 9-4 Item #	Part Name	Inspection*	Serviceable Limits*	Repair Limits*	Repair or Action
28-14007 (continued)	19	Blade Retention Bolt (continued)	Threads (crossed or missing)	None Allowed	Not Repairable	Replace Bolt
			Nicks, scratches, or corrosion	None Allowed	≤ .010 deep	Blend and polish out smooth
			Cracks	None Allowed	Not Repairable	Replace Bolt
28-14283	20	Drag Link	Distance between blade grip ears .748	± .001	Not Repairable	Replace Link
			Distance between blade root ears .564 to .566	± .0005	Not Repairable	Replace Link
			Retention bolt hole Dia. (2 places) .3745 to .3750	-.0002	Not Repairable	Replace Link
			Nicks, scratches, or corrosion	None Allowed	≤ .010 deep	Blend and polish out smooth
			Cracks	None Allowed	Not Repairable	Replace Link
28-14278	21	Pitch Arm	Pitch change link bolt and mount bolt hole Dia. (5 places) .312 to .315	-.001	Not Repairable	Replace Arm
			Nicks, scratches, or corrosion	None Allowed	≤ 0.10 deep	Blend and polish out smooth
			Cracks	None Allowed	Not Repairable	Replace Arm

* All dimensions are in inches.

UNCONTROLLED COPY WHEN DOWNLOADED OR PRINTED

Visit www.enstromhelicopter.com for instructions to order an original manual and to register for email notification of updates.

Table 9-2.1. Inspection Requirements – Retention Assembly

P/N	Figure 9-4 Sheet 2 Item #	Part Name	Inspection*	Serviceable Limits*	Repair Limits*	Repair or Action
AA-28-14385-13 28-14385-13 28-14385-15	22	Spindle	Refer to manufacturer's instructions for continued airworthiness (ref. Table 2-2)			
28-14386-5 AA- 28-14386-1	25	Grip Assembly	Refer to manufacturer's instructions for continued airworthiness (ref. Table 2-2)			
AA-ECD-084-280	26	Tension-Torsion Strap	Refer to manufacturer's instructions for continued airworthiness (ref. Table 2-2)			

UNCONTROLLED COPY WHEN DOWNLOADED OR PRINTED

Visit www.enstromhelicopter.com for instructions to order an original manual and to register for email notification of updates.

INTENTIONALLY LEFT BLANK

UNCONTROLLED COPY WHEN DOWNLOADED OR PRINTED

Visit www.enstromhelicopter.com for instructions to order an original manual and to register for email notification of updates.

9-4 UNIVERSAL BLOCK ASSEMBLY

A. Disassembly – Universal Block (Figure 9-2)

(1) Remove upper and lower bearings (22) and DU washers (23) from U-block (15).

(2) Press flapping bearings (22), spacer (24), and shims (25) from bore of U-block.

NOTE: Flapping bearings can be removed from the universal blocks using the Flapping Bearing Removal/Installation Tool T-0151-1 when the universal blocks are installed on the aircraft.

(3) Remove screws and stop blocks (21) if visual damage appears on the blocks.

(4) Remove grease fittings (20).

B. Inspection – Universal Block

(1) Refer to Table 9-1 for detailed inspection requirements.

C. Assembly – Universal Block (Figure 9-2, Figure 9-6, Figure 9-7, Figure 9-8, Figure 9-9)

(1) Install stop blocks (21) and secure with screws.

(2) Index mark the universal blocks and retention assemblies as sets.

(3) Measure the stack up of two bearings (22) and one spacer (24) and measure the distance between the spindle fork (refer to Figure 9-6).

(4) If the bearing and spacer stack up (DIM. X) is less than the distance between the spindle fork (DIM. Y), add shims (25) (P/N 28-14009-x) between the bearings and the spacer to create a zero tolerance fit.

NOTE: Use an arbor press to install the flapping bearings if the main rotor hub is disassembled. If the main rotor hub is assembled, use the Universal Block Bearing Tool, T-0151-1, to install the flapping bearing.

(5) Lubricate (MIL-G-25537) the bore of the U-block and the O.D. of the flapping bearings. Install a DU washer (23) in the recessed area on the "forward" side of the U-block and place the U-block in an arbor press with the "forward side" and DU washer up. Press a flapping bearing (22) into the U-block until it is flush with the DU washer (Figure 9-7).

NOTE: If desired, an alignment/installation pilot (included with the tool, T-0151-1) can be fabricated to aid in the installation of the bearing, spacer, and shims into the universal block (refer to Figure 9-9). This pilot may also be used to aid in installation of the flapping pin when installing the retention assemblies.

(6) Rotate the U-block in the press and install the spacer (24) and shims (25) (P/N 28-14009-x), if required. Press the other flapping bearing into the bore until seated against the spacer. Ensure that the first flapping bearing is still flush with the DU washer.

(7) Remove the DU washer.

(8) Repeat the procedure for the remaining universal blocks.

UNCONTROLLED COPY WHEN DOWNLOADED OR PRINTED

Visit www.enstromhelicopter.com for instructions to order an original manual and to register for email notification of updates.

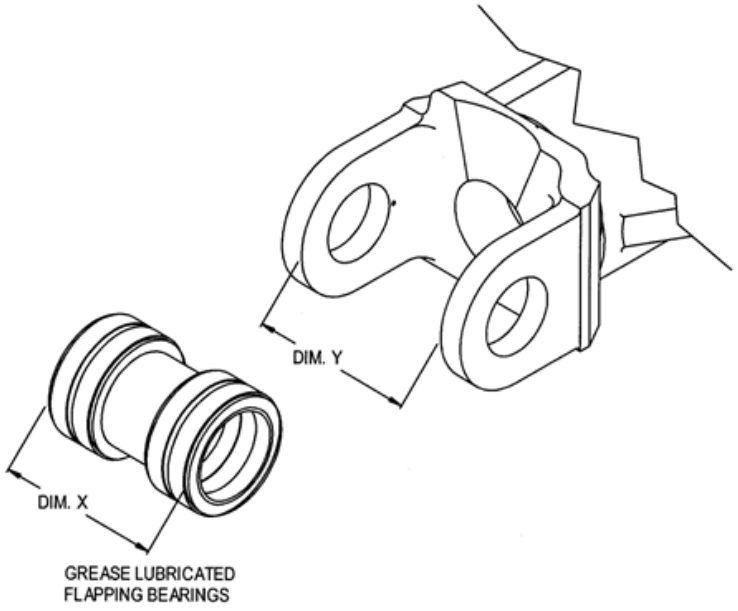

Figure 9-6. Flapping Bearing and Spindle Dimension Check

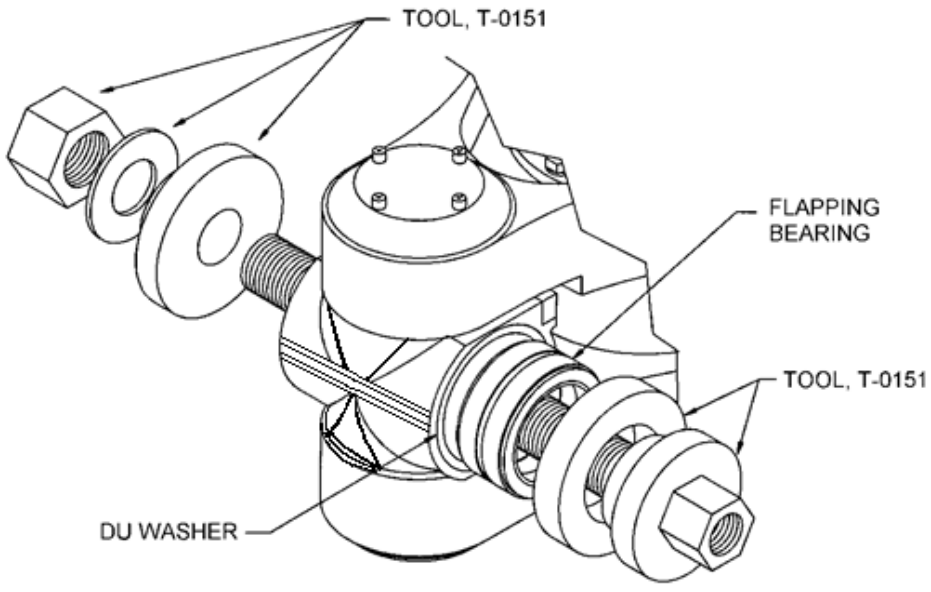

Figure 9-7. “Forward” Flapping Bearing Installation

UNCONTROLLED COPY WHEN DOWNLOADED OR PRINTED

Visit www.enstromhelicopter.com for instructions to order an original manual and to register for email notification of updates.

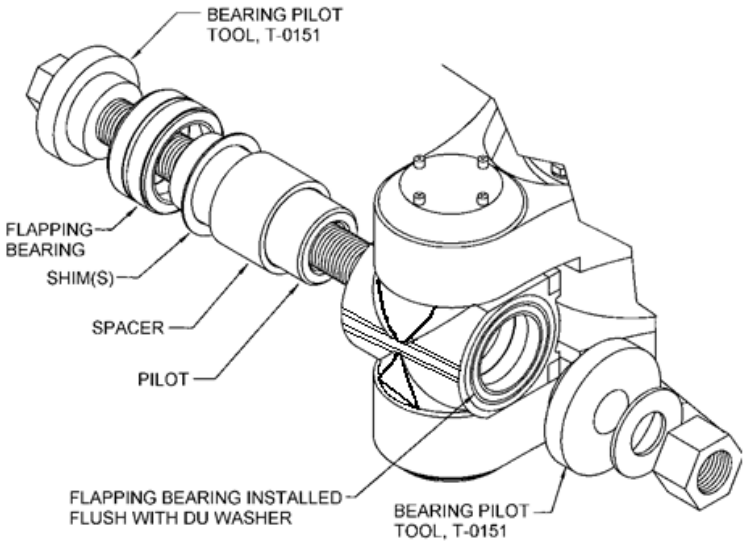

Figure 9-8. "Aft" Flapping Bearing and Spacer Installation

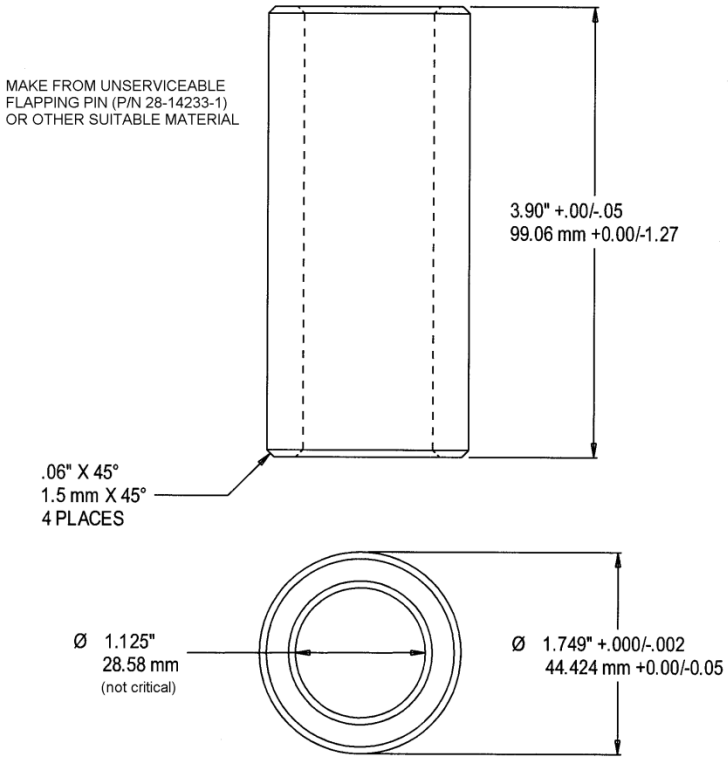

Figure 9-9. Flapping Bearing Installation Alignment Tool

UNCONTROLLED COPY WHEN DOWNLOADED OR PRINTED

Visit www.enstromhelicopter.com for instructions to order an original manual and to register for email notification of updates.

9-5 DAMPERS

A. General Information – Dampers

The damper assembly consists of a damper housing, a piston and restrictor assembly, and a reservoir with two relief valves. The damper is used to damp lead-lag movement of the main rotor blades. Proper servicing and maintenance are required to keep the dampers operating at an equal rate.

B. Troubleshooting – Dampers

(1) Refer to Para. 12-1, for damper-related main rotor system troubleshooting.

(2) Lead-Lag Check

(a) Move blade slowly fore and aft to cycle damper.

NOTE: The damper should offer resistance through the complete cycle – no undamped motion.

C. Removal – Dampers

(1) Remove the damper as follows (Figure 9-10):

(a) Remove cotter pin (8), nut (7) and washers (6).

(b) Remove bolt (5) and washer (6).

(c) Pivot the damper to remove spacers (9) on top and bottom of damper rod end.

(d) If required, remove the center bolt (4) and hardware of the pitch change bellcrank (Figure 9-1).

NOTE: If the bolt is installed in the reverse direction, the bolt (4) and hardware must be removed to facilitate removal of the inboard damper pivot bolt.

(e) Remove nut (4) and washer (3) from inboard damper pivot bolt (1) and remove bolt (1) and washer (2).

(f) Remove the damper from the hub assembly.

D. Disassembly – Dampers (Figure 9-11)

(1) Remove the damper from the helicopter (Para. 9-5, C).

(2) Disengage the locking feature on the rod end (20), as applicable:

(a) Straighten the locking washer tabs (29) (-1 and -5 dampers) or remove the safety wire from the locking key (18).

UNCONTROLLED COPY WHEN DOWNLOADED OR PRINTED

Visit www.enstromhelicopter.com for instructions to order an original manual and to register for email notification of updates.

(3) Loosen jam nut (19) and remove the rod end (20) from the piston (6) or (30):

(a) Use tool T-0005 to hold the piston.

(4) Remove reservoir plugs (26) and pour the damper fluid from the reservoir.

(5) Remove reservoir plugs (23) and O-rings (24).

(6) Remove bolts (28) and washers (16) securing the reservoir to the damper and remove the reservoir.

(7) Remove sleeves (27) and O-rings (25).

(8) If troubleshooting indicates a malfunctioning relief valve, remove the relief valve (22) using a 9/16" deep-well socket. Refer to Para. 9-5, F for replacement instructions.

CAUTION: THE RELIEF VALVE PRESSURE HAS BEEN PRESET AT THE FACTORY AND CANNOT BE ADJUSTED IN THE FIELD. RETURN A FAULTY VALVE TO ENSTROM HELICOPTER SERVICE FOR INSPECTION AND VALVE ADJUSTMENT/EXCHANGE.

(9) Remove bolts (17) and washers (16) from the damper housing and cap (10).

(10) Rotate end cap (10) approximately 45° using a soft mallet, and remove the end cap by tapping outward on its corners.

NOTE: Remove all burrs from piston shaft to prevent damage to the brass sleeve and seals during end cap removal.

(11) Pour the damper fluid from the damper housing.

(12) Tap piston (6) or (30) out of housing with a nylon drift and remove O-ring or seal pack (9) from the piston.

CAUTION: DO NOT DAMAGE THE I.D. OF THE SLEEVES DURING SEAL AND WIPER REMOVAL.

NOTE: Remove the brass sleeve assemblies only if the seals are going to be replaced so as to reduce wear on the cover (10) and damper housing (1) bore.

NOTE: Threadlocker is applied to the sleeves (5) and (12) upon initial installation at the factory. Heating the housing and the end cap to 250°F/121°C may aid removal of the sleeves.

(13) Press the brass sleeves (5) and (12) from the end cap (10) and the damper housing (1). Remove seals (14) and wipers (13) from the brass sleeves. If evident, remove threadlocker residue with a suitable hand tool (pick).

(14) Install tool T-0095 between ears of damper housing and press bushing (3) out using a suitable size drift.

(15) Inspect the face of the bushings (2) for fretting and wear. DO NOT remove the bushings unless replacement is required. Upon replacement, bushings must be reamed with a ½" line reamer.

UNCONTROLLED COPY WHEN DOWNLOADED OR PRINTED

Visit www.enstromhelicopter.com for instructions to order an original manual and to register for email notification of updates.

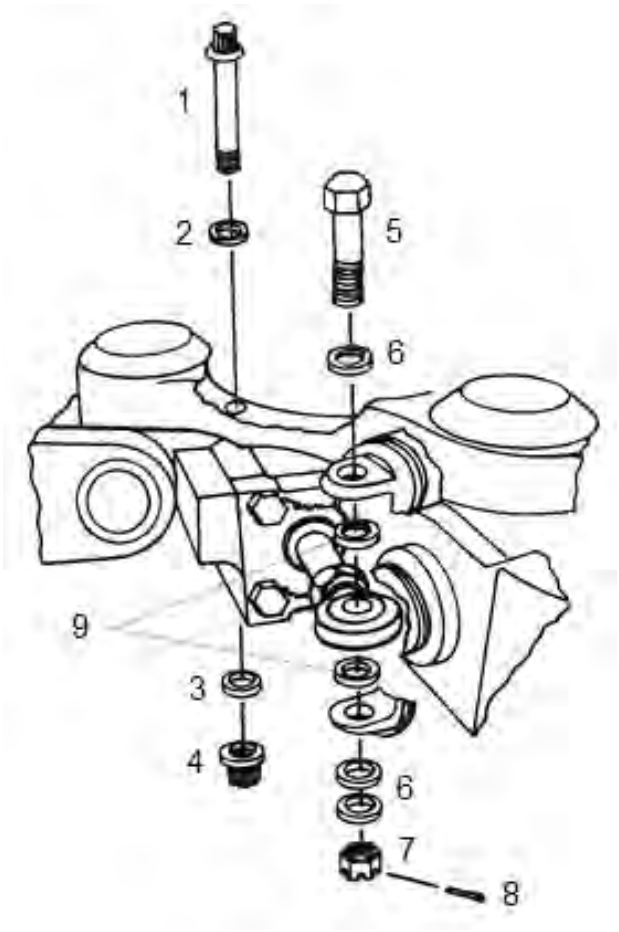

1. Inboard Pivot Bolt
2. Chamfered Washer
3. Washer
4. Nut
5. Bolt
6. Washer
7. Nut
8. Cotter Pin
9. Spacer

Figure 9-10. Damper Installation

UNCONTROLLED COPY WHEN DOWNLOADED OR PRINTED

Visit www.enstromhelicopter.com for instructions to order an original manual and to register for email notification of updates.

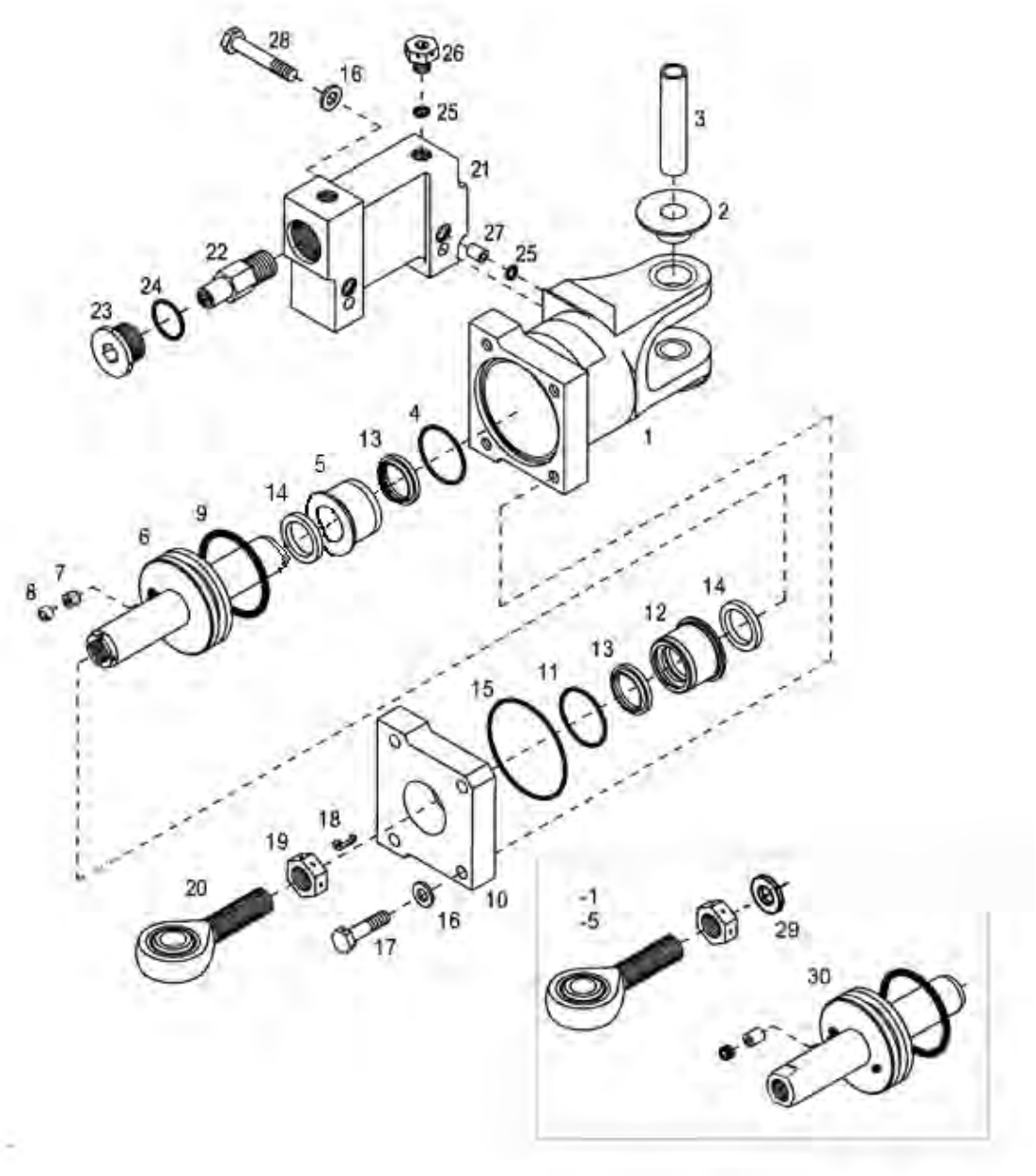

1.	Damper Housing	11.	O-Ring	21.	Reservoir
2.	Bushing	12.	Sleeve	22.	Valve Assembly
3.	Bushing	13.	Wiper	23.	Cap Plug
4.	O-Ring	14.	Seal	24.	O-Ring
5.	Sleeve	15.	O-Ring	25.	O-Ring
6.	Piston	16.	Washer	26.	Plug
7.	Restrictor Sleeve	17.	Bolt	27.	Sleeve
8.	Set Screw	18.	Lock Key	28.	Bolt
9.	O-Ring or Seal Pack	19.	Jam Nut	29.	Washer
10.	End Cap	20.	Damper Rod End Bearing	30.	Piston (-1, -5)

Figure 9-11. Hydraulic Damper Assembly

UNCONTROLLED COPY WHEN DOWNLOADED OR PRINTED

Visit www.enstromhelicopter.com for instructions to order an original manual and to register for email notification of updates.

E. Damper – Inspection

(1) Refer to Table 9-3 for inspection criteria.

F. Relief Valve Replacement (Figure 9-11)

NOTE: The relief valve pressure has been preset at the factory and cannot be adjusted in the field. Return faulty valves to Enstrom Helicopter Service for inspection and valve adjustment/exchange.

(1) Remove damper from the aircraft (Para. 9-5, C).

(2) Remove plugs (26) and O-rings (25).

(3) Drain the damper fluid.

(4) Remove plugs (23) and O-rings (24).

(5) Remove relief valve (22) through the open ports with a 9/16” deep-well socket.

(6) Install new relief valve (22). Torque 350 in-lb/39.8 Nm.

(7) Install O-rings (24) and plugs (23). Torque plugs 350 in-lb/39.5 Nm.

(8) Fill reservoir with fluid (SF96-20) through the top bleeder ports.

(9) Install O-rings (25) and plugs (26). Torque plugs 40-60 in-lb/4.5-6.8 Nm

(10) Follow the servicing procedure to ensure all air is purged from the damper (Para. 4-18).

(11) Safety wire the plugs.

G. Assembly – Dampers (See Figure 9-11)

CAUTION: DO NOT DAMAGE THE I.D. OF THE SLEEVES DURING SEAL AND WIPER INSTALLATION.

(1) Install O-rings (4) and (11) on the sleeves (5) and (12).

(2) Install the sleeves (5) and (12) as follows:

(a) Install seals (14) in the inboard groove of the sleeves with the O-ring side toward the piston. Ensure that the seal (14) has the O-ring installed in it.

(b) Install wiper (13) in the outboard groove of the sleeves with the lip of the wiper facing outboard.

(3) Press sleeve assemblies into the end cap (10) and the damper housing (1).

(4) If bushings (2) were removed, apply a small bead of Loctite 277 around the O.D. of the bushing (2) and install tool (T-0095) between the ears of the damper housing. Using an arbor press, install the bushings into the housing. If new bushings are installed, they must be line reamed with a ½ in. line reamer.

UNCONTROLLED COPY WHEN DOWNLOADED OR PRINTED

Visit www.enstromhelicopter.com for instructions to order an original manual and to register for email notification of updates.

(5) Place the damper housing in a vise with the bore up.

CAUTION: ENSURE COMPONENTS ARE FREE OF DIRT OR OTHER CONTAMINANTS PRIOR TO ASSEMBLY.

CAUTION: DO NOT DAMAGE THE O-RINGS OR SEALS DURING THE ASSEMBLY PROCESS.

(6) Lubricate (SF96-20) the bore of the housing and the I.D. of the seal (14) of the installed sleeve assembly.

(7) Install O-ring or seal pack (9) using the following procedure:

(a) Lubricate O-ring or seal pack (9) with damper oil and install on the piston (6) or (30). Use tool T-0160 to install the seal pack.

(b) Install piston (6) or (30) into damper housing by gently tapping with a plastic mallet until piston is bottomed out. Tool T-0160-1 installation collar, or equivalent, must be used to install the piston if a seal pack is used.

NOTE: Threaded end of piston must face the end cap (10).

(8) Fill damper housing (1) with SF96-20 damper oil and install O-ring (15) into the recess of the damper housing (1).

(9) Lubricate the I.D. of the seal (14) in end cap (10) with SF96-20 oil and gently slide the end cap over the end of piston (6) or (30). Tap gently to seat the end cap into the damper housing.

NOTE: Care must be used not to cut O-rings and seals on installation.

(10) Secure end cap (10) to the housing with bolts (17) and washers (16). Torque the bolts using cross pattern tightening sequence (50-70 in-lb/5.6-7.9 Nm).

(11) If relief valve (22) has been removed for cleaning or replacement, re-install the valve in the reservoir (21) using a 9/16” deep well socket. Torque the valve to 350 in-lb/39.8 Nm.

(12) Reposition the damper to horizontal position in a vise with the reservoir parts up.

(13) Install O-rings (25) onto sleeves (27) and insert sleeves into ports in the damper housing.

(14) Align reservoir (21) with sleeves (27) on the damper housing and position the reservoir in place. Secure with bolts (28) and washers (16) and torque bolts (50-70 in-lb/5.6-7.9 Nm).

(15) Place O-rings (24) on plugs (23) and install the plugs into the reservoir. Torque plugs 350 in-lb/39.5 Nm and safety.

(16) Reposition the damper in vise with bleeder ports up. Move the damper piston approximately 2 inches off bottomed out position.

(17) Fill the reservoir with SF96-20 damper oil and install O-rings (25) and plugs (26). Torque plugs 40-60 in-lb/4.5-6.8 Nm and safety.

(18) Install the damper rod end bearing assembly (20).

UNCONTROLLED COPY WHEN DOWNLOADED OR PRINTED

Visit www.enstromhelicopter.com for instructions to order an original manual and to register for email notification of updates.

NOTE: The rod end bearing assembly may have been previously treated with ACF-50 or MIL-PRF-23377 Type I Class 2C or Class N epoxy primer corrosion inhibitor per SDB 0127. If continuing use of ACF-50, removal of prior ACF-50 application is unnecessary. If changing from ACF-50 to epoxy primer, ACF-50 residue must be removed before reinstallation. For helicopters S/N 833 (F-28F) and subsequent and S/N 2157 (280FX) and subsequent, the rod ends are treated with epoxy primer at the time of manufacture.

(a) Remove jam nut (19).

(b) For new epoxy primer application, remove any ACF-50 residue from the threads of the rod end and the interior threads of the piston with a suitable solvent.

(c) If applying a touch-up of epoxy primer, remove any loose epoxy primer residue from the threads of the rod end and the interior threads of the piston with a brush and a small amount of solvent.

CAUTION: DO NOT ALLOW THE EPOXY PRIMER TO DRY PRIOR TO ASSEMBLY OF THE ROD END.

CAUTION: MASK THE BEARING AREA PRIOR TO APPLYING EPOXY PRIMER TO AVOID DAMAGING THE BEARING.

NOTE: Follow the manufacturer's instructions for corrosion inhibitor application.

(d) Apply the applicable corrosion inhibitor to the entire thread length of the rod end, as required.

NOTE: Installing the jam nut will tend to wipe away corrosion inhibitor that was freshly applied. Re-apply to ensure complete coverage.

(e) Install jam nut (19) and locking key (18) or flat lock washer (29), as applicable.

(f) Re-apply corrosion inhibitor to the threads below the jam nut, as required.

(g) Install the damper rod end bearing assembly (20) into the damper piston (6) or (30) until the correct rod end dimension is obtained (Figure 9-12):

1 (-1 and -5 dampers) Dimension equals 0.975 in ± .025 in/26.7 mm ± .13 mm from centerline of rod end to outboard edge of jam nut (19).

2 (-3, -7, -101, and -105 dampers) Dimension equals 1.050 in ± .005 in/26.7 mm ± .13 mm from centerline of rod end to outboard edge of jam nut (19).

NOTE: Locking key (18) must be aligned into piston slots before jam nut will seat against end of piston (-3, -7, -101, and -105 dampers).

(h) Re-apply corrosion inhibitor to the threads above the jam nut, as required.

UNCONTROLLED COPY WHEN DOWNLOADED OR PRINTED

Visit www.enstromhelicopter.com for instructions to order an original manual and to register for email notification of updates.

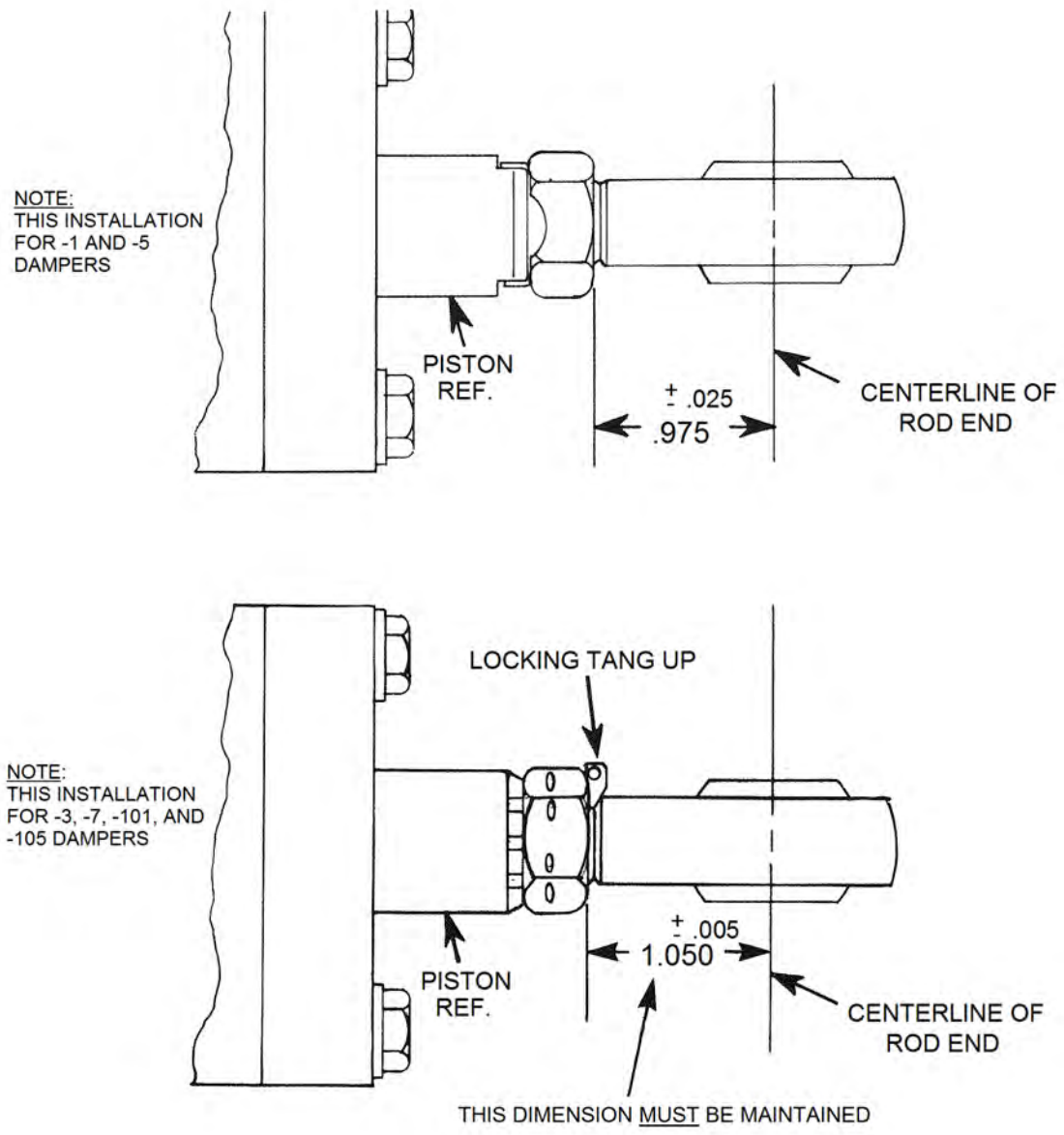

Figure 9-12. Damper Rod End Installation

Visit www.enstromhelicopter.com for instructions to order an original manual and to register for email notification of updates.

(19) Hold the rod end with a wrench or tool T-0005 and tighten the jam nut (19) when the correct position is set.

1 (-1 and -5 dampers) Bend the locking washer tabs (29).

2 (-3, -7, -101, and -105 dampers) Position the locking key toward the top of the damper. Safety wire the jam nut (19) to locking key (18).

(20) Bleed the dampers and safety (Para. 4-18).

H. Installation – Damper (Figure 9-10)

NOTE: Refer to SDB 0127 regarding rod end inspection.

NOTE: The bellcrank center attachment bolt is installed in the reverse direction as the other two bolts (Figure 9-1).

(1) Install damper assembly on main rotor hub.

NOTE: The slotted-style rod end using the locking key (tang) must be installed with the slot facing up. This position for the locking key prevents interference with the hinge pin.

(2) Install chamfered washer (2) on inboard damper bolt (7).

NOTE: Chamfered side of washer must go against bolt head.

(3) Install inboard bolt (7) through the hub plates and the damper. Install the bottom washer (3) and nut (4).

(4) Torque the bolt to 190 in-lb/21.5 Nm.

(5) Ensure that the damper will pivot on the inboard bolt and bushing.

(6) Pivot the damper to align the rod end with the hole in the hinge pin.

(7) Install spacers (9) on each side of the rod end and slide the rod end into the hinge pin while aligning the spacers with the hole.

(8) Install washer (6) on the bolt (5) and install the bolt through the hinge pin and the rod end. Install two washers (6) and locknut (7) on bolt.

(9) Torque the bolt (5) to 450-500 in-lb/50.8-56.5 Nm while aligning cotter pin hole. Install the cotter pin (8).

UNCONTROLLED COPY WHEN DOWNLOADED OR PRINTED

Visit www.enstromhelicopter.com for instructions to order an original manual and to register for email notification of updates.

Table 9-3. Inspection Requirements – Damper Assembly

Part Number	Figure 9-11 Item #	Part Name	Inspection*	Serviceable Limits*	Repair Limits*	Repair or Action
28-14357-5 28-14357-3 28-14357-1	1	Housing	Sleeve fore Dia. 1.1250 to 1.255	+.0002	Not Repairable	Replace Housing
			Flanged bushings in the ears for excessive fretting	1/3 of total face light fretting	½ of total face light fretting	Blend and polish out smooth
			Obstruction in the flow ports	None Allowed		Clear with compressed air
			Threads (crossed or missing)	None Allowed	Not Repairable	Replace Housing
			Security of chrome sleeve in bore of the Housing	No movement allowed	Not Repairable	Replace Housing
			Surface scratches	None Allowed	≤ .020 deep	Blend and polish out smooth
28-14277-1	3	Bushing	O.D. .4995 to .5005	-.0005	Not Repairable	Replace Bushing
			I.D. .3747 to .3757	+.0005	Not Repairable	Replace Bushing
			Nicks and scratches	.005 deep	≤ .005 deep	Blend and polish out smooth
28-14359-17			O.D. .4994 to .4999	-.0005	Not Repairable	Replace Bushing
			I.D. .3765 to .3775	+.0005	Not Repairable	Replace Bushing
			Nicks and scratches	.005 deep	≤ .005 deep	Blend and polish out smooth

UNCONTROLLED COPY WHEN DOWNLOADED OR PRINTED

Visit www.enstromhelicopter.com for instructions to order an original manual and to register for email notification of updates.

Table 9-3. Inspection Requirements – Damper Assembly

Part Number	Figure 9-11 Item #	Part Name	Inspection*	Serviceable Limits*	Repair Limits*	Repair or Action
28-14356-5	5 and 12	Sleeve	O.D. 1.1260 to 1.1265	-.0002	Not Repairable	Replace sleeve
			Piston shaft bore Dia. .749 to .751	+.002	Not Repairable	Replace sleeve
			O.D. to I.D. concentricity	.002 FIM	Not Repairable	Replace sleeve
28-14370-17 28-14370-15 28-14267-13	6, 30	Piston	Piston shaft O.D. .746 to .748	-.001	Not Repairable	Replace Piston
			Concentricity	.001 TIR	Not Repairable	Replace Piston
			Obstruction in the flow restrictor	None Allowed		Clear with compressed air
			Nicks or scratches in surface	None Allowed	≤ .5” long and ≤ .005 deep	Blend and polish out smooth
			Threads	No crossed or missing threads	Not Repairable	Replace Piston
28-14265-3 28-14265-1	10	End Cap	Sleeve bore dia. 1.1250 to 1.1255	+.0002	Not Repairable	Replace Cap
			Obstruction in the fluid port	None Allowed		Clear with compressed air
			Surface for nicks and scratches	None Allowed	≤ .020 deep	Blend and polish out smooth
			Cracks	None Allowed	Not Repairable	Replace Cap

UNCONTROLLED COPY WHEN DOWNLOADED OR PRINTED

Visit www.enstromhelicopter.com for instructions to order an original manual and to register for email notification of updates.

Table 9-3. Inspection Requirements – Damper Assembly

Part Number	Figure 9-11 Item #	Part Name	Inspection*	Serviceable Limits*	Repair Limits*	Repair or Action
ECD091-1	20	Damper Bearing	Radial Play	.007	Not Repairable	Replace Bearing
			Axial Play	.005	Not Repairable	Replace Bearing
			Threads (crossed or missing)	None Allowed	Not Repairable	Replace Rod End
28-14366-1	21	Reservoir	Obstruction in the flow ports	None Allowed		Clear with compressed air
			Threads (crossed or missing)	None Allowed	Not Repairable	Replace Reservoir
			Nicks, scratches, or corrosion	.020 deep	≤ .020 deep	Blend and polish out smooth
			Cracks	None Allowed	Not Repairable	Replace Reservoir
			If the valves are removed, valve threads and ports for contamination	None Allowed		Flush with cleaning solvent and dry with compressed air
28-14368-2	23	Plug	Threads (crossed or missing)	None Allowed	Not Repairable	Replace Plug
AN814-2DL	26	Plug	Threads (crossed or missing)	None Allowed	Not Repairable	Replace Plug
28-14369-1	27	Sleeve	O.D. and I.D. for nicks or scratches	None Allowed	Not Repairable	Replace Sleeve
		All O-Rings, Wiper, and Seals	Inspect for obvious defects	None Allowed	Not Repairable	Replace as required

* All dimensions are in inches.

UNCONTROLLED COPY WHEN DOWNLOADED OR PRINTED

Visit www.enstromhelicopter.com for instructions to order an original manual and to register for email notification of updates.

INTENTIONALLY LEFT BLANK

UNCONTROLLED COPY WHEN DOWNLOADED OR PRINTED

Visit www.enstromhelicopter.com for instructions to order an original manual and to register for email notification of updates.

NOTE: Figure 9-13 through Figure 9-15 are reserved for future use.

UNCONTROLLED COPY WHEN DOWNLOADED OR PRINTED

Visit www.enstromhelicopter.com for instructions to order an original manual and to register for email notification of updates.

INTENTIONALLY LEFT BLANK

UNCONTROLLED COPY WHEN DOWNLOADED OR PRINTED

Visit www.enstromhelicopter.com for instructions to order an original manual and to register for email notification of updates.

9-6 Main Rotor Blades

9-7 Description – Main Rotor Blades (Figure 9-16)

The main rotor blades are of hollow construction. Upper and lower skins are bonded to the extruded leading edge spar which is twisted 7.25. Doublers are bonded to the root end of the blade for retaining the blades to the main rotor hub. The blades are retained by a single retention pin to the blade grip and a non-adjustable drag brace connected to the trailing edge of the blades. Provisions for spanwise and cordwise balance weights are provided in the tip caps that are bonded in the tip end of the blades. Two tracking tabs are riveted to the trailing edge of each blade.

9-8 Removal – Main Rotor Blades (Figure 9-17)

NOTE: Lifting the tip of the blade until the blade is parallel to the retention assembly will allow the retention bolt and the drag brace bolt to be easily removed and will allow the blade to be removed from the blade grip without spreading the ears of the grip.

A. Remove the bolt (1) securing the drag link to the rotor blade.

B. Remove the blade retention bolt (2).

C. Carefully slide the blade from the grip.

D. Place the blade into a blade rack or on a suitable device that will prevent the blades from being damaged.

E. Repeat the process for the other 2 blades.

UNCONTROLLED COPY WHEN DOWNLOADED OR PRINTED

Visit www.enstromhelicopter.com for instructions to order an original manual and to register for email notification of updates.

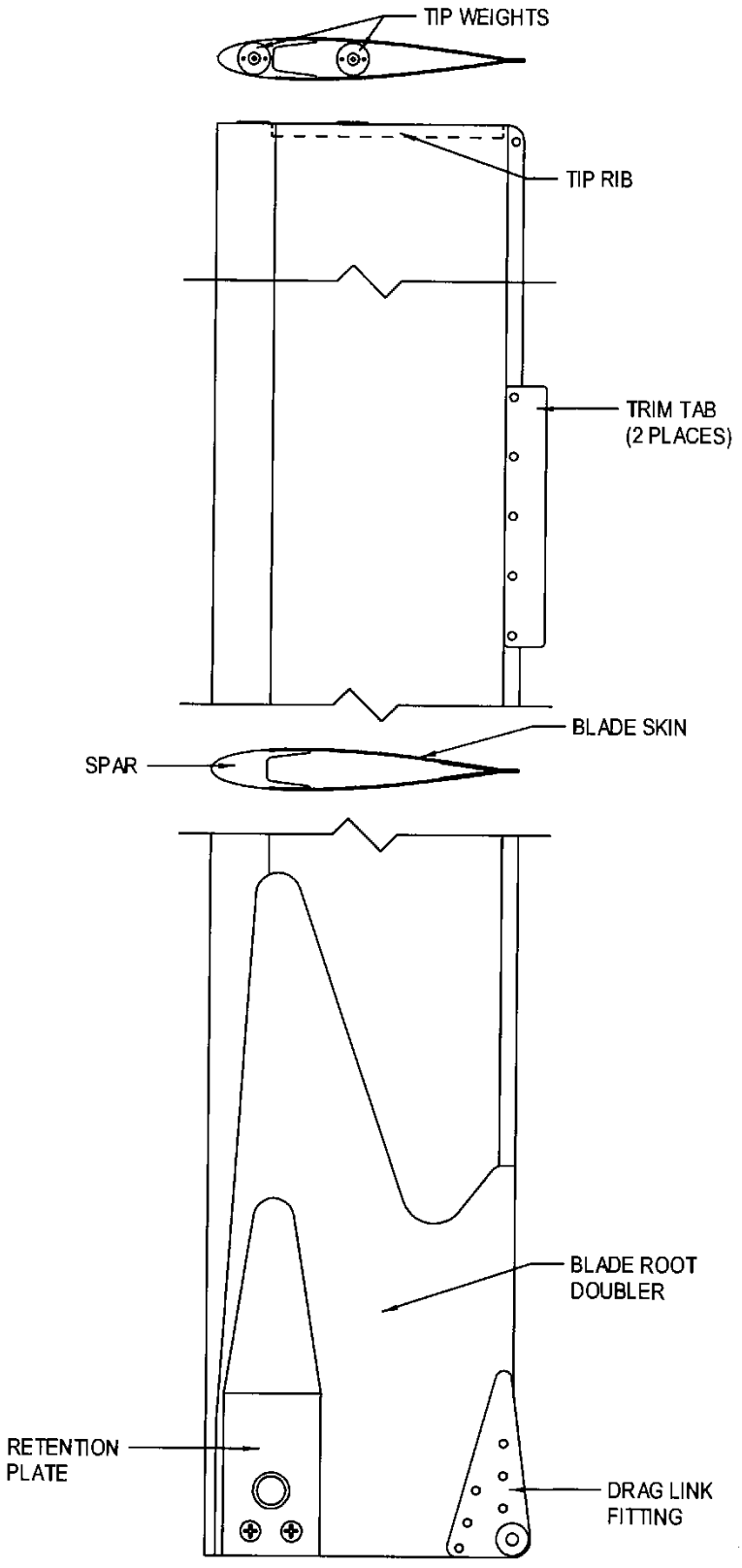

Figure 9-16. Main Rotor Blade

UNCONTROLLED COPY WHEN DOWNLOADED OR PRINTED

Visit www.enstromhelicopter.com for instructions to order an original manual and to register for email notification of updates.

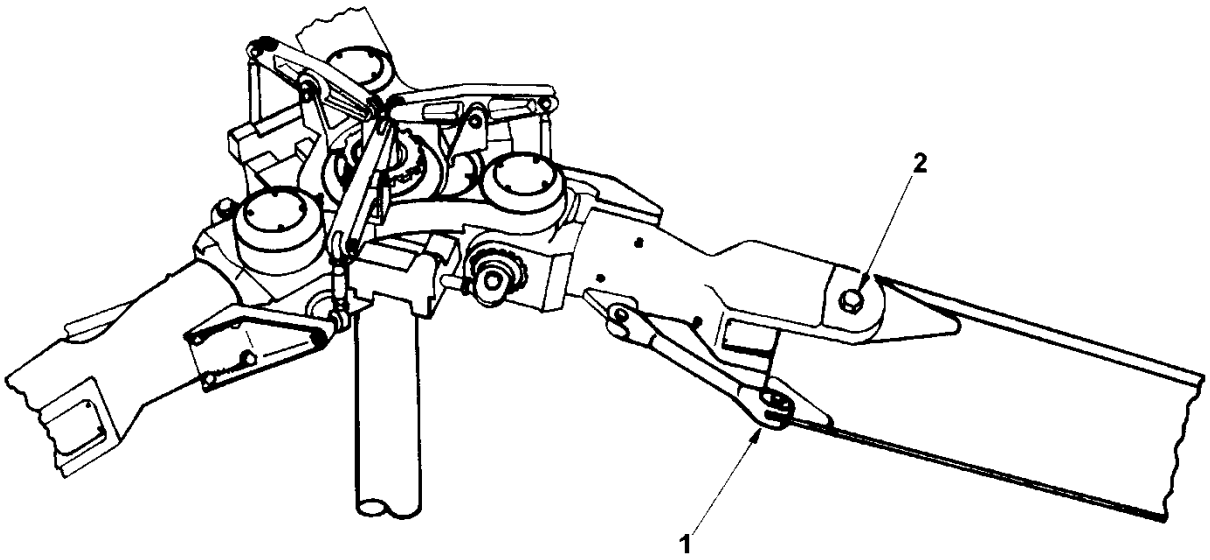

Figure 9-17. Main Rotor Blade Installation

UNCONTROLLED COPY WHEN DOWNLOADED OR PRINTED

Visit www.enstromhelicopter.com for instructions to order an original manual and to register for email notification of updates.

9-9 Inspection – Main Rotor Blades

A. Inspect the paint finish of the blades for blistering, erosion, cracking, chipping, peeling, and overall oxidation.

B. Inspect the main rotor blade spar (especially on blades that have erosion of the paint finish) for slivering or flaking of the exposed spar surface, and for a grainy surface appearance (Figure 9-19).

C. Inspect the spar bond lines for raised sections or voids, dark deposits, corrosion, and bubbly or scaly paint (Figure 9-20). Use the coin tap method to inspect suspect areas for voids.

D. Inspect the trailing edge bond lines for voids or openings, dark deposits, corrosion, and bubbly or scaly paint (Figure 9-20). Use the coin tap method to inspect suspect areas for voids. Use only plastic shim stock (.001"/.025 mm) for determining the depth of voided areas.

E. Inspect the bond lines at the root doubler and retention plate edges for paint cracking or scaling, dark deposits, corrosion, and void in the fairing compound (Figure 9-20). Use the coin tap method to inspect suspect areas for voids. Use only plastic shim stock (.001"/.025mm) for determining the depth of the voided areas.

F. Inspect the main rotor blade spar (Figure 9-21 and Figure 9-22), skins, trim tabs, retention plates, drag link fittings, and root doublers for nicks, scratches, dents, and cracks.

G. Inspect the blade tip rib, trim tabs and drag link fittings for loose rivets.

NOTE: Normal service life for the blade tape is 200 - 300 hours: however, if the aircraft is operated in rain, service life for the tape can be considerably shortened.

NOTE: Visually inspect the blade tape for security and damage after the aircraft is operated in rain.

H. If installed, inspect the main rotor leading edge blade tape for security of installation, tears or punctures, and bubbles or lumpy surface.

UNCONTROLLED COPY WHEN DOWNLOADED OR PRINTED

Visit www.enstromhelicopter.com for instructions to order an original manual and to register for email notification of updates.

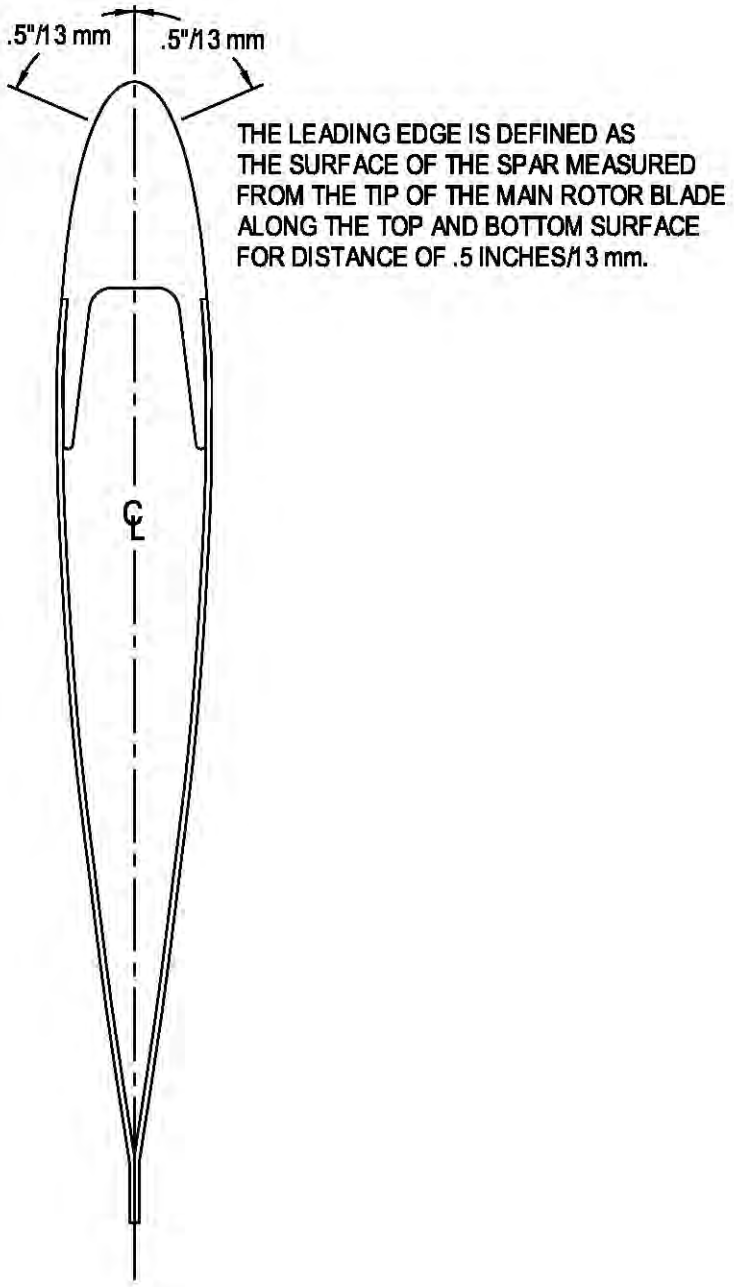

Figure 9-18. Main Rotor Blade Leading Edge Definition

UNCONTROLLED COPY WHEN DOWNLOADED OR PRINTED

Visit www.enstromhelicopter.com for instructions to order an original manual and to register for email notification of updates.

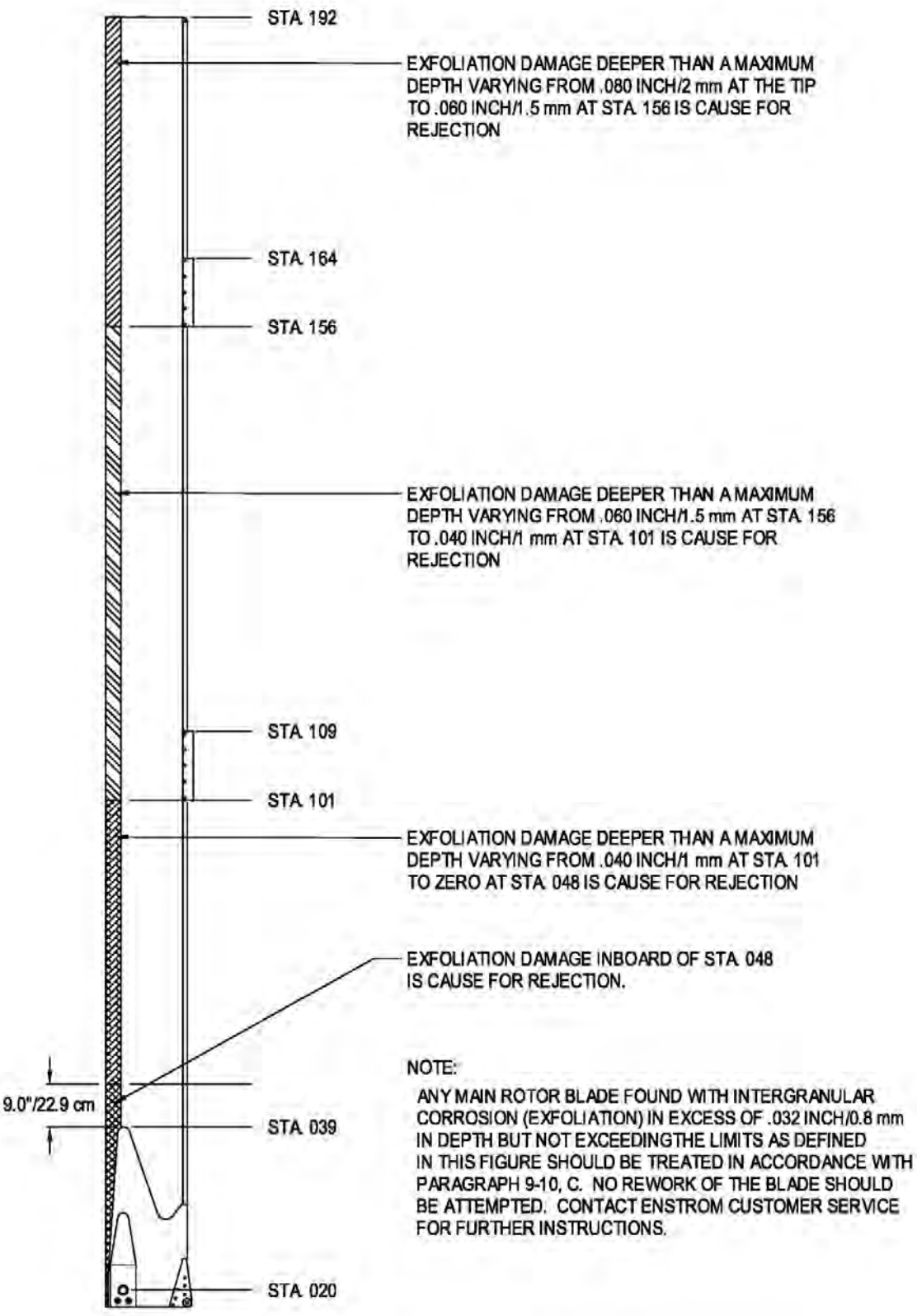

Figure 9-19. Main Rotor Blade Spar Corrosion Limits

UNCONTROLLED COPY WHEN DOWNLOADED OR PRINTED

Visit www.enstromhelicopter.com for instructions to order an original manual and to register for email notification of updates.

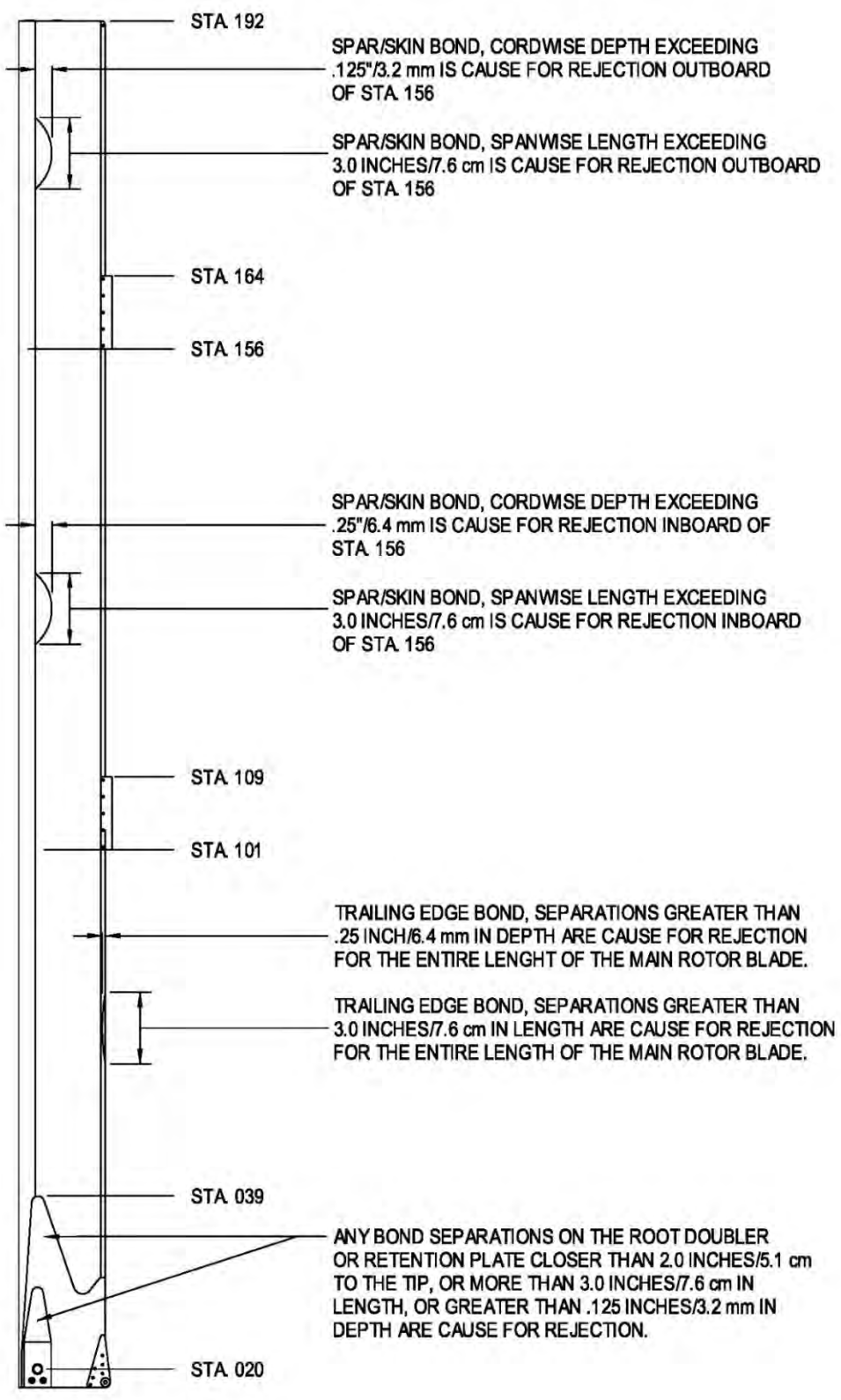

Figure 9-20. Main Rotor Blade Bond Separation Limits

UNCONTROLLED COPY WHEN DOWNLOADED OR PRINTED

Visit www.enstromhelicopter.com for instructions to order an original manual and to register for email notification of updates.

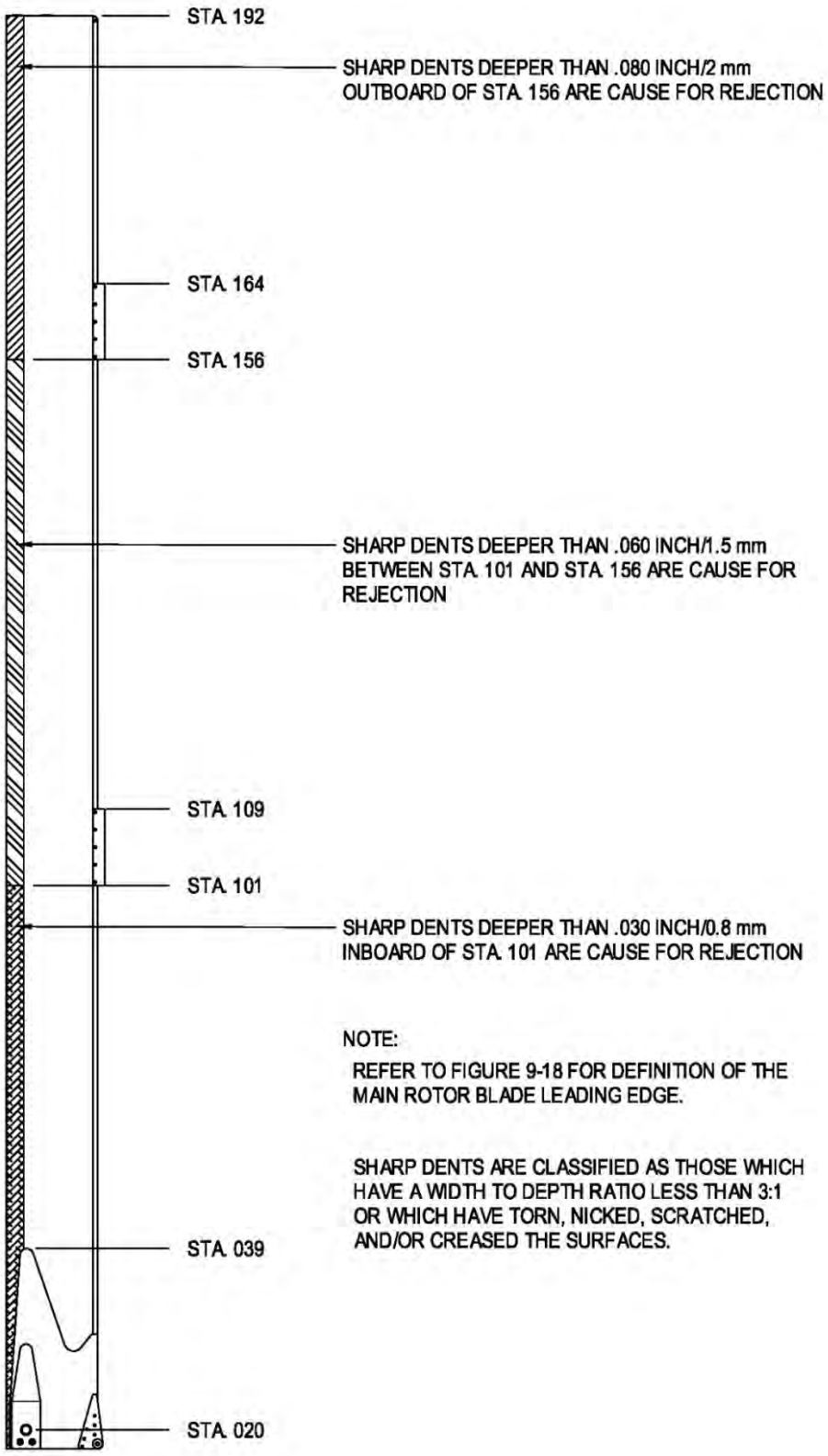

Sheet 1 of 2

Figure 9-21. Main Rotor Blade Leading Edge Damage Limits

UNCONTROLLED COPY WHEN DOWNLOADED OR PRINTED

Visit www.enstromhelicopter.com for instructions to order an original manual and to register for email notification of updates.

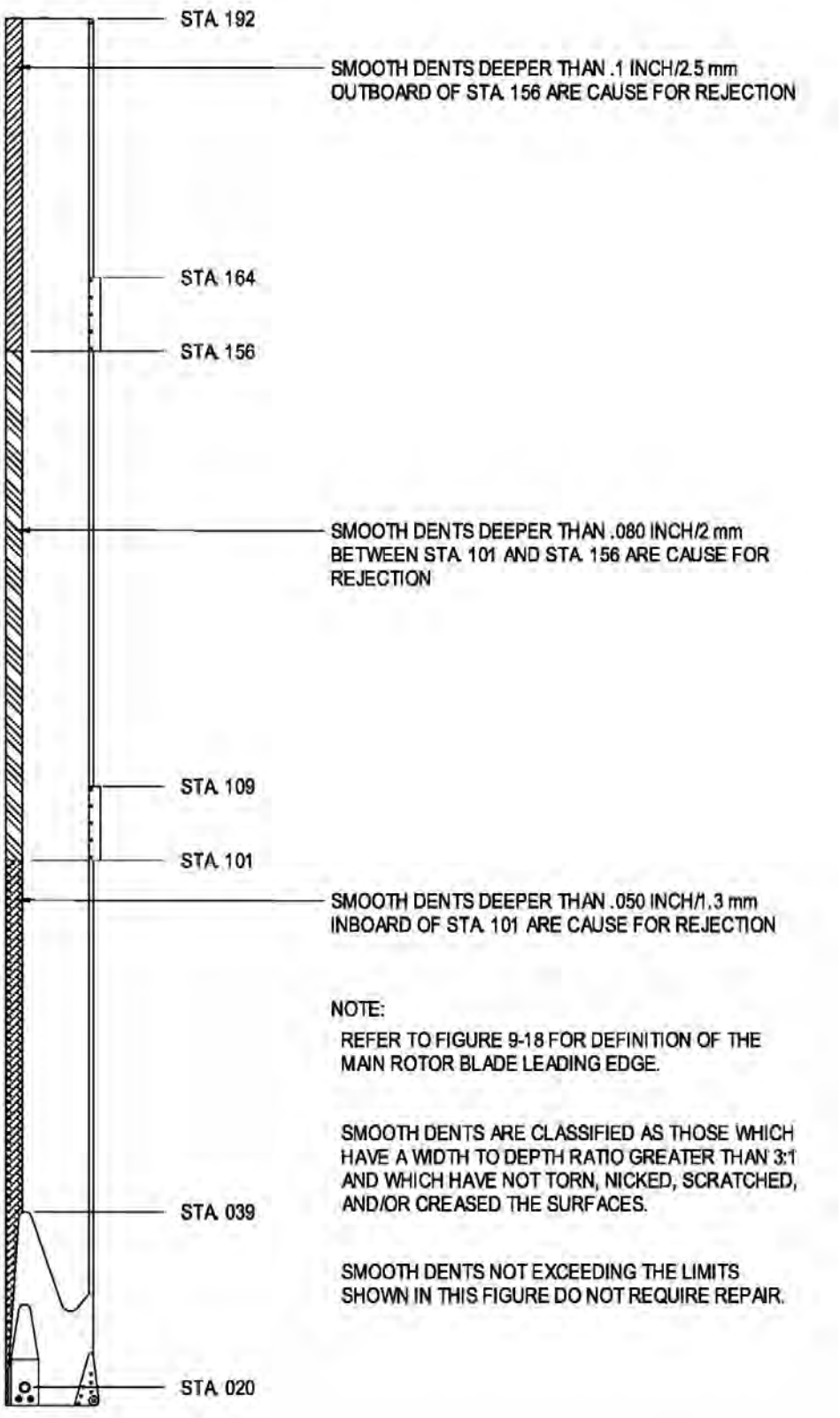

Sheet 2 of 2

Figure 9-21. Main Rotor Blade Leading Edge Damage Limits

UNCONTROLLED COPY WHEN DOWNLOADED OR PRINTED

Visit www.enstromhelicopter.com for instructions to order an original manual and to register for email notification of updates.

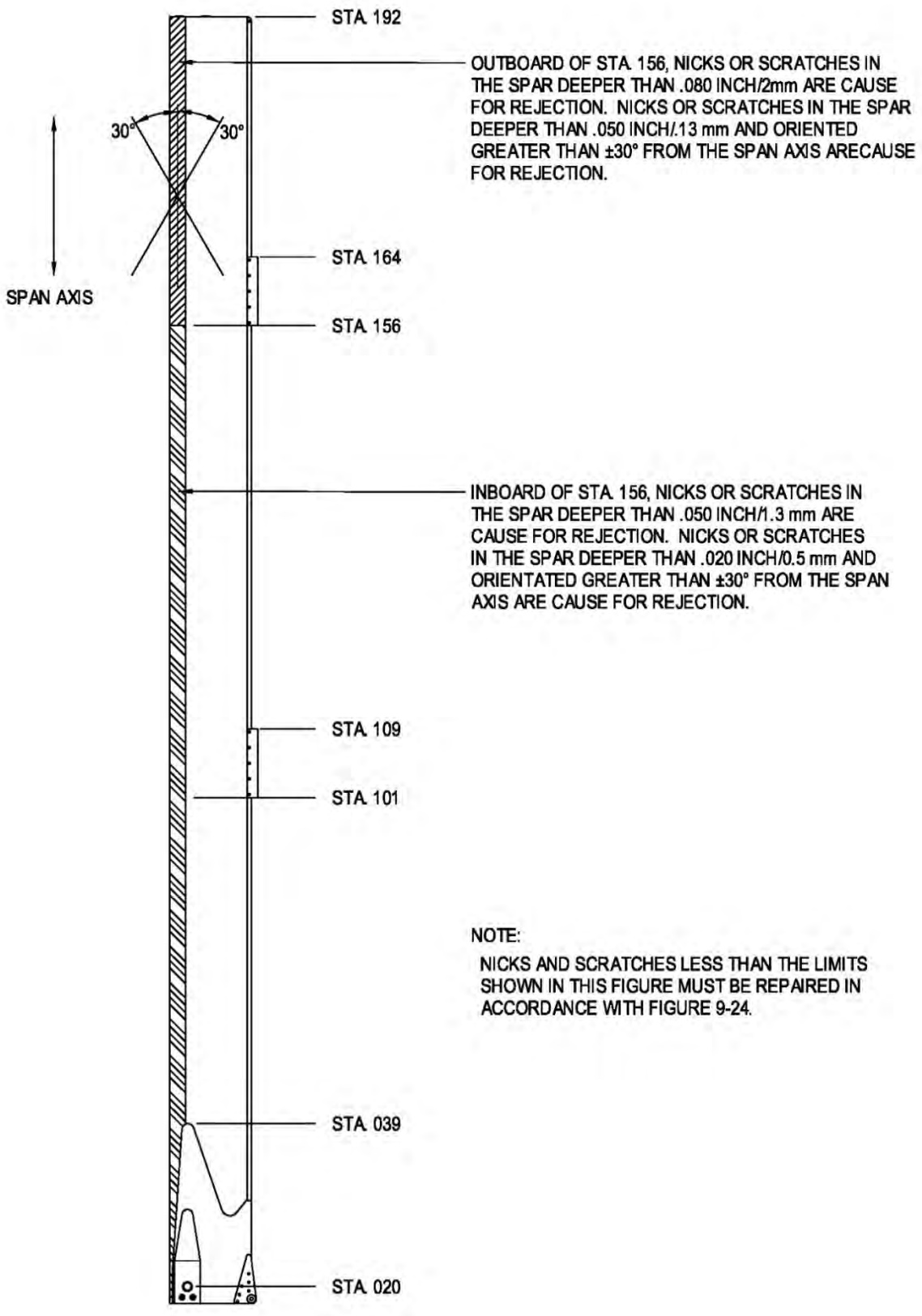

Figure 9-22. Main Rotor Blade Spar Damage Limits

UNCONTROLLED COPY WHEN DOWNLOADED OR PRINTED

Visit www.enstromhelicopter.com for instructions to order an original manual and to register for email notification of updates.

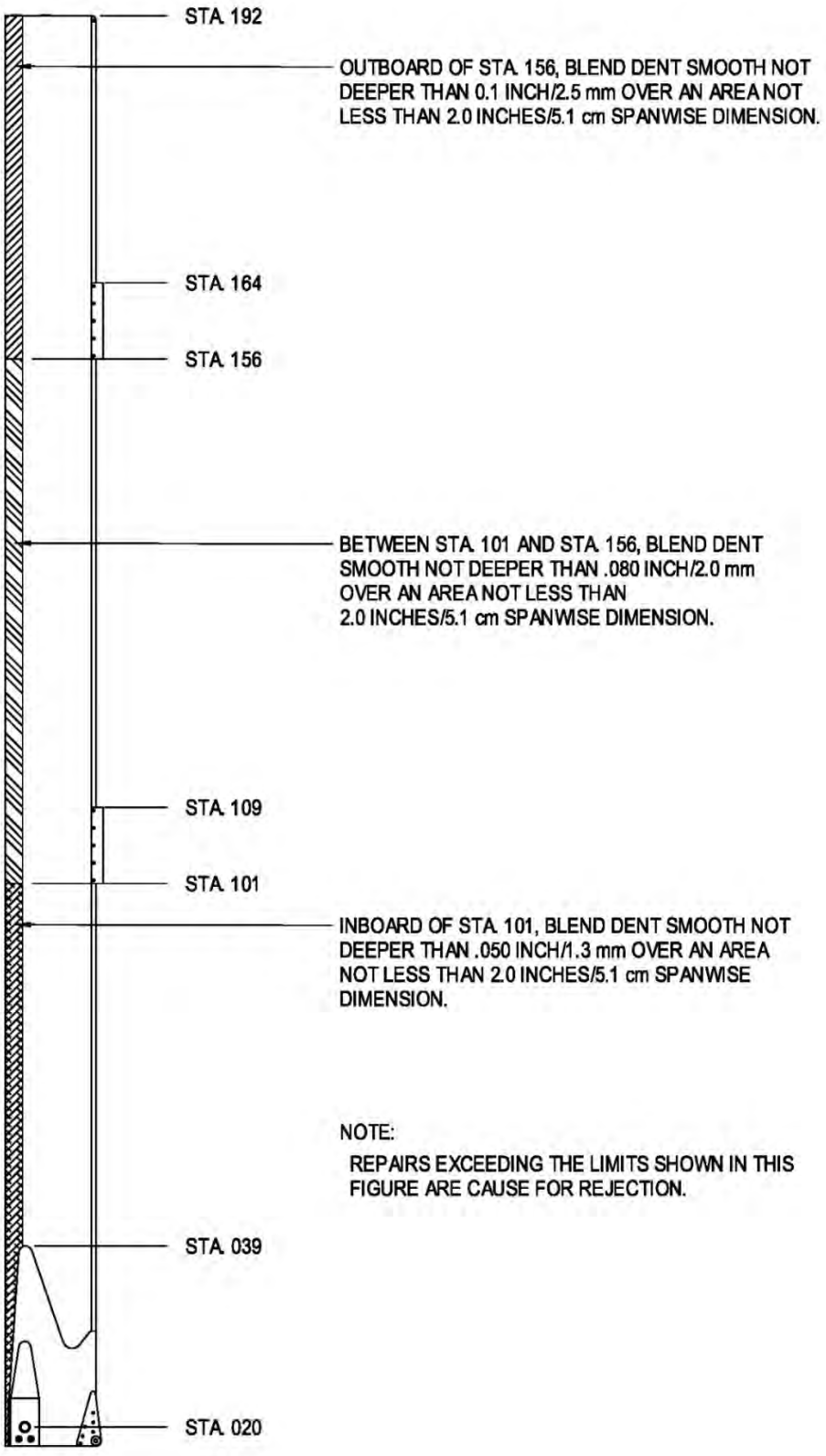

Figure 9-23. Main Rotor Blade Leading Edge Repair Limits

UNCONTROLLED COPY WHEN DOWNLOADED OR PRINTED

Visit www.enstromhelicopter.com for instructions to order an original manual and to register for email notification of updates.

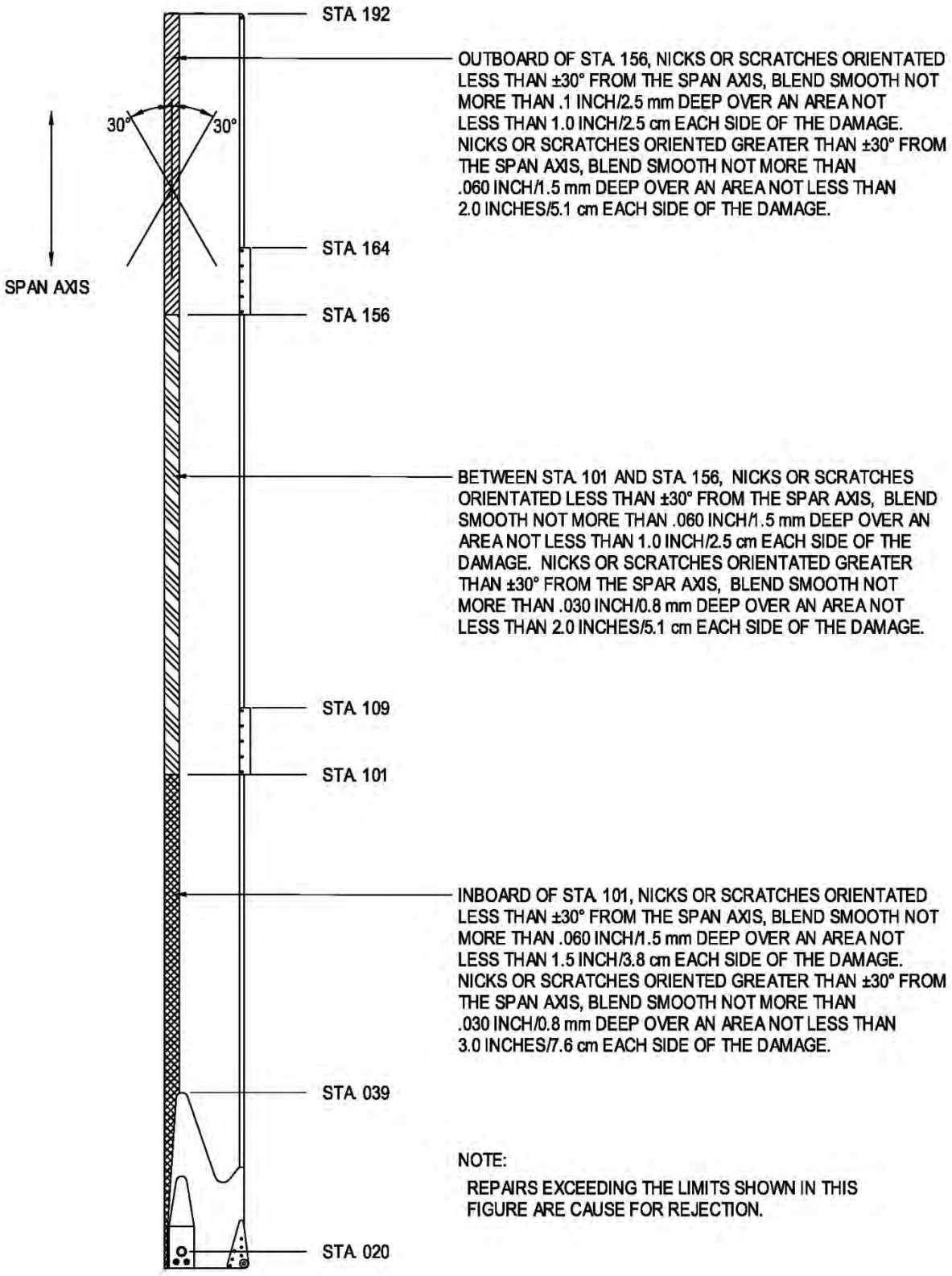

Figure 9-24. Main Rotor Blade Spar Repair Limits

UNCONTROLLED COPY WHEN DOWNLOADED OR PRINTED

Visit www.enstromhelicopter.com for instructions to order an original manual and to register for email notification of updates.

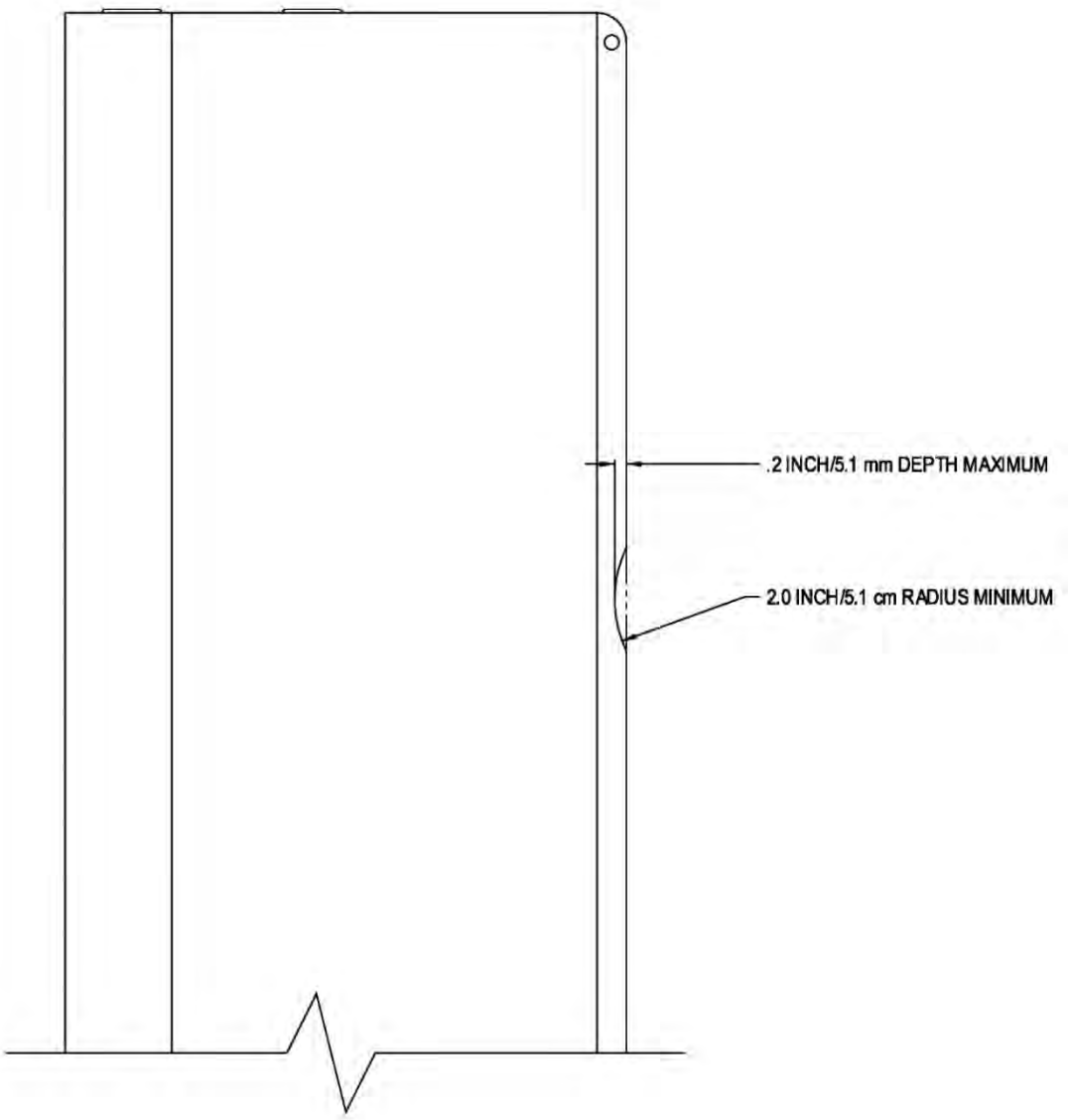

Figure 9-25. Main Rotor Blade Trailing Edge Repair Limits

UNCONTROLLED COPY WHEN DOWNLOADED OR PRINTED

Visit www.enstromhelicopter.com for instructions to order an original manual and to register for email notification of updates.

9-10 Repair – Main Rotor Blades

A. Repair small areas of the paint finish using the following:

NOTE: Refinish the blades equally if refinishing a larger area (outboard leading edge for example) to maintain the continuity of the weight between the blades.

(1) Work the area lightly with medium grit aluminum oxide abrasive paper/cloth.

(2) Wash the area with mild soap and water.

WARNING: ACETONE AND METHYLETHYLKETONE (MEK) ARE TOXIC AND MUST BE USED WITH EXTREME CAUTION. MAKE SURE ADEQUATE VENTILATION IS PROVIDED. REPEATED OR PROLONGED CONTACT WITH THE SKIN SHOULD BE AVOIDED. A LOW-VOLATILE SUBSTITUTE, SUCH AS EXTREME SIMPLE GREEN, IS A PREFERRED SOLVENT.

(3) Degrease the area with denatured alcohol, Extreme Simple Green, or equivalent.

NOTE: Application of the chemical conversion coating is only required if the bare metal is exposed on the main rotor blade.

WARNING: USE THE PROPER PROTECTIVE EQUIPMENT WHEN WORKING WITH THE METAL PREP. OBSERVE THE PRECAUTIONARY INFORMATION AND INSTRUCTIONS PROVIDED WITH THE METAL PREP.

(4) Treat the repaired area of the blade with a metal prep. Flush thoroughly with fresh water and allow to dry.

WARNING: USE THE PROPER PROTECTIVE EQUIPMENT WHEN WORKING WITH THE CHEMICAL CONVERSION COATING. OBSERVE THE PRECAUTIONARY INFORMATION AND INSTRUCTIONS PROVIDED WITH THE CHEMICAL CONVERSION COATING.

(5) Treat the blade as required with a chemical conversion coating complying with MIL-DTL-5541/MIL-DTL-81706 or equivalent.

(6) Clean the area with Extreme Simple Green, or equivalent.

(7) Apply a coat of Desoto # 593 X 300 epoxy primer or equivalent and allow to dry.

(8) Finish the area with a flat acrylic aerosol paint.

B. Repair blade spars with flaking or slivering less than .032"/0.8 mm in depth or a light grainy surface as follows:

NOTE: Contour the reworked area evenly along the blade and rework the blade set equally to maintain the blade weight continuity of the blade set.

NOTE: Use care when removing the corrosion contamination to prevent from contaminating other areas or blades.

UNCONTROLLED COPY WHEN DOWNLOADED OR PRINTED

Visit www.enstromhelicopter.com for instructions to order an original manual and to register for email notification of updates.

(1) Remove the surface corrosion from the area using medium grit aluminum oxide abrasive paper/cloth or an aluminum oxide flapping wheel.

(2) Wash the reworked area thoroughly with mild soap and water, flush thoroughly.

WARNING: USE THE PROPER PROTECTIVE EQUIPMENT WHEN WORKING WITH THE METAL PREP. OBSERVE THE PRECAUTIONARY INFORMATION AND INSTRUCTIONS PROVIDED WITH THE METAL PREP.

(3) Treat the repaired area of the blade with a metal prep. Flush thoroughly with fresh water and allow to dry.

WARNING: USE THE PROPER PROTECTIVE EQUIPMENT WHEN WORKING WITH THE CHEMICAL CONVERSION COATING. OBSERVE THE PRECAUTIONARY INFORMATION AND INSTRUCTIONS PROVIDED WITH THE CHEMICAL CONVERSION COATING.

(4) Treat the blade as required with a chemical conversion coating complying with MIL-DTL-5541/MIL-DTL-81706 or equivalent.

(5) Refinish the area either using the small area repair in Para. 9-10, A, or if the entire blade needs refinishing, use Para. 9-11.

CAUTION: REFINISHED TAIL ROTOR BLADES WILL BE REQUIRED TO BE STATICALLY AND DYNAMICALLY REBALANCED. REFINISHED MAIN ROTOR BLADES WILL REQUIRE RETRACKING THE MAIN ROTOR SYSTEM. REFER TO PARAGRAPH 12-2. CONTACT ENSTROM PRODUCT SUPPORT ABOUT THE AVAILABILITY OF A MAIN ROTOR BALANCE TOOL TO AID BLADE REBALANCING IF TRACKING PROBLEMS OCCUR AFTER BLADE REFINISHING WORK.

C. Repair blade spars with flaking or slivering exceeding .032"/0.8 mm in depth but not the limits in Figure 9-19 as follows:

(1) Apply corrosion inhibitor to the affected area daily.

(2) Contact the Enstrom Customer Service Department for further instructions.

NOTE: Main rotor blades with intergranular spar corrosion (exfoliation) exceeding the limits of Figure 9-19 must be rejected as unairworthy.

D. Repair voids in the spar to skin bond lines that do not exceed the limits of Figure 9-20 as follows:

NOTE: Bond separations (voids) in the main rotor blade bond joints cannot be repaired/rebonded. The following repair provides corrosion treatment and sealing of the voided area until the void exceeds the allowable limits and the main rotor blade must be rejected as unairworthy.

(1) Remove the paint and or surface corrosion from the voided area with aluminum oxide abrasive paper.

(2) Degrease the area with denatured alcohol, Extreme Simple Green, or equivalent.

CAUTION: DO NOT HEAT THE BOND LINE TO MORE THAN 250°F/121°C.

UNCONTROLLED COPY WHEN DOWNLOADED OR PRINTED

Visit www.enstromhelicopter.com for instructions to order an original manual and to register for email notification of updates.

(3) Warm the area to approximately 180-200°F/82-93°C to evacuate any residual moisture.

(4) Apply corrosion inhibitor and allow to dry for 30 minutes.

(5) Wipe the area with denatured alcohol, Extreme Simple Green, or equivalent.

(6) Seal the area with Hysol Type EA 9309.2NA epoxy sealant.

(7) Refinish the area in accordance with Para. 9-10, A, above or Para. 9-11 depending on the paint condition of the rest of the blade.

CAUTION: REFINISHED TAIL ROTOR BLADES WILL BE REQUIRED TO BE STATICALLY AND DYNAMICALLY REBALANCED. REFINISHED MAIN ROTOR BLADES WILL REQUIRE RETRACKING THE MAIN ROTOR SYSTEM. REFER TO PARAGRAPH 12-2. CONTACT ENSTROM PRODUCT SUPPORT ABOUT THE AVAILABILITY OF A MAIN ROTOR BALANCE TOOL TO AID BLADE REBALANCING IF TRACKING PROBLEMS OCCUR AFTER BLADE REFINISHING WORK.

(8) Enter into the maintenance log book the main rotor blade serial number and the location of the repair.

(9) Visually inspect the repaired area for further growth of the bond separation during the preflight check or daily inspection. Inspect the repaired area for further growth of the bond separation using the coin tap method at 25 hour intervals.

E. Repair voids in the trailing edge bond lines not exceeding the limits in Figure 9-20 using the procedure in Para. 9-10, D, except for the following:

(1) Inspect repairs outboard of Sta. 101 using the coin tap method at the normal periodic inspection interval.

(2) Inspect repairs inboard of Sta. 101 using the coin tap method at 25 hour intervals.

F. Repair voids in the root doubler and retention plate edge bond lines not exceeding the limits in Figure 9-20 using the procedure in Para. 9-10, D.

G. Damage to the blade spar not exceeding the limits in Figures 9-21 and Figure 9-22 must be repaired I/A/W Figure 9-23 and Figure 9-24. Reject any blades that have damage exceeding the limits in Figures 9-21 and Figure 9-22.

H. Reject blades with the following blade skin damage:

(1) Punctures in the blade skin.

(2) Sharp dents with a width to depth ratio less than 3:1 and deeper than .020"/.51 mm.

(3) Smooth dents which have resulted in permanent skin deformation greater than .060"/1.5 mm in depth.

(4) Nicks and scratches in the cordwise direction greater than .010"/.25 mm in depth.

(5) Nicks and scratches orientated within ± 30° of the spanwise direction greater than .020"/.51 mm in depth.

UNCONTROLLED COPY WHEN DOWNLOADED OR PRINTED

Visit www.enstromhelicopter.com for instructions to order an original manual and to register for email notification of updates.

(6) Trailing edge cordwise dents or nicks deeper than .20"/5.1 mm.

(7) Trailing edge flapwise kinks extending more than .20"/5.1 mm.

(8) Cracks.

I. Repair blade skins with damage not exceeding the limits in Para. 9-10, H, above as follows:

(1) Buff out all light scratches.

(2) Polish out nicks, scratches, and sharp dents and blend the area to approximately .50"/13 mm around the damaged area.

(3) Repair damage to the trailing edge in accordance with Figure 9-25.

(4) Smooth dents that do not exceed the damage limits are acceptable and no repair is required.

NOTE: Refinish the repaired area in accordance with Para. 9-10, A, or Para. 9-11 depending on the condition of the rest of paint finish.

J. Reject blades with the following root doubler damage:

(1) Nicks, scratches, and sharp dents in the cordwise direction greater than .010"/.25 mm in depth.

(2) Nicks, scratches, and sharp dents orientated within ± 30° of the spanwise direction greater than .020"/.51 mm in depth.

(3) Smooth dents deeper than .020"/.51 mm.

(4) Cracks.

K. Repair blade doublers with damage not exceeding the limits in Para. 9-10, J, as follows:

(1) Buff out all light scratches.

(2) Polish out nicks, scratches, and sharp dents and blend the area to approximately .50"/13 mm around the damaged area.

(3) Smooth dents that do not exceed the damage limits are acceptable and no repair is required.

NOTE: Refinish the repaired area I/A/W Para. 9-10, A, or Para. 9-11 depending on the condition of the rest of paint finish.

L. Reject blades with the following blade retention plate damage:

(1) Nicks, scratches, and sharp dents greater than .050"/1.3 mm in depth.

(2) Cracks.

UNCONTROLLED COPY WHEN DOWNLOADED OR PRINTED

Visit www.enstromhelicopter.com for instructions to order an original manual and to register for email notification of updates.

M. Repair blade retention plates with damage not exceeding the limits in Para. 9-10, L, as follows:

(1) Buff out all light scratches.

(2) Polish out nicks, scratches, and sharp dents and blend the area to approximately 2.0"/5.1 cm diameter area.

NOTE: Refinish the repaired area I/A/W Para. 9-10, A, or Para. 9-11 depending on the condition of the rest of paint finish.

NOTE: Do not paint the blade grip mating surface of the retention plates.

N. Repair or replace trim tabs as follows:

(1) Repair:

(a) Flatten dents or kinks and polish out scratches and nicks.

(b) Drill out and replace loose rivets.

(2) Replace:

(a) Drill out rivets and remove the trim tab.

(b) Open pilot holes in the replacement trim tab with a #40 drill.

(c) Position the trim tab on the main rotor blade and install the rivets.

O. Reject blades with the following drag link fitting damage:

(1) Nicks or scratches greater than .010"/.25 mm deep.

(2) Cracks.

(3) Loose rivets.

P. Repair drag link fittings with damage not exceeding the limits in Para. 9-10, O, as follows:

(1) Buff out all light scratches.

(2) Polish out nicks, scratches, and sharp dents.

NOTE: Refinish the repaired area I/A/W Para. 9-10, A, or Para. 9-11 depending on the condition of the rest of paint finish.

NOTE: Do not paint the drag link mating surface of the drag link fittings.

UNCONTROLLED COPY WHEN DOWNLOADED OR PRINTED

Visit www.enstromhelicopter.com for instructions to order an original manual and to register for email notification of updates.

Q. Reject blades that have a cracked tip rib. Replace loose rivets.

R. Install the leading edge blade tape as follows (for blade tape repairs, go to step S):

NOTE: Prior to installation of the blade tape, the spar should be inspected according to Para. 9-9, B.

CAUTION: NEW BLADE TAPE SHOULD NOT BE INSTALLED WITHOUT PROPER LEADING EDGE PREPARATION AND PAINT COVER (PARA. 9-10, A OR B). DO NOT INSTALL BLADE TAPE ON BLADES WITH LEADING EDGE/SPAR CORROSION WITHOUT FIRST TREATING THE CORROSION.

(1) Clean the blade with a mild soap and water solution, and rinse with fresh water.

(2) Allow the blade to dry.

(3) Coat the area to be taped with MIL-PRF-23377 epoxy primer or equivalent or quality top coat paint such as Sherwin-Williams “Acry Glo” or similar.

(4) Mark and mask the non-blade tape area as follows:

NOTE: The blade surface area adjacent to the taped area must be masked to avoid sanding the non-taped area.

(a) Measure 108.4” from the end of the blade tip, mark with a pencil, and apply masking tape at this measurement from the spar edge to at least 0.100” beyond the spar seam. Measure, mark, and mask the bottom side of the blade as well.

(b) Apply masking tape along the blade length from the blade tip to the pencil marks at a distance of 0.100” from the spar seam.

(5) Sand the exposed area to be taped with 400 grit sand paper or Scotch Brite 7447B to produce a smooth surface. Remove the masking tape after sanding is completed.

NOTE: The blade tape is installed in three 36-inch long sections.

(6) Mark the area for blade tape as follows:

(a) Measure a distance of 0.100” from the blade tip. This marks the start of the blade tape.

(b) Measure a distance of 108.4” from the blade tip. This marks the end of the blade tape.

(c) Measure from the leading edge of the blade back on the topside of the airfoil ½ the distance of the width of the tape (2 ½ inches) and mark the surface with a pencil. Do this at the tip of the blade and toward the root end of the blade at the 108.4” mark.

(7) Above the marks, stretch a length of masking tape from the blade tip to the 108.4” mark to create a straight reference line.

UNCONTROLLED COPY WHEN DOWNLOADED OR PRINTED

Visit www.enstromhelicopter.com for instructions to order an original manual and to register for email notification of updates.

(8) Butt the top edge of three 8681HS tape sections against the masking tape reference line applied in step (7) above and use 1 inch long tabs of masking tape to hold it in place. Maintain a 0.100” gap between each section of 8681HS tape.

(9) Apply another 1 inch wide strip of masking tape along the entire top edge of the 8681HS tape to form a soft hinge (Figure 9-26, a).

(10) Fold the 8681HS tape back onto the top of the blade (Figure 9-26, b).

(11) Apply 3M Adhesion Promoter # 86A to the entire area that will be covered by 8681HS tape. Use pre-wetted wipes or the adhesion promoter P/N 86 A and clean cheese cloth to apply the 86A and rubber gloves to protect hands. Apply only enough to wet the surface, so it appears shiny. Wipe off any excess to ensure no runs or drips. Allow to dry for 10 to 20 minutes or until the surface does not appear shiny.

(12) Spray the surface of the treated area of the blade with a previously prepared solution of water, isopropyl alcohol, and detergent.

(a) Solution: Mix 70% water with 30% isopropyl alcohol in a 1 pint spray bottle. Add 4 drops of a non-ionic detergent such as Joy brand dish detergent.

(13) Beginning at the edge of the blade tape, remove the first protective liner strip from the blade tape nearest the soft hinge. Spray the sticky side of the tape with solution from step 12(a). There are four protective liner strips for each 36-inch long section. Fold the tape down onto the blade and allow it to float into its favored location (Figure 9-26, c).

(14) Use a soft plastic squeegee to force the liquid out from behind the tape, starting at the hinge corner and working forward (Figure 9-26, d). Carefully work to end of the tape section. Repeat steps (13) and (14) for the remaining three protective liner strips.

(a) Avoid touching the exposed adhesive tape surface.

(b) Use a dry towel to mop up excess solution on the back edge.

(c) Carefully work around the leading edge and around toward the trailing of the tape on the other side.

(d) If a bubble of liquid or air is trapped under the tape, pull the tape back up to free the bubble, re-spray the area and squeegee to make it smooth and bubble free. DO NOT puncture bubbles to relieve entrapped air or liquid, especially on the leading edge.

NOTE: A smooth, continuous taped surface is necessary for optimal blade performance.

(e) Repeat the process for the remaining two 36-inch long tape sections.

(15) Remove the “hinge” tape on the top edge and squeegee out excess fluid, while mopping excess up with a dry towel. Minute quantities of fluid which may be trapped, such as around fasteners, dissipate quickly.

UNCONTROLLED COPY WHEN DOWNLOADED OR PRINTED

Visit www.enstromhelicopter.com for instructions to order an original manual and to register for email notification of updates.

(16) Seal the space between the ends of the sheets and the trailing edges with 3M DP190 epoxy adhesive using the following procedure:

(a) Mask off both sides of the 8681HS tape approximately 1/16" from the edge with "3M Fine Line" tape.

(b) Apply sealant between the masked off area and use a stiff applicator to screed off the excess. Remove the strips of masking tape within a few minutes, before complete gelling has occurred, to allow the sealant to flow to a nice tapered edge. DP190 will gel in 90 minutes at 72°F and full cure will be achieved in about 8 hours. It will cure faster in warmer temperatures, slower in cooler temperatures. In warm weather it helps to allow the top surface to cure before turning the blade over to seal the second side so that the sealer does not form a bulge.

(c) After the sealant is cured, inspect the sealant bead at the tape joints and the trailing edge.

(17) Lightly sand excess sealant to match the blade contour.

NOTE: A sealant bead flush with the blade contour is necessary for optimal blade performance.

(a) Mask the sealant line around the area to be sanded. Lightly sand the contour using 3M 214U 80 grit and then 3M 214U 150 grit to blend the edges.

S. Repair the leading edge blade tape as follows:

CAUTION: THE BLADE MUST BE INSPECTED AND CERTIFIED TO BE IN AIRWORTHY CONDITION PRIOR TO INSTALLATION OR REPAIR OF THE TAPE. THE AREA WHERE THE TAPE WILL BE APPLIED MUST BE SMOOTH AND CLEAN. NEW BLADE TAPE SHOULD NOT BE INSTALLED WITHOUT PROPER LEADING EDGE PREPARATION AND PAINT COVER. REFER TO THE PARA. 9-10, A OR B, FOR REPAIR AND REFINISH INSTRUCTIONS PRIOR TO TAPE APPLICATION. THE AREA TO BE TAPED WILL BE COATED WITH MIL-PRF-23377 EPOXY PRIMER OR EQUIVALENT OR QUALITY TOP COAT PAINT SUCH AS SHERMAN-WILLIAMS "ACRY GLO" OR SIMILAR.

(1) Mark a line on the blade on either side of the damaged section at right angles to the edge of the tape line (Figure 9-27, a).

WARNING: USE EXTREME CARE NOT TO CUT INTO OR NICK THE BLADE UNDER THE TAPE WHEN CUTTING OUT THE DAMAGED SECTION OF TAPE. NICKING THE SPAR COULD LEAD TO CATASTROPHIC BLADE FAILURE.

(2) Use a razor blade to cut the tape along this line.

(3) Carefully remove the section of tape between the cut lines.

(4) Use a sharp blade or knife to scrape the gray epoxy edge sealer from the top and the bottom of the blade tape line. Take care not to damage the paint on the blade.

UNCONTROLLED COPY WHEN DOWNLOADED OR PRINTED

Visit www.enstromhelicopter.com for instructions to order an original manual and to register for email notification of updates.

(5) Use sandpaper (400 grit) to remove any corrosion on the blade and treat as follows:

(a) Coat blade tape repair area with MIL-PRF-23377 epoxy primer, or equivalent, or quality top coat paint such as Sherman-Williams “Acry Glo”, or similar, prior to application (Figure 9-27, b).

(6) Stretch a piece of masking tape along the forward edge of the epoxy tape sealer on the top of the blade.

(7) Cut a repair piece of tape from the 8681HS tape that is a total of 1/8 inch (.318 cm) shorter than the area of the tape that has been cut out for repair.

(8) Butt the top edge of the 8681HS tape against the forward edge of the already installed masking tape and apply a second length of masking tape along the aft edge of the patch to form a soft hinge.

(9) Fold the 8681HS tape back onto the top of the blade.

(10) Apply the 3M adhesion Promoter #86A to the entire area of the blade that will be covered by the 8681HS tape. Use pre-wetted wipes or the adhesion promoter P/N 86A applied to clean cheese cloth (use rubber gloves for protection). Apply only enough to wet the surface so it appears shiny. Wipe off any excess to ensure no runs or drips. Allow to dry for 10 to 20 minutes or until the surface does not appear shiny.

(11) Remove the protective liner from the adhesive surface of the blade tape and spray the adhesive surface of the tape and the treated area of the blade with a wetting solution of water and isopropyl alcohol (step R, (1), a).

(12) Fold the 8681HS tape down onto the blade and allow it to float into position. The top and bottom of the tape should be butted against the line where the epoxy adhesive DP190 has been scraped off. There should be approximately a 1/16 inch (.157 cm) gap between both sides of the patch and the already installed leading edge tape.

(13) Remove the “hinge tape” on the top edge and use a soft plastic squeegee to force the liquid out from behind the 8681HS tape, starting at the leading edge and working back towards the trailing edge on both the top and the bottom of the blade. Use a dry towel to mop up excess solution at the edges of the tape.

NOTE: If a bubble of liquid or air is trapped under the tape, pull the tape back up to free the bubble, re-spray the area and squeegee the tape back down to make it smooth and bubble free. DO NOT puncture bubbles to relieve entrapped air or liquid, especially on the leading edge.

(14) Seal the space between the patch and the older pre-existing leading edge tape, and the trailing edges of the patch with the DP190 epoxy adhesive using the following procedure (Figure 9-27, c):

(a) Mask off both sides of the edge of the patch, all the way around the patch, with masking tape approximately 1/16 inch (.157 cm) from the edge of the patch. Use fine line tape or equivalent.

UNCONTROLLED COPY WHEN DOWNLOADED OR PRINTED

Visit www.enstromhelicopter.com for instructions to order an original manual and to register for email notification of updates.

(b) Apply sealant between the masked off area and use a stiff applicator, or your finger, to screed off the excess sealant. Immediately remove the strips of masking tape to allow the sealant to flow to a nice tapered edge. DP190 will gel in 90 minutes at 72° and full cure will be achieved in about 8 hours. It will cure faster in warmer temperatures and slower in colder temperatures.

(15) After full cure, check the sealant to see how much bulge remains. If the bulge is higher than the sealer at the aft edge of the original tape, use a sharp blade to scrape the top of the bulge down so it is flush with the existing sealer.

UNCONTROLLED COPY WHEN DOWNLOADED OR PRINTED

Visit www.enstromhelicopter.com for instructions to order an original manual and to register for email notification of updates.

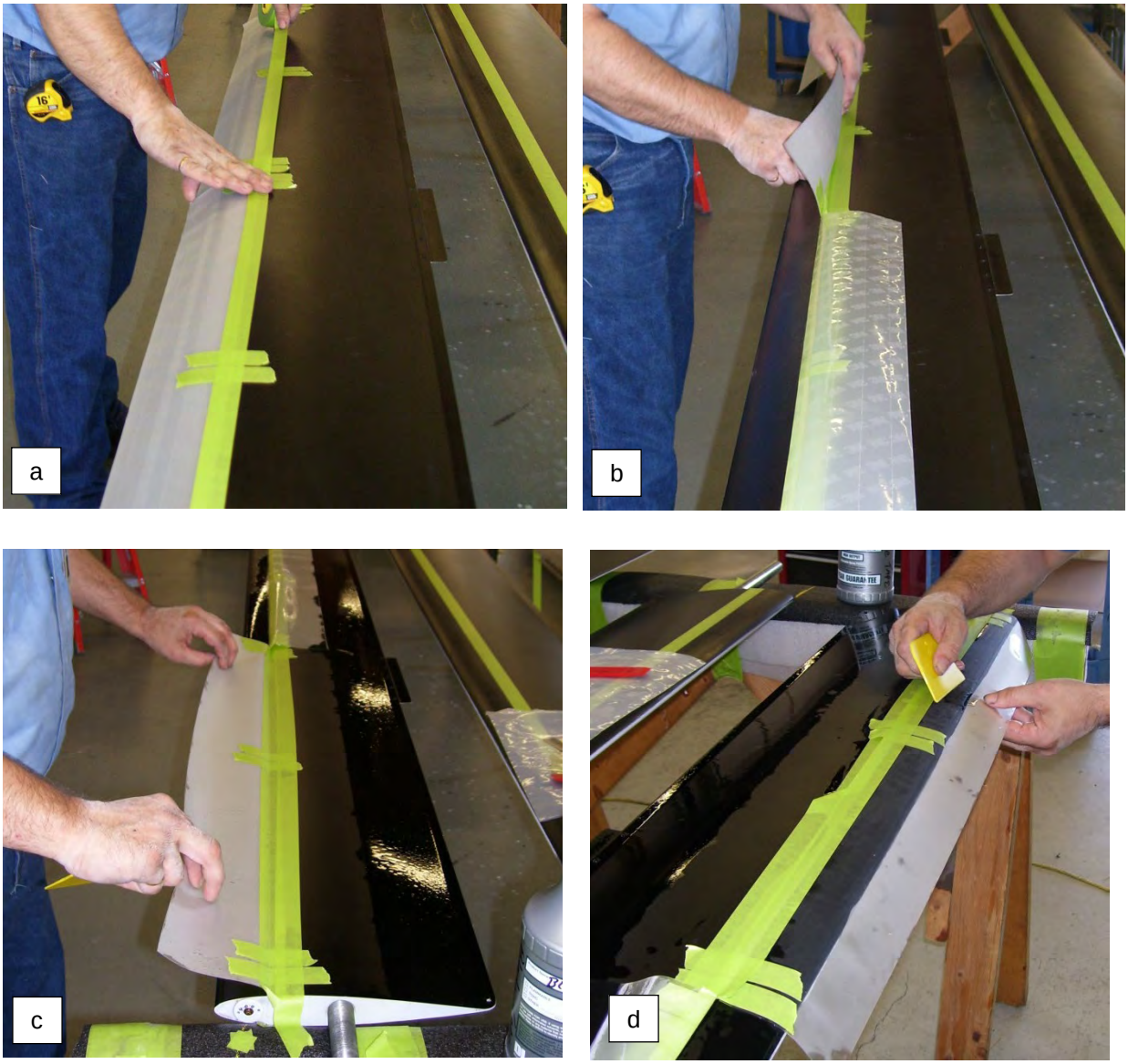

Photo a: Applying masking tape to provide the soft hinge (step 9).

Photo b: Folding the blade tape back (step 10) in preparation for blade surface treatment (steps 11 and 12).

Photo c: Positioning the blade tape for application (step 13).

Photo d: Applying blade tape to the blade top side and using a squeegee to remove liquid from under the tape as the tape is applied around the forward edge of the blade (step 14).

Figure 9-26. Blade Tape Installation

UNCONTROLLED COPY WHEN DOWNLOADED OR PRINTED

Visit www.enstromhelicopter.com for instructions to order an original manual and to register for email notification of updates.

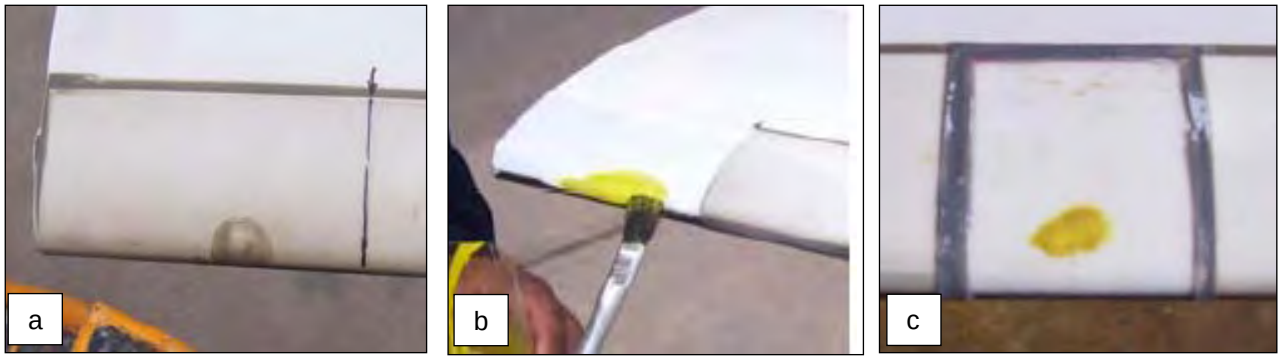

Photo a: Marking area for repair (step 1).

Photo b: Applying epoxy primer (step 5, a).

Photo c: Sealant applied to repair area (step 14).

Figure 9-27. Blade Tape Repair

UNCONTROLLED COPY WHEN DOWNLOADED OR PRINTED

Visit www.enstromhelicopter.com for instructions to order an original manual and to register for email notification of updates.

9-11 Refinishing – Main Rotor Blades

WARNING: USE THE PROPER PROTECTIVE EQUIPMENT WHEN WORKING WITH THE PAINT STRIPPER. OBSERVE THE PRECAUTIONARY INFORMATION AND INSTRUCTIONS PROVIDED WITH THE PAINT STRIPPER.

NOTE: The main rotor blades are treated with a chemical conversion coating (alodine) during the manufacturing process. Attempt to preserve the coating as much as possible during the paint removal process.

A. Apply Eldorado PR-3500 paint stripper or other suitable stripper to the blade. Remove the paint residue with a plastic (body putty) spatula when the paint starts to wrinkle. Apply additional stripper as required. Finish cleaning the main rotor blade using water and a Scotch-Brite™ Pad (7447B).

B. Inspect the blade I/A/W Para. 9-9 (tail rotor blade Para. 10-1, F).

C. Repair the blade I/A/W Para. 9-10 (tail rotor blade Para. 10-1, G).

D. Wash the blade with mild soap and water and flush thoroughly.

WARNING: USE THE PROPER PROTECTIVE EQUIPMENT WHEN WORKING WITH THE METAL PREP. OBSERVE THE PRECAUTIONARY INFORMATION AND INSTRUCTIONS PROVIDED WITH THE METAL PREP.

E. Treat the repaired area of the blade with a metal prep. Flush thoroughly with fresh water and allow to dry.

WARNING: USE THE PROPER PROTECTIVE EQUIPMENT WHEN WORKING WITH THE CHEMICAL CONVERSION COATING. OBSERVE THE PRECAUTIONARY INFORMATION AND INSTRUCTIONS PROVIDED WITH THE CHEMICAL CONVERSION COATING.

F. Treat the blade as required with a chemical conversion coating complying with MIL-DTL-5541/MIL-DTL-81706.

G. Wipe the blade with Extreme Simple Green, or equivalent using clean rags.

NOTE: Do not paint the drag link mating surface of the drag link fittings.

H. Apply DeSoto Epoxy Polyamide Primer 513 X 390 (MIL-PRF-23377) or other suitable epoxy primer as follows:

NOTE: Apply the primer in thin, even coats.

NOTE: It is important that the trailing edges of the main and tail rotor blades have good coverage.

(1) Apply two coats to the spar and feather the coats past the spar to skin bond lines. Apply two coats to the trailing edge straight on. Apply the third coat to the whole blade.

(2) The application is the same for the tail rotor blades except that the whole blade gets all three coats.

UNCONTROLLED COPY WHEN DOWNLOADED OR PRINTED

Visit www.enstromhelicopter.com for instructions to order an original manual and to register for email notification of updates.

I. Paint the finish coat with any good quality flat or satin finish polyurethane paint.

CAUTION: REFINISHING MAIN ROTOR BLADES WILL REQUIRE RETRACKING THE MAIN ROTOR SYSTEM. THE ROTOR SYSTEM MAY ALSO BE DYNAMICALLY BALANCED USING A CHADWICK BALANCING SYSTEM.

CAUTION: TIP WEIGHT CHANGES MUST BE MADE TO KEEP 75% OF THE BLADE TIP WEIGHT IN THE FORWARD POCKET TO MAINTAIN THE CORDWISE BALANCE.

CAUTION: REFINISHED TAIL ROTOR BLADES WILL BE REQUIRED TO BE STATICALLY AND DYNAMICALLY REBALANCED.

9-12 Corrosion Prevention – Main Rotor Blades

A. Refer to Para. 4-83 and Para. 4-90 for the application of corrosion prevention compound to the main rotor blades.

9-13 Installation – Main Rotor Blades (Figure 9-17)

WARNING: DO NOT ALIGN THE HOLES IN THE GRIP AND BLADE BY PLACING YOUR FINGER IN THE RETENTION BOLT HOLE.

NOTE: Lifting the tip of the blade so the blade is parallel to the retention assembly will allow easy installation of the blade into the blade grip, installation of the blade bolt, and the drag brace bolt. If desired, use the main rotor blade bolt guide bullet, T-0009, to aid installation of the blade bolts.

A. If required, apply corrosion prevention compound to each blade (Para. 4-54, 4).

B. Install the root end of the blade into the blade grip.

C. Align the retention bolt hole in the grip with the hole in the blade. Install the bolt (2), washer, and nut. Torque the nut to 600 in-lb/68.2 Nm.

D. Connect the drag link to the trailing edge of the blade and secure with the hardware (1). Torque the nut to 140 in-lb/15.9 Nm.

E. Repeat the process for the other blades.

F. Perform a maintenance test flight if maintenance was performed on the main rotor blades.

UNCONTROLLED COPY WHEN DOWNLOADED OR PRINTED

Visit www.enstromhelicopter.com for instructions to order an original manual and to register for email notification of updates.

INTENTIONALLY LEFT BLANK

UNCONTROLLED COPY WHEN DOWNLOADED OR PRINTED

Visit www.enstromhelicopter.com for instructions to order an original manual and to register for email notification of updates.

SECTION 10

TAIL ROTOR

TABLE OF CONTENTS

Paragraph		Page
10-1	**Tail Rotor Assembly**	**MM-10-3**
	A. General Description	MM-10-3
	B. Troubleshooting	MM-10-3
	C. Removal	MM-10-4
	D. Disassembly	MM-10-4
	E. Cleaning	MM-10-7
	F. Inspection	MM-10-7
	G. Repair	MM-10-7
	H. Refinishing	MM-10-9
	I. Assembly	MM-10-11
	J. Pitch Link Inspection, Repair, Assembly, and Installation	MM-10-13
	K. Installation	MM-10-17
10-2	**Static Balance**	**MM-10-25**
	A. Balance Procedure	MM-10-25
10-3	**Tracking and Dynamic Balance**	**MM-10-27**
	A. Tracking and Balancing Equipment Installation	MM-10-27
	B. Tail Rotor Balance Procedure	MM-10-29
	C. Clock Angle Correction Procedure	MM-10-31
	D. Teeter Trunnion Shimming Procedure	MM-10-36
10-4	**Tail Rotor Pitch Control Assembly**	**MM-10-37**
	A. Removal	MM-10-37
	B. Disassembly	MM-10-37
	C. Inspection	MM-10-39
	D. Assembly	MM-10-39
	E. Installation	MM-10-40
10-5	**Tail Rotor Gearbox**	**MM-10-45**
	A. General Description	MM-10-45
	B. Troubleshooting	MM-10-45
	C. Removal	MM-10-45
	D. Inspection	MM-10-46
	E. Installation	MM-10-46
	F. Input Seal Replacement	MM-10-47
	G. Output Seal Replacement	MM-10-49
	H. Output Shaft Runout	MM-10-51
10-5.1	**Tail Rotor Gearbox Chip Detector**	**MM-10-52**
	A. Removal	MM-10-52
	B. Installation	MM-10-52
10-6	**Tail Rotor Driveshaft**	**MM-10-54**
	A. Alignment	MM-10-54
	B. Removal	MM-10-55
	C. Disassembly	MM-10-55
	D. Inspection	MM-10-56
	E. Installation	MM-10-56

UNCONTROLLED COPY WHEN DOWNLOADED OR PRINTED

Visit www.enstromhelicopter.com for instructions to order an original manual and to register for email notification of updates.

SECTION 10

TAIL ROTOR

TABLE OF CONTENTS – CONTINUED (PAGE MM-10-2)

Paragraph		Page
10-6.1	**Tail Rotor Driveshaft Flex Coupling**	**MM-10-60**
	A. General Information	MM-10-60
	B. Removal	MM-10-60
	C. Inspection	MM-10-60
	D. Installation	MM-10-61
10-6.2	**Tail Rotor Driveshaft Pillow Block**	**MM-10-65**
	A. Disassembly	MM-10-65
	B. Inspection	MM-10-65
	C. Assembly	MM-10-65
10-6.3	**Tail Drive Pulley Guard**	**MM-10-65**
	A. Modification	MM-10-65
10-7	**Tail Rotor Control System**	**MM-10-67**
	A. Tension Adjustment	MM-10-67
	B. Rigging	MM-10-67
10-8	**Tail Rotor Control Cables**	**MM-10-70**
	A. Inspection	MM-10-70
	B. Replacement	MM-10-71

UNCONTROLLED COPY WHEN DOWNLOADED OR PRINTED

Visit www.enstromhelicopter.com for instructions to order an original manual and to register for email notification of updates.

10-1 TAIL ROTOR ASSEMBLY

A. General Description – Tail Rotor Assembly

The tail rotor assembly consists of two blade and grip units mounted on a common spindle by the use of a pair of matched DT ball bearings and one needle bearing per grip. This rotating assembly is teeter-mounted on a center hub by the use of two roller bearings. The center hub is splined to match the tail rotor gearbox output shaft for positive mounting and driving. The control of this assembly is blade to pitch link, to sliding pivot yoke, to cables, cables to bell crank and bell crank to foot pedals in the cockpit.

B. Troubleshooting – Tail Rotor Assembly

NOTE: Previous tail rotor assembly P/N 28-150050 is superseded and replaced by P/N 28-150079.

Problem	Possible Cause	Required Action
Foot pedal controls are binding	Pivot bolts on tail rotor bracket overtorqued	Loosen pivot bolts and retorque.
	Improper assembly of pitch links to pitch arm	Install spacers properly to allow for needed clearance on each side of pitch links.
	Tail rotor misaligned on output shaft, causing pitch links to bind	Remove tail rotor and reinstall using correct alignment. Refer to Fig. 10-6.
Noticeable dead spot in tail rotor	Improper tension on control	Check rigging procedure and adjust cables to 35-40 lb/15.9-18.1 kg pedal control cables.
	Feathering bearings worn or rubber bumper shifted and binding	Disconnect pitch links and rotate grips to determine problem blade. Replace faulty or worn parts.
Tail rotor vibration	Out of balance	Dynamic balance.
	Excessive axial play in the hub teeter bearings (P/N 28-150079 tail rotor assembly)	Reshim (Para. 10-1.I.(1)(h)) or replace the teeter bearings (Para. 10-1.G).
	Tail stringer clamp loose on aft bulkhead	Replace clamp attaching hardware, as required or replace bulkhead.

UNCONTROLLED COPY WHEN DOWNLOADED OR PRINTED

Visit www.enstromhelicopter.com for instructions to order an original manual and to register for email notification of updates.

Problem	Possible Cause	Required Action
Tail rotor vibration (continued)	Excessive end play in teeter bearings, creating out of balance condition (P/N 28-150050 tail rotor assembly)	Remove tail rotor assembly and retighten retainer caps until hub rotates firmly by hand with no end play. Grease and static balance. NOTE: If teeter bearings are bad, they may be replaced without removing blade and grip assemblies.
	Improper lubrication	Both grips must be greased each time tail rotor is lubricated or an out of balance condition will result.

NOTE: The following instructions pertain to tail rotor assembly P/N 28-150079. Tail rotor assembly P/N 28-150050 is no longer supported.

C. Removal – Tail Rotor Assembly

NOTE: Refer to Fig. 10-1 for numbered items.

NOTE: Index mark (color code) the pitch change links to the pitch change plates.

NOTE: Retain the order of the hardware stack-up for ease of installation.

(1) Remove bolt (1), washers (5), (13), and (8), spacers (10) and (9), and nut (6) to disconnect pitch change links from the pitch plates (horn) (Fig. 10-3, left).

(2) Remove safety wire from the tail rotor retention bolt. Remove bolt (31), washer (30), and teeter stop (29).

NOTE: Index mark hub and shaft splines for ease of installation.

(3) Carefully slide tail rotor assembly from the transmission output shaft.

(4) Temporarily install teeter stop (29), washer (30), and bolt (31) or a PD-40 (-4 plug) into the transmission output shaft to prevent oil leaking from the gearbox.

D. Disassembly – Tail Rotor Blade Assembly

NOTE: The removal procedures are the same for both blade and grip assemblies.

CAUTION: USE BRASS PROTECTOR PLATED IN THE VISE JAWS TO PREVENT FROM DAMAGING THE TAIL ROTOR SPINDLE OR INSTALL SPINDLE ON TOOL T-0168-1.

(1) Clamp tail rotor assembly in a vise so that the blades can be rotated.

(2) Remove retention bolt safety wire from around center hub.

(3) Remove bolts (26), washers (27), and nuts (28) from the pitch change plates (11).

UNCONTROLLED COPY WHEN DOWNLOADED OR PRINTED

Visit www.enstromhelicopter.com for instructions to order an original manual and to register for email notification of updates.

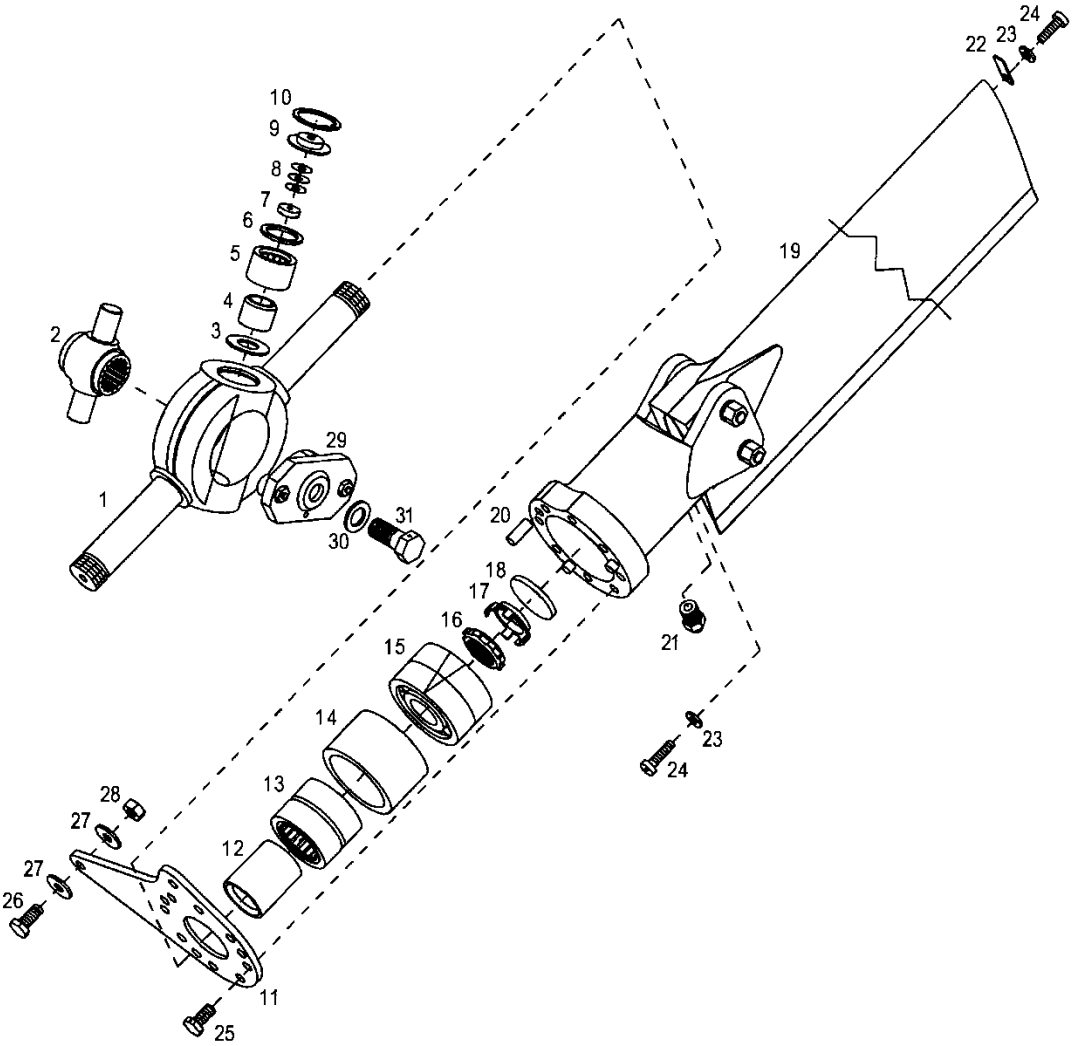

1. Tail Rotor Spindle
2. Tail Rotor Hub
3. Washer
4. Bearing Journal
5. Teeter Bearing
6. Seal
7. Thrust Bumper
8. Shims
9. End Plate Assembly
10. Retaining Ring
11. Pitch Change Plate
12. Bearing Sleeve
13. Bearing
14. Bearing Retainer
15. Thrust Bearing Set
16. Nut
17. Lock Washer
18. Bumper
19. Blade and Grip Assembly
20. Dowel Pin
21. Lubrication Fitting
22. Strike Indicator
23. Washer
24. Screw
25. Bolt
26. Bolt
27. Harper Washer
28. Nut
29. Teeter Stop
30. Washer
31. Bolt

Figure 10-1. Tail Rotor Assembly

UNCONTROLLED COPY WHEN DOWNLOADED OR PRINTED

Visit www.enstromhelicopter.com for instructions to order an original manual and to register for email notification of updates.

(4) Remove safety wire and bolts (25) from the pitch change plates.

NOTE: Remove the lubrication fitting (21) from the blade grip to ease removal and installation of the blade and grip assembly.

CAUTION: DO NOT TAP ON THE ROOT OF THE BLADE DURING THE REMOVAL PROCESS OR REMOVE THE BLADE FROM THE BLADE GRIP. THEY ARE MATCH DRILLED WHEN ASSEMBLED.

(5) Use a rubber hammer to tap retention plate (11) to loosen it from the blade grip.

WARNING: USE EXTREME CAUTION WHEN REMOVING OR INSTALLING THE BLADE AND GRIP ASSEMBLIES TO PREVENT FROM INJURING PERSONNEL. USE PROTECTIVE GLOVES WHEN HANDLING HEATED PARTS.

NOTE: A deflector may be used as an aid during heating the grip.

(6) Loosen blade retention bolt nuts slightly (sufficient to remove the torque and clearance is observed between the nut and the grip) and heat blade grip to approximately 250°F/121°C.

(7) Remove blade and grip assembly (19) by pulling on the blade with one hand and tapping on the blade bolt nuts with a nylon hammer. If required, rotate tail rotor assembly and remove the opposite blade and grip assembly.

(8) Remove bumper (18) from the end of the spindle.

(9) Remove lock washer (17) by prying up on the tabs with a screw driver.

(10) Remove nut (16) from spindle using tool T-0056-3 or T-0056-1 if available. If tangs on the nut are damaged, T-0056-1 can be used with an impact wrench to remove the nut.

NOTE: The thrust bearings are matched sets. Keep together.

(11) Remove thrust bearings (15) from spindle.

(12) Remove bearing retainer (14) and bearing (13).

(13) Remove bearing sleeve (12).

(14) Remove pitch change plate (11).

(15) Remove retaining rings (10), end plates (9), shims (8), thrust bumpers (7) and seals (6) from the spindle.

CAUTION: WHEN PRESSING THE BEARINGS OUT OF THE SPINDLE, DO NOT ALLOW THE HUB TO BOTTOM AGAINST THE SPINDLE.

(16) Using tool kit T-2893 or other suitable device with a properly sized dowel, press hub (2) toward one side of the spindle until the hub is about to contact the spindle. Turn the spindle over and press the hub and opposite needle bearing in the same manner.

UNCONTROLLED COPY WHEN DOWNLOADED OR PRINTED

Visit www.enstromhelicopter.com for instructions to order an original manual and to register for email notification of updates.

(17) Move hub to the opposite side of the spindle as the bearing to be removed and insert the split pressing tools from the tool kit onto the journal (4). Press needle bearing (5) from the spindle. Insert the T-2893 split pressing tools onto the opposite side of the hub and press out the remaining needle bearing.

NOTE: The journals are installed with Loctite 277 (red). It will be necessary to heat the journals to 250°F to soften the Loctite and remove the journals.

(18) Using the tool kit or other suitable device, remove one of the journals from the hub. Remove the hub from the spindle and remove the remaining journal and the washers (3).

E. Cleaning – Tail Rotor Assembly

NOTE: Care should be used in cleaning the tail rotor to prevent scratching or damaging parts.

(1) Wash parts in cleaning solvent.

(2) Wash bearings in clean solvent to prevent contamination of the bearings.

F. Inspection – Tail Rotor Assembly

(1) See Table 10-1 for detailed inspection requirements for the tail rotor assembly.

(2) Inspect paint finish of the blades for blistering, erosion, cracking, chipping, peeling, and overall oxidation.

(3) Inspect trailing edge bond lines for voids or openings, dark deposits, and bubbly or scaly paint.

(4) Inspect spar bond lines for raised sections or voids, dark deposits, and bubbly or scaly paint.

(5) Inspect bond lines at the doubler edges for paint cracking or scaling, dark deposits, and void in the fairing compound.

(6) Inspect tail rotor blade skins, abrasion strip, retention plates, and root doublers for nicks, scratches, dents, and cracks.

(7) Inspect blade tip rib for loose rivets.

G. Repair – Tail Rotor Assembly

CAUTION: THE TAIL ROTOR ASSEMBLY MUST BE STATICALLY AND DYNAMICALLY REBALANCED AFTER ANY REPAIR.

NOTE: Refinish the repaired area in accordance with Para. 9-10.A, or Para. 9-11 depending on the condition of the rest of paint finish.

UNCONTROLLED COPY WHEN DOWNLOADED OR PRINTED

Visit www.enstromhelicopter.com for instructions to order an original manual and to register for email notification of updates.

(1) Repair small areas of the paint finish (Para. 9-11).

(2) Reject tail rotor blades with the following bond line separations or voids:

(a) Trailing edge separations deeper than .050 inch/1.3 mm or more than 2.0 inch/5.1 cm in length.

(b) Stainless steel abrasion strip separations more than 2.0 in/5.1 cm from the tip of the blade or deeper than .062 inch/1.6 mm.

(c) Root doubler separations closer than 2.0 in/5.1 cm from the tip of the doubler under which the separation appears, or greater than 1.0 in/2.5 cm in length, or deeper than .062 in/1.6 mm.

(3) Repair voids and separations of the tail rotor blade bond lines that do not exceed the limits step (2) above, in accordance with Para. 9-10.D.

(4) Reject tail rotor blades with the following blade skin damage:

(a) Scratches, nicks, or sharp dents deeper than .010 in/.25 mm.

(b) Nicks in trailing edge deeper than .100 in/2.5 mm.

(c) Smooth dents exceeding .025 in/0.6 mm.

(d) Cracks or punctures.

(5) Repair damage to the blade skins not exceeding the limits in step (4) above as follows:

(a) Buff out all scratches not deep enough to penetrate the clad material.

(b) Blend scratches, nicks, or sharp dents out smooth over a 2.0 in/5.1 cm diameter area.

(c) Blend out nicks in the trailing edge in accordance with Fig. 10-2.

(d) No repair required for smooth dents.

(6) Reject tail rotor blades with the following abrasion strip damage:

(a) Nicks and scratches deeper than .005 in/0.13 mm.

(b) Dents deeper than .040 in/0.1 mm.

(c) Cracks, punctures, or erosion penetration of the stainless steel.

(7) Repair damage to the abrasion strip not exceeding the limits in step (6) above, as follows:

(a) Blend nicks and scratches out smooth over an area 1 in/2.5 cm long (parallel to the leading edge) by .50 in/0.13 mm wide.

(b) No repair required for smooth dents.

UNCONTROLLED COPY WHEN DOWNLOADED OR PRINTED

Visit www.enstromhelicopter.com for instructions to order an original manual and to register for email notification of updates.

(8) Reject tail rotor blades with the following root doubler damage:

(a) Nick, scratches, or sharp dents deeper than .010 in/.25.

(b) Smooth dents deeper than .020 in/5.1 mm.

(c) Cracks.

(9) Repair damage to the root doublers not exceeding the limits in step (8) above, as follows:

(a) Blend nicks, scratches, or sharp dents out smooth to approximately .50 in/13 mm on either side of the damaged area.

(b) No repair required for smooth dents.

(10) Reject tail rotor blades with the following retention plate damage:

(a) Nick, scratches, or sharp dents deeper than .030 in/0.8 mm.

(b) Cracks.

(11) Repair damage to the retention plates not exceeding the limits in step (10) above as follows:

(a) Blend nicks, scratches, or sharp dents out smooth to approximately 1.0 in/2.5 cm in diameter.

(12) Reject tail rotor blades with cracked tip ribs.

(13) Replace loose rivets.

H. Refinishing – Tail Rotor Assembly

(1) Remove tail rotor assembly and disassemble.

(2) Index mark hardware in the blade and grip assembly.

(3) Remove hardware from the blade and grip assemblies and separate the blades from the grips.

(4) Refinish blades (Para. 9-11).

(5) Reinstall blades into the grips. Torque blade retention bolt nuts to 75 in-lb/8.5 Nm (140 in-lb/15.9 Nm if the blade and grip assembly has been factory repaired and 5/16 inch bolts installed).

(6) If required, reassemble tail rotor assembly.

(7) Statically balance tail rotor assembly (Para. 10-2).

UNCONTROLLED COPY WHEN DOWNLOADED OR PRINTED

Visit www.enstromhelicopter.com for instructions to order an original manual and to register for email notification of updates.

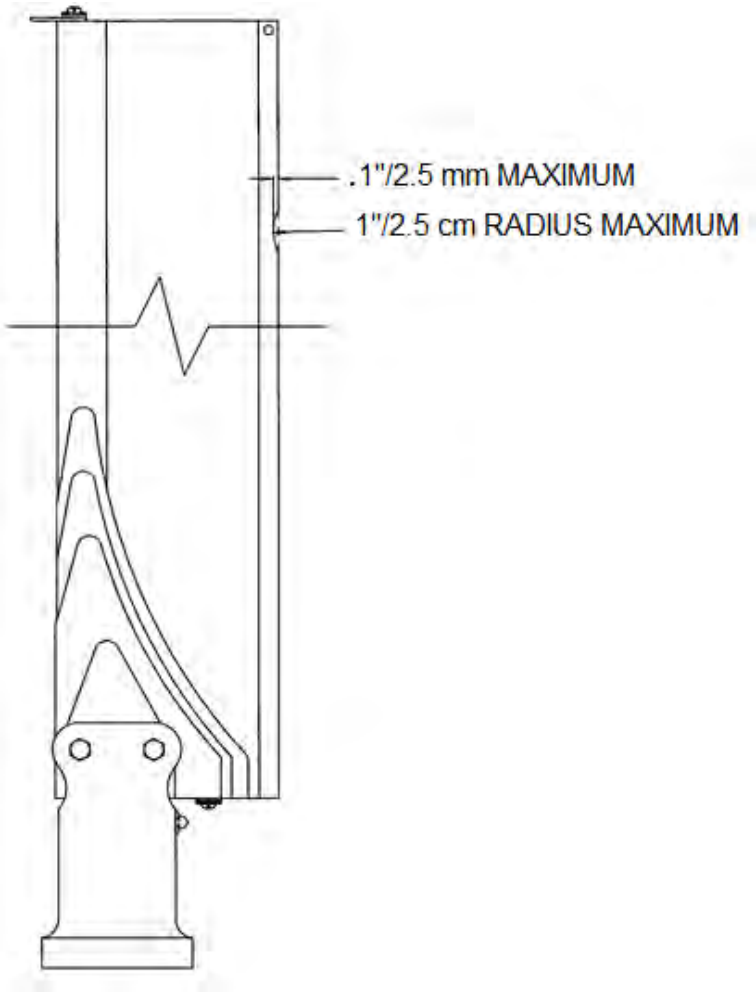

Figure 10-2. Tail Rotor Blade Trailing Edge Repair Limits

UNCONTROLLED COPY WHEN DOWNLOADED OR PRINTED

Visit www.enstromhelicopter.com for instructions to order an original manual and to register for email notification of updates.

I. Assembly – Tail Rotor Assembly (Fig. 10-1)

(1) Install hub (2) into spindle (1) using the following procedure:

(a) Install one of the washers (3) onto the hub with the chamfer toward the center of the hub.

(b) Apply a light coating of Loctite® 277 (red) to the inside diameter of one of the journals (4). Install the journal onto the hub (2) with the large chamfer outboard. Remove any excess Loctite®.

(c) Install hub (2) into the spindle (1) and install the other washer (3) and journal (4) in the same manner.

NOTE: Position teeter bearing (5) such that the end with the printed manufacturer data is facing outboard.

NOTE: Use ultra fine crocus cloth to eliminate interference fit between the hub journal and the bearing journal.

(d) Position one of the teeter bearings (5) at the teeter bearing bore of the spindle and using the installation tool from the tool kit T-2893 press the bearing into the spindle.

NOTE: Install the teeter bearing (5) into the spindle (1) to a depth of .191/.193 inch if not using tool kit T-2893.

CAUTION: ENSURE THE HUB AND JOURNAL ARE ALIGNED WITH THE REMAINING NEEDLE BEARING DURING INSTALLATION TO PREVENT ANY DAMAGE.

(e) Turn spindle over and insert hub (2) into teeter bearing (5) that was just installed. Install the remaining teeter bearing (5).

(f) Check that the hub rotates freely in the bearings. Determine the cause if the hub does not rotate freely.

(g) Install seal (6), thrust bumper (7) with the lubrication grooves toward the hub, end cap (9), and retaining ring (10) in both sides of the spindle.

NOTE: Ensure the retaining ring is fully seated after installation.

(h) Determine amount of shims (8) required to remove end play from the hub. Add an additional .004 to .005 in/0.10 to 0.13 mm of shims to each side for preload.

(i) Remove retaining rings (10) and end plates (9) from the spindle. Divide the shims into two equal amounts. Install the shims between the thrust bumpers (7) and the end caps (9). Reinstall the end caps and retaining rings. If the caps or retaining rings do not seat properly in the spindle, use a pair of non-marring pliers to rotate the cap to seat it properly.

(j) Check that the hub still rotates freely in the spindle. There should be a slight preload (1/2-1 lb/0.22-.45 kg, 6 in/15.2 cm from the hub) on the hub but the hub should still be able to be rotated.

(k) Purge lubricate teeter bearings (5) (MIL-G-25537 (preferred) or MIL-PRF-81322).

UNCONTROLLED COPY WHEN DOWNLOADED OR PRINTED

Visit www.enstromhelicopter.com for instructions to order an original manual and to register for email notification of updates.

NOTE: The installation procedures are the same for both blade and grip assemblies.

CAUTION: USE BRASS PROTECTOR PLATED IN THE VISE JAWS TO PREVENT FROM DAMAGING THE TAIL ROTOR SPINDLE.

(2) Place spindle into a vise so that the blade and grip assemblies can be rotated when installed or use tool T-0168-1.

(3) Install pitch change plate (11) on the spindle with the machined clearance surface of the pitch arm facing outboard.

(4) Lubricate (MIL-G-25537 or MIL-PRF-81322) inner diameter of the bearing sleeve (12) and install bearing sleeve onto spindle.

(5) Lubricate (MIL-G-25537 or MIL-PRF-81322) outside of the bearing (13) and press into bearing retainer (14).

NOTE: Install bearing (13) and retainer (14) on spindle with closed end of the retainer facing outboard toward the thrust bearings.

(6) Install the thrust bearings (15) in matched sets with the closed side of the bearing facing inboard toward the hub. This side of the bearing will also have the word "thrust" imprinted on the face of the outer race. Most of these bearing sets will be scribed with a "V" on the outer races pointing toward the center hub.

(7) Install retaining nuts (16) using tool T-0056 and torque to 80-90 ft-lb/109.1-122.7 Nm.

(8) Align and install lock washer (17).

(9) Clean surface of the bumper (18) and end of the spindle with acetone or equivalent. Apply a small amount of MIL-G-25537 or MIL-PRF-81322 onto the end of the bumper and the end of the spindle and attach the bumper to the end of the spindle. (The plastic disk on the side of the bumper fits into the bearing retaining nut lockwasher (17).)

(10) Lubricate (MIL-PRF-81322) the O.D. of the bearings (15).

WARNING: USE EXTREME CAUTION WHEN REMOVING OR INSTALLING THE BLADE AND GRIP ASSEMBLIES TO PREVENT FROM INJURING PERSONNEL. USE PROTECTIVE GLOVES WHEN HANDLING HEATED PARTS.

(11) Using a heat gun, heat blade grip (19) to approximately 250°F/121°C.

(12) Place a dab of grease (MIL-G-25537 or MIL-PRF-81322) onto the outboard surface of the bumper (18).

(13) Lubricate (MIL-G-25537 or MIL-PRF-81322) bore of the blade grip. Quickly slide blade and grip assembly onto the spindle. Align the pitch link hole in the pitch change plate to the leading edge of the blade. Leave about 1/8 inch between the grip and the retention plate.

NOTE: Alternately tighten the bolts 1 to 2 turns to pull the pitch change plate and grip straight together.

UNCONTROLLED COPY WHEN DOWNLOADED OR PRINTED

Visit www.enstromhelicopter.com for instructions to order an original manual and to register for email notification of updates.

(14) Start three bolts (25) into the grip, each closest to a dowel pin (20), and tighten to pull the grip and the pitch change plate together.

(15) Install remaining bolts (25). After blade and grip assembly has cooled, torque bolts to 50-70 in-lb/5.7-8.0 Nm and safety wire (.032) in pairs.

NOTE: Ensure the safety wire does not interfere with the pitch change link hardware when the blades are alternately pitched.

(16) Torque blade retention bolt nuts to 75 in-lb/8.5 Nm (140 in-lb/15.9 Nm if the blade and grip assembly has been factory repaired and 5/16 inch bolts installed) after the blade grip has cooled.

(17) Install grease fitting (21) into grip and lubricate grip (Para. 4-31) until grease purges from the pitch change plate from around the spindle.

(18) If required, install the opposite blade and grip assembly.

(19) Statically balance tail rotor (Para. 10-2).

(20) Install bolts (26), washers (27), and nuts (28) onto the pitch arms, if not installed.

NOTE: Complete static balance procedure before installing the tail rotor on helicopter.

J. Inspection, Repair, Assembly, and Installation – Pitch Link Assembly

NOTE: Pitch change links P/N 28-16345-11 or P/N 28-16391-1 must be installed as same part number pairs (either two P/N 28-16345-11 or two P/N 28-16391-1). Pitch change links P/N 28-16391-3 or P/N 28-16391-5 may be installed in combination with each other but not in combination with P/N 28-16345-11 or P/N 28-16391-1. For the barrel type, the pitch change link length and rod end orientation has been set at the factory. Do not disassemble unless the rod ends need replacement. If replacement is necessary, follow steps (3) through (6) (Refer to Fig. 10-5 for pitch link configurations).

(1) Inspect pitch change links for cracks, corrosion, bends, damage, and proper and secure installation.

NOTE: The following step requires disconnecting the pitch change link from the pitch arm. Keep bolt and washer stack up together.

(2) Inspect bolts, spacers,O-rings, and washers for wear. Observe if any distinct wear pattern is evident through the cad-plate and into the base material.

(3) Corrosion, nicks, or scratches in the solid link, barrel, or rod end outer race not exceeding 0.010 in/0.25 mm deep may be burnished out. Replace the solid link, barrel, or rod end if cracked or damage exceeds 0.010 in/0.25 mm deep. Replace the rod end if its axial play is exceeds 0.005 in/0.13 mm.

(4) Inspect pitch arm for damage. Replace pitch arm if cracks are detected or the pitch link bolt hole exceeds 0.251 in/6.38 mm diameter. Edge nicks may not exceed 0.005 in/0.13 mm deep. Polish and blend locally to a maximum 0.008 in/0.20 mm deep.

NOTE: Steps (5) through (8) and (11) apply to the barrel type pitch change links only.

(5) Install lock nuts on rod ends.

UNCONTROLLED COPY WHEN DOWNLOADED OR PRINTED

Visit www.enstromhelicopter.com for instructions to order an original manual and to register for email notification of updates.

(6) Apply VC-3 Loctite to threads of rod ends.

(7) Turn right hand rod end into barrel until threads just cover the witness hole in the barrel.

(8) Turn left hand rod end into barrel until overall length of pitch link measures 4.260 in ± 0.005 in/10.82 cm ± 0.13 mm.

NOTE: Replacing pitch links or rod ends requires checking tail rotor balance.

NOTE: Steps (9) through (12) are to be completed after installation of tail rotor on transmission.

NOTE: For aircraft manufactured or modified with P/N 28-16391-3 or 28-16391-5 pitch link assemblies, the rod end labeled "**T/R ↑ BLADE,"** must be installed in the proper orientation (Fig. 10-3, (4)).

NOTE: Refer to Fig. 10-3 and Fig. 10-4 for the following steps unless stated otherwise.

(9) Install inboard-hand thread rod end of the pitch change link and spacers (3) into the retainer. Install bolts (1) so that heads are in the direction of rotation, washers (2) and (5), and nuts (6). Torque nuts and install the cotter pins (7).

(10) Connect outboard-hand thread rod ends to the pitch arms with the hardware in the following sequence: bolt (1) (bolt head installed in direction of rotation), washer (8), thin spacer (9), O-ring (11), pitch change link rod end (4), thick spacer (10), washer (13), pitch arm, washer(s) (5) (use stack-up retained in Para. C.(1)), and nut (6). Torque the nuts (55-75 in-lb/6.2-8.5 Nm) and install the cotter pins (7).

NOTE: For washers (5) and (13), replace any AN960 with the equivalent size NAS1149C04XXR (passivated stainless steel).

NOTE: A pre-existing spacer may have been wider or narrower than a replacement spacer. Adjust the number of washers under the nut (6) to account for the dimensional difference.

NOTE: Any modification must be made to both sides to maintain the dynamic balance of the tail rotor.

(11) Adjust length of assembly by rotating barrel until pitch link assembly measures 4.260 in ± 0.005 in/10.82 cm ± 0.13 mm. Holding barrel with wrench, tighten lock nuts in place. Recheck length of assembly to be sure it is still 4.260 in ± 0.005 in/10.82 cm ± 0.13 mm (Fig. 10-5).

CAUTION: USING A PIECE OF 0.025 SAFETY WIRE, INSERT WIRE IN WITNESS HOLE OF BARREL TO BE SURE RIGHT HAND THREAD ROD END IS STILL TURNED IN PAST HOLE.

(12) If rod ends were replaced or if changes were made to the tail rotor rotating controls assembly hardware as a result of incorporating missing hardware, dynamic balance tail rotor assembly (Para. 10-3).

UNCONTROLLED COPY WHEN DOWNLOADED OR PRINTED

Visit www.enstromhelicopter.com for instructions to order an original manual and to register for email notification of updates.

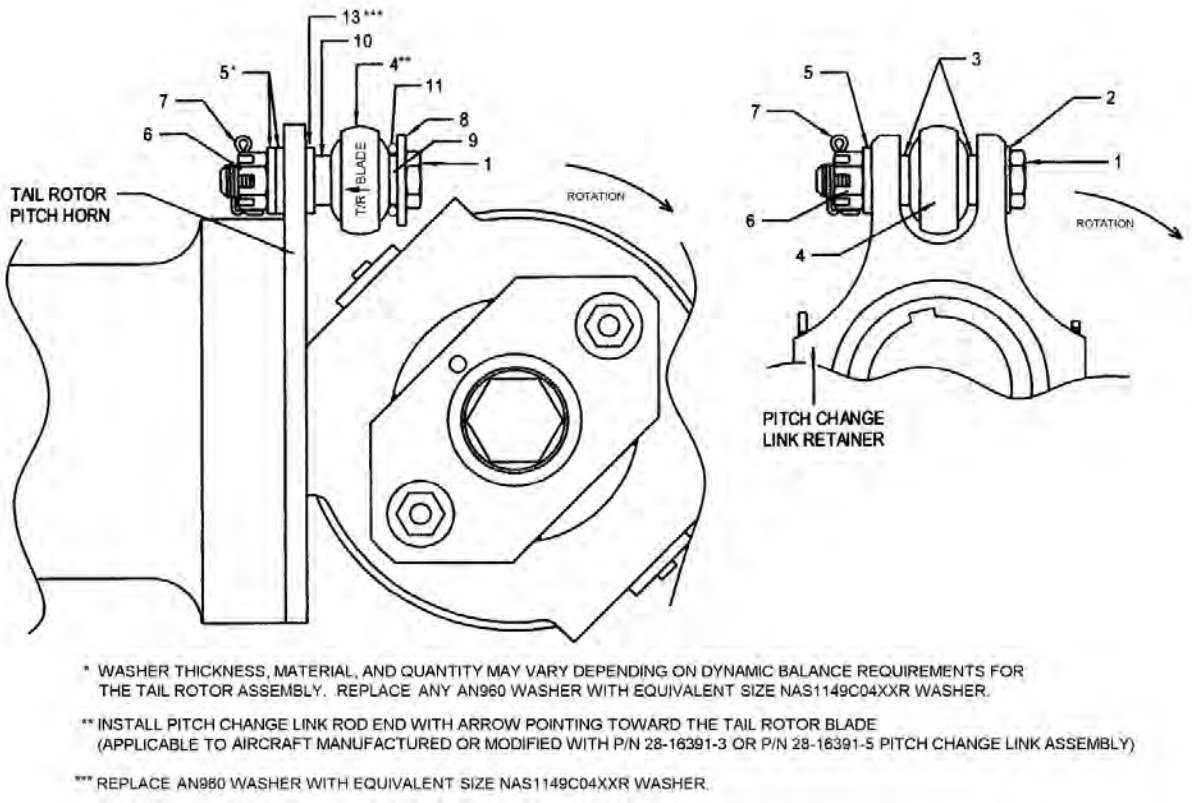

* WASHER THICKNESS, MATERIAL, AND QUANTITY MAY VARY DEPENDING ON DYNAMIC BALANCE REQUIREMENTS FOR THE TAIL ROTOR ASSEMBLY. REPLACE ANY AN960 WASHER WITH EQUIVALENT SIZE NAS1149C04XXR WASHER.

** INSTALL PITCH CHANGE LINK ROD END WITH ARROW POINTING TOWARD THE TAIL ROTOR BLADE (APPLICABLE TO AIRCRAFT MANUFACTURED OR MODIFIED WITH P/N 28-16391-3 OR P/N 28-16391-5 PITCH CHANGE LINK ASSEMBLY)

*** REPLACE AN960 WASHER WITH EQUIVALENT SIZE NAS1149C04XXR WASHER.

1. Bolt
2. Washer
3. Spacer
4. Pitch Change Link Rod End
5. Washer
6. Nut
7. Cotter Pin
8. Washer
9. Spacer
10. Spacer
11. O-ring
12. Pitch Change Link (28-16391-3 or -5 are shown in Fig. 10-4)
13. Washer

Figure 10-3. Tail Rotor Pitch Change Link Installation



Figure 10-4. Pitch Change Link Installation

UNCONTROLLED COPY WHEN DOWNLOADED OR PRINTED

Visit www.enstromhelicopter.com for instructions to order an original manual and to register for email notification of updates.

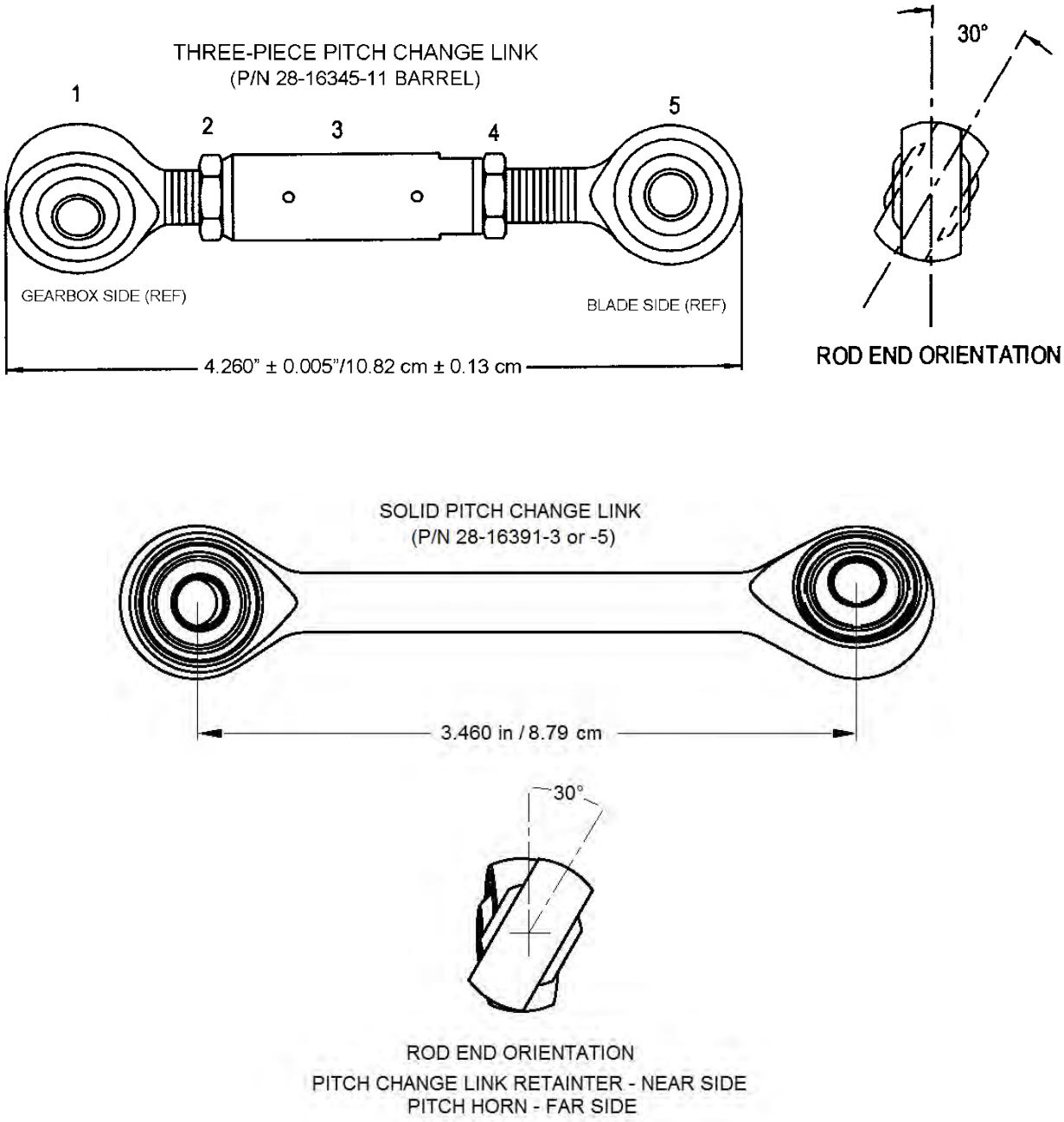

Figure 10-5. Tail Rotor Pitch Change Link

UNCONTROLLED COPY WHEN DOWNLOADED OR PRINTED

Visit www.enstromhelicopter.com for instructions to order an original manual and to register for email notification of updates.

K. Installation – Tail Rotor Assembly

(1) Start a .041 wrap of safety wire around the hub.

NOTE: The tail rotor assembly may be rotated 180° or the center hub may be pivoted 180° to obtain the proper installation position of the tail rotor assembly.

NOTE: See Fig. 10-6. A line drawn through the grease fittings of either end of the teetering hub (tail rotor hub pivot center line) should align with the lagging ears of the pitch link retainer. If the tail rotor hub pivot centerline is centered between the ears of the pitch link retainer, rotate the teeter trunnion 180° to obtain the correct 8° alignment.

(2) Install tail rotor assembly onto transmission output shaft. Ensure center line of the tail rotor hub pivot axis aligns with the inboard side of the pitch change link retainer ear that lags in the direction of rotation.

(3) Feed safety wire through the hole in the teeter stop and install teeter stop so that the rubber bumpers align with the flats of the spindle.

(4) Install retention bolt and washer into teeter stop. Torque the retaining bolt to 300 in-lb/34.1 Nm and complete the safety.

(5) Connect pitch change links to the pitch change plates (Para. 10-1.J.(8)).

(6) Dynamically balance the tail rotor (Para. 10-3).

UNCONTROLLED COPY WHEN DOWNLOADED OR PRINTED

Visit www.enstromhelicopter.com for instructions to order an original manual and to register for email notification of updates.

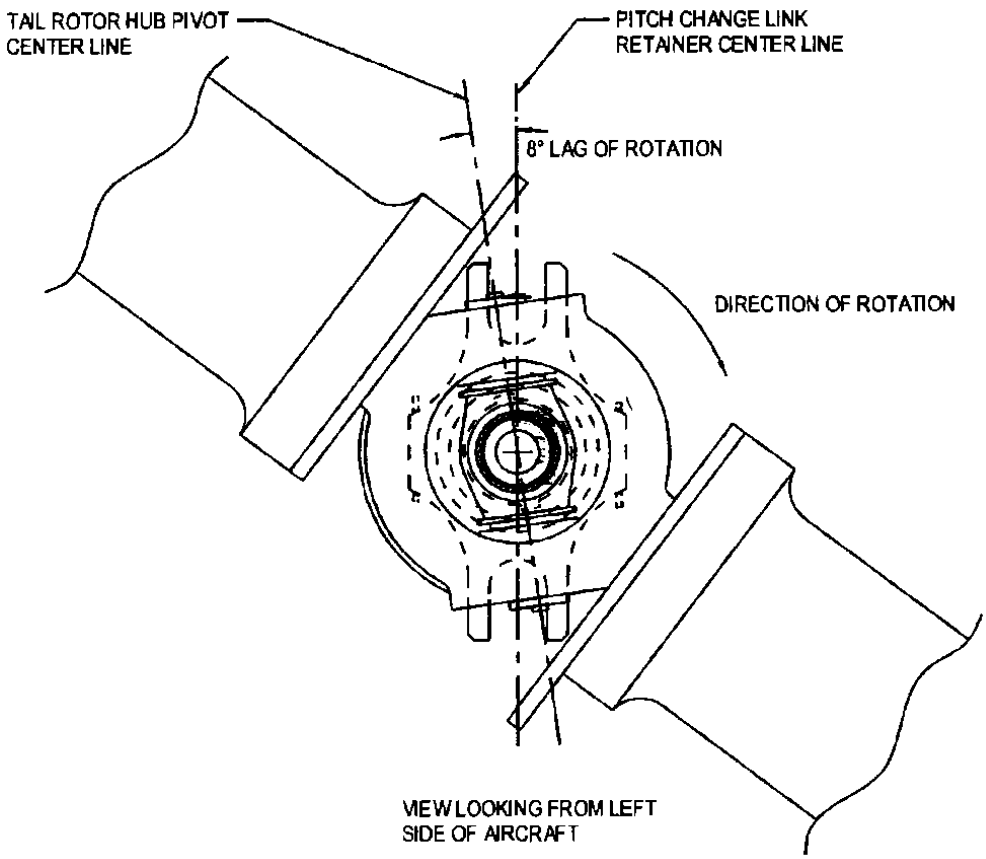

Figure 10-6. Tail Rotor Installation Orientation

UNCONTROLLED COPY WHEN DOWNLOADED OR PRINTED

Visit www.enstromhelicopter.com for instructions to order an original manual and to register for email notification of updates.

Table 10-1. Inspection Requirements – Tail Rotor Assembly

Part Number	Fig. 10-1 Item Number	Part Name	Inspection*	Serviceable Limits*	Repair Limits*	Repair or Action
28-150074-11, -13	1	Spindle	Surface scratches, nicks, or corrosion	None Allowed	≤ .001 deep	Polish with Scotch Brite pad or equivalent
			Threads (crossed or missing)	None Allowed	Not Repairable	Replace Spindle
			Feathering bearing shaft O.D. .7864 to .7868	-.0002	Not Repairable	Replace Spindle
			Teeter bearing bore Dia. 1.0002 to 1.0007	-.0002	Not Repairable	Replace Spindle
			Cracks	None Allowed	Not Repairable	Replace Spindle
28-150067-15	2	Hub	Splines (pitted or wicked)	None Allowed	Not Repairable	Replace Hub
			Teeter bearing shaft Dia. .4989 to .4994	-.0002	Not Repairable	Replace Hub
			Nicks, scratches, or corrosion	None Allowed	≤ .005	Blend out smooth
			Cracks	None Allowed	Not Repairable	Replace Hub
			Threads (stripped or missing)	None Allowed	Not Repairable	Replace Hub

UNCONTROLLED COPY WHEN DOWNLOADED OR PRINTED

Visit www.enstromhelicopter.com for instructions to order an original manual and to register for email notification of updates.

Table 10-1. Inspection Requirements – Tail Rotor Assembly

Part Number	Fig. 10-1 Item Number	Part Name	Inspection*	Serviceable Limits*	Repair Limits*	Repair or Action
28-150076-15	4	Journal	Journal I.D. .4995 to .4998	+.0002	Not Repairable	Replace Journal
			Journal O.D. .7509 to .7511	-.0002	Not Repairable	Replace Journal
B-1210	5	Needle Bearing	Bearing O.D. 1.000	-.0002	Not Repairable	Replace Bearing
			Visible wear of the needles	None Allowed	Not Repairable	Replace Bearing
28-150076-13	7	Thrust Bumper	Thickness .123 to .125	-.002	Not Repairable	Replace Bumper
28-150060-11	11	Pitch Change Plate	Nicks in edge of plate	None Allowed	≤ .005 deep	Polish and blend locally not to exceed .008
			Pitch link bolt hole Dia. .250 to .251	+.0005	Not Repairable	Replace pitch change plate
			Corrosion	None Allowed		Return to the factory for inspection and replating, or replace pitch change plate
			Cracks	None Allowed	Not Repairable	Replace pitch change plate
28-150063-11, -13	12	Sleeve	Sleeve I.D. .7878 to .7882 (-11)	+.0002	Not Repairable	Replace Sleeve
			Sleeve I.D. .7872 to .7876 (-13)	+.0002	Not Repairable	Replace Sleeve
			Sleeve O.D. 1.1245 to 1.1250	-.0002	Not Repairable	Replace Sleeve

UNCONTROLLED COPY WHEN DOWNLOADED OR PRINTED

Visit www.enstromhelicopter.com for instructions to order an original manual and to register for email notification of updates.

Table 10-1. Inspection Requirements – Tail Rotor Assembly

P/N	Fig. 10-1 Item Number	Part Name	Inspection*	Serviceable Limits*	Repair Limits*	Repair or Action
MR-18, ECD001-11	13	Bearing	Bearing O.D. 1.6250	+.0000 -.0005	Not Repairable	Replace Bearing
			Visible wear of the rollers	None Allowed	Not Repairable	Replace Bearing
28-150055-13, -15	14	Retainer	Retainer I.D. 1.6250 to 1.6255 (-13)	+.0005	Not Repairable	Replace Retainer
			Retainer I.D. 1.6240 to 1.6247 (-15)	+.0005	Not Repairable	Replace Retainer
			Retainer O.D. 2.043 to 2.044	-.001	Not Repairable	Replace Retainer
ECD002-11, -13, -15, -17	15	Bearing	Bearing O.D. 2.0467 to 2.0472	-.0002	Not Repairable	Replace Bearing
			Bearing Bore Dia. .7870 to.7874	+.0002	Not Repairable	Replace Bearing
			Preload to the trust side and check for roughness or ratcheting	None Allowed	Not Repairable	Replace Bearing
SL61N5P SL61N5F	16	Nut	Threads (rolled or missing)	None Allowed	Not Repairable	Replace Nut
			Nicks and burrs on O.D.	None Allowed	≤ .10 deep	Blend and polish out smooth
			Rounded or burred locking tabs	Max. 2 slightly rounded tabs	To allow use of the locknut wrench	Blend and polish out smooth
			Cracks	None Allowed	Not Repairable	Replace Nut

UNCONTROLLED COPY WHEN DOWNLOADED OR PRINTED

Visit www.enstromhelicopter.com for instructions to order an original manual and to register for email notification of updates.

Table 10-1. Inspection Requirements – Tail Rotor Assembly

P/N	Fig. 10-1 Item Number	Part Name	Inspection*	Serviceable Limits*	Repair Limits*	Repair or Action
SL61W5P	17	Lockwasher	Nicked locking tabs	None Allowed	≤ .005 deep	Blend and polish out smooth
			Bent locking tabs	> 10° from parallel to the bore	≤ 10° from parallel to the bore	Bend the tabs until parallel to the bore
			Serrated splines (smooth or rolled)	None Allowed	Not Repairable	Replace Lockwasher
28-15033	18	Bumper	Both sides for friction wear	Surfaces must be smooth	Not Repairable	Replace Bumper
			Cracks	None Allowed	Not Repairable	Replace Bumper
28-150001-5	19	Blade and Grip Assembly Note 1	Blade Grip: Bearing bore Dia. 2.0454 to 2.0466	+.0005	Not Repairable	Replace Blade and Grip Assembly
			Nicks, scratches, or corrosion in the bearing housing area of the grip	.020 deep	≤ .020 deep	Blend and polish out smooth, treat with chemical conversion coating
			Nicks, scratches, or corrosion in the blade retention area or the grip	.010 deep	≤ .010 deep	Blend and polish out smooth, brush with iridite finish
			Cracks	None Allowed	Not Repairable	Replace blade and grip assembly

UNCONTROLLED COPY WHEN DOWNLOADED OR PRINTED

Visit www.enstromhelicopter.com for instructions to order an original manual and to register for email notification of updates.

Table 10-1. Inspection Requirements – Tail Rotor Assembly

P/N	Fig. 10-1 Item Number	Part Name	Inspection*	Serviceable Limits*	Repair Limits*	Repair or Action
28-150001-5	19	Blade and Grip Assembly (Cont'd) Note 1	Blade:			
			Doubler Separation	None Allowed	See Para.10-1.G	See Para.10-1.G
			Leading edge bond separations	None Allowed	See Para.10-1.G	See Para.10-1.G
			Trailing edge bond separations	None Allowed	See Para.10-1.G	See Para.10-1.G
			Sharp dents or scratches in the blade skin	None Allowed	See Para.10-1.G	See Para.10-1.G
			Smooth dents in the blade skin	.020 deep, not to exceed 1.0" in Dia.	See Para.10-1.G	See Para.10-1.G
			Bent, distorted or rippled blades	None Allowed	Not Repairable	Replace Blade
			Smooth dents in the leading edge	Not to exceed .020 deep	See Para.10-1.G	See Para.10-1.G
			Sharp dents or scratches in the leading edge	None Allowed	See Para.10-1.G	See Para.10-1.G
28-15030-1	29	Teeter Stop	Rubber bumpers for deterioration or cracks	Excessive cracking or deterioration	Not Repairable	Replace Bumper
			Nicks, scratches, or corrosion	.010 deep	≤ .010 deep	Replace Teeter Stop

UNCONTROLLED COPY WHEN DOWNLOADED OR PRINTED

Visit www.enstromhelicopter.com for instructions to order an original manual and to register for email notification of updates.

Note 1 - If the blade is attached to the grip using 1/4" bolts, a new grip or blade can be installed by Enstrom. The blade and grip assembly will have 5/16"bolts installed. Both of the blade and grip assemblies must have the same size retaining bolts. Do not intermix blade and grip assemblies that have different size retaining bolts.

* All dimensions are in inches.

UNCONTROLLED COPY WHEN DOWNLOADED OR PRINTED

Visit www.enstromhelicopter.com for instructions to order an original manual and to register for email notification of updates.

10-2 STATIC BALANCE

A. Balance Procedure

NOTE: Refer to Fig. 10-1 for numbered items.

(1) Remove bolt (26), washers (27), and nut (28) from the pitch arms if installed.

(2) Install balance mandrel, T-0087-15, through the hub (2). Align plates of the mandrel with the flats of the spindle and with the recesses in the plates in toward the hub.

(3) Rotate blades so that the leading edge of the blades align with the teeter bearings in the spindle (1).

(4) Align pitch arm plates (11) with hole in mandrel and install the bolt through the pitch arms and mandrel. Install the nuts finger tight and ensure the bolt is centered when finished.

(5) Install assembly onto the balancing stand in the vertical position to obtain the chordwise balance (Fig. 10-7).

(6) Determine which direction the lower blade tends to rotate. Rotate the assembly 180° and repeat.

NOTE: If the trailing edge of the blade rises, this is the light blade. If the leading edge of the blade rises, this is the heavy blade.

(7) Rotate assembly 180° and repeat.

(8) Install a short plug screw in the root end of the heavy blade.

NOTE: Use AN515-10 screws of various lengths for balancing.

(9) Install the length of screw and as many AN960-10 or -10L washers as required in the root of the light blade until the assembly will remain stationary in the vertical position.

NOTE: The maximum length of the screw is 3 inches and maximum washer stack up is .5 in/12.7 mm.

(10) If tail rotor assembly will not balance with the maximum weight allowed, adjust the shimming of the center hub (2) by removing a shim (8) from under the teeter bearing end cap (9) on the side of the heavy blade and installing it on the side with the light blade. Use the thinnest shim installed and repeat the chordwise balancing procedure.

(11) Place assembly in the horizontal position to obtain the spanwise balance (Fig. 10-7).

(12) Install a short screw in the heavy blade.

(13) Install the length of screw and amount of washers required until the assembly will remain stationary in the horizontal position. Rotate the assembly 180° and recheck.

UNCONTROLLED COPY WHEN DOWNLOADED OR PRINTED

Visit www.enstromhelicopter.com for instructions to order an original manual and to register for email notification of updates.

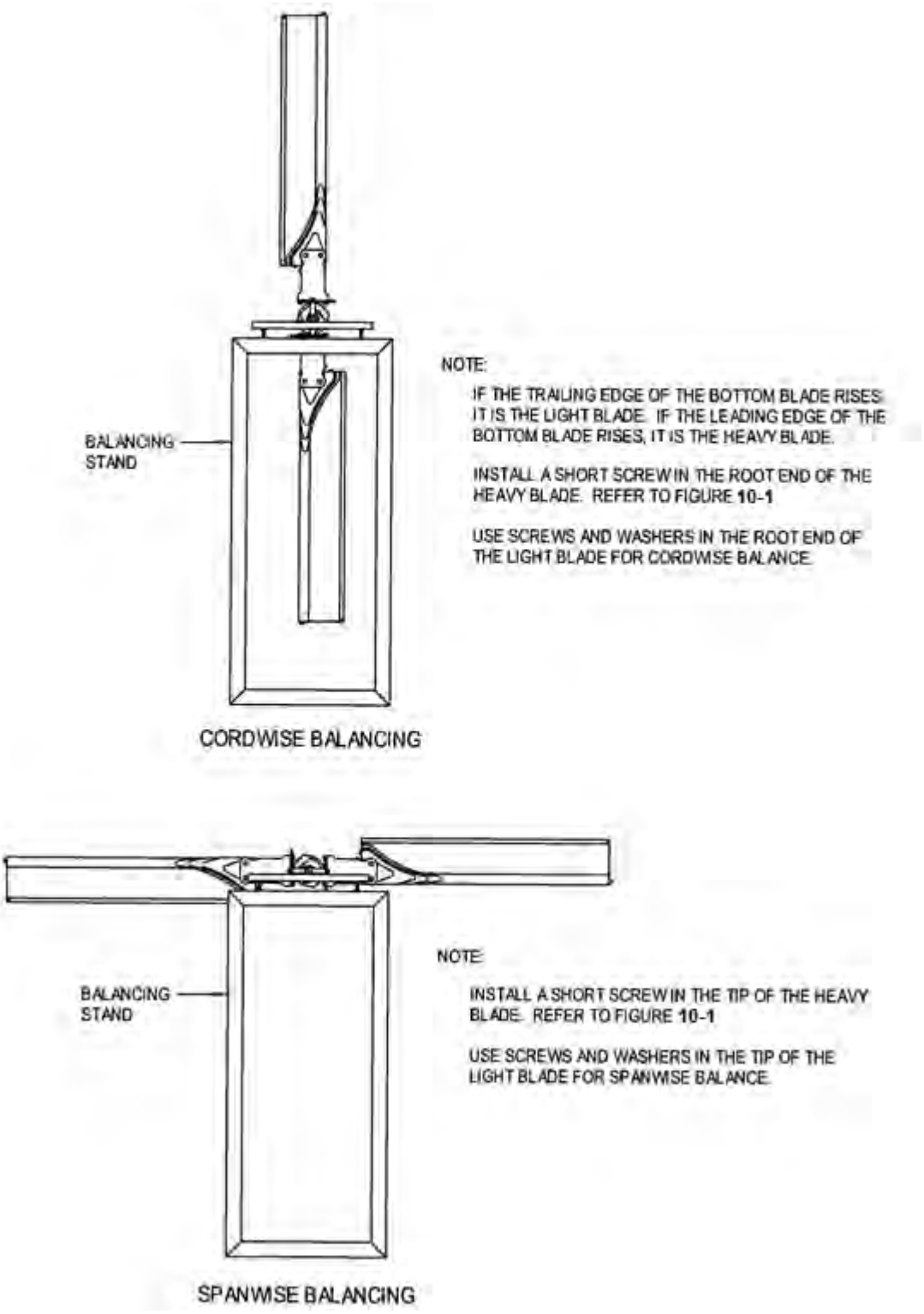

Figure 10-7. Tail Rotor Static Balancing

UNCONTROLLED COPY WHEN DOWNLOADED OR PRINTED

Visit www.enstromhelicopter.com for instructions to order an original manual and to register for email notification of updates.

(14) Recheck static balance at the vertical and 45° positions.

(15) Install strike tabs and tighten all screws.

(16) Remove assembly from the balance fixture and remove the balancing mandrel.

(17) Install bolt (26), washers (27), and nut (28) into pitch arm plate (11). Ensure the head of the bolt is on the inboard side of the plate.

(18) Assembly is ready for installation on the aircraft.

NOTE: It is recommended that all tail rotor assemblies be dynamically balanced on the helicopter.

10-3 TRACKING AND DYNAMIC BALANCE

NOTE: It is not necessary to track the tail rotor blades on Enstrom tail rotor assemblies. Earlier tail rotor assemblies with the 3 piece pitch links should be set to an overall length of 4.26 in/10.82 cm in accordance with Fig. 10-5.

NOTE: The Honeywell-Chadwick 2000 system is described in the following instructions. Follow the operating instructions for the equipment being used if different than the following instructions.

NOTE: The procedure below should work for any of the digital balance systems but if the Velocimeter is installed in the vertical orientation, the polar chart will have to be rotated to compensate.

A. Tracking and Balancing Equipment Installation:

(1) Install optical sensor into the tail rotor balance fixture T-0152.

(2) Install velocimeter onto the right side of the tail rotor transmission under the tail rotor guard mounting nut. The velocimeter should be in a horizontal position with the connector pointing aft (Fig. 10-8).

(3) Connect velocimeter and optical sensor cables and wrap the cable around the stinger tube, around the right side horizontal stabilizer, the right rear oleo, and then into the right side cabin door. Secure the cables to the stinger tube, tailcone, and landing gear with tape.

(4) Install a 1.5 inches piece of reflective tape on one of the grips lengthwise. This will be the target blade (Fig. 10-9).

(5) Connect velocimeter and optical sensor cables to the Balancer box in accordance with the manufacturer's instructions.

UNCONTROLLED COPY WHEN DOWNLOADED OR PRINTED

Visit www.enstromhelicopter.com for instructions to order an original manual and to register for email notification of updates.



Figure 10-8. Velocimeter and T-0152 Installation

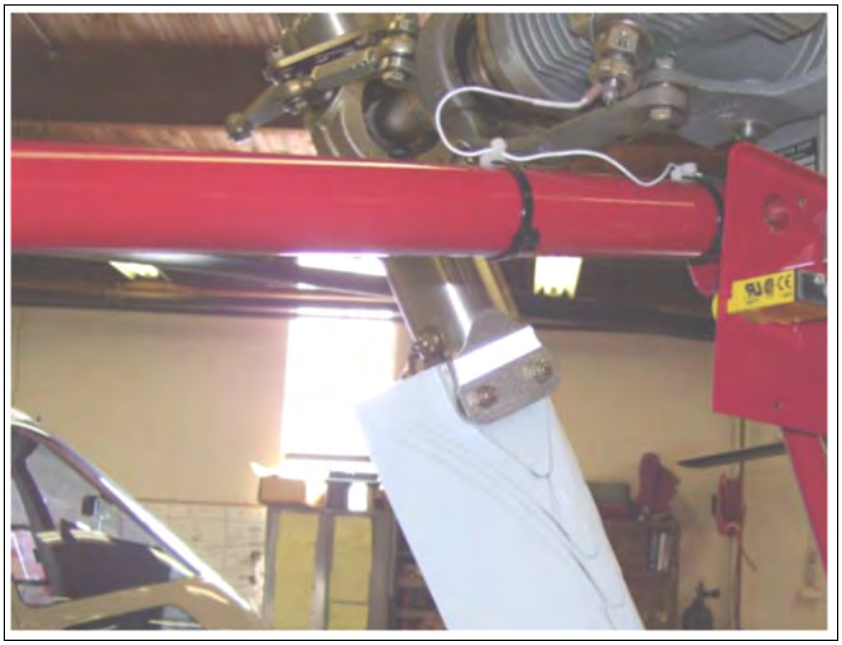

Figure 10-9. Reflective Tape Installed on the Target Blade

UNCONTROLLED COPY WHEN DOWNLOADED OR PRINTED

Visit www.enstromhelicopter.com for instructions to order an original manual and to register for email notification of updates.

B. Tail Rotor Balance Procedure:

WARNING: THE FOLLOWING STEPS ARE TO BE PERFORMED BY AUTHORIZED PERSONNEL.

(1) Position helicopter so the tail rotor transmission output shaft is pointing into the wind (either upwind or downwind).

(2) Ground run the aircraft at 350 main rotor RPM with the tail rotor pedals neutral.

(3) Using the procedures provided by the operation instructions, obtain a clock angle and ips reading from the balance box.

(4) End ground run to stop the blades from turning.

(5) Plot ips reading and clock angle on the tail rotor balance chart (Fig. 10-10).

NOTE: If more than five washers are required on the pitch change link bolts, the teeter hub can be shifted to move the balance fulcrum (Para. 10-3.D). On early production tail rotors, with KP8A or KRP8A( ) bearings, the tail rotor must be removed to shift the teeter hub. On current production tail rotors, the teeter trunnion can be shifted without removing the tail rotor from the helicopter.

CAUTION: IF ADDING OR SUBTRACTING WASHERS FROM THE PITCH CHANGE LINK BOLTS, ENSURE THE CORRECT GRIP LENGTH BOLT IS INSTALLED AND ACCOUNT FOR THE WEIGHT CHANGE OF THE BOLT DURING THE BALANCING PROCEDURE.

NOTE: If the tail rotor is difficult to balance, plot the move lines for both the tip weights and the pitch link weights. If the two move lines are parallel or don't intersect, then remove the tail rotor from the gearbox, turn it 180° and re-install it. It will also be necessary to rotate the trunnion 180° to maintain the 8° lag of rotation (Fig. 10-6).

(6) Add weight in accordance with the chart (Fig. 10-10) and check the clock angle and ips reading of the tail rotor. If the move line of the weight change does not coincide with the move lines on the chart, use the "Clock Angle Correction" procedure (Para. 10-3.C).

(7) Continue tail rotor balance procedure until the ips reading is 0.2 ips or less.

(8) Remove tracking and balancing equipment from the aircraft.

UNCONTROLLED COPY WHEN DOWNLOADED OR PRINTED

Visit www.enstromhelicopter.com for instructions to order an original manual and to register for email notification of updates.

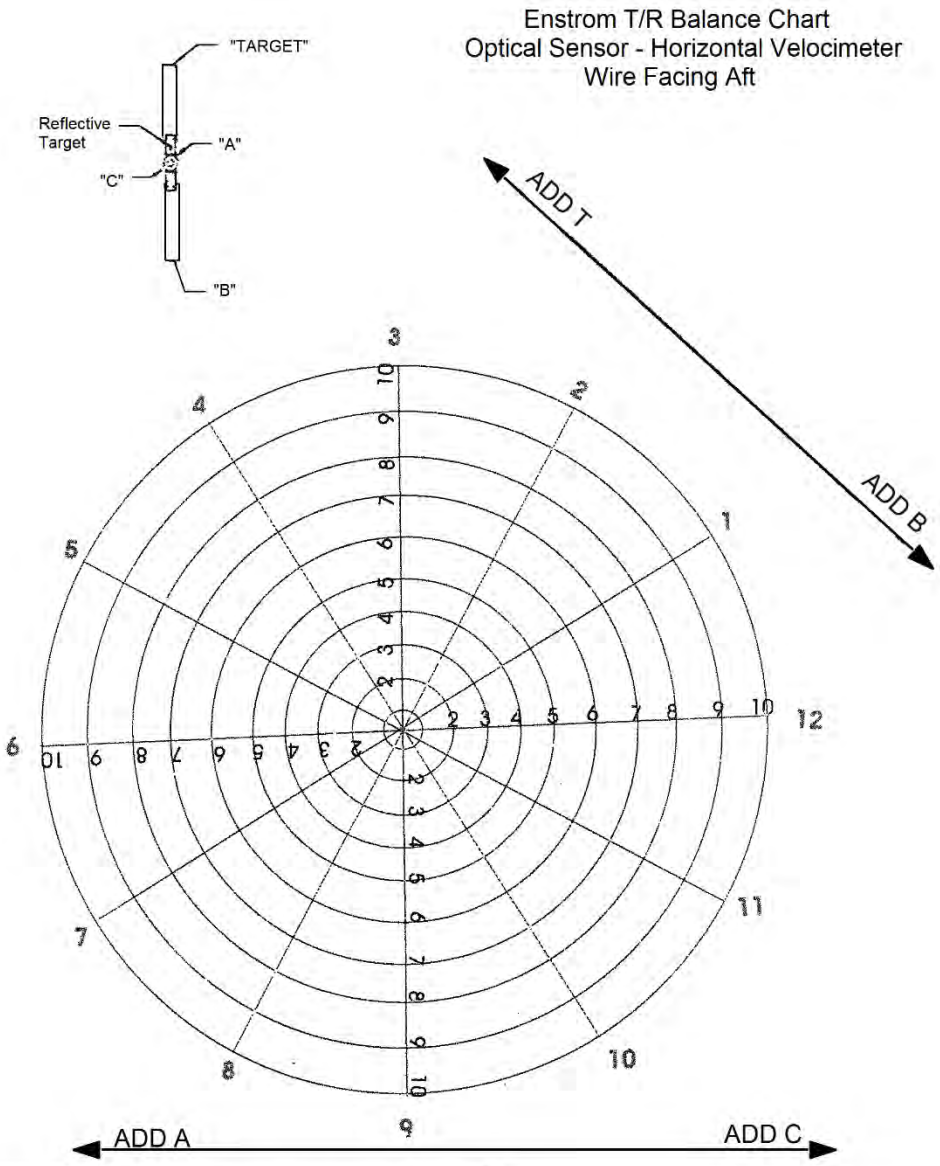

Run	Clock	IPS	Move	Notes
1				
2				
3				
4				
5				
6				
7				
8				
9				
10				

Figure 10-10. Tail Rotor Balancing Chart

UNCONTROLLED COPY WHEN DOWNLOADED OR PRINTED

Visit www.enstromhelicopter.com for instructions to order an original manual and to register for email notification of updates.

C. “Clock Angle Correction” Procedure

(1) Obtain ips reading and clock angle using the procedure in Para. B.

(2) As an example, the following results were obtained: Run 1, ips .55 @ 4:30 clock angle.

(3) Plot Run 1 on the tail rotor polar chart (Fig. 10-11).

(4) Add a small washer (AN960-10L) to the tip at “B”.

(5) Run helicopter again and record the ips reading and clock angle. In this example the following results were obtained: Run 2, 4.5 ips @ 6:30 clock angle.

(6) Plot Run 2 on the chart (Fig. 10-12).

(7) Since the move line between Run 1 and Run 2 did not follow the chart in the expected direction, a correction must be made to the positions of the tip weight line and pitch link weight line relative to the clock orientation.

(8) Drawn a line between plot 1 and plot 2. Label the line “add B”.

(9) Rotate tip weight line approximately 45° clockwise to reflect the actual results of the first weight change.

(10) The relationship between the tip weight line and the pitch link weight line should remain constant; therefore, the pitch link weight line can be rotated 45° clockwise (Fig. 10-13).

(11) Re-plot original target reading (Fig. 10-14).

(12) Remove the AN960-10L washer from tip B and add three 1/4 harper washers to the pitch link position C.

(13) Run helicopter again and record the ips reading and clock angle. The following results were obtained: Run 3, .18 @ 6:00 clock angle (Fig. 10-14).

UNCONTROLLED COPY WHEN DOWNLOADED OR PRINTED

Visit www.enstromhelicopter.com for instructions to order an original manual and to register for email notification of updates.

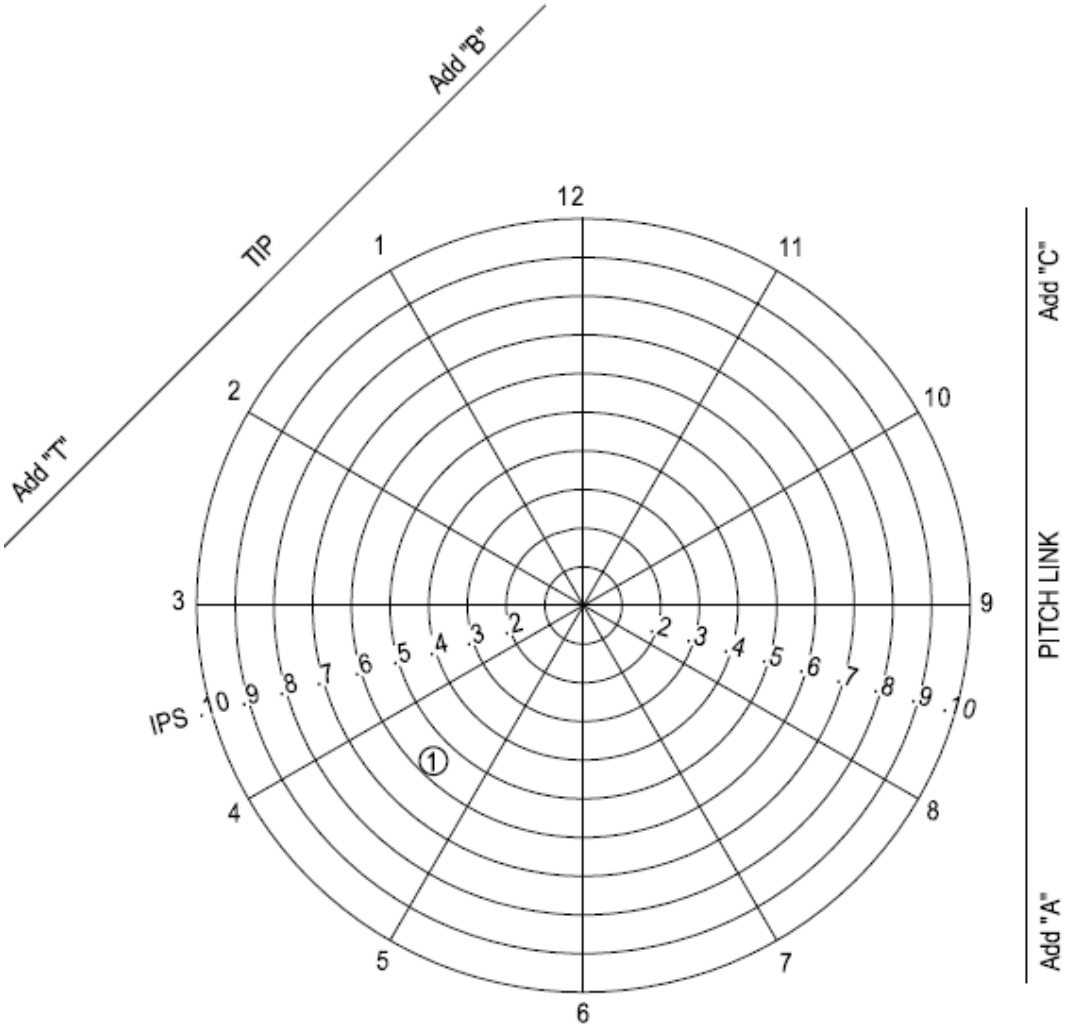

RUN	IPS/CLOCK	
# 1	5.5 @ 4:30	add AN960-10L to B

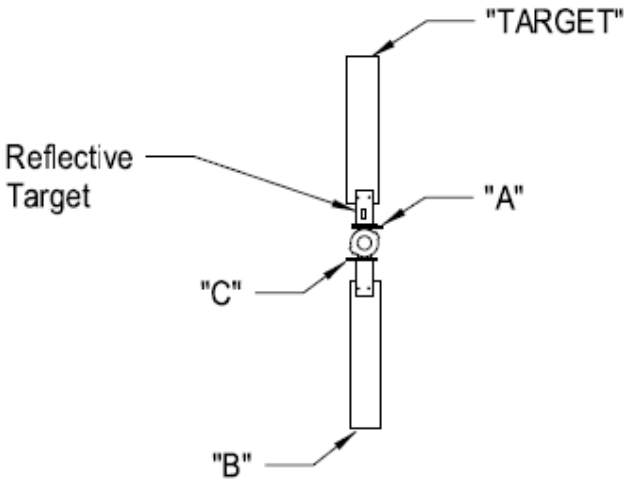

Figure 10-11. Tail Rotor Clock Angle Correction Example

Visit www.enstromhelicopter.com for instructions to order an original manual and to register for email notification of updates.

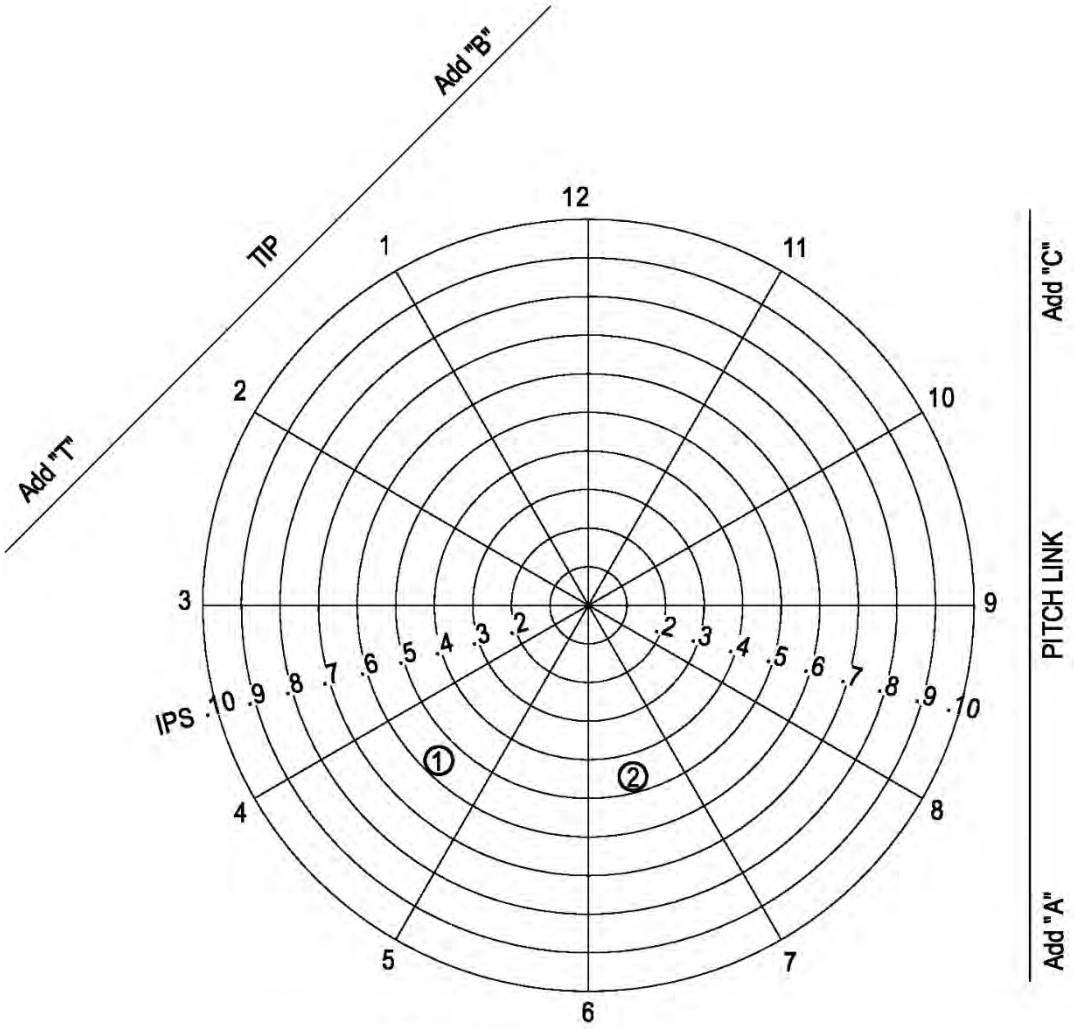

RUN	IPS/CLOCK	CORRECTIVE ACTION
#1	5.5 @ 4:30	add AN960-10L to B
#2	4.5 @ 6:30	

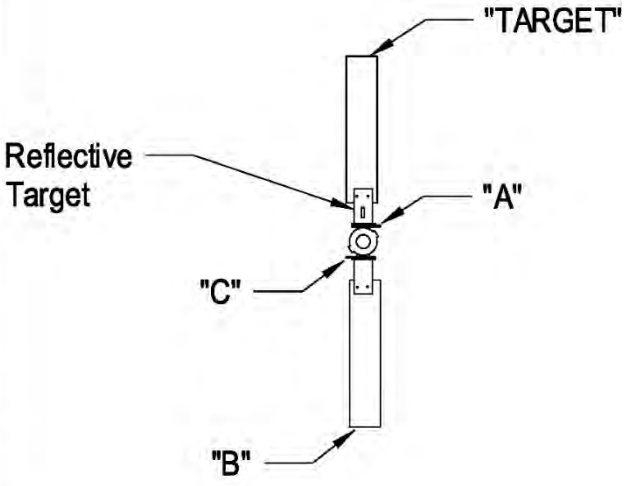

Figure 10-12. Tail Rotor Clock Angle Correction Example

UNCONTROLLED COPY WHEN DOWNLOADED OR PRINTED

Visit www.enstromhelicopter.com for instructions to order an original manual and to register for email notification of updates.

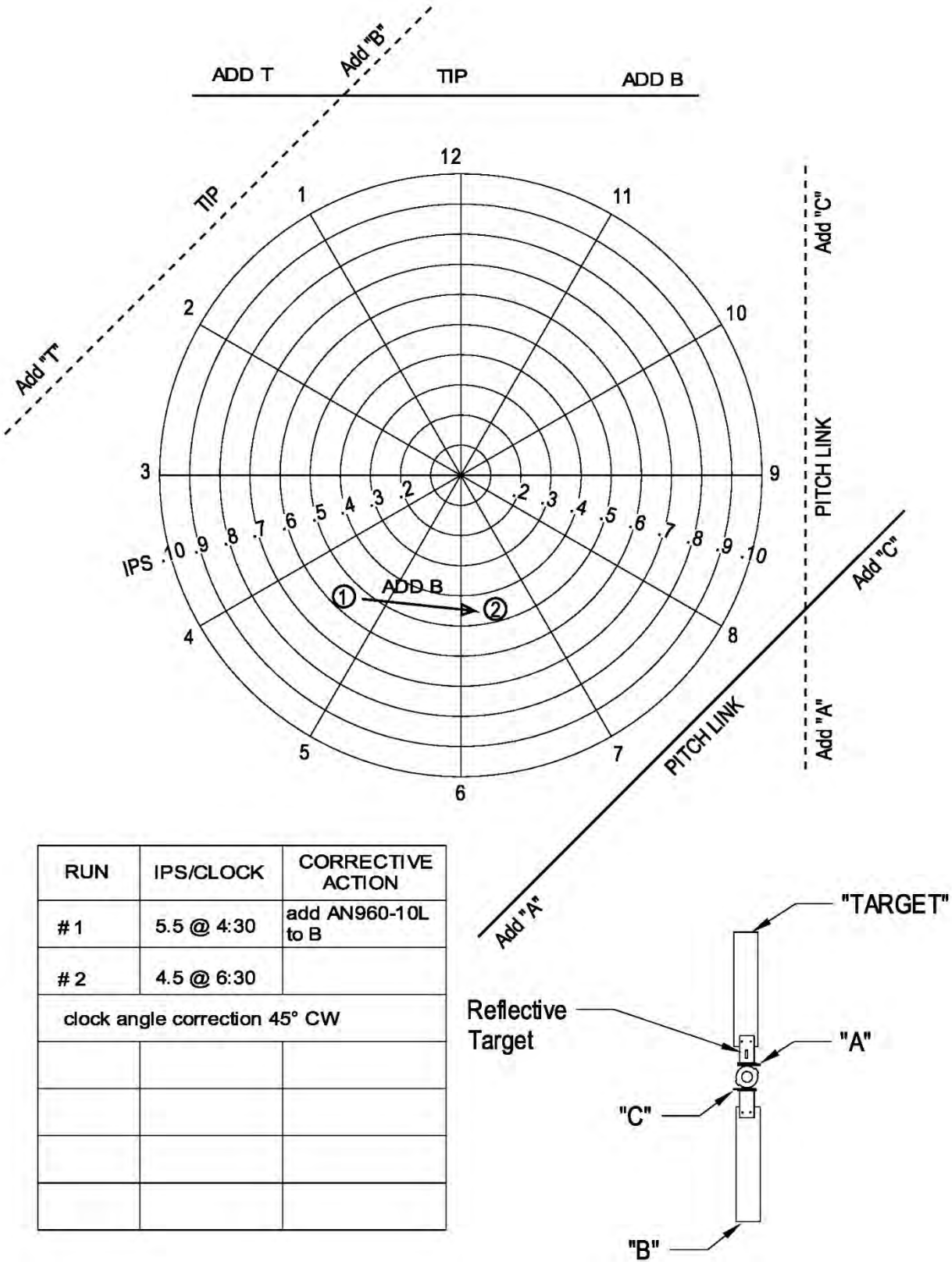

RUN	IPS/CLOCK	CORRECTIVE ACTION
# 1	5.5 @ 4:30	add AN960-10L to B
# 2	4.5 @ 6:30	
clock angle correction 45° CW		

Figure 10-13. Tail Rotor Clock Angle Correction Example

UNCONTROLLED COPY WHEN DOWNLOADED OR PRINTED

Visit www.enstromhelicopter.com for instructions to order an original manual and to register for email notification of updates.

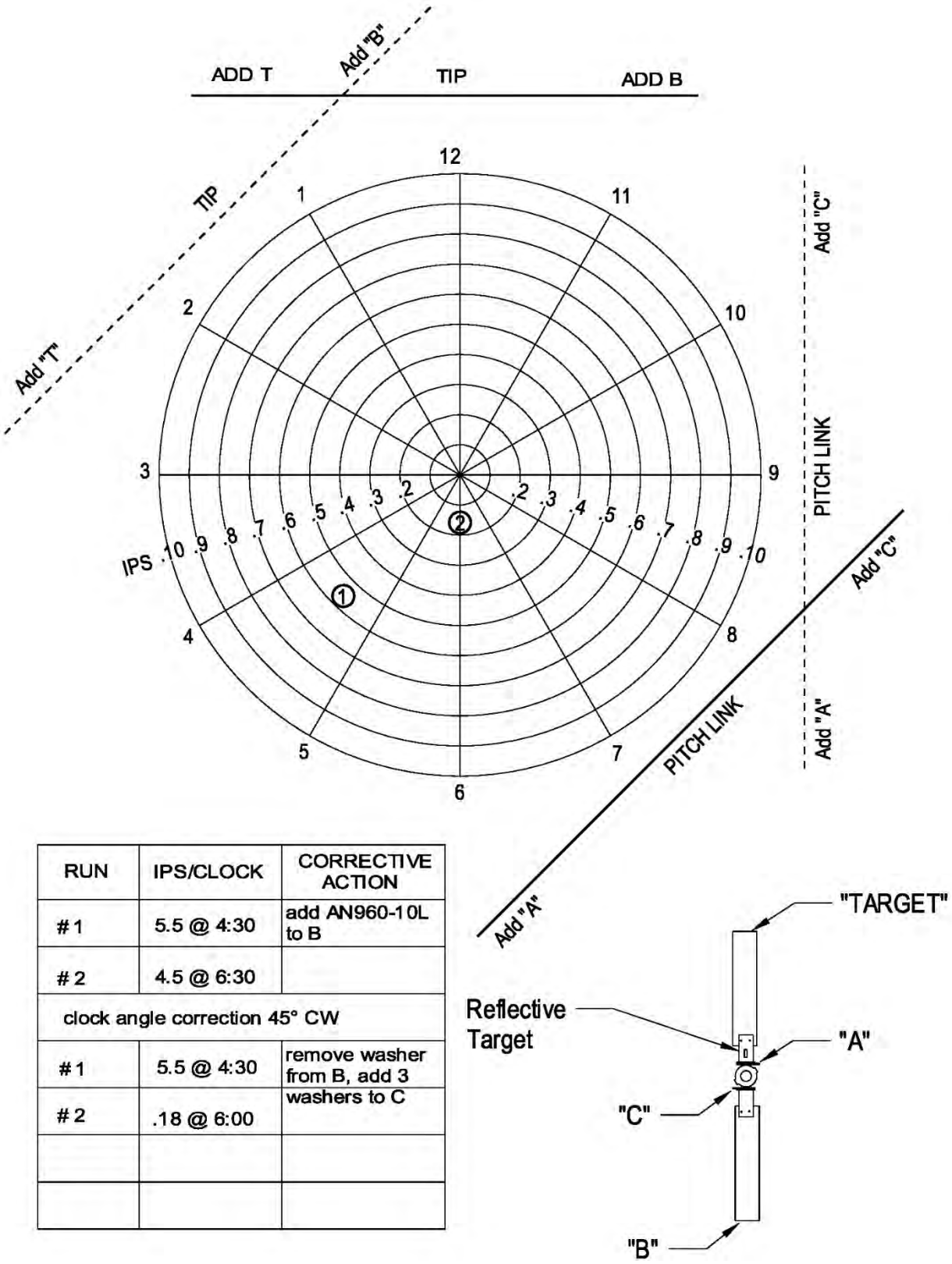

RUN	IPS/CLOCK	CORRECTIVE ACTION
#1	5.5 @ 4:30	add AN960-10L to B
#2	4.5 @ 6:30	
clock angle correction 45° CW		
#1	5.5 @ 4:30	remove washer from B, add 3
#2	.18 @ 6:00	washers to C

Figure 10-14. Tail Rotor Clock Angle Correction Example

UNCONTROLLED COPY WHEN DOWNLOADED OR PRINTED

Visit www.enstromhelicopter.com for instructions to order an original manual and to register for email notification of updates.

D. Teeter Trunnion Shimming Procedure

NOTE: Refer to Fig. 10-1 for numbered items.

NOTE: If more than five harper washers are required to balance the tail rotor in the chordwise axis, it may be necessary to shift the teeter hub to move the balance fulcrum.

NOTE: This procedure can be completed with the tail rotor installed on the helicopter and it is not necessary to disconnect the pitch change links from the tail rotor retention plate.

(1) From the previous example (Para. 10-3.C.(12)), the out-of-balance could be corrected by shifting the teeter hub (changing the balance fulcrum) rather than adding weight to the pitchlink.

(2) The chart calls for adding weight to the pitchlink at point A, which indicates that C is the heavy side of the blade in the vertical (chordwise) balance axis.

NOTE: This procedure can be completed with the tail rotor installed on the helicopter and it is not necessary to disconnect the pitch change links from the tail rotor retention plate.

(3) Remove retaining ring (10) from the tail rotor spindle at the position closest to point C.

(4) Remove end cap (9) and the seal (6). Use caution not to drop the thrust bumper (7) and the shims (8) as they may remain in the cap or stuck to the spindle.

(5) It may be necessary to insert a sharp hooked pick into the center hole of the thrust bumper (7) to withdraw it from inside the cap.

(6) Remove a 0.002 inch or 0.003 inch shim (8) from under the cap and carefully set it aside.

(7) Install shims (8), seal (6), cap (9), and the retaining ring (10) back into the spindle.

(8) Add the 0.002 inch or 0.003 inch shim previously removed from the C side to the shims (8) on the A side of the tail rotor spindle and reassemble the spindle.

(9) Ensure retaining ring is securely seated in the grooves on both sides of the spindle and there is no end play.

(10) Continue with balance procedure.

UNCONTROLLED COPY WHEN DOWNLOADED OR PRINTED

Visit www.enstromhelicopter.com for instructions to order an original manual and to register for email notification of updates.

10-4 TAIL ROTOR PITCH CONTROL ASSEMBLY

NOTE: Refer to Fig. 10-15 for numbered items unless stated otherwise.

A. Removal – Pitch Control

(1) Disconnect pitch change links from pitch link retainer (18).

(a) Remove bolt (1), washer (2), spacers (3), washer (5), and nut (6) to disconnect the pitch change link (4) (Fig. 10-3, right).

(2) Remove tail rotor assembly (Para. 10-1.C).

(3) Remove bolt (5), washers (6) and (8), and nut (9) from the pitch control and control brackets (1) and (2).

NOTE: The stainless steel washers (6) located between the control brackets and iolite bushings of pitch control assembly must be saved for reinstallation.

NOTE: Extra force may be required to slide the pitch change mechanism off the tail rotor output shaft because the keys will force the seal retainer from the pitch change bearing.

(4) Slide pitch control assembly off of chrome sleeve on the tail rotor transmission output shaft.

(5) Remove keys (11), seal retainer (13) and seal (12), from the sleeve.

(6) Disconnect tail rotor control cables from pivot brackets (Fig. 10-30).

(7) Remove bolts (3) and washers (4) securing the pivot brackets (1) and (2) together. Remove the brackets from the transmission.

B. Disassembly – Pitch Control

(1) Remove cotter pins (20) from the retainer (18).

(2) Place pitch link retainer (18) in a small arbor press and press dowel pin (19) through retainer and pitch control bearing (14).

(3) Rotate the retainer and repeat for the opposite pin.

CAUTION: USE A PRESS TOOL THAT EXACTLY FITS THE BRONZE PITCH CONTROL BEARING OR DAMAGE WILL OCCUR TO THE BEARING. HEAT THE BEARING HOUSING AND PITCH CHANGE RETAINER TO 230°F/110°C WITH A HEAT GUN BEFORE ATTEMPTING TO PRESS THE PITCH CONTROL BEARING FROM THE BEARING HOUSING AND THE PITCH CHANGE RETAINER.

(4) Gently press pitch control bearing (14) from the pitch link retainer (18), wave spring washers (17), and bearing (15).

(5) Remove seal (12) from the outboard end of the pitch control bearing (14).

(6) Remove retaining ring (16).

UNCONTROLLED COPY WHEN DOWNLOADED OR PRINTED

Visit www.enstromhelicopter.com for instructions to order an original manual and to register for email notification of updates.

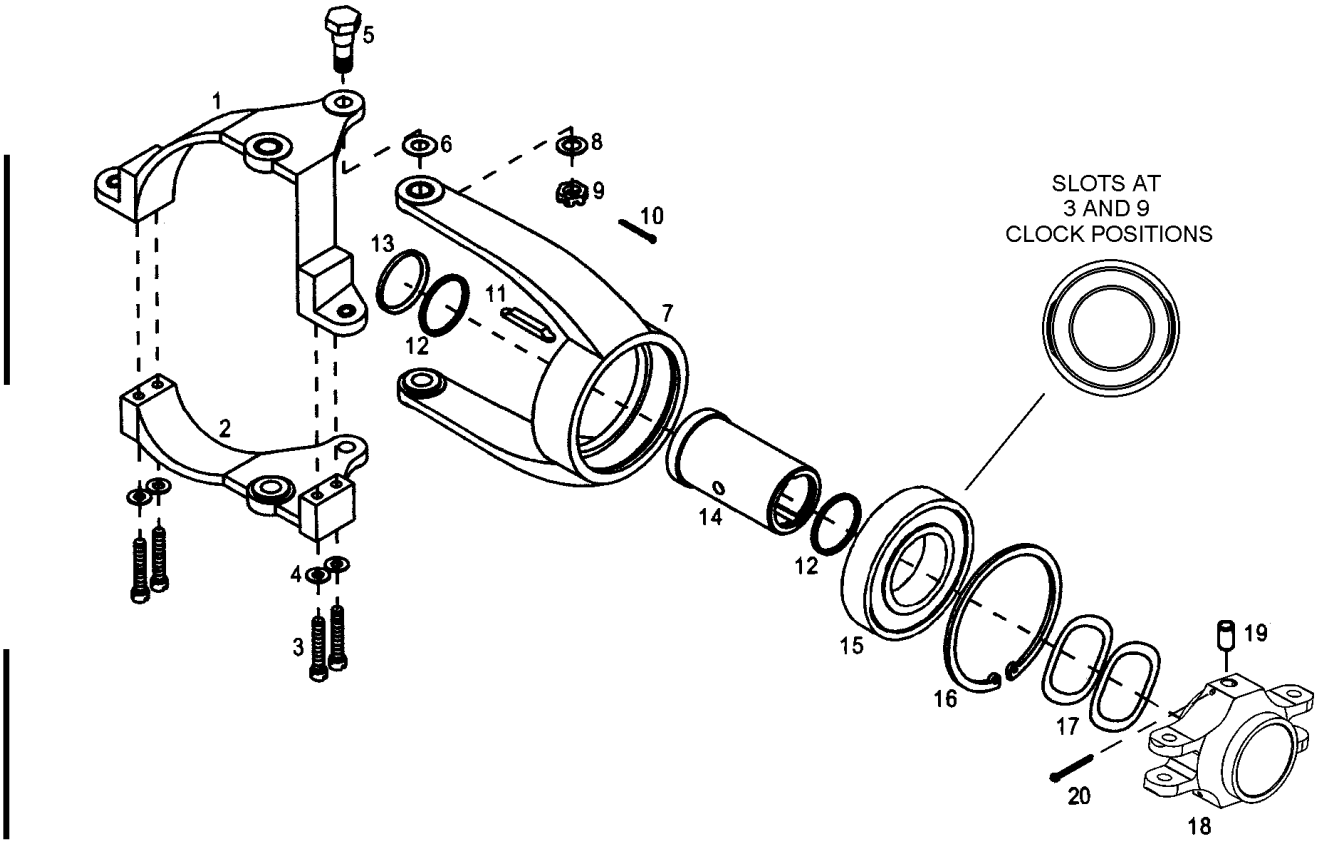

1.	Upper Bracket	11.	Key
2.	Lower Bracket	12.	Seal
3.	Screw	13.	Seal Retainer
4.	Washer	14.	Pitch Control Bearing
5.	Bolt	15.	Bearing
6.	Washer	16.	Retaining Ring
7.	Bearing Housing	17.	Spring Washer
8.	Washer	18.	Pitch Link Retainer
9.	Nut	19.	Pin
10.	Cotter Pin	20.	Cotter Pin

Figure 10-15. Tail Rotor Pitch Control Assembly

UNCONTROLLED COPY WHEN DOWNLOADED OR PRINTED

Visit www.enstromhelicopter.com for instructions to order an original manual and to register for email notification of updates.

WARNING: USE EXTREME CAUTION WHEN REMOVING OR INSTALLING THE BLADE AND GRIP ASSEMBLIES TO PREVENT FROM INJURING PERSONNEL.

WARNING: USE PROTECTIVE GLOVES WHEN HANDLING HEATED PARTS.

(7) Heat bearing housing (7) to approximately 250°/121°C. Gently tap the bearing (15) from the housing.

(8) Clean parts for inspection.

C. Inspection – Pitch Control

(1) See Table 10-2 for the detailed inspection requirements for the tail rotor pitch control assembly.

D. Assembly – Pitch Control

WARNING: USE EXTREME CAUTION WHEN REMOVING OR INSTALLING THE BLADE AND GRIP ASSEMBLIES TO PREVENT FROM INJURING PERSONNEL.

WARNING: USE PROTECTIVE GLOVES WHEN HANDLING HEATED PARTS.

(1) Heat bearing housing (7) to approximately 250°F/121°C. Install bearing (15) into the housing with the slots for removing the inner bearing section facing outboard towards the pitch change link retainer and oriented 90° to the pivot arms of the bearing housing.

(2) Install retaining ring (16) with opening in line with one of the bearing housing (7) pivot arms.

(3) Press pitch control bearing (14) into the bearing (15) in the outboard direction.

(4) Install two wave spring washers (17) onto the pitch control bearing (14).

NOTE: Assembly of the pitch link retainer and bearing can be facilitated by using alignment pins (0.75 in/1.9 cm max. length) fabricated from 1/4 inch bolts (1.5 in long bolt; head and threads removed).

CAUTION: USE GLOVES WHEN HANDLING HEATED PARTS.

(5) Heat pitch link retainer (18) to approximately 230°F/110°C and slide it over the bearing (15). Insert the two alignment pins to align the bearing with the pitch link retainer. When the retainer has cooled, push the alignment pins into the inside of the bushing to remove.

NOTE: If pin holes do not completely line up, gently tap the ear of the pitch link retainer with a plastic mallet until the holes line up.

UNCONTROLLED COPY WHEN DOWNLOADED OR PRINTED

Visit www.enstromhelicopter.com for instructions to order an original manual and to register for email notification of updates.

(6) Press dowel pin (19) into pitch link retainer (18). Rotate retainer and repeat.

NOTE: Seat dowel pins into the pitch link retainer far enough that the cotter pins can be installed. The pins must not extend through the pitch control bearing.

NOTE: Installation of the dowel pins may distort the bottom surface of the pitch control bearing. Check that the inside bearing surface is free of distortion after installing the pins.

(7) Install cotter pins (20) into pitch link retainer (18).

(8) Install the pitch change assembly onto the tail rotor gearbox output shaft to ensure that it will slide on the chrome shaft without binding. It is common for the bronze pitch control bearing (5) to be slightly distorted on the inside in the area of the pins. If this is the case, use a fine tooth (1/2) round file to dress the bearing so it will slide freely.

(9) Install seal (12) into outboard groove of pitch control bearing (14).

E. Installation – Pitch Control

(1) Install pivot brackets (1) and (2) onto the tail rotor transmission. Install bolts (3) and washers (4), torque, and lockwire (.025).

CAUTION: THE CONNECTING LINKS MUST PIVOT FREELY AT THE CABLE CONNECTIONS AND AT THE BELLCRANK AND PITCH CONTROL ASSEMBLY CONNECTIONS.

(2) Connect tail rotor control cables to the pivot brackets.

(3) Slide seal retainer (13) and seal (12) onto the chrome sleeve.

(4) Install keys (11) in slots of sleeve.

(5) Align keyway in pitch control bearing (14) with keys (11) and slide the pitch control assembly onto the chrome sleeve.

(6) Install stainless steel washers (6) between the pivot brackets and the arms of the bearing housing.

(7) Install pivot bolts (5) connecting the brackets to the bearing housing. Install the washers (8) (typically one AN960-6 and one AN960-6L) and locknuts (9). Torque the nuts and align the cotter pin holes. Install the cotter pins (10) and cycle the pivot brackets to check for interference.

(8) Cycle control brackets ensure the pitch control assembly pivots and slides freely.

NOTE: The heads of the pivot bolts must rotate when control brackets are moving. If they do not rotate, check for binding in the bushings.

UNCONTROLLED COPY WHEN DOWNLOADED OR PRINTED

Visit www.enstromhelicopter.com for instructions to order an original manual and to register for email notification of updates.

(9) Install seal (12) into the seal retainer (13). Install the seal retainer into the recessed area of pitch control bearing (14) using tool T-0140. Alternatively, the seal may be installed by tapping it with a small punch.

(10) Install tail rotor assembly (Para. 10-1.K).

(11) Connect pitch change links to the pitch change retainer (Para. 10-1.J.(7)).

NOTE: Omit steps (12) and (13) if no major components of the pitch control assembly were replaced.

(12) Check tail rotor control rigging (Para. 10-7.A).

UNCONTROLLED COPY WHEN DOWNLOADED OR PRINTED

Visit www.enstromhelicopter.com for instructions to order an original manual and to register for email notification of updates.

INTENTIONALLY LEFT BLANK

UNCONTROLLED COPY WHEN DOWNLOADED OR PRINTED

Visit www.enstromhelicopter.com for instructions to order an original manual and to register for email notification of updates.

Table 10-2. Inspection Requirements – Tail Rotor Pitch Control Assembly

Part Number	Fig. 10-15 Item Number	Part Name	Inspect*	Serviceable Limits*	Repair Limits*	Repair or Action
28-16331-1	7	Bearing Housing	Bearing bore 2.6774 to 2.6779	+.0002	Not Repairable	Replace Housing
			Oilite bushing I.D. .3755 to .3765	+.0005	Not Repairable	Replace Housing
			Surface nicks and scratches	None Allowed	≤ .020 deep	Blend and polish out smooth
T-533-023, TS-023	12	Seal	Visual for cuts or tears	None Allowed	Not Repairable	Replace Seal
28-16394-2, -11	14	Pitch Control Bearing	Bronze O.D. 1.3777 to 1.3781	-.0005	Not Repairable	Replace Bearing
			Bore Dia. 1.079 to 1.081	+.001	Not Repairable	Replace Bearing
			Keyway width .1875 to .1895	+.0005	Not Repairable	Replace Bearing
			Dowel pin holes .2450 to .2470 (-2)	+.003	Not Repairable	Replace Bearing
			Dowel pin holes .2490 to .2495 (-11)	+.0005	Not Repairable	Replace Bearing
			Distortion of bore	None Allowed	Not Repairable	Replace Bearing

UNCONTROLLED COPY WHEN DOWNLOADED OR PRINTED

Visit www.enstromhelicopter.com for instructions to order an original manual and to register for email notification of updates.

Table 10-2. Inspection Requirements – Tail Rotor Pitch Control Assembly

Part Number	Fig. 10-15 Item Number	Part Name	Inspect*	Serviceable Limits*	Repair Limits*	Repair or Action
107-KSZZ6, ECD016-11	15	Bearing	O.D. 2.6772	+.0000/-.0005	Not Repairable	Replace Bearing
			I.D. 1.3780	+.0005/-.0000	Not Repairable	Replace Bearing
			Axial movement of the inner race to the outer race	.002	Not Repairable	Replace Bearing
			Ratcheting or roughness	None Allowed	Not Repairable	Replace Bearing
5002-268-PP	16	Retaining Ring	Check for flatness	No Distortion	Not Repairable	Replace Retaining Ring
W1819-020	17	Wave Spring Washer	Check for wave contour	No Flat Spots	Not Repairable	Replace Washer
28-16392-13	18	Pitch Link Retainer	Bore 1.3782 to 1.3787	+.0002	Not Repairable	Replace Retainer
			Dowel pin holes .2490 to .2495	+.0002	Not Repairable	Replace Retainer
			Pitch link retainer bolt holes .250 to .251	+.0005	Not Repairable	Replace Retainer
			Surface nicks and scratches	None allowed	≤ .010 deep	Blend and polish out smooth
28-16397-11	19	Dowel Pin	O.D. .2495 to .2505	-.0005	Not Repairable	Replace Pin

* All dimensions are in inches.

UNCONTROLLED COPY WHEN DOWNLOADED OR PRINTED

Visit www.enstromhelicopter.com for instructions to order an original manual and to register for email notification of updates.

10-5 TAIL ROTOR GEARBOX

A. General Description – Tail Rotor Gearbox

The tail rotor gearbox consists of an aluminum cast housing for a 90° degree miter gear drive, with integral cast mount and control pivot bosses. The gearbox mechanical input is an independently mounted shaft and gear assembly that is retained by a matched pair of duplex ball bearings. The gearbox output to the tail rotor assembly is an internally mounted shaft and gear assembly that is retained by another pair of matched duplex ball bearings.

The tail rotor gearbox is equipped with a magnetic chip detector located in the rear of the bottom of the gearbox. This unit comprises a magnetic plug which locks into a self-sealing base. If the tail rotor gearbox chip light illuminates, follow the procedures in Para. 4-62.B. See Para. 10-5.1 for instructions for removing and inserting the magnetic plug.

B. Troubleshooting – Tail Rotor Gearbox

Problem	Possible Cause	Required Action
Gearbox running hot	Low on oil	Add oil, check sight plug for proper level
	Bad internal bearing	Return to factory or overhaul facility for inspection
Oil leakage	Worn input or output seal shaft	Replace seal
Roughness in bearing operation	Worn or pitted bearings	Return to factory or overhaul facility for inspection
Excessive TIR check on output shaft (.005 max.) Tool T-0068 installed	Gearbox sudden stoppage or tail rotor strike	Return for gearbox overhaul
	Improper spline alignment of chrome sleeve to output shaft	Rotate chrome sleeve at 90° intervals until runout falls in tolerance
Excessive metal particles on mag plug	Large pieces or slivers of metal flaking from gears or bearings	Refer to Para. 4-62.B and 4-62.C
	Fine powdery-type metal can result from normal gear break-in	

C. Removal – Tail Rotor Gearbox

NOTE: It is not necessary to remove the tail rotor assembly from the helicopter for this procedure.

(1) Remove tail rotor assembly, if required (Para. 10-1.C).

(2) Disconnect tail rotor pitch change cables at the gearbox or remove the pivot control brackets (Fig. 10-15) from the tail rotor gearbox with the cables attached.

(3) Disconnect electrical wiring for the chip detector.

UNCONTROLLED COPY WHEN DOWNLOADED OR PRINTED

Visit www.enstromhelicopter.com for instructions to order an original manual and to register for email notification of updates.

(4) On flex coupling, remove the two bolts from aft coupling half only.

(5) Disconnect or remove tail rotor guard.

(6) Remove te safety wire and six screws or bolts, as applicable, that secure gearbox to extension tube.

(7) Remove gearbox by pulling the unit aft with a slight rotational motion.

D. Inspection – Tail Rotor Gearbox

(1) Remove top visual inspection plug and inspect gears and gearbox internally for damage and condition. Install and secure top visual inspection plug (20-60 in-lb/2.3-6.8 Nm).

(2) Rotate output shaft and inspect for any bearing roughness, if any roughness, return transmission for overhaul.

(3) Inspect input shaft taper pin hole for elongation or cracks; return transmission for overhaul if either condition is found.

(4) Inspect input and output shaft seals for leakage. Replace seals if leaking (Para. 10-5.F or Para. 10-5.G, as applicable).

(5) Inspect chip detector for accumulation of metal particles (Para. 10-5.1, Para. 4-62.B.(3)).

E. Installation – Tail Rotor Gearbox

(1) Apply Lubriplate 630-AA (MIL-PRF-81322) to transmission mount.

(2) Insert chip detector wiring through hole in transmission mount.

(3) Install transmission in extension tube. Install mounting bolts and torque to 25 in-lb/2.8 Nm. Lockwire (.032”) bolts.

(4) Connect flex pack coupling to drive hub (Para. 10-6.D).

(5) Connect electrical wiring to the chip detector.

(6) Connect tail rotor guard to the transmission.

(7) Connect tail rotor control cables to pitch control assembly (Para. 10-4.E).

(8) Install tail rotor assembly (Para. 10-1.K).

NOTE**:** Omit steps 9 and 10 if the transmission and tail rotor control assembly being installed are the same ones that were removed.

(9) Check tail rotor control cable tension (Para. 10-7.A).

(10) Check tail rotor control rigging (Para. 10-7.B).

UNCONTROLLED COPY WHEN DOWNLOADED OR PRINTED

Visit www.enstromhelicopter.com for instructions to order an original manual and to register for email notification of updates.

F. Input Seal Replacement – Tail Rotor Gearbox

NOTE: Refer to Fig. 10-17 for numbered items unless stated otherwise.

(1) Drain oil from tail rotor transmission (Para. 4-16.A through C).

NOTE**:** Omit steps 2 through 3 if the transmission is not installed on the aircraft.

NOTE**:** Failure to align the index marks or to return the shims to the original position will require realignment of the tail rotor drive shaft.

(2) Disconnect the aft three drive shaft bearing assemblies (Fig. 10-25) from the tail cone.

(a) Mark drive shaft bearing assemblies and tail cone with an index mark so that the bearing assemblies are installed in the identical lateral positions as previously installed.

(b) Remove hardware securing aft three drive shaft bearing assemblies to the tail cone.

(c) Tape shims and hardware to the tail cone to facilitate reinstallation of the drive shaft bearing assemblies in the same position (returns the tail rotor driveshaft to the same position vertically).

NOTE**:** Failure to align the index marks or to return the shims to the original position will require realignment of the tail rotor drive shaft.

WARNING: DISPLACE THE TAIL ROTOR DRIVE SHAFT THE MINIMUM AMOUNT NECESSARY AS DAMAGE TO THE DRIVE SHAFT MAY RESULT. WHEN REMOVING THE FLEX COUPLING, RETAIN THE ORDER OF THE HARDWARE AND SPACERS FOR RE-INSTALLATION OF THE FLEX COUPLING.

(3) Remove bolts (10) securing flex pack coupling to the aft drive hub (Fig. 10-18). Index mark the drive hub and the flex plate coupling so that the flex pack coupling is installed in the identical position as previously installed.

(4) Remove taper pin (6) (Fig. 10-18) next to the rain slinger (18) (Fig. 10-17) using tool T-0092-5 and remove slinger.

UNCONTROLLED COPY WHEN DOWNLOADED OR PRINTED

Visit www.enstromhelicopter.com for instructions to order an original manual and to register for email notification of updates.

NOTE: Earlier version gearboxes will have two tab washers securing the input seal into the gearbox housing. Later manufactured gearboxes use a retaining ring.

(5) Remove seal retaining ring (15) or two retaining tabs (16), as applicable.

(6) Using an awl or small screwdriver, carefully remove the input shaft seal, (14) (P/N 1539-001). Note the part number on the seal. Use the same part number for the seal, when installing the new seal.

NOTE: Do not remove the screws that secure the bearing housing to the gearbox housing. Do not remove the lead seal from the input shaft assembly. Removal of the seal will void the warranty on the tail rotor transmission.

(7) Clean tail rotor transmission seal surface and the O.D of new seal (14).

(8) Install seal (14).

(a) Apply a small amount of MIL-PRF-2105 to the O.D. and I.D. of the seal and the seal lip.

(b) Wrap stainless steel shim stock around the input shaft nut to protect the seal lip during installation.

(c) Use a soft plastic or rubber hammer or other suitable press tool to tap the seal into place.

(9) Install retaining ring (15) or the retaining tab washers (16), as applicable.

(a) Torque tab washer screws to 25 in-lb/2.8 Nm and lockwire if using the retaining tabs.

(10) Install slinger (18) and taper pin (6) (Fig. 10-18). Torque to 25 in-lb/2.8 Nm.

(11) Install flex coupling. Install all hardware, spacers, and washers in the same position as previously installed.

(12) Install three drive shaft bearing assemblies.

NOTE: Install the bearing assemblies to the index marks (as previously installed). If not properly marked for reinstallation, the tail rotor drive shaft will require alignment.

(a) Use same shims, spacers, and bolts (retained in place with tape) for each bearing assembly.

(b) Align bearing assemblies laterally to the index marks.

(c) Torque bolts to 35 in-lb/4.0 Nm.

(13) Service tail rotor transmission (Para. 4-15).

UNCONTROLLED COPY WHEN DOWNLOADED OR PRINTED

Visit www.enstromhelicopter.com for instructions to order an original manual and to register for email notification of updates.

G. Output Seal Replacement – Tail Rotor Gearbox

(1) Drain oil from tail rotor transmission (Para. 4-16.A through C).

(2) Remove tail rotor assembly (Para. 10-1.C; omit step 4).

(3) Remove pitch control bearing assembly (Fig. 10-15).

NOTE: Retain all hardware together for re-installation.

(a) Disconnect bearing housing (7) from pivot brackets (1) and (2) by removing bolts (5), washers (6) and (8), nut (9), and cotter pins (10) (Fig. 10-15).

(b) Index mark the position of the sleeve as installed on the output shaft.

(c) Slide pitch control assembly off of the sleeve of the tail rotor transmission output shaft.

(d) Remove keys (11), seal (12), and seal retainer (13).

(4) Remove retaining ring (20) from output shaft seal (19) (Fig. 10-17).

NOTE: As the seal (19) is removed from the output shaft, the sleeve (21) will also be removed with it. Wrapping the end of the output shaft with masking tape may help prevent the sleeve from being displaced when the seal is removed. Clean the area prior to applying tape.

Otherwise, mark the sleeve spline to the output shaft spline so as to install the sleeve in the same location on the output shaft on reassembly.

(5) If preferred, wrap the end of the output shaft with masking tape, otherwise clean the spline edges of the output shaft and sleeve and apply a paint stripe across the splines.

(6) Using an awl or small screwdriver, carefully remove the seal (19). Note the part number on the seal. Use the same part number for the seal, when installing the new seal.

(7) Install new seal (19).

NOTE: It may be necessary to chamfer the inboard edge of the new seal using 200 grit sandpaper, or equivalent, for ease of installation.

(a) Clean tail rotor transmission seal surface and O.D. of new seal.

(b) Lubricate (MIL-PRF-2105) the O.D. and inside lip of new seal.

CAUTION: BE CAREFUL NOT TO TEAR THE NEW SEAL WHEN TAPPING THE SEAL INTO PLACE.

(c) Use a soft plastic or rubber hammer or other suitable press tool to tap seal into place.

UNCONTROLLED COPY WHEN DOWNLOADED OR PRINTED

Visit www.enstromhelicopter.com for instructions to order an original manual and to register for email notification of updates.

NOTE: Positioning the sleeve on the output shaft in a location different than previously installed may affect the runout (TIR) and negatively affect the rail rotor balance. Output shaft runout may be checked in accordance with Para. 10-5.H.

(8) If required, install sleeve (21). Match spline mark of the sleeve to the spline mark on the output shaft.

(a) Lubricate (MIL-PRF-2105) seal end of sleeve (21).

(b) Use a bushing driver or equivalent press tool, push the sleeve (21) into the seal (19). The seal seats in a groove of the sleeve (21).

(9) Install retaining ring (20).

(10) Place seal retainer (13) and seal (12) onto output shaft.

(11) Install two keys (17) into key slots in sleeve (21).

(a) Lubricate (MIL-PRF-81322) keys (17) during installation and prior to installing pitch control assembly.

NOTE: Take care to align the pitch control assembly to the index marks. If the pitch control assembly cannot be realigned to the original index marks, the tail rotor assembly must be dynamically balanced.

(12) Install pitch control assembly (Fig. 10-15).

(a) Align pitch control assembly to the index marks on the sleeve and slide the assembly onto the tail rotor transmission output shaft.

(b) Insert seal (12) into the groove in the pitch control bearing (14).

CAUTION: BE GENTLE WHEN INSERTING THE SEAL RETAINER (13). EXCESSIVE FORCE WILL DAMAGE THE SEAL RETAINER.

(c) Use a small straight screwdriver or punch and a small hammer to tap the seal retainer (13) into the groove in the pitch control bearing (14).

(13) Install pivot brackets (Fig. 10-15).

NOTE: Washer (6) must be installed between the upper pivot bracket (1) and the bearing housing (7).

(a) Install bolts (5), washers (6) and (8), and nut (9).

(b) Torque nuts to 60-85 in-lb/6.8-9.6 Nm and install new cotter pins (10).

(14) Install tail rotor blade assembly (Para. 10-1.K).

(15) Install bottom plug (Para. 4-16.D) and service tail rotor transmission (Para. 4-15).

UNCONTROLLED COPY WHEN DOWNLOADED OR PRINTED

Visit www.enstromhelicopter.com for instructions to order an original manual and to register for email notification of updates.

H. Output Shaft Runout – Tail Rotor Gearbox

(1) Runout of the output shaft is checked as follows: (.005-inch Total Indicated Runout (TIR) maximum.) (Fig. 10-16)

(a) Secure gearbox in a vise if removed from the helicopter.

(b) Install sleeve T-0068 on output shaft. Install spacer T-0068 and torque bolt to 300 in-lb/34.1 Nm.

(c) Position height gauge and dial indicator with indicator arm on outboard diameter of T-0068.

(d) Zero dial indicator and rotate the input shaft. Note output shaft TIR.

(e) If runout exceeds .005 TIR, remove bolt and tool. Remove output seal. Reposition sleeve on output shaft in one spline intervals until runout falls within tolerance.

NOTE: If the tail rotor components are installed in the exact position as removed, the dynamic balance step (Para. 10-3) may be omitted

NOTE: If the tail rotor components are not installed in the exact position as removed, the tail rotor must be balanced.

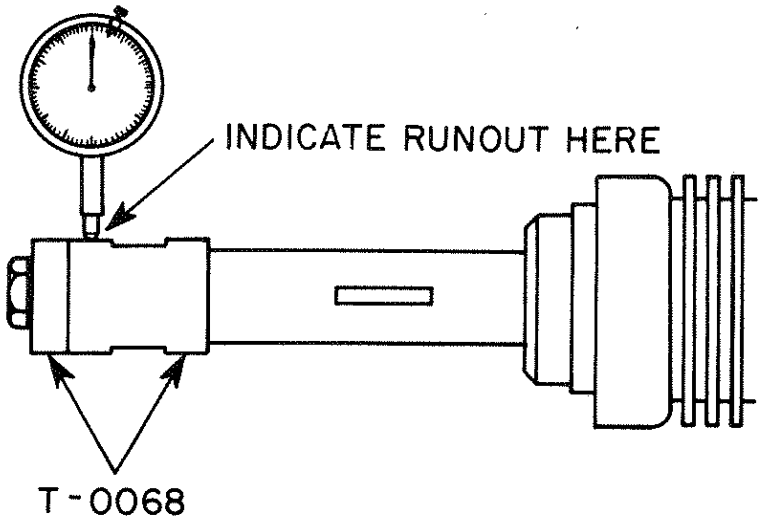

Figure 10-16. TIR Indicator for the Output Shaft

UNCONTROLLED COPY WHEN DOWNLOADED OR PRINTED

Visit www.enstromhelicopter.com for instructions to order an original manual and to register for email notification of updates.

10-5.1 TAIL ROTOR GEARBOX CHIP DETECTOR

NOTE: The following procedure applies to gearbox installations having the self-sealing base for the magnetic plug (Fig. 10-17, Detail A).

NOTE: Refer to Para. 4-62.B.(3) for metal particle criteria limits.

A. Removal – Tail Rotor Gearbox Chip Detector

(1) Do not disconnect the wire.

(2) Grasp the magnetic plug (11) and push upward. While holding upward pressure, begin turning plug counter-clockwise.

(3) Turn plug (11) counter-clockwise one-quarter turn.

(4) Pull plug (11) out of the socket in the base fitting (27).

B. Installation – Tail Rotor Gearbox Chip Detector

(1) After inspection and after determining that the transmission is airworthy, clean the magnetic plug (11) with a soft cloth or with a strong magnet attached to a pointed object or use compressed air. Use caution to avoid scratching the magnetic plug.

(2) Insert plug (11) into the socket in the base fitting (27).

(3) Align lugs in the plug (11) with the slots in the base fitting (27).

(4) Push plug (11) upward while turning the plug clockwise (approximately one-quarter turn).

(5) When plug (11) stops turning, pull downward.

(6) Check plug (11) to ensure that it is locked in the base (27).

UNCONTROLLED COPY WHEN DOWNLOADED OR PRINTED

Visit www.enstromhelicopter.com for instructions to order an original manual and to register for email notification of updates.

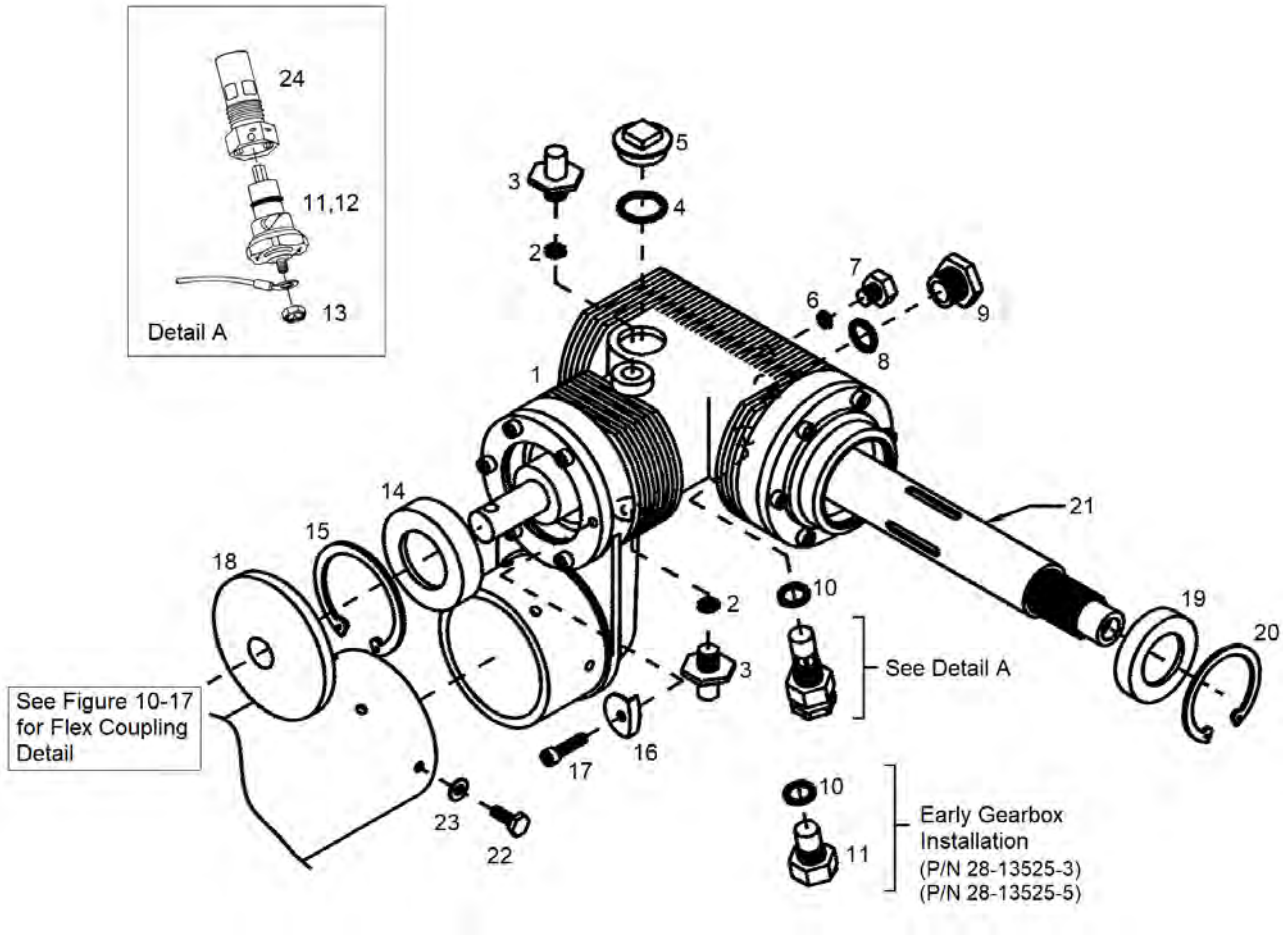

1.	Tail Rotor Gearbox Assembly	13.	Nut
2.	O-Ring	14.	Seal
3.	Bolt	15.	Retaining Ring
4.	O-Ring	16.	Tab (omitted if (15) is used)
5.	Plug	17.	Screw
6.	O-Ring	18.	Slinger
7.	Plug	19.	Seal
8.	O-Ring	20.	Retaining Ring
9.	Sight Plug	21.	Sleeve
10.	Gasket (Crush Washer)	22.	Bolt
11.	Magnetic Plug/Chip Detector	23.	Washer
12.	O-Ring	24.	Chip Detector Base

Figure 10-17. Tail Rotor Transmission Assembly

UNCONTROLLED COPY WHEN DOWNLOADED OR PRINTED

Visit www.enstromhelicopter.com for instructions to order an original manual and to register for email notification of updates.

10-6. TAIL ROTOR DRIVESHAFT

A. Alignment – Tail Rotor Driveshaft

(1) (280FX) Remove aft tail rotor drive shaft cover and open remaining covers.

(2) Clamp piano wire attachment tools T-0088 to each end of the driveshaft. Attach the piano wire between the tools and center it vertically down the centerline of the driveshaft.

NOTE: If the alignment tools differ in height greater than allowable, it is not possible to obtain proper alignment of the tail rotor drive shaft.

(3) Verify alignment tool heights are within ±.001 inch at the forward and aft positions as follows:

(a) Using a set of calipers, measure the distance between the wire and short shaft approximately 1 inch aft of the forward alignment tool.

(b) Measure distance between the wire and the long shaft 1 inch forward of the aft alignment tool.

(c) The difference between the two previous measurements should be no greater than .002 inch.

(d) If the alignment tool heights are outside allowable limits, it will be necessary to file the high/tall alignment tool saddle (the location where the piano wire rests in the alignment tool) to obtain the proper height. File the saddle and measure per step c) until the proper tolerance of ±.001 inch is obtained.

(4) Starting at the forward drive shaft bearing assembly, measure the distance between the drive shaft and the piano wire. Repeat this for the remaining drive shaft bearing assemblies. The vertical difference at any position should be within ±.012 inch. If the difference is greater than ±.012 inch, add or subtract shims under the bearing assembly to bring the shaft into proper alignment. Tighten the hardware and recheck the alignment after each adjustment.

NOTE: Ensure the tail rotor drive shaft bearing hardware is properly torqued before taking measurements and after each adjustment.

(5) When proper vertical alignment is achieved, rotate the tail rotor drive shafts 90° to check the lateral alignment.

a) Starting at the forward drive shaft bearing assembly, measure the distance between the drive shaft and the piano wire. Repeat this for the remaining drive shaft bearing assemblies. The lateral difference at any position should be within ±.012 inch. If the difference is greater than ±.012 inch, loosen the bearing assembly hardware and shift the position of the bearing assembly. Tighten the hardware and recheck the alignment.

UNCONTROLLED COPY WHEN DOWNLOADED OR PRINTED

Visit www.enstromhelicopter.com for instructions to order an original manual and to register for email notification of updates.

(6) (280FX) Check the drive shaft cover bracket alignment by temporarily installing the drive shaft aft cover. Adjust the bracket, if required.

(7) Torque the drive shaft bearing assembly mount bolts to 20-25 in-lbs/2.3-2.8 Nm and recheck the vertical and lateral alignment. Adjust as required.

(8) Lockwire (MS20995C32) the aft drive shaft bearing assembly mounting hardware. Route the lockwire under the bearing assembly to avoid interfering with the drive shaft.

(9) Remove the alignment tools from the drive shafts.

(10) (280FX) Close the drive shaft covers and install the aft cover.

B. Removal – Driveshaft

(1) (280 FX) Remove the aft tail rotor drive shaft cover and open the remaining covers.

(2) Remove the upper cowling and the side cowling from one side.

(3) Remove tach drive cover and remove O-rings from pulley. (See Para. 10-6.3 for optional tach drive cover modification.)

(4) Disconnect the forward and aft couplings (Para. 10-6.1.B.(1) through (2)).

(5) Remove the anti-collision light from top of tailcone, if required.

(6) (280F) Remove the top vertical stabilizer from aft end of tailcone.

(7) Mark the pillow blocks to the tailcone to assist with alignment during installation.

(8) Remove bolts and washers attaching pillow blocks to tailcone.

NOTE: Save shims for reinstallation. Temporarily tape the shims to the tailcone in the respective positions.

(9) (280FX) Remove the drive shaft cover bracket from under the aft drive shaft bearing assembly.

(10) Remove the driveshaft assembly from tailcone.

C. Disassembly – Driveshaft

(1) Remove the taper pins and couplings from forward and aft ends of driveshaft. Use tool T-0092-5 to remove the taper pins.

(2) Slide the tach drive cover and O-rings from the shaft.

(3) Separate and remove the tach drive pulley.

(4) Apply lubricant (soapy water) to the driveshaft and slide the pillow blocks from the shaft.

UNCONTROLLED COPY WHEN DOWNLOADED OR PRINTED

Visit www.enstromhelicopter.com for instructions to order an original manual and to register for email notification of updates.

D. Inspection – Driveshaft

(1) Straightness. Sharp kinks or bends that exceed .030 inch per foot section/.76 mm per 1 meter section are cause for rejection.

(2) Nicks and scratches.

(a) Examine the driveshaft surface for nicks and scratches. Include inspection of the circumference of the driveshaft where the driveshaft passes through the tach drive pulley guard hole.

1 Nicks or scratches not deeper than 0.030 inch/0.76 mm may be blended out. Apply corrosion protection after repair.

2 Nicks or scratches in excess of 0.030 inch/0.76 mm are cause for rejection.

(b) If either conditions 1 or 2 are present as a result of contact with the pulley guard, proceed as follows:

1 Verify driveshaft straightness (step (1)) and alignment (Para. 10-6.A).

2 Inspect pulley guard installation for mount, security, and damage. Replace a damaged pulley guard.

3 (Optional) Modify the tach drive cover in accordance with Para. 10-6.3.

(3) Taper pin holes for elongation, excessive diameter, and cracks. Any are cause for rejection.

(4) Corrosion or rust, especially under rubber inserts. Pits that exceed .030 inch/.76 mm in depth are cause for rejection.

E. Installation – Driveshaft

NOTE: Procedure steps (1)-(12) applies to installing a replacement driveshaft. Fabrication of a replacement drive shaft requires additional skill and equipment. It is recommended to contact Enstrom for a replacement driveshaft assembly.

NOTE: If re-installing a removed driveshaft, proceed to step (13).

NOTE: When installing a tail rotor driveshaft, both the main rotor and tail rotor gearbox must be installed on aircraft. Install a coupling half secured with a taper pin in each gearbox.

(1) Ream the bore on one end of driveshaft with a .640-inch straight reamer to remove paint. Ream 2" into bore and deburr the end of the shaft.

(2) Clean the bore ends of the driveshaft and O.D. of aluminum plugs with Loctite Primer T.

(3) Apply epoxy prime (MIL-PRF-23377 Type I Class 2C or Class N) to the O.D. of aluminum plug, heat driveshaft to approximately 250°F/121°C and tap plug into driveshaft until it is flush with the end of the shaft.

(4) Drill the aft coupling as follows: (see Fig. 10-18)

(a) Mark a line on the driveshaft 7/8" from the end of the shaft.

UNCONTROLLED COPY WHEN DOWNLOADED OR PRINTED

Visit www.enstromhelicopter.com for instructions to order an original manual and to register for email notification of updates.

(b) Slide the coupling on the shaft until even with the 7/8" line.

(c) Mark and center-punch Point "A" of Fig. 10-18 using dimensions given.

(d) Drill through the coupling and driveshaft with a "D" size drill (Ø.2460 inch).

NOTE: Drilling must be done in a drill press to assure that drilled hole is perpendicular to the driveshaft.

(e) Ream the hole with a #2 tapered reamer to fit an AN386-2-8A taper pin very carefully so as not to over ream.

NOTE: If over-reaming of a tapered hole occurs, use P/N 28-13623-11 through -17 taper pins as required.

NOTE: Taper pins should be seated by tapping into place and then secured with the nut.

(f) Install the taper pin through the coupling. Install cup washer (7) or washer (8), and nut (9). Torque nut (25 in-lb/2.8 Nm) (Fig. 10-21).

(5) Temporarily slide forward coupling half on the forward end of the driveshaft and place the driveshaft on the tailcone.

(6) Reassemble the couplings together such that the flanges are in alignment. Install equal thickness spacers between the flex pack and the flanges. An alternate method is to use a .235-inch aluminum block. Refer to Fig. 10-19 for either option.

(7) Mark the location of the forward coupling on the driveshaft using a felt marker and mark the location of the pillow blocks on the driveshaft.

(8) Remove the driveshaft from the tailcone.

(9) Remove the forward coupling from the driveshaft.

(10) Add 7/8" from the mark on the driveshaft and mark a new line for the end of the driveshaft. Cut the shaft to length.

NOTE: Do not cut the driveshaft at the initial coupling position mark.

(11) Ream the forward end of the driveshaft with .640-inch reamer to remove paint.

(12) Drill the forward coupling to the driveshaft following the procedure in step (4) (Fig. 10-18).

(13) Install the driveshaft on the tailcone and connect both couplings per step (6) (Fig. 10-21).

NOTE: Taper pins on both the main rotor and the tail rotor gearbox sides of the coupling are AN386-2-7A.

(14) Mark the driveshaft for the pillow block alignment to the mount holes in the tailcone.

NOTE: Place a ¾-inch block of wood under the driveshaft to remove the bow in shaft while marking the pillow block areas.

UNCONTROLLED COPY WHEN DOWNLOADED OR PRINTED

Visit www.enstromhelicopter.com for instructions to order an original manual and to register for email notification of updates.

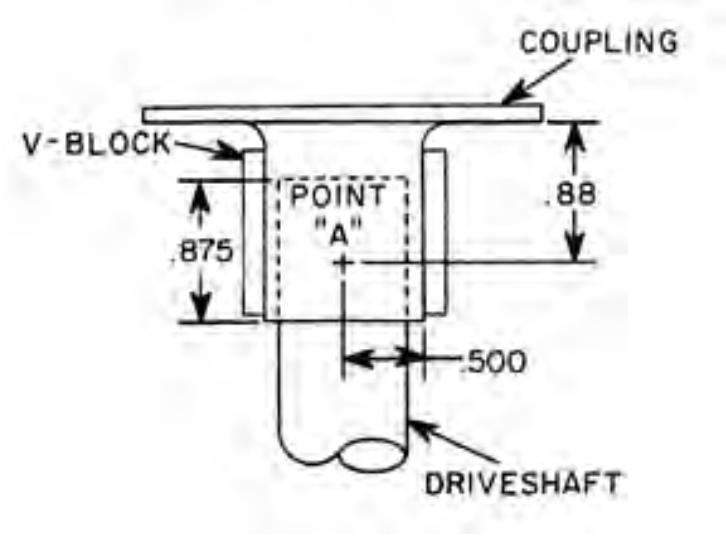

Fig. 10-18

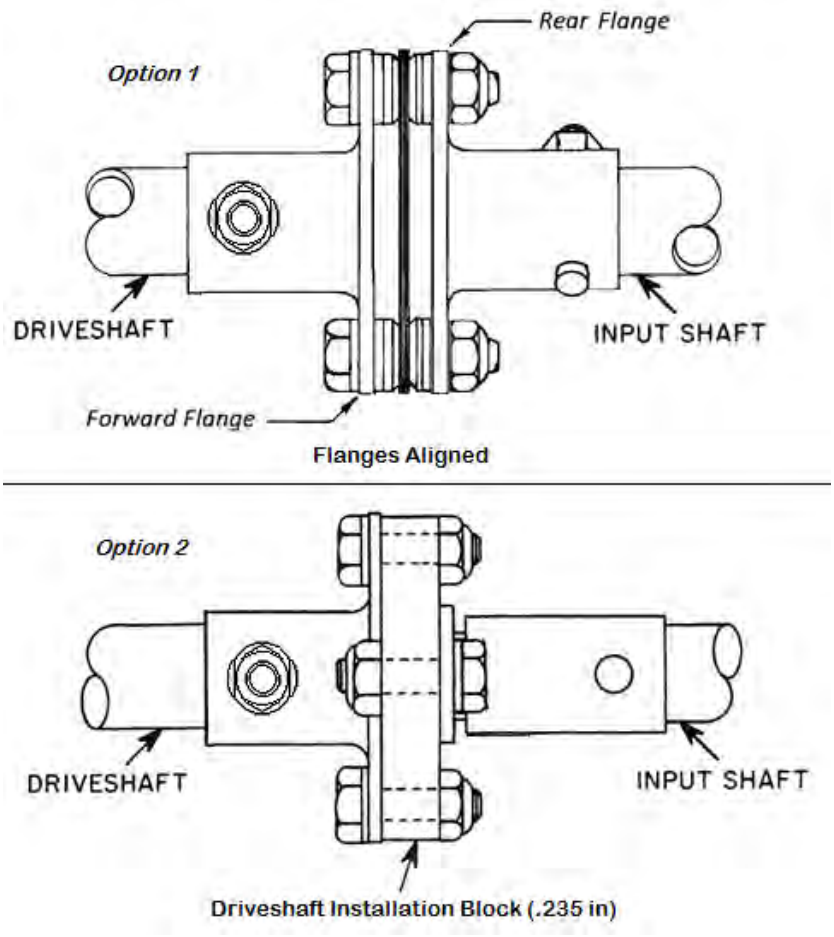

Figure 10-19

Visit www.enstromhelicopter.com for instructions to order an original manual and to register for email notification of updates.

(15) Remove the driveshaft and the forward coupling.

(16) Wipe the driveshaft with liquid detergent and slide the pillow blocks into the marked positions. See Fig. 10-20 for the direction of the pillow blocks on the driveshaft.

NOTE: The forward pillow block is installed with the closed end facing aft.

(17) Place the driveshaft back on the tailcone and connect the couplings to the transmissions.

(18) Align the pillow blocks with the mount holes in the tailcone.

(19) Install the tach drive pulley on the driveshaft.

(20) Disconnect the forward coupling and install the tach drive O-rings and cover. Connect the coupling.

(21) (280FX) Install the driveshaft cover bracket and shims under the aft drive shaft bearing assembly. Temporarily install the bearing shim stack-ups and mounting hardware.

(22) Align the tail rotor driveshaft (Para. 10-6.A).

(23) (280F) Install the vertical stabilizer.

(24) If required, install the anti-collision light on top of the tailcone.

(25) Install cowling.

(26) (280FX) Close the drive shaft covers and install the aft cover.

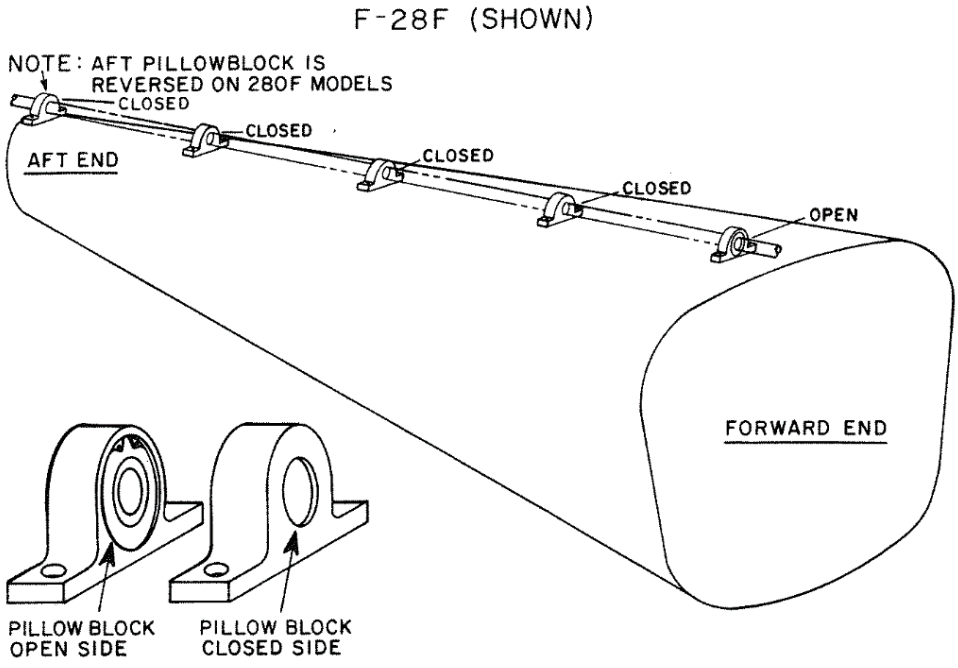

Figure 10-20. Pillow Block Orientation

Visit www.enstromhelicopter.com for instructions to order an original manual and to register for email notification of updates.

10-6.1 TAIL ROTOR DRIVESHAFT FLEX COUPLING

A. General Information – Flex Coupling

The alignment of the tail rotor flex couplings is a very important factor in achieving the full service life of the flex pack. Large offsets on the tension side of the pack usually indicate improper spacing of the coupling sections and will promote premature distortion or degradation of the flex pack. A nominal device life for the flex pack has been established to ensure component integrity. The flex packs must be replaced after 1200 hours of service with new flex packs.

B. Removal – Flex Coupling (Fig. 10-21)

NOTE: Washers (11) are located between the flex coupling washers (16) and the coupling hub flanges (2) and (3) for the purpose of centering and aligning the flex elements (13) between the coupling hub flanges. Note their location before disassembly.

(1) Remove the bolts (10), washers (11) and flex coupling washers (16) which connect the coupling hubs (2) and (3) to the flex elements (3).

(2) Remove the flex elements (13).

(3) Remove the taper pins (5) and (6) and remove the coupling hubs from gearbox and driveshaft.

C. Inspection – Flex Coupling (Figs. 10-22 through 10-25)

NOTE: Fig. 10-22 shows a tail rotor driveshaft coupling installation with the tension and compression sides labeled. There are two types of flex pack distortion which are typically encountered and which are allowable IF THEY ARE WITHIN THE LIMITS listed in this section.

(1) The first type of flex element distortion typically encountered is a simple bow of the elements as shown in Fig. 10-23. This distortion is allowable ONLY as long as the coupling meets the following requirements:

(a) The bend is smooth and gradual, no kinks, etc.

(b) The elements are all deformed evenly, with no separation or voids between the elements.

(c) The bow, as measured in Fig. 10-23, is less than .080 inch deep on the compression side, and less than .060 inch deep on the tension side.

(2) The second type of flex element distortion typically encountered is an offset bend as shown in Fig. 10-24. This type of distortion usually occurs because the coupling halves are not running parallel with each other. This type of distortion is allowable ONLY as long as the flex elements meet the following requirements:

(a) The bend is smooth and fair, with no kinks, etc.

(b) The elements are all deformed evenly, with no separation or voids between the elements.

UNCONTROLLED COPY WHEN DOWNLOADED OR PRINTED

Visit www.enstromhelicopter.com for instructions to order an original manual and to register for email notification of updates.

(c) The offset is less than .060 inch as shown in Fig. 10-24.

(3) The coupling hubs which hold the flex elements must be flat within .010 inch as shown in Fig. 10-25. Any hubs **deformed** beyond this limit MUST be replaced before further flight.

(4) Whether the distortions described in the preceding inspections are present or not, the couplings are UNSERVICEABLE at any time the following conditions exist:

(a) Elements have kinks or sharp bends.

(b) Separations or voids occur between any of the elements.

(c) Non-uniform or non-fair bends.

(d) Cracked or broken elements.

(e) Elongated bolt holes.

(f) Kinks or deformation adjacent to the flex coupling washers.

D. Installation – Flex Coupling (Fig. 10-21)

NOTE: Proper attention during installation and alignment must be taken to permit couplings to operate to full capacity and provide good service life.

(1) Install rain slinger on tail rotor gearbox (Fig. 10-17).

(2) Install coupling hub (3) on gearbox and coupling hub (2) on driveshaft.

NOTE: Taper pins should be seated by tapping into place and then secured with the nut.

(3) Install taper pins (5) and (6), cup washers (7) or washers (8), and nuts (9). Torque nut (25 in-lb/2.8 Nm).

(4) Install a washer (11) on each bolt and insert through the coupling hub (2) or (3).

(5) Install washer(s) (11), flex coupling washers (16), flex pack (13), flex coupling washers (16), washer (11), and nut (12) on each bolt. Torque 70 in-lb/7.9 Nm.

CAUTION: HEAVY OR LIGHT WASHERS (11) CAN BE USED WITH FLEX COUPLING WASHERS TO EQUALLY SPACE FLEX ELEMENTS BETWEEN THE COUPLING HUBS. THE CURVED SIDE OF THE FLEX COUPLING WASHERS MUST FACE AGAINST THE FLEX ELEMENTS.

NOTE: Install the heavy and light washers in the same order and position as previously installed, if applicable.

(6) Place washers (11) on remaining two bolts and insert through the coupling hub (2) or (3), as applicable.

UNCONTROLLED COPY WHEN DOWNLOADED OR PRINTED

Visit www.enstromhelicopter.com for instructions to order an original manual and to register for email notification of updates.

(7) Install washer(s) (11) and flex coupling washers (16) on bolts and insert through the flex pack (13).

(8) Install flex coupling washers (16), washer (11), and nut (12) on each bolt. Torque 70 in-lb/7.9 Nm.

NOTE: With all bolts torqued, the flex elements (13) should be straight and equally spaced between coupling hub flanges.

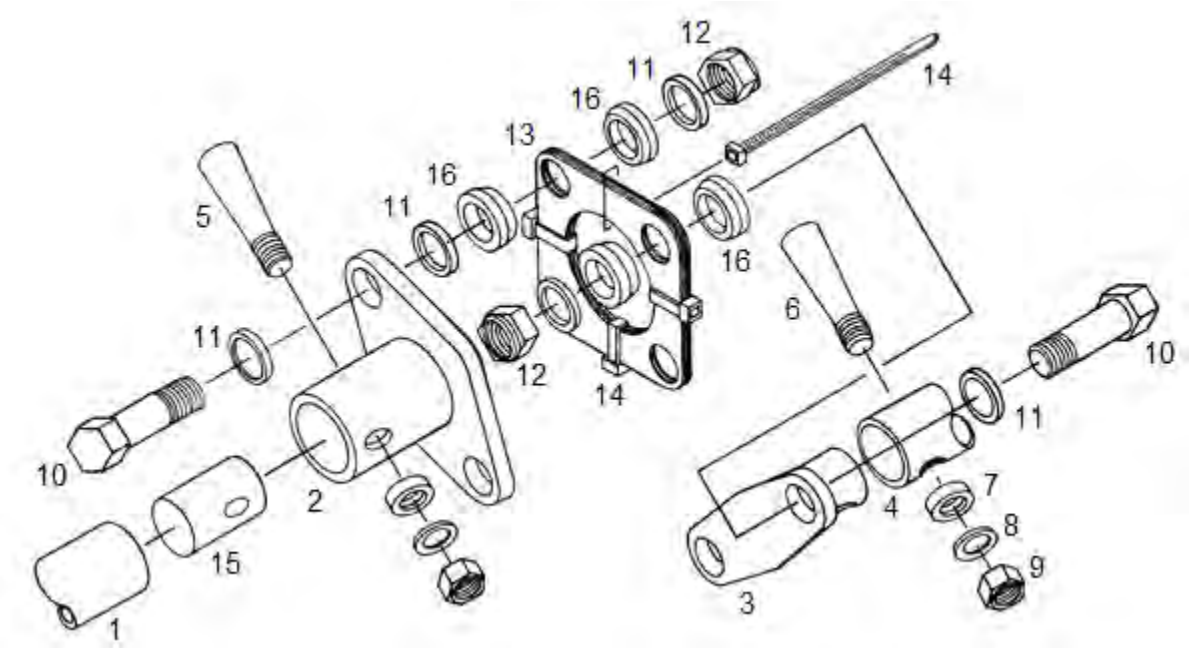

1. Tail Rotor Driveshaft
2. Coupling Hub
3. Coupling Hub
4. Sleeve
5. Taper Pin
6. Taper Pin
7. Cup Washer
8. Washer (If Item 7 is not present)
9. Nut
10. Bolt
11. Washer
12. Nut
13. Flex Pack
14. Cable Tie
15. Plug
16. Flex Coupling Washer (Beveled)

Figure 10-21. Flex Coupling Installation

UNCONTROLLED COPY WHEN DOWNLOADED OR PRINTED

Visit www.enstromhelicopter.com for instructions to order an original manual and to register for email notification of updates.

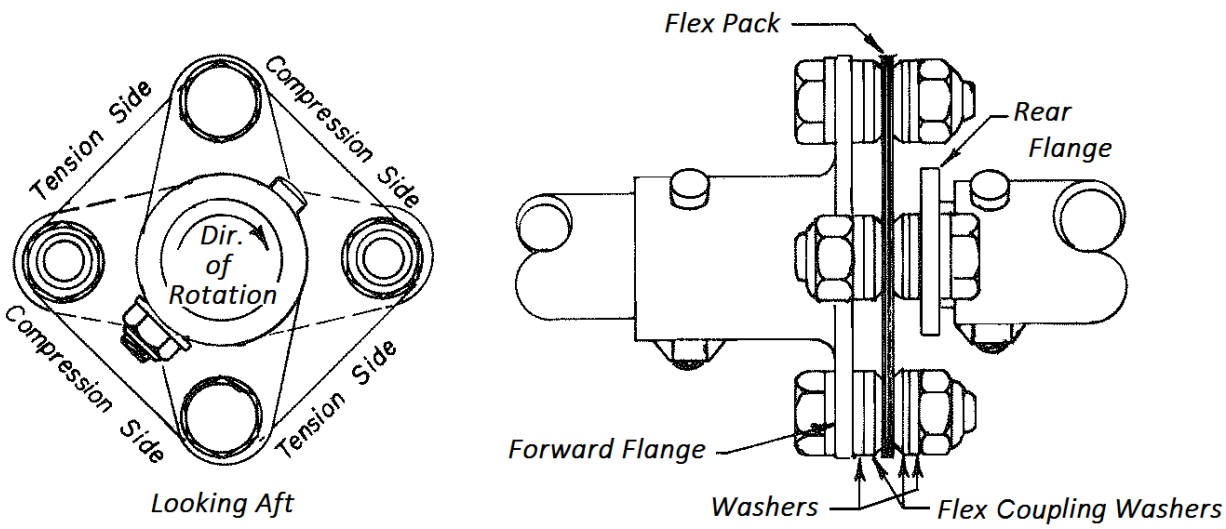

Figure 10-22. Tail Rotor Drive Shaft Coupling Installation, Rear Coupling Shown; Forward Coupling Similar

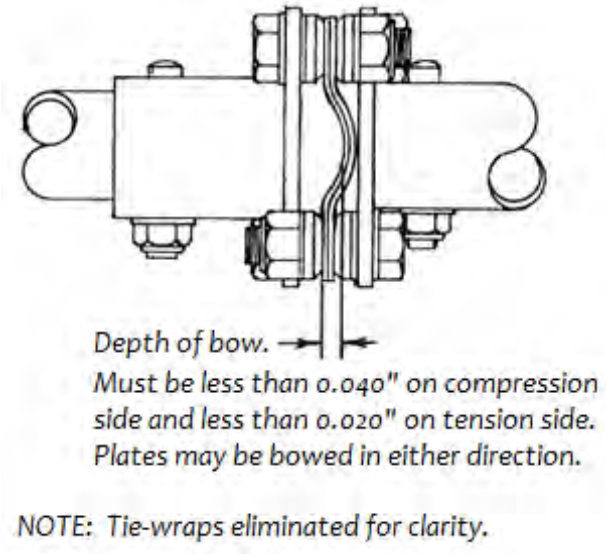

Figure 10-23. Acceptable Limits of Bowed Flex Packs

UNCONTROLLED COPY WHEN DOWNLOADED OR PRINTED

Visit www.enstromhelicopter.com for instructions to order an original manual and to register for email notification of updates.

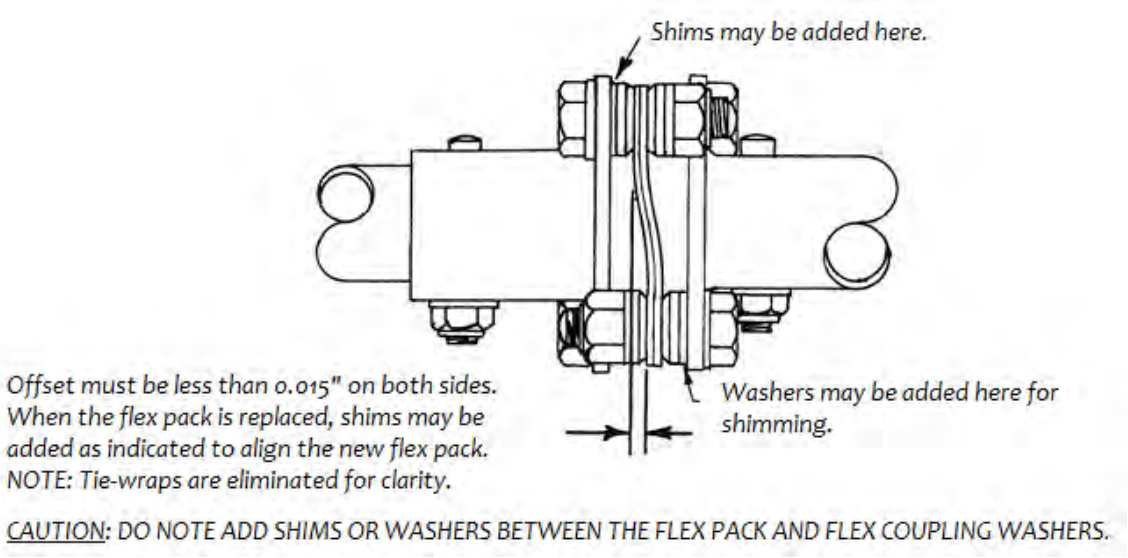

Figure 10-24. Acceptable Limits for Flex Packs with Offset Bends

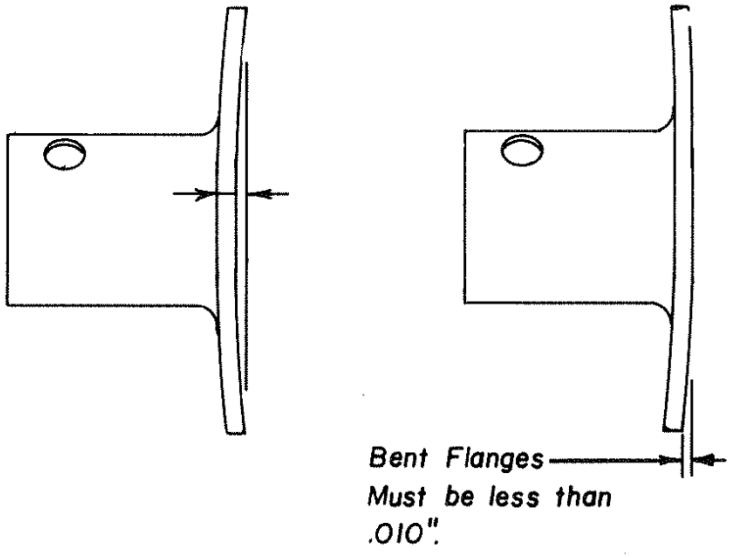

Figure 10-25. Acceptable Limits for Bent Coupling Hub Flanges

UNCONTROLLED COPY WHEN DOWNLOADED OR PRINTED

Visit www.enstromhelicopter.com for instructions to order an original manual and to register for email notification of updates.

10-6.2 TAIL ROTOR DRIVESHAFT PILLOW BLOCK

A. Disassembly – Pillow Block

(1) Remove the rubber insert.

(2) Remove the snap ring.

(3) Heat the housing to approximately 250°F/121°C and gently tap bearing to remove.

B. Inspection – Pillow Block

(1) Bearing condition - no ratchety feeling.

(2) Bearing housing - no cracks, nicks, corrosion.

(3) Rubber insert - no tears or rubber deterioration.

C. Assembly – Pillow Block

(1) Heat bearing housing to approximately 250°F/121°C.

(2) Lubricate the bore of the housing and install the bearing into position.

NOTE: The open side of the bearing is installed inboard toward the grease fitting. On new bearings, one shield must be removed.

(3) Install the snap ring and allow to cool.

(4) Install the rubber insert.

10-6.3 TACH DRIVE PULLEY GUARD

NOTE: The following modifications are optional. Use caution while modifying the pulley guard to avoid damaging the tail rotor driveshaft. Refer to Fig. 10-25.1 for numbered items. Note S/N effectivity

A. Modification – Tach Drive Pulley Guard

NOTE: F-28F, S/N 829 and prior, and 280FX, S/N 2134 and prior, are eligible for the following modification if the pulley guard is original and has not been modified in accordance with SDB 0111. F-28F, S/N 830 and subsequent, and 280FX S/N 2135 and subsequent, are exempt from this modification as these S/N were equipped with the modified pulley guard from the factory.

NOTE: This modification removes material between the clips of the pulley guard to simplify maintenance operations pertaining to the rotor tach assembly or the tail rotor driveshaft and increases the hole diameter to add clearance between the driveshaft and the pulley guard. This modification may be performed with the rotor tach assembly left intact.

NOTE: Refer to Fig. 10-25.1.

UNCONTROLLED COPY WHEN DOWNLOADED OR PRINTED

Visit www.enstromhelicopter.com for instructions to order an original manual and to register for email notification of updates.

(1) Remove pulley guard attachment hardware (2), (3), and (4) and slide guard (1) forward for access. Note the placement and number of washers used for shimming.

(2) Using a suitable metal cutting tool, cut out the area of the pulley guard between the clips.

(3) Remove the pulley guard by slipping it off the driveshaft via the cutout area. Avoid scratching the driveshaft. It will be necessary to twist the guard to provide additional clearance with the driveshaft.

(4) The pulley guard hole may be machined to a maximum 1.125 inch/28.58 mm diameter.

(5) Deburr and apply corrosion protection (epoxy primer) to all newly cut surfaces.

(6) Reinstall the pulley guard.

(7) Check the pulley guard clearance with the driveshaft and the pulley belts. Adjust the number of shimming washers, if necessary.

(8) If there is evidence of contact between the upper cowling and the pulley guard, install a Nitrile rubber pad, or equivalent, on top of the pulley guard to provide surface abrasion protection and vibration dampening properties.

NOTE: Select either a 1/16 inch/1.58 mm or 1/8 inch/3.17 mm to match the gap distance between the pulley guard and the cowling. A one square inch piece will be adequate.

(a) Remove contamination from the pulley guard surface with a clean shop rag wetted with an appropriate solvent.

(b) Install the rubber pad with Loctite 4212 adhesive, or equivalent.

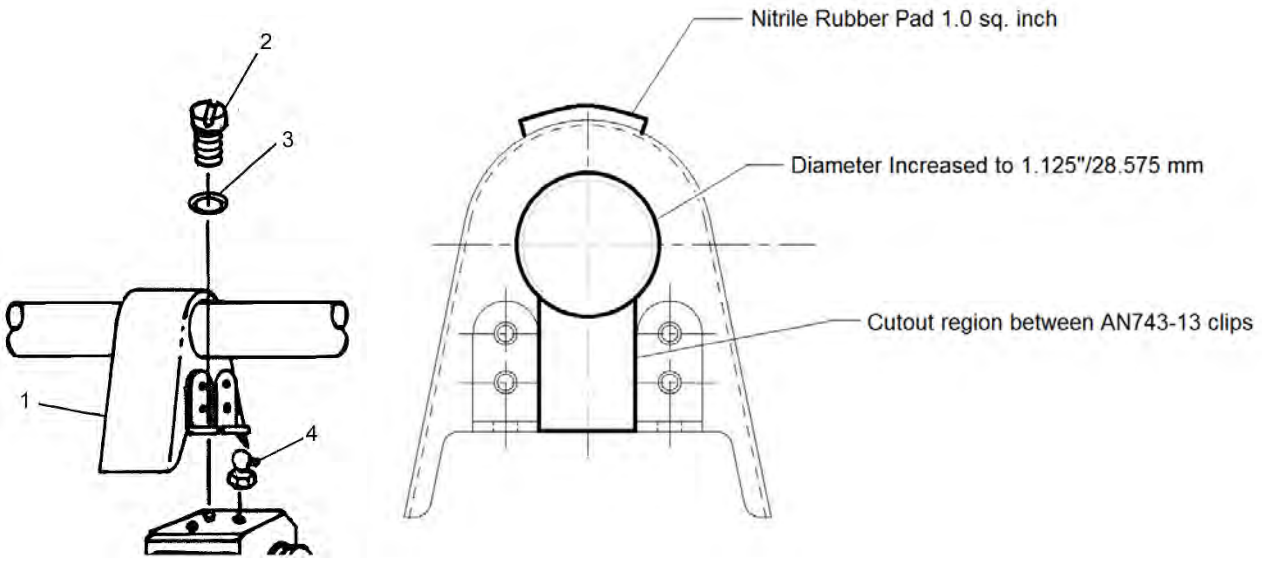

Figure 10-25.1. Tach Drive Pulley Guard Modifications

UNCONTROLLED COPY WHEN DOWNLOADED OR PRINTED

Visit www.enstromhelicopter.com for instructions to order an original manual and to register for email notification of updates.

10-7 TAIL ROTOR CONTROL SYSTEM

A. Tension Check – Tail Rotor Cable Control System

(1) Install the tail rotor rigging tool T-0080 (0.590 in/15 mm side) between the bearing retainer and the output shaft seal retainer to hold the tail rotor pitch controls in the neutral position (Fig. 10-26). Secure the pitch control assembly in this position by installing wooden wedges between the pitch control assembly and the transmission on the right side of the transmission (Fig. 10-27).

(2) Verify that the pilot and co-pilot pedals are in alignment to each other.

(3) If the pedals are not even, adjust the tension as follows:

(a) Remove the wraparound cowl and baggage box, if necessary.

CAUTION: TURNBUCKLES MAY NOT HAVE MORE THAN THREE THREADS SHOWING AT EACH END.

NOTE: Use a cable tensiometer for making cable tension adjustments.

(b) Remove the safety clips or the turnbuckle safety wire. Tighten one turnbuckle and loosen the other to align the pedals and keep the tension at 35-40 lb/5.9-18.1 kg.

(c) Remove the rigging tool T-0080 and wedges from the tail rotor transmission, then cycle the pedals back and forth a few times after each adjustment to equalize the tension between the two cables.

(d) Repeat from step (1) as required.

(4) Check complete rigging of tail rotor (Para. 10-7.B), if adjustments were made.

(5) Install safety clips in the turnbuckles when the cable tension is set.

(6) Install the baggage box and the wraparound cowl.

B. Rigging – Tail Rotor Cable Control System

NOTE: Check three-piece pitch link length at 4.260 in/10.8 cm, if installed.

NOTE: Inspect control cable barrels to ensure locking clips are installed.

(1) Verify the cable tension is set (Para. 10-7.A).

(2) If required, remove the wraparound cowl and baggage box, if necessary.

(3) Remove the seat cushions, seat deck (Para. 8-8.A), and the left floor panel.

(4) Install the tail rotor rigging tool T-0080 (0.590 in/15 mm side) between the bearing retainer and the output shaft seal retainer to hold the tail rotor pitch controls in the neutral position (Fig. 10-26). Secure the pitch control assembly in this position by installing wooden wedges between the pitch control assembly and the transmission on the right side of the transmission (Fig. 10-27).

UNCONTROLLED COPY WHEN DOWNLOADED OR PRINTED

Visit www.enstromhelicopter.com for instructions to order an original manual and to register for email notification of updates.

(5) Verify that the pedals are in alignment. If not aligned, adjust the cable tension in accordance with Para. 10-7.A.

(6) Remove the rigging tool T-0080 and wedges from the tail rotor transmission, then cycle the pedals and look for interference between the pitch control assembly pivot brackets and the tail rotor transmission.

(7) Move the pedals to the full left position. Insert the tail rotor rigging tool T-0080 (narrow profile) between the output shaft seal housing and the face of the brass bushing in the pitch control assembly (Fig. 10-26). The rigging tool should just fit in when the pedals contact the left stop. Adjust the “left pedal adjustment stop” until the pedal and the control assembly make contact at the same time (Fig. 10-28).

(8) Move the control pedals to the full right position. Insert the tail rotor rigging tool T-0080 (widest profile) between the output shaft seal housing and the face of the brass bushing in the pitch control assembly (Fig. 10-26). The rigging tool should just fit in when the pedals contact the right stop. Adjust the “right pedal adjustment stop” until the pedal and the control assembly make contact at the same time (Fig. 10-28).

NOTE: Control brackets should not stop against tail rotor gearbox. Pedals must stop against stop bolts on forward bellcrank.

(9) Install the wraparound cowl and the baggage box, if removed.

(10) Install the left floor panel, seat deck (Para. 8-8.D), and seat cushions.

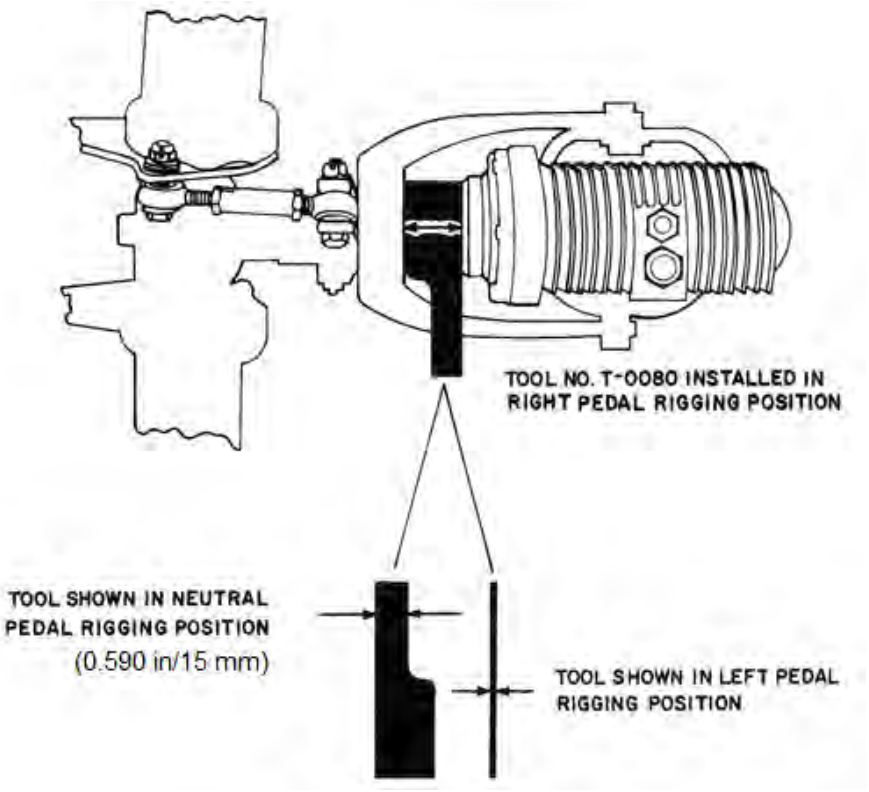

Figure 10-26. Rigging Tool T-0080 Installation

UNCONTROLLED COPY WHEN DOWNLOADED OR PRINTED

Visit www.enstromhelicopter.com for instructions to order an original manual and to register for email notification of updates.

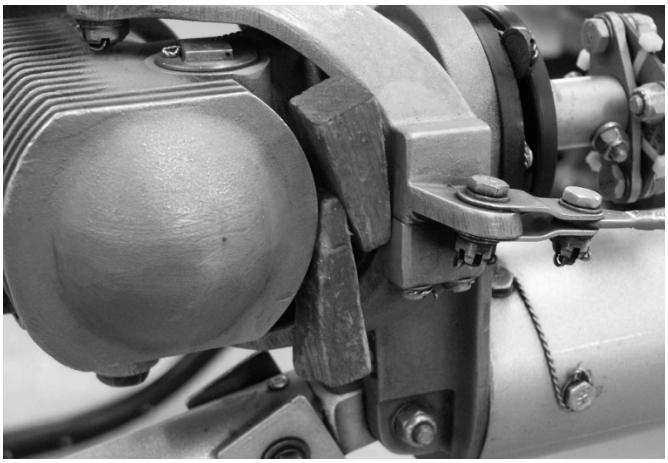

Figure 10-27. Wooden Wedges Installed

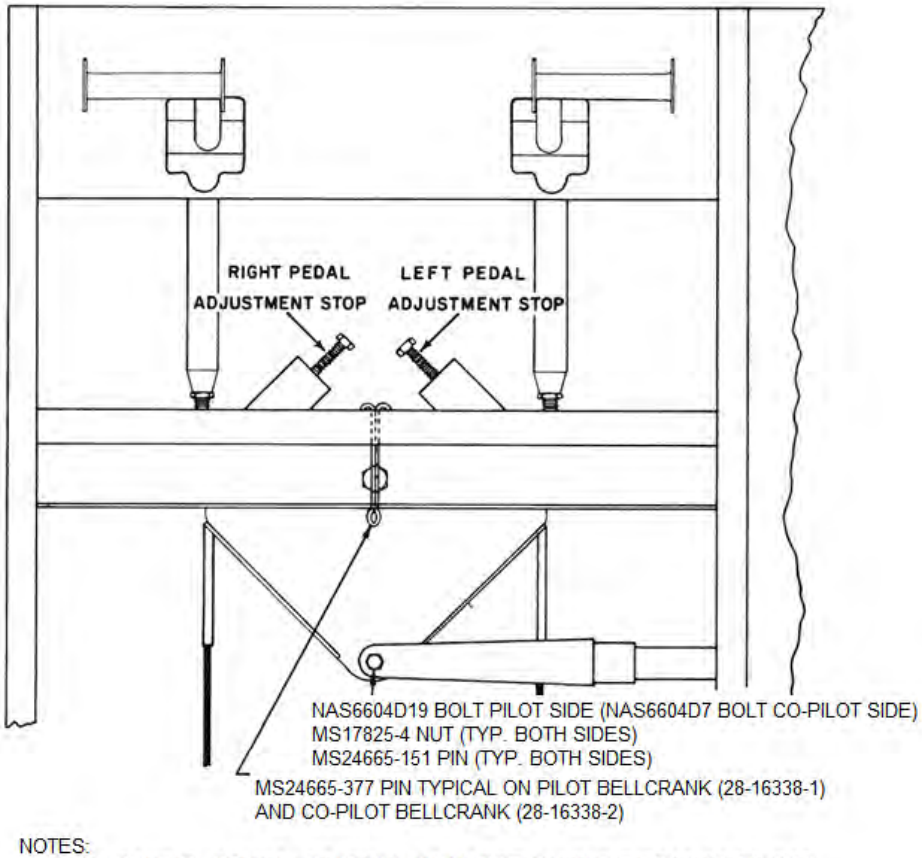

NOTES:
1. AT ALL DOUBLE LOCKING LOCATIONS, NO MORE THAN ONE THREAD OF BOLT TO BE BELOW SURFACE OF JOINT.
2. UP TO 3 WASHERS TOTAL MAY BE USED UNDER BOLT HEAD AND NUT TO ENSURE PROPER ENGAGEMENT OF COTTER PIN IN NUT CASTELLATION.
3. BOLTS OF NEXT DASH NO. IN LENGTH MAY BE SUBSTITUTED AS LONG AS REQUIREMENTS OF NOTE 2 ARE MET.
4. ALL CHECK NUTS TO BE TREATED WITH VIBRA-TITE (VC-3).
5. BELLCRANK HARDWARE TYPICAL 2 PLACES.

Figure 10-28. Tail Rotor Pedal Adjustment Stops

UNCONTROLLED COPY WHEN DOWNLOADED OR PRINTED

Visit www.enstromhelicopter.com for instructions to order an original manual and to register for email notification of updates.

10-8 TAIL ROTOR CONTROL CABLES

A. Inspection – Tail Rotor Cable

(1) Remove the wraparound cowling and baggage box, if required.

(2) Remove the seat cushions, seat deck, and the floor panels on the left side of the cabin.

NOTE: Stabilizer removal is not required on 280F models.

(3) Remove the left side horizontal stabilizer and remove the inspection panel on the tailcone.

(4) Inspect the cables and cable ends for corrosion, wear, broken strands or strand separations, and fraying.

CAUTION: USE OF PVC TAPE TO COVER OR WRAP THE EXPOSED CABLE ENDS IS PROHIBITED. REMOVE ANY PVC TAPE FROM THE CABLES IF PRESENT.

(5) Visually inspect the cable pulleys for wear and security.

a) Disconnect the tail rotor cables from the tail rotor pitch change assembly and attach strings to the end of the cables.

b) Partially pull the tail rotor control cables out of the tailcone through the access opening and inspect the areas of the tail rotor control cables that pass over the pulleys and inspect the pulleys in accordance with FAA Advisory Circular 43.13-1B, Para. 7-149, Cable System Inspection. If the pulleys are rubbing on the mounting brackets, AN960-10L, NAS1149F0316P, or NAS1149F0332P washers may be used as shims to eliminate the interference.

CAUTION: IN OLDER AIRCRAFT, TURNBUCKLES LOCATED NEAR THE TURBOCHARGER HAVE A HIGH SUSCEPTIBILITY TO RAPID DETERIORATION. IT IS RECOMMENDED THAT THE LOCATION OF THE TURNBUCKLES BE REPOSITIONED UNDER THE BAGGAGE BOX. SEE SIL 0192 FOR PART NUMBER INFORMATION.

(6) Inspect the turnbuckles hardware for corrosion and security.

(7) Replace and reinstall the tail rotor cables and/or pulleys if an unsatisfactory condition, as described in steps 4 through 6, is evident.

(8) Check cable tension 35-40 lb/15.9-18.1 kg with cable tensiometer and tail rotor rigging (Para. 10-7.A).

(9) Install the left side horizontal stabilizer, if removed, and install the inspection panel on the tailcone.

(10) Install the left side floor panel, seat deck, and seat cushions.

(11) Install wraparound cowling and the baggage box, if removed.

UNCONTROLLED COPY WHEN DOWNLOADED OR PRINTED

Visit www.enstromhelicopter.com for instructions to order an original manual and to register for email notification of updates.

B. Replacement – Tail Rotor Cable (Fig. 10-29)

(1) Replace the aft section of the tail rotor cable as follows:

(a) Remove the wraparound cowl and the baggage box, if required.

NOTE: Stabilizer removal is not required on 280F models.

(b) If required, remove the left side horizontal stabilizer and remove the inspection panel on the tailcone.

(c) Remove the cotter pins from the aft cable guide pulley.

(d) Remove pivot hardware from the cable links at the aft control brackets (Detail A).

(e) Cut the tail rotor cable aft of the turnbuckle in the engine compartment or aft pylon area, as applicable.

(f) Attach a string to the forward end of the cable and pull the cable out through the aft end of tailcone.

NOTE: String will follow routing through pulleys and eyelets to aid in installation of the new cable.

(g) Attach a new tail rotor cable to the string and pull it back through the tailcone eyelets and cable pulleys.

NOTE: Check that the cable is properly routed and riding on the pulleys (Detail C and Detail D).

(h) Clamp the tail rotor pedals in neutral position using two wood blocks and C-clamps.

(i) Install the tail rotor rigging tool T-0080 (0.590 in/15 mm) between the bearing retainer and the output shaft seal retainer to hold the tail rotor pitch controls in the neutral position (Fig. 10-26). Secure the pitch control assembly in this position by installing wooden wedges between the pitch control assembly and the transmission on the right side of the transmission (Fig. 10-27).

NOTE: If rigging tool is not available, install a spacer measuring 0.590 in/15 mm between the brass bushing and the seal housing.

(j) Connect the aft end of tail rotor cable to the cable links and the tail rotor control brackets. Torque the pivot bolts and install cotter pins.

CAUTION: CABLE LINKS MUST PIVOT FREELY ON THE CONTROL BRACKETS AND AT THE CABLE CONNECTIONS.

(k) Adjust the turnbuckle so only one thread of rod ends is showing at each end of turnbuckle.

(l) Position the new cable through the cable eye on the turnbuckle rod end.

UNCONTROLLED COPY WHEN DOWNLOADED OR PRINTED

Visit www.enstromhelicopter.com for instructions to order an original manual and to register for email notification of updates.

(m) Pull the cable taut and swedge in this position. Allow 2 to 3 inches of cable extending from swedge and cut excess cable to leave approximately a 1 inch tail.

CAUTION: TURNBUCKLES MAY NOT HAVE MORE THAN THREE THREADS SHOWING AT EACH END.

(n) Using a cable tensiometer, adjust the turnbuckles until the cables read 35-40 lb/15.9-18.1 kg.

(o) Remove the clamps from the tail rotor pedals.

(p) Check the rigging and cable tension (Para. 10-7.A).

(q) Cycle tail rotor pedals to check for binding.

(r) Install pulley cotter pins and check pulley for binding.

(s) Install the inspection panel on the tailcone.

(t) Install the horizontal stabilizer, if removed.

(u) Install wraparound cowling and the baggage box, if removed.

(2) Replace the forward section of the tail rotor cable as follows (Fig. 10-29):

(a) Remove the seat cushions and the seat deck (Para. 8-8.A).

(b) Remove the floor panels on the left side of the cabin.

(c) Disconnect the cable from the forward tail rotor pedal bellcrank (Detail F).

(d) Cut the cable forward of the turnbuckle in the engine compartment or aft pylon area, as applicable (Detail B).

NOTE: It is not necessary to remove the pulley cotter pins.

(e) Attach a string to the aft end of the cable and pull it out forward through the firewall and the seat assembly.

(f) Attach a new cable to the string and pull it back through the firewall.

NOTE: Check that cable is properly routed and riding on pulley on forward side of firewall (Detail E).

(g) Install spacers on each side of the cable and insert into the forward bellcrank. Secure with hardware (Detail F).

(h) Clamp the tail rotor pedals in neutral position using two wood blocks and C-clamps.

UNCONTROLLED COPY WHEN DOWNLOADED OR PRINTED

Visit www.enstromhelicopter.com for instructions to order an original manual and to register for email notification of updates.

(i) Install the tail rotor rigging tool T-0080 (0.590 in/15 mm) between the bearing retainer and the output shaft seal retainer to hold the tail rotor pitch controls in the neutral position (Fig. 10-26). Secure the pitch control assembly in this position by installing wooden wedges between the pitch control assembly and the transmission on the right side of the transmission (Fig. 10-27).

NOTE: If a rigging tool is not available, install a spacer measuring 0.590 in/15 mm between the brass bushing and the seal housing.

(j) Adjust the turnbuckle in the engine compartment or aft pylon area, as applicable, so only one thread of the rod ends is showing at each end of the turnbuckle.

(k) Position the new cable through the cable eye on the turnbuckle rod end.

(l) Pull the cable taut and swedge in this position. Allow 2 to 3 inches of cable extending from swedge and cut excess cable to leave approximately a 1 inch tail.

CAUTION: TURNBUCKLES MAY NOT HAVE MORE THAN THREE THREADS SHOWING AT EACH END.

(n) Using a cable tensiometer, adjust the turnbuckles until the cables read 35-40 lb/15.9-18.1 kg.

(o) Remove the clamps from the tail rotor pedals.

(p) Check the rigging and cable tension (Para. 10-7.A).

(q) Cycle tail rotor pedals to check for binding.

(r) If previously removed, install cotter pins and check pulley for binding.

(s) Install the floor panel, seat deck (Para. 8-8.D), and cushions.

UNCONTROLLED COPY WHEN DOWNLOADED OR PRINTED

Visit www.enstromhelicopter.com for instructions to order an original manual and to register for email notification of updates.

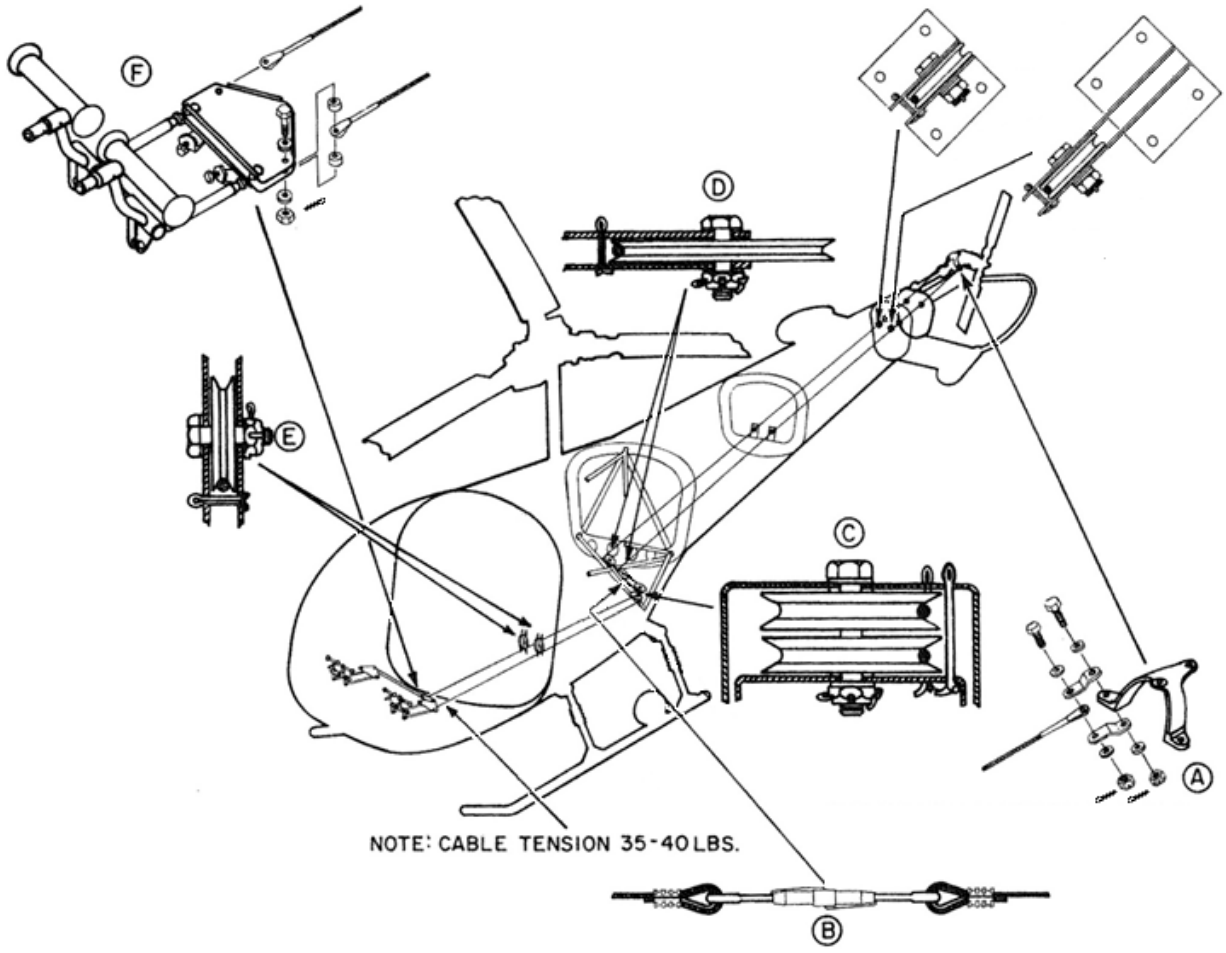

Figure 10-29. Tail Rotor Cables

UNCONTROLLED COPY WHEN DOWNLOADED OR PRINTED

Visit www.enstromhelicopter.com for instructions to order an original manual and to register for email notification of updates.

SECTION 11

BELT DRIVE SYSTEM

TABLE OF CONTENTS

Paragraph		Page
	General Information	MM-11-3
11-1	**Clutch Control and Belt Tension Rigging**	**MM-11-3**
	A. Static Inspection	MM-11-3
	B. Rigging Procedures	MM-11-5
11-2	**Clutch Cable**	**MM-11-10**
	A. Removal	MM-11-10
	B. Installation	MM-11-11
11-3	**Clutch Control Lever**	**MM-11-13**
	A. Removal	MM-11-13
	B. Inspection	MM-11-13
	C. Installation	MM-11-13
11-4	**Jackstrut and Pulley Assembly**	**MM-11-14**
	A. Removal	MM-11-14
	B. Disassembly	MM-11-14
	C. Cleaning	MM-11-15
	D. Inspection	MM-11-15
	E. Assembly	MM-11-15
	F. Installation	MM-11-16
	G. Pulley Alignment Procedure	MM-11-17
11-5	**Drive Belt**	**MM-11-21**
	A. Troubleshooting	MM-11-21
	B. Tracking	MM-11-21
	C. Removal	MM-11-24
	D. Inspection	MM-11-24
	D.1. Repair	MM-11-27
	E. Installation	MM-11-33
11-6	**Main Rotor Transmission**	**MM-11-36**
	A. General Description	MM-11-36
	B. Removal	MM-11-36
	C. Seal Replacement	MM-11-37
	D. Installation	MM-11-39
11-6.1	**Main Rotor Chip Detector**	**MM-11-41**
	A. Removal	MM-11-41
	B. Installation	MM-11-41
11-7	**Overrunning Clutch and Pulley Assembly**	**MM-11-42**
	A. Troubleshooting	MM-11-42
	B. Servicing and Inspection	MM-11-42
	C. Removal	MM-11-43
	D. Disassembly	MM-11-44
	E. Cleaning	MM-11-44
	F. Inspection	MM-11-44
	G. Assembly	MM-11-44
	H. Installation	MM-11-45

UNCONTROLLED COPY WHEN DOWNLOADED OR PRINTED

Visit www.enstromhelicopter.com for instructions to order an original manual and to register for email notification of updates.

SECTION 11

BELT DRIVE SYSTEM

TABLE OF CONTENTS – CONTINUED (PAGE MM-11-2)

Paragraph			Page
11-7.1	**Upper Jackstrut Bearing**		**MM-11-47**
	A.	Removal	MM-11-47
	B.	Cleaning	MM-11-47
	C.	Inspection	MM-11-47
	D.	Installation	MM-11-47
11-8	**Idler Pulley Assembly**		**MM-11-53**
	A.	Troubleshooting	MM-11-53
	B.	Removal	MM-11-53
	C.	Disassembly	MM-11-53
	D.	Cleaning	MM-11-54
	E.	Inspection	MM-11-54
	F.	Assembly	MM-11-54
	G.	Installation	MM-11-55
11-8.1	**Yoke End Assembly**		**MM-11-56**
	A.	Removal	MM-11-56
	B.	Disassembly	MM-11-56
	C.	Inspection	MM-11-56
	D.	Assembly	MM-11-56
	E.	Installation	MM-11-57
11-8.2	**Actuator Arm Assembly and Snubber Roller Assembly**		**MM-11-58**
	A.	Removal	MM-11-58
	B.	Disassembly	MM-11-58
	C.	Cleaning	MM-11-58
	D.	Inspection	MM-11-58
	E.	Assembly	MM-11-59
	F.	Installation	MM-11-59
11-9	**Belt Tension Assembly**		**MM-11-71**
	A.	Troubleshooting	MM-11-71
	B.	Removal	MM-11-71
	C.	Disassembly	MM-11-71
	D.	Cleaning	MM-11-72
	E.	Inspection	MM-11-72
	F.	Repair	MM-11-72
	G.	Assembly	MM-11-72
	H.	Installation	MM-11-74
	I.	Replacement – Spring Capsule Bushing	MM-11-74
	J.	Assembly – Spring Capsule	MM-11-76

UNCONTROLLED COPY WHEN DOWNLOADED OR PRINTED

Visit www.enstromhelicopter.com for instructions to order an original manual and to register for email notification of updates.

SECTION 11

BELT DRIVE SYSTEM

General Information

The belt drive system consists of a jackstrut and pulley assembly, idler pulley assembly, belt tension assembly, and a clutch engagement lever which is controlled from the cabin. The jackstrut pulley, which is bolted to the engine, drives the main rotor gearbox through a main drive belt. By engaging the clutch lever, the belt tension assembly pulls the idler pulley into the drive belt. Belt tension is maintained by properly rigging the system. Correct rigging and maintenance are very important to keep this system working properly and extends component service life.

11-1 CLUTCH CONTROL AND BELT TENSION RIGGING

NOTE: The clutch control and belt tension rigging static inspection assists in determining if the drive belt tension, belt tension mechanism, actuator, and clutch control handle are rigged properly and in the proper operating position.

NOTE: Inspection is to be completed in the sequence listed and with the engine off.

WARNING: EXTREME CAUTION SHOULD BE USED WHEN BELT TENSION MECHANISM IS IN ENGAGED POSITION. KEEP HANDS AWAY FROM THIS MECHANISM WHEN ENGAGING OR DISENGAGING CLUTCH, OR PERSONAL INJURY COULD OCCUR.

A. Static Inspection

(1) Pull clutch handle up a couple inches and SLOWLY return lever to CLUTCH DISENGAGED position (Fig. 11-1, Detail d).

NOTE: The clutch lever must be placed in the disengaged position gently (and the guide bushings must be snug enough) so that momentum will not continue movement of the bellcrank and give a false indication of the 1/16 to 1/8 inch/1.6-3.3 mm gap.

(a) The threaded shaft (6) should be within 1/16 to 1/8 inch/1.6-3.3 mm of the lower pivot spacer of bellcrank (2) (Fig. 11-2, Detail a).

1 If measurement is outside the limits, adjust spring capsule clearance (Para. 11-1.B.(4)).

(b) Verify guide bushings (8) (Fig. 11-18) are snug on bracket (9) (Fig. 11-3, Detail c).

1 If the guide bushings are not snug on the brackets, adjust clutch capsule slide connection (Para. 11-1.B.(3)).

(2) ENGAGE clutch and STOW clutch lever (Fig. 11-1, Detail a).

(a) The clutch lever should lie flat on the floor (Fig. 11-1, Detail a). Movement of the handle should have no effect on the bellcrank (Fig. 11-1, Detail f).

UNCONTROLLED COPY WHEN DOWNLOADED OR PRINTED

Visit www.enstromhelicopter.com for instructions to order an original manual and to register for email notification of updates.

(b) Use the shank of a 1/8 drill bit or a #30 drill bit to verify that there is approximately .125-inch (3.2 mm) space between the clutch lever and the spacer in the bellcrank (Fig. 11-1, Detail e).

1 If the clearance between the handle and the spacer is not correct the clutch system will require rigging (Para. 11-1.B).

(c) Viewing the belt tension mechanism, check that the overcenter stop (8) is tightly against side plates (9) (Fig. 11-3, Detail b), and the clutch engage warning light is out.

(d) Viewing the top of the spring capsule, inspect for wear (Fig. 11-3.1) between the adapter (3) and the bushing (5) (Fig. 11-19). It may help to push the top of the capsule inboard while watching for movement between the adapter and the bushing.

1 If bushing is loose, replace the bushing (Para. 11-9.I).

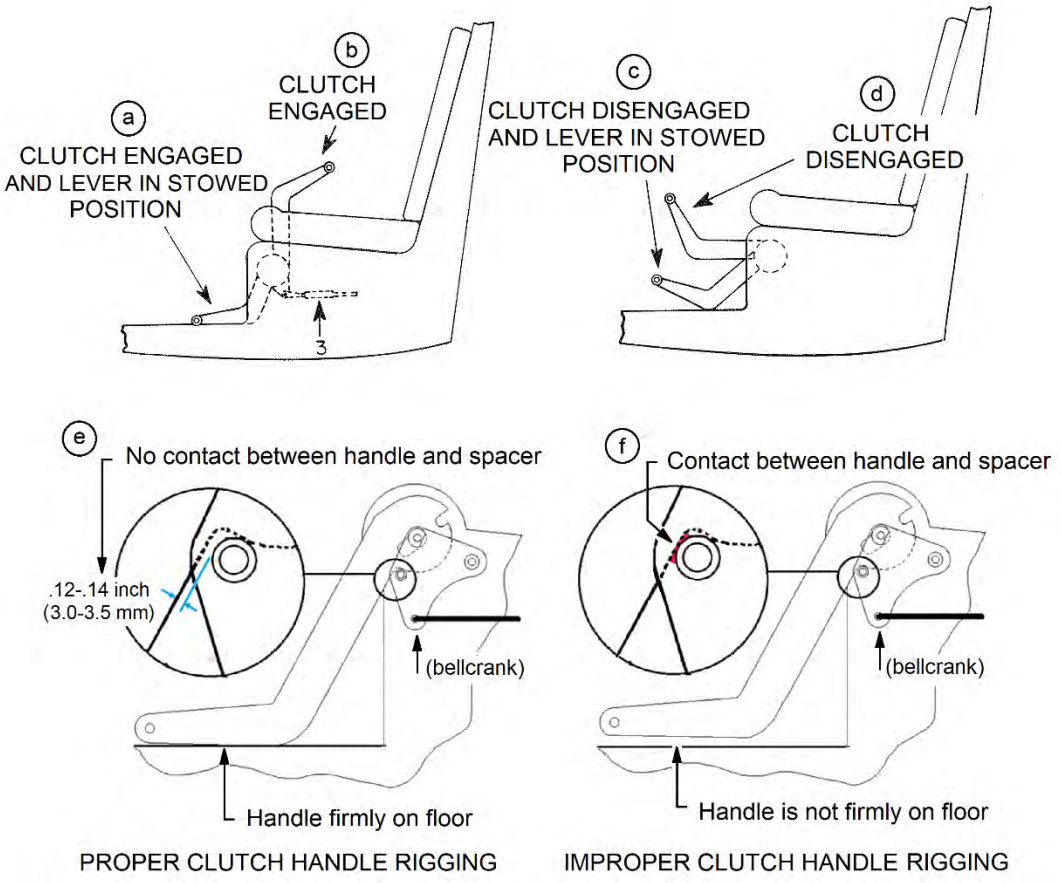

Figure 11-1. Clutch Rigging

UNCONTROLLED COPY WHEN DOWNLOADED OR PRINTED

Visit www.enstromhelicopter.com for instructions to order an original manual and to register for email notification of updates.

(e) View spring capsule adapter (6) (Fig. 11-3).

1 The proper extension of adapter (6) is 1-5/8 to 1-3/4 inches/41.3-44.5 mm from top of spring capsule to bottom of adapter nut (Fig. 11-3, Detail d).

a If the adapter extension is not correct, adjust the extension (Para. 11-1.B.(5)).

NOTE: Adjusting the adapter extension will require rigging the adapter extension and the snubber roller adjustments.

NOTE: Rigging between clutch control handle and the belt tension mechanism will usually remain constant unless some portion of this system is removed or replaced.

2 The bellcrank should be horizontal to slightly below horizontal (Fig. 11-3, Detail e).

(f) Inspect for contact between the anchor (14) (Fig. 11-19) and the pylon tube.

1 If contact is evident, chamfer the anchor (Para. 11-9.F).

(g) Check clearance between the snubber roller and the back side of the belt for 0.38 inch/9.5 mm gap and parallelism to the belt.

1 If clearance is insufficient, adjust roller (Para. 11-5.B.(11)).

2 Inspect the snubber roller for wear (grooves). Wear of the snubber roller from the belt indicates contact from the belt during operation and that the gap between the belt and the roller is not sufficient.

B. Rigging Procedures

WARNING: EXTREME CAUTION SHOULD BE USED WHEN BELT TENSION MECHANISM IS IN ENGAGED POSITION. KEEP HANDS AWAY FROM THIS MECHANISM WHEN ENGAGING OR DISENGAGING CLUTCH, OR PERSONAL INJURY COULD OCCUR.

NOTE: Para. 11-1.B.(5), Belt Tension Adjustment, will have to be re-checked after belt replacement or drive system disassembly to assure proper belt tension and rigging.

NOTE: The clutch is rigged in the following steps. Rigging is to be completed in the sequence listed, with the engine off.

(1) Preliminary Clutch Lever Adjustment

NOTE: The clutch lever must be placed in the disengaged position gently (and the guide bushings must be snug enough) so that momentum will not continue movement of the bellcrank and give a false indication of the 1/16 to 1/8 inch/1.6-3.3 mm gap.

(a) Place clutch in ENGAGED position (Fig. 11-1, Detail b). With clutch engaged, lift and release clutch lever to stowed position (Fig. 11-1, Detail a). Adjust turnbuckle (3) until the clutch lever will lie flat on floor and that there is approximately 0.125 inch/3.2 mm clearance between the handle and the spacer (Fig. 11-1, Detail e).

UNCONTROLLED COPY WHEN DOWNLOADED OR PRINTED

Visit www.enstromhelicopter.com for instructions to order an original manual and to register for email notification of updates.

(2) Preliminary Belt Tension Mechanism Check

(a) Check the following items before proceeding with clutch rigging.

1 Clutch cable is to have one thread exposed above jam nut (11) (Fig. 11-3).

2 Engage the clutch lever (Fig. 11-1, Detail b) and check that belt tension assembly is locked over center with stops (8) contacting side plates (9), and the clutch engage warning light is out (Fig. 11-3, Detail b).

3 Disengage the clutch (Fig. 11-1, Detail d).

(3) Spring Capsule Slide Connection Adjustment

1 With the clutch disengaged, remove the bolt (18) securing the clutch cable (15) to the clutch actuator bellcrank (13) (Fig. 11-3).

2 Pull clutch handle up 2 inches/50 mm to move the cable out of the way at the clutch capsule.

3 Loosen the torque on nuts (7) that secure the capsule assembly (6) into the guide brackets (9) so that the nylon guides (8) are loose (Fig. 11-18).

4 Connect a fish scale to the clutch capsule bellcrank assembly and measure the force required to start the bellcrank moving (Fig. 11-2, Detail b).

5 Incrementally re-tighten the nuts securing the capsule to the brackets until the force required to move the bellcrank is the original scale reading plus 3 lb/1.4 kg.

6 Connect the clutch cable rod end (10) to the bellcrank (13) and torque nut to 30-40 in-lb/3.4-4.5 Nm (Fig. 11-3, Detail a).

(4) Spring Capsule Clearance Adjustment

NOTE: Adjust spring capsule clearance with clutch disengaged.

(a) Loosen jam nut (5) (Fig. 11-2) and turn spring capsule adapter (4) in or out of spring capsule to obtain 1/16 to 1/8 inch/1.6-3.3 mm clearance between threaded shaft and lower pivot spacer of bellcrank (2) (Fig. 11-2, Detail a).

NOTE: After each adjustment of the adapter, the clutch handle must be pulled up a few inches and SLOWLY returned to the full down position.

(b) Re-check clearance after engaging and disengaging clutch.

(c) Lock jam nut (5) against adapter (4).

(5) Belt Tension Adjustment

(a) ENGAGE the clutch assembly.

(b) Measure the exposed surface of the adapter (6) (Fig. 11-3, Detail d).

NOTE: Ensure measurement is taken from the bottom of the adapter nut (4), NOT the jam nut (5) on top of adapter nut (4) (Fig. 11-3, Detail d).

UNCONTROLLED COPY WHEN DOWNLOADED OR PRINTED

Visit www.enstromhelicopter.com for instructions to order an original manual and to register for email notification of updates.

(c) The length of exposed spring capsule adapter (6) should be 1-5/8 to 1-3/4 inches/41.3-44.5 mm. If length is not correct, proceed as follows:

1 Loosen jam nut (5).

2 DISENGAGE clutch assembly.

3 Disconnect rod end (1) from bellcrank (2).

4 Adjust shaft (3) in or out of yoke (4). Each turn of shaft (3) will change the exposed section of the adapter (6) by approximately 0.1 inch/2.4 mm.

5 Connect rod end (1) to bellcrank (2) and ENGAGE clutch to recheck adjustment of adapter (6).

6 Continue the adjustment process until the exposed surface of the adapter (6) is 1-5/8 to 1-3/4 inches/41.3-44.5 mm.

(d) Continue to check the following with clutch assembly ENGAGED:

1 The top edge of bellcrank (2) should be horizontal to slightly below horizontal (i.e., parallel) to the lower aft pylon cross tube (Fig. 11-3, Detail e).

2 The snubber roller should be parallel to the back side of the belt with 0.38 inch/9.5 mm clearance.

NOTE: After final adjustment of the idler pulley track, loosen the aft nut on the "snubber" roller and allow the roller to self-align on the idler straps. Torque the aft nut to 95-110 in-lb/10.8-12.5 Nm.

(e) Secure rod end (1) to bellcrank (2). Torque nut (30-40 in-lb/3.4-4.5 Nm).

(f) Secure yoke jam nut (5) against yoke (4) (40-45 ft-lb/4.5-5.1 Nm).

(g) Apply Vibra-Tite VC-3 to the following:

1 Spring capsule adapter (6) jam nuts.

2 Yoke jam nut (5).

3 Clutch cable rod end jam nut (12).

(6) Final Clutch Lever Adjustment Check

(a) With the clutch engaged and clutch lever in stowed position, the clutch lever should lie flat on the floor (Fig. 11-1, Detail a). Movement of the handle should have no effect on the bellcrank (Fig. 11-1, Detail e and Detail f).

(b) Use the shank of a 1/8 drill bit or a #30 drill bit to verify that there is approximately 0.125-inch (3.2 mm) space between the clutch lever and the spacer in the bellcrank (Fig. 11-1, Detail e).

(c) Check that the nuts on the turnbuckles and all other check nuts in the system are torqued.

(d) Check that the clutch is over center with the stops contacting the side plates and that the clutch light is out.

UNCONTROLLED COPY WHEN DOWNLOADED OR PRINTED

Visit www.enstromhelicopter.com for instructions to order an original manual and to register for email notification of updates.

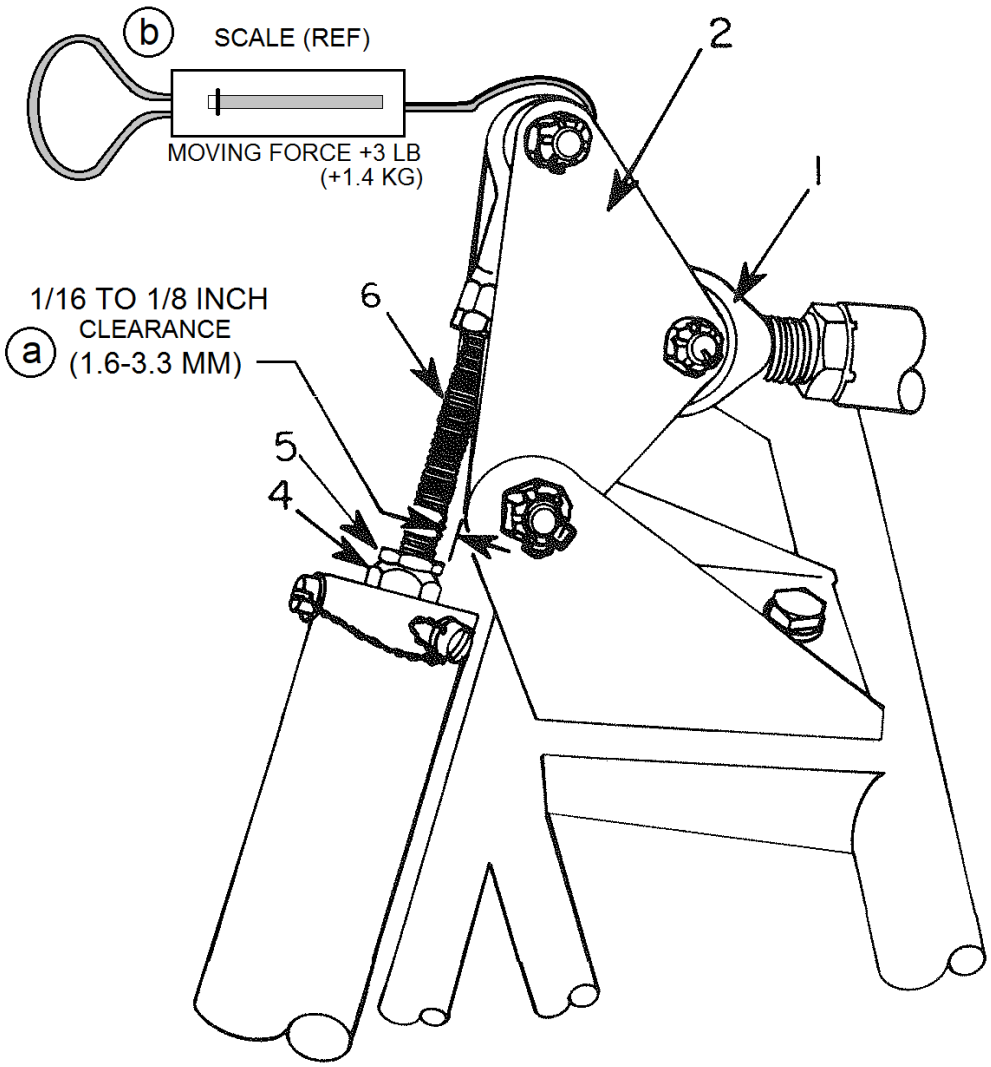

(Clutch Disengaged)

1. Rod End
2. Bellcrank
3. Turnbuckle (Fig. 11-1)
4. Spring Capsule Adapter
5. Jam Nut (2 places)
6. Shaft

Figure 11-2. Clutch Rigging – Spring Capsule Adjustments

UNCONTROLLED COPY WHEN DOWNLOADED OR PRINTED

Visit www.enstromhelicopter.com for instructions to order an original manual and to register for email notification of updates.

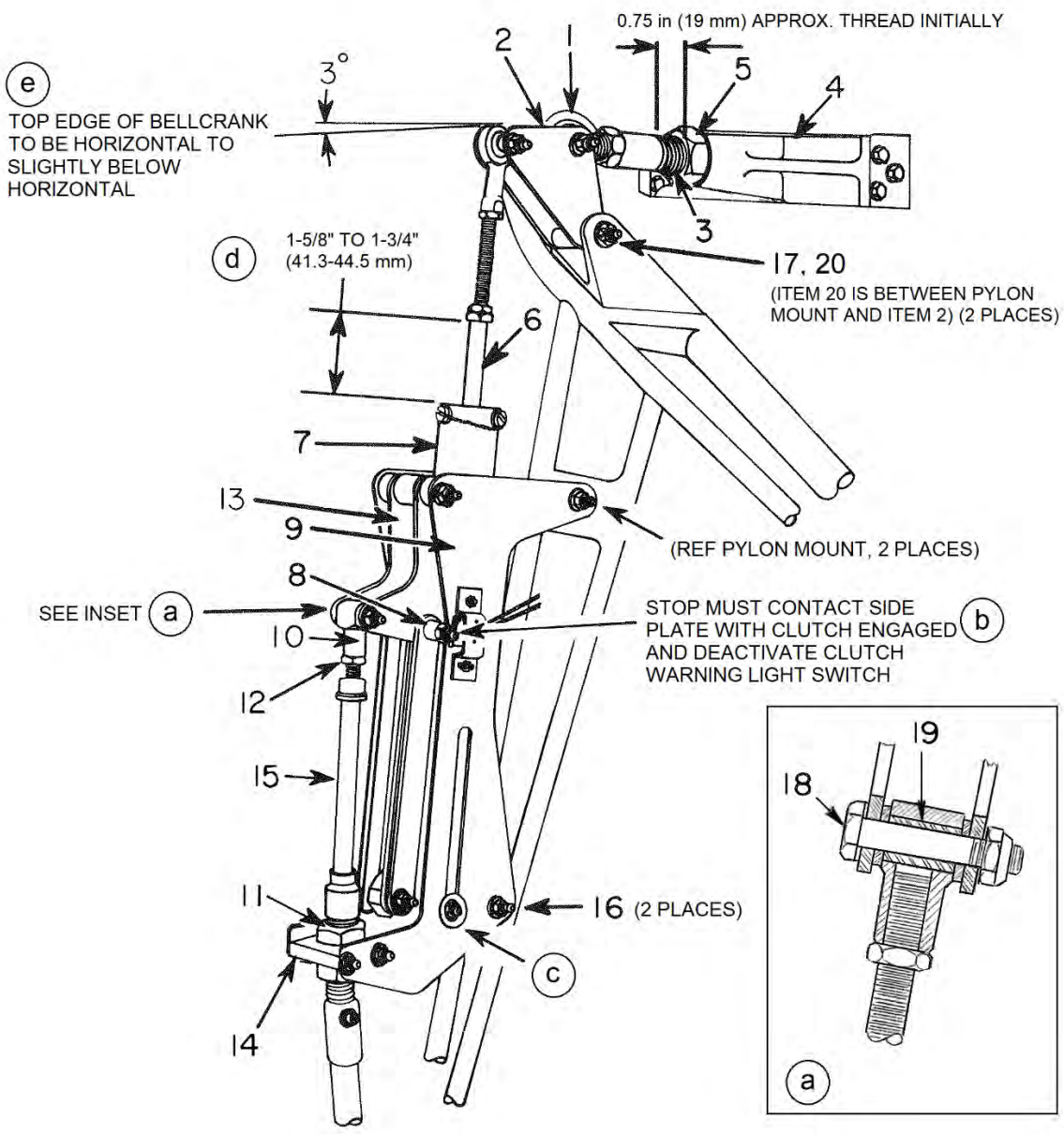

(Clutch Engaged)

1.	Rod End Bearing	11.	Jam Nut
2.	Bellcrank	12.	Jam Nut
3.	Shaft	13.	Bellcrank
4.	Yoke	14.	Mount Block
5.	Nut	15.	Cable
6.	Spring Capsule	16.	Nut (bolt head forward)
7.	Spring Capsule Housing	17.	Nut (bolt head forward)
8.	Stop	18.	Bolt
9.	Bracket (side plate)	19.	Spacer
10.	Rod End	20.	Flanged Bushing

Figure 11-3. Clutch Rigging – Belt Tension Assembly Adjustment

UNCONTROLLED COPY WHEN DOWNLOADED OR PRINTED

Visit www.enstromhelicopter.com for instructions to order an original manual and to register for email notification of updates.



Figure 11-3.1 Spring Capsule Wear Inspection Area

11-2 CLUTCH CABLE

A. Removal – Clutch Cable

NOTE: Refer to Fig. 11-3 for numbered items unless stated otherwise.

(1) Disconnect clutch cable (15) at bellcrank arms (13).

(2) Loosen jam nut (12) and remove rod end (10) and spacer from end of cable (15).

(3) Remove rubber dust covers from cable.

(4) Remove upper jam nut (11) from mount block (14).

(5) Remove two bolts from mount block (14).

(6) Slide mount block (14) over the end of cable (15).

(7) Disconnect three clamps holding cable to pylon.

(8) Remove forward jam nut from pylon mount (Fig. 11-4).

(9) Remove fiberglass seat deck (Para. 8-8.A).

(10) Loosen jam nuts from turnbuckle (3) barrel (Fig. 11-1).

(11) Turn turnbuckle barrel to disconnect clutch cable.

(12) Remove jam nut and rubber dust cover from forward end of cable.

(13) Slide clutch cable aft through pylon mount and remove.

UNCONTROLLED COPY WHEN DOWNLOADED OR PRINTED

Visit www.enstromhelicopter.com for instructions to order an original manual and to register for email notification of updates.

B. Installation – Clutch Cable

NOTE: Refer to Fig. 11-3 for numbered items unless stated otherwise.

(1) Remove rubber dust cover and outside jam nut from forward end of clutch cable.

(2) Remove clutch cable heat shield.

(3) Remove Adel clamps that secure cable to the pylon.

(4) Slide cable through pylon mount (Fig. 11-4). Position forward as far as possible.

(5) Install large jam nut, rubber dust cover, and small jam nut on cable.

(6) Connect clutch lever linkage and cable with turnbuckle (3) barrel (Fig. 11-1).

(7) Place clutch lever in engaged position. Lift and release clutch lever to stowed position. Adjust turnbuckle (3) until the clutch lever will lie flat on floor and there is 0.125 inch/3.2 mm clearance between the back side the handle and the spacer (Fig. 11-1, Detail e).

(8) Torque (175-200 in-lb/19.8-22.6 Nm) pylon mount jam nuts. Approximately two threads should extend between aft jam nut and grease fitting.

(9) Remove rubber dust cover and upper jam nut from aft end of clutch cable (15).

(10) Slide mount block (14) down over end of cable (15).

(11) Install mount block (14) bolts and washers.

(12) Install nuts and torque (12-15 in-lb/1.4-1.7 Nm).

(13) Install jam nut (11) and rubber dust cover.

(14) Install rod end jam nut (12) and rod end (10) on cable (15).

NOTE: Turn rod end on cable until it bottoms out, then back it off one-half turn.

(15) Slide spacer (19) into rod end (10) and place a heavy washer on each side of rod end. Install between bellcrank arms (13) of belt tension assembly.

(16) Install washer on bolt (18) and slide belt through bellcrank arms (13) and rod end (10).

(17) Install washer and nut on bolt (18) and torque (30-40 in-lb/3.4-4.5 Nm).

(18) Torque (80 in-lb/9.0 Nm) jam nut (12) against rod end (10).

(19) Torque (200 in-lb/22.6 Nm) the fitting (14) jam nuts with approximately two threads located above upper jam nut (11).

(20) Install three clamps securing clutch cable to pylon.

NOTE: Before tightening the turnbuckle jam nuts, complete the rigging procedure (Para. 11-1.B).

UNCONTROLLED COPY WHEN DOWNLOADED OR PRINTED

Visit www.enstromhelicopter.com for instructions to order an original manual and to register for email notification of updates.

(21) With jam nuts torqued and rigging complete, lubricate clutch cable. See Table 4-1 chart for proper grease. Grease fittings are located on aft side of pylon mount and below belt tension assembly mount block.

(22) Engage and release clutch to check for freedom of movement in the system.

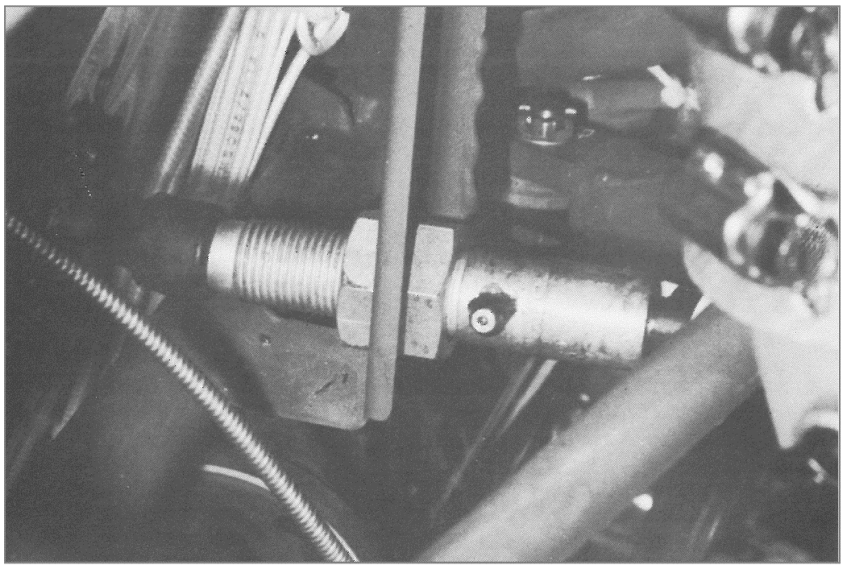

Figure 11-4. Forward End of Clutch Cable

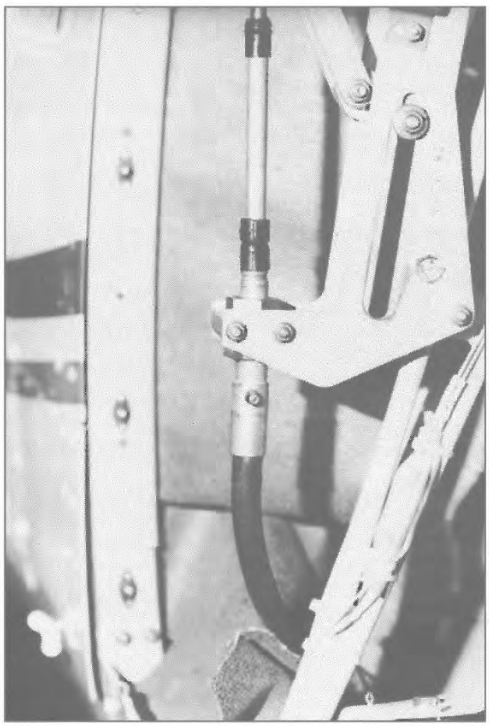

Figure 11-5. Aft End of Clutch Cable

UNCONTROLLED COPY WHEN DOWNLOADED OR PRINTED

Visit www.enstromhelicopter.com for instructions to order an original manual and to register for email notification of updates.

11-3 CLUTCH CONTROL LEVER

A. Removal – Control Lever

(1) Remove fiberglass seat assembly (Para. 8-8.A).

(2) Loosen jam nuts on turnbuckle (3) and rotate to disconnect clutch lever linkage from cable (Fig. 11-1).

(3) Remove hardware that attaches bellcrank to the seat section.

(4) Remove clevis pin on the bottom of the bellcrank to remove linkage.

(5) Remove lever and bellcrank assembly.

(6) Remove spacer from oilite bushings.

B. Inspection – Control Lever

(1) Inspect bellcrank bushings for excessive wear.

(2) Inspect roll pins and spacers in the bellcrank for security and wear.

C. Installation – Control Lever

(1) Attach linkage to the bottom of the bellcrank and install clevis pin and cotter pin.

(2) Install spacer in oilite bushings of bellcrank.

(3) Install a light washer on mount bolt and, with head of bolt inboard, slide bolt through one side of seat section.

(4) Install three washers (1/4 Harper), bellcrank and spacer assembly, and then two washers (1/4 Harper) on bolt.

(5) Slide bolt through second side of seat section and install a light washer and nut. Torque nut (30-40 in-lb/3.4-4.5 Nm).

(6) Attach clutch lever linkage to the clutch cable with turnbuckle.

NOTE: Adjust rigging per instructions (Para. 11-1.B).

(7) Tighten turnbuckle jam nuts.

(8) Inspect installation and engage and disengage the clutch to check freedom of operation.

(9) Reinstall fiberglass seat deck (Para. 8-8.D).

UNCONTROLLED COPY WHEN DOWNLOADED OR PRINTED

Visit www.enstromhelicopter.com for instructions to order an original manual and to register for email notification of updates.

11-4 JACKSTRUT AND DRIVER PULLEY ASSEMBLY

A. Removal – Jackstrut and Driver Pulley

NOTE: Refer to Fig. 11-6 for numbered items.

(1) Remove wraparound cowl and baggage compartment (Para. 8-11.A).

(2) Remove four bolts (20) and (23) connecting upper end of jackstrut (11) to bearing housing assembly (17).

NOTE: Keep shims (16) together. Temporarily install a screwdriver through bearing housing and jackstrut to keep the strut from falling and cocking the bearing in lower drive pulley.

(3) Cut safety wire and remove the six bolts (10) from the driver pulley (2).

(4) Carefully pull driver pulley (2) and strut assembly (11) from the mount flange end and lift free of the belt.

NOTE: Keep shims (1) together. Shims (1) and (16) must be kept for reinstallation as they are required to properly align the drive pulley to the driven pulley.

CAUTION: Exercise care not to cock the self-aligning bearing (5) in the pulley (2) by letting the jackstrut (11) deflect. If bearing should get cocked, don't force it straight. Slowly rotate the pulley until it aligns itself.

B. Disassembly – Jackstrut and Driver Pulley

NOTE: Refer to Fig. 11-6 for numbered items.

(1) Remove grease fitting (14) and relief valve (15) from driver pulley (2).

(2) Place pulley (2) face down on work bench with jackstrut (11) extended horizontally. Place blocks beneath strut to keep it from cocking the self-aligning bearing.

NOTE: A suggested method for heating the bearing housing is to use a fabricated oven of cinder blocks or bricks. Suspend the pulley such that the jackstrut is 2 or 3 inches from the floor. Then use a heat gun or torpedo heater and heat the assembly until the jackstrut assembly drops out of the pulley.

NOTE: Do not use blunt force, i.e., hammer, on the pulley flange surface when removing or installing the pulley.

(3) Heat pulley to approximately 250°F/121°C and, using a soft mallet, gently tap the jackstrut on lower side to remove strut and bearing assembly from pulley.

(4) Remove nut (3) and washer (4) from strut.

(5) Remove washer (12) and bolt (13) from bore.

(6) Place seal retainer (8) in press and press strut through bearing (5), seal (6) and spacer (6A), and retainer.

(7) Press inner race of seal (6A) from retainer (8) and remove O-ring (7).

UNCONTROLLED COPY WHEN DOWNLOADED OR PRINTED

Visit www.enstromhelicopter.com for instructions to order an original manual and to register for email notification of updates.

C. Cleaning – Jackstrut and Driver Pulley

(1) The pulley, washers, seal retainer and jackstrut should be washed in a cleaning solvent before inspection.

(2) The seal (6) and spacer (6A) should be cleaned with a damp, lint-free cloth.

(3) Clean bearing (5) in accordance with Para. 11-7.1.B.

D. Inspection – Jackstrut and Driver Pulley

(1) See Table 11-1 for detailed inspection requirements of the jackstrut and driver pulley assembly.

E. Assembly – Jackstrut and Driver Pulley (Fig. 11-6)

NOTE: Refer to Fig. 11-6 for numbered items.

NOTE: The seal, shim, and spacer are supplied as an assembly due to the spacer being critical to the fit of the assembly. Contact customer support if the clearance between the seal and the spacer needs to be measured or adjusted.

(1) Apply grease (MIL-PRF-81322) to O.D. of spacer (6A) and press seal into retainer (8) with conical side of spacer facing forward.

(2) Install O-ring (7) on seal retainer (8).

(3) Install seal retainer (8) on jackstrut (11).

(4) Apply grease (MIL-PRF-81322) to I.D. of male half of seal (6) and with conical side facing aft, install seal on jackstrut (11).

(5) Apply grease (MIL-PRF-81322) to I.D. of bearing (5) and press on jackstrut (11).

(6) Install washer (12) on bolt (13) and position in bore of jackstrut with bolt extending through bearing (5).

(7) Install washer (4) on bolt (13) with undercut side of washer mounted in bearing bore (5).

(8) Install nut (3) and torque to 300 in-lb/33.9 Nm.

(9) Heat driver pulley (2) to approximately 250°F/121°C.

(10) Lubricate bore of pulley and O.D. of bearing (5) with grease (MIL-PRF-81322) or equivalent.

(11) While holding jackstrut, visually align bearing (5) with pulley bore and drop into place.

CAUTION: Do not hammer or force bearing into pulley as serious damage could result to pulley and bearing. If bearing stops while only partially into bore, remove by gently tapping up on bottom side of jackstrut and repeat steps 9, 10 and 11.

(12) Install washers (9) onto bolts (10) and lubricate bolt shanks with grease (MIL-PRF-81322).

UNCONTROLLED COPY WHEN DOWNLOADED OR PRINTED

Visit www.enstromhelicopter.com for instructions to order an original manual and to register for email notification of updates.

(13) Align holes in seal retainer (8) with bolt holes in pulley and install bolts (10).

CAUTION: Exercise care not to cock the self-aligning bearing during handling.

(14) Install grease fitting (14) and relief valve (15) in driver pulley (2). Torque 40-44 in-lb/4.5-5.0 Nm.

NOTE: The grease fitting hole has a small diameter hole at base extending to the bottom of the bearing bore. The relief valve hole has an equal diameter hole extending to one-half depth of the bearing bore.

CAUTION: Exercise care not to cock the self-aligning bearing during handling.

F. Installation – Jackstrut and Driver Pulley (Fig. 11-6)

NOTE: Refer to Fig. 11-6 for numbered items.

NOTE: To prevent pulley misalignment, the original shims (1) and (16) must be used on reinstallation.

NOTE: Shim (1) is designed with one of the six holes larger for proper locating onto the engine crankshaft.

NOTE: There is a 0.125 shim between the engine flywheel and fan that always stays in place. Only shim between the fan and pulley for pulley alignment.

CAUTION: Do not install an extra shim between the crankshaft and the engine flywheel.

(1) Install shims (1) on engine crankshaft between fan and pulley (2).

(2) Carefully install driver pulley (2) on crankshaft flange while aligning belt and secure with bolts (10) as follows:

NOTE: The pulley may only be installed on the crankshaft flange in one position as one bushing is larger than the other.

NOTE: Temporarily install screwdriver or alignment aid through jackstrut upper bearing housing (17) and jackstrut (11) to keep bearing from cocking.

(a) Install pulley (2) with 2 bolts (10) 180° apart. Torque (50 ft-lb/67.8 Nm).

(b) Install screwdriver or alignment aid through upper jackstrut (11) and shims (16) and hold together with c-clamp or vise grip. Check alignment and change shimming as required. Pulley must be engaged while checking alignment.

(c) After alignment is acceptable, install remaining bolts (10) and torque (50 ft-lb/67.8 Nm) in cross pattern.

(d) Install 2 bolts (20), (23) through upper jack strut and main rotor gearbox.

(e) Safety wire bolts in pairs using .041 wire.

NOTE: Do not safety across the relief valve (15).

UNCONTROLLED COPY WHEN DOWNLOADED OR PRINTED

Visit www.enstromhelicopter.com for instructions to order an original manual and to register for email notification of updates.

(3) Install shims (16) between jackstrut (11) and jackstrut upper bearing housing assembly (17).

(4) Install four bolts (20) and (23) and washers (19) and (22) through jackstrut (11) and jackstrut upper bearing housing assembly (17).

(5) Install nuts (18) and (21) and torque.

(a) Bolt (20) and nut (18): 50-70 in-lb/5.6-7.9 Nm.

(b) Bolt (23) and nut (21): 160-190 in-lb/18.1-21.5 Nm.

(6) Remove relief valve (15) and lubricate driver pulley bearing (5) until grease appears through relief valve hole. See Table 4-1 for proper grease.

(7) Install relief valve (15) in driver pulley. Torque 40-44 in-lb/4.5-5.0 Nm.

G. Pulley Alignment Procedure

NOTE: If main rotor gearbox, engine, pulleys, or shims have been changed, it is required to check upper and lower pulley alignment using tool T-0044. Adjustments are made with engine off.

(1) Engage clutch and place tool T-0044 against aft face of upper or lower pulley. Pulleys should be parallel with a maximum gap of .010 inch or less between tool and second pulley.

(2) If pulleys are parallel but have a gap exceeding .020 inch, the shims (1) between fan and lower pulley must be changed. Add shims to bring lower pulley aft and remove shims to move pulley forward. Repeat this step until parallel gap is in tolerance.

(3) If pulleys are not parallel, add or subtract shims (16) between jackstrut upper bearing housing assembly (17) and jackstrut (11). Adding shims brings lower face of pulley towards engine and subtracting shims brings face aft.

NOTE: If shims have been changed, belt adjustment must be checked (Para. 11-1.A) and the belt track needs to be checked (Para. 11-5.B).

(4) Install baggage compartment (Para. 8-11.D) and wraparound cowl.

UNCONTROLLED COPY WHEN DOWNLOADED OR PRINTED

Visit www.enstromhelicopter.com for instructions to order an original manual and to register for email notification of updates.

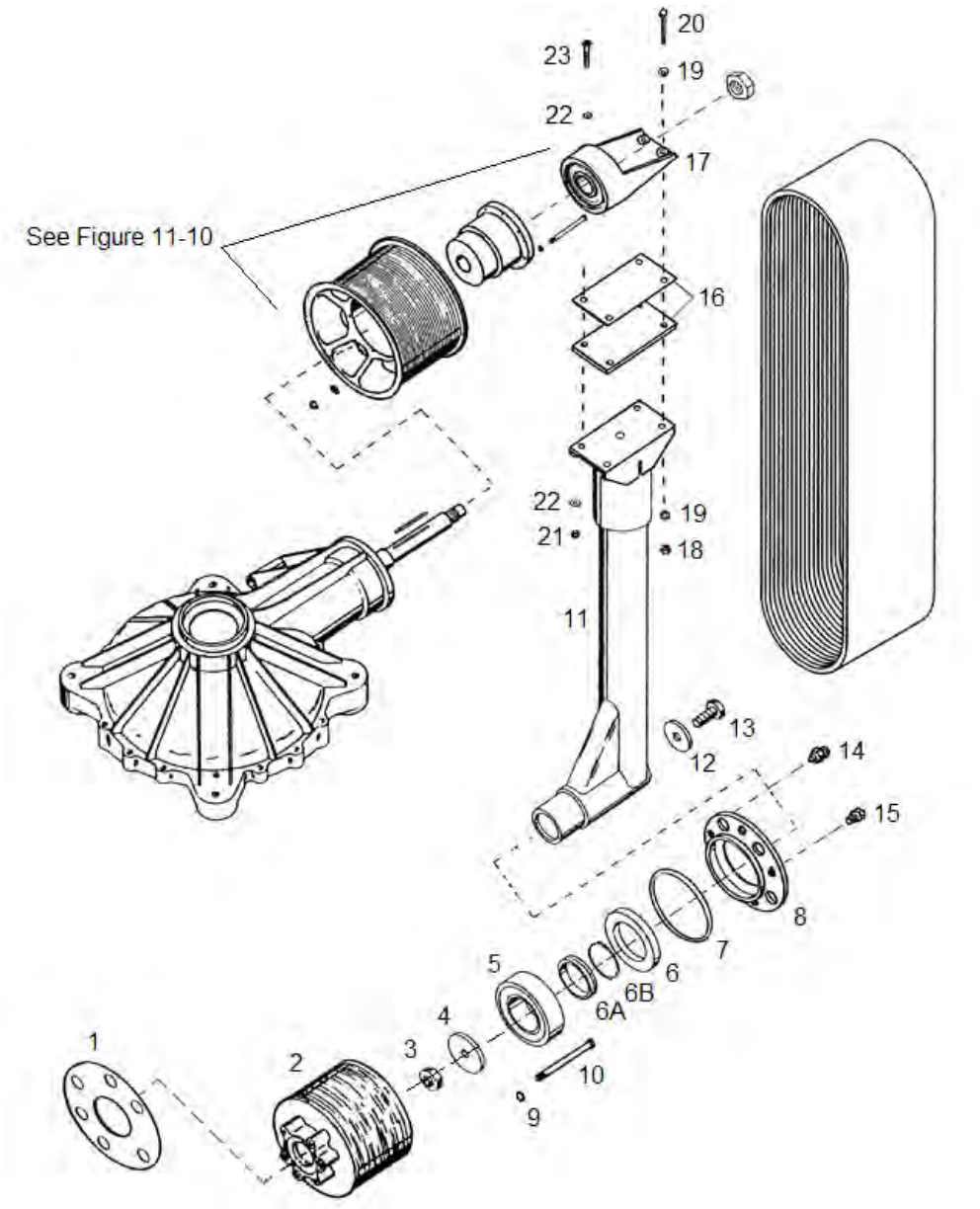

1.	Shim	12.	Washer
2.	Driver Pulley	13.	Bolt
3.	Nut	14.	Grease Fitting
4.	Washer	15.	Relief Valve
5.	Bearing	16.	Shim
6/6A.	Seal and Spacer	17.	Bearing Housing Assembly
6B.	Shim, if equipped	18.	Nut
7.	O-Ring	19.	Washer
8.	Bearing Retainer	20.	Bolt
9.	Washer	21.	Nut
10.	Bolt	22.	Washer
11.	Jackstrut Assembly	23.	Bolt

Figure 11-6. Jackstrut Assembly

UNCONTROLLED COPY WHEN DOWNLOADED OR PRINTED

Visit www.enstromhelicopter.com for instructions to order an original manual and to register for email notification of updates.

Table 11-1. Inspection Requirements – Jackstrut and Pulley Assembly

Part Number	Fig. 11-6 Item Number	Part Name	Inspection*	Serviceable Limits*	Repair Limits*	Repair or Action
28-13273-1, -13	2	Driver Pulley	(-1) Bearing Bore Dia. 3.3447 to 3.3453	+.0008	Not Repairable	Replace Pulley
			(-13) Bearing Bore Dia. 3.3447 to 3.3459	+.0008	Not Repairable	Replace Pulley
			Cracks	None Allowed	Not Repairable	Replace Pulley
			Nicks, scratches, or corrosion	.030 deep	≤ .030 deep	Polish and blend out smooth
			Depth of grooves	≤ .176	Not Repairable	Replace Pulley
			Nicks and gouges in belt grooves	None Allowed	≤ .25 long and ≤ .025 deep	Polish and blend out smooth
			Concentricity	.001 TIR	Not Repairable	Replace Pulley
			Threaded Holes	No crossed or missing threads	Not Repairable	Replace Pulley
28-13210-13	4	Washer	Visual check for defects			Replace if required
ECD020	5	Bearing	O.D. 3.3459 to 3.3465	None Allowed	Not Repairable	Replace Bearing
			I.D. 1.7712 to 1.7717	None Allowed	Not Repairable	Replace Bearing
			Axial play	None Allowed	Not Repairable	Replace Bearing
28-13319	6, 6A	Seal	Outer race on O.D. for galling	None Allowed	Not Repairable	Replace Seal
			Condition of Teflon, race and O-ring (no cuts or scratches)	None Allowed	Not Repairable	Replace Seal
			Spherical steel portion of seal (no scratches)	None Allowed	Not Repairable	Replace Seal

UNCONTROLLED COPY WHEN DOWNLOADED OR PRINTED

Visit www.enstromhelicopter.com for instructions to order an original manual and to register for email notification of updates.

Table 11-1. Inspection Requirements – Jackstrut and Pulley Assembly

Part Number	Fig. 11-6 Item Number	Part Name	Inspection*	Serviceable Limits*	Repair Limits*	Repair or Action
28-13305	8	Bearing Retainer	Seal bore dia. 3.065 to 3.069	-.005	Not Repairable	Replace Retainer
			Cracks	None Allowed	Not Repairable	Replace Retainer
28-13227-5	11	Jackstrut	Bearing surface dia. 1.7715 to 1.7721	-.0003	Not Repairable	Replace Strut
			Inspect bond for security around strut	If bond appears loose, insert .032 safety wire into loose area. Maximum depth wire can be inserted is 0.75.	In excess of .75 looseness	Replace Strut
			Dents in strut tubing	Dia. ≤ .50 and ≤ .0625 deep, maximum of one dent	Not Repairable	Replace Strut
28-13212	12	Washer	Corrosion	None Allowed	Not exceeding 15% of surface	Remove corrosion and touch up with brush-on cad plate

* All dimensions are in inches.

UNCONTROLLED COPY WHEN DOWNLOADED OR PRINTED

Visit www.enstromhelicopter.com for instructions to order an original manual and to register for email notification of updates.

11-5 DRIVE BELT

A. General Information and Troubleshooting

The drive belt is a one piece synthetic rubber Poly-V belt with a series of parallel V-ribs molded lengthwise around the inside circumference with Kevlar tension cords that makes it extremely strong, stable, and fail safe. The Kevlar cord runs in a continuous fashion around the circumference of the belt and is imbedded in a fiber reinforced rubber compound backed by 3 ply fabric for maximum cord support and adhesion. The rubber compound is both heat and oil resistant and is also used to form the rubber ribs. This composite construction holds the belt in position to make the gripping force on the pulleys to transmit the torque. The belt diameter, width, and number of grooves are all computed for stress in relation to the amount of horsepower required. Once the clutch engaged, the belt is under a constant static tension of 1400 pounds/635 kg.

Refer to the following table for troubleshooting.

Problem	Possible Cause	Action
Cuts, damage, or blisters on back of belt.	Possible separation of fabric plies.	Remove belt and inspect. Replace if plies are peeling or separating.
Fraying on edge of belt.	Belt out of track rubbing idler straps.	Track belt (Para. 11-5.B).
	Interference problem in belt alignment.	Check upper and lower pulley alignment, idler straps, and belt track.
Pieces of rib section missing.	Rib cracking.	See Belt Inspection (Para. 11-5.D).
Belt vibration.	Large pieces of belt missing causing dynamic unbalance (Fig. 11-8.1, D, E).	Replace belt.
	Belt roller improperly adjusted	Adjust roller to belt.
	NOTE: With engine off, engage clutch and check for proper rigging. Adjust belt roller to 0.38 inch/9.5 mm clearance between roller and belt before tracking belt.	

B. Tracking – Drive Belt

(1) Remove upper cowling.

NOTE: Refer to Fig. 11-7 for location and sequence of locking points used during belt tracking.

Point 1 - Belt mounting support shaft strap to pylon.

Point 2 - Nut on forward end of idler shaft.

Point 3 - Nut on aft end of idler shaft.

UNCONTROLLED COPY WHEN DOWNLOADED OR PRINTED

Visit www.enstromhelicopter.com for instructions to order an original manual and to register for email notification of updates.

(2) Decrease the torque on the bolt and nuts at Points 1 through 3. The bolts and nuts at points 2 and 3 should be snug enough that they require force to turn but not be “loose.” Point 1 must loose enough to allow the idler stabilizer strut to slide as the idler support shaft is turned.

(3) Rotate the idler support shaft using a wrench so that Point 3 is at the highest position. Then rotate the shaft approximately 75° towards the right side of the aircraft (clockwise looking forward) before starting the engine and engaging the belt drive system.

WARNING: USE CAUTION WHEN ADJUSTING THE IDLER PULLEY TRACK WITH THE ENGINE RUNNING AND THE BELT DRIVE SYSTEM ENGAGED.

(4) Start engine and slowly engage rotor system while observing idler pulley track on belt. During engagement, use a 7/8” wrench to rotate the idler shaft as necessary to keep the belt aligned.

(5) When clutch is fully engaged at idle, use 7/8" wrench and turn idler support shaft until the belt is centered on the pulley and between the actuator arm assemblies.

NOTE: When pulley is tracked it will be centered on belt.

(6) When pulley is centered, tighten bolt at pylon strap (Point 1).

(7) Holding idler support shaft with wrench, tighten forward idler shaft nut (Point 2) (50-65 ft-lb/68-88 Nm).

(8) While holding idler shaft, tighten aft nut (Point 3) (24-34 ft-lb/33-46 Nm).

(9) Increase engine to 2000 rpm and check track.

(10) If belt track is good at 2000 rpm, gradually increase to 3050 rpm while constantly watching belt track under increased power.

(11) Observe the belt “snubber” roller. While running the engine at 3050 rpm, there should be approximately 0.38 inch/9.5 mm clearance between the belt surface and the roller.

NOTE: If vibration is felt upon engaging the clutch, check that the clearance between with the belt is at least 0.38 inch/9.5 mm.

WARNING: SHUT DOWN THE ENGINE BEFORE MAKING ANY ADJUSTMENTS TO THE BELT ROLLER.

(a) If roller adjustment is required, disengage clutch, and shut off the engine.

(b) Engage clutch and adjust the belt “snubber” roller so that it is parallel to the belt surface and has 0.25-0.38 inch/6.4-9.5 mm clearance between the belt surface and the roller.

(c) After final adjustment of the idler pulley track, loosen the aft nut on the “snubber” roller and allow the roller to self-align on the idler straps. Torque the aft nut to 95-110 in-lb/10.8-12.5 Nm.

(d) Disengage clutch.

UNCONTROLLED COPY WHEN DOWNLOADED OR PRINTED

Visit www.enstromhelicopter.com for instructions to order an original manual and to register for email notification of updates.

WARNING: EXTREME CAUTION SHOULD BE USED WHEN BELT TENSION MECHANISM IS IN ENGAGED POSITION. PERSONAL INJURY COULD OCCUR.

(e) Start engine, engage rotor system, and verify that the belt “snubber” roller clearance (0.38 inch/9.5 mm) is correct.

(12) Inspect assembly for security before installing cowling.

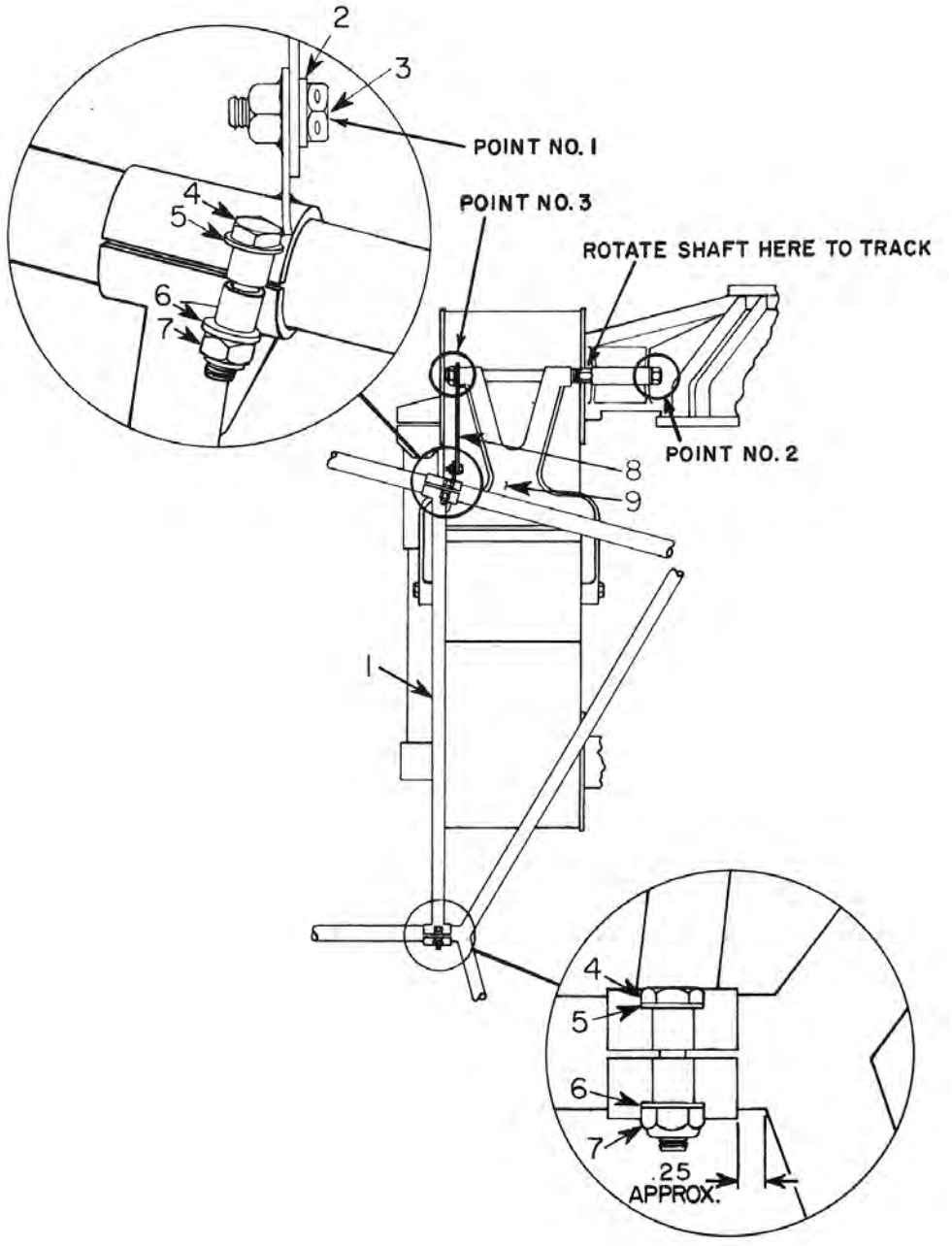

Figure 11-7. Idler Stabilizer and Belt Tracking Adjustment Points

UNCONTROLLED COPY WHEN DOWNLOADED OR PRINTED

Visit www.enstromhelicopter.com for instructions to order an original manual and to register for email notification of updates.

C. Removal – Drive Belt

(1) Remove cowling.

(2) Remove jackstrut and driver pulley assembly (Para. 11-4).

(3) Disconnect the flex coupling (Fig. 11-9) as follows:

(a) Remove the bolts (5), washers (6), beveled washers (2), and nuts (7) connecting aft hub (1) of coupling to flex element (3).

(4) Loosen aft nut (14) on belt roller (11) (Fig. 11-14).

(5) Remove hardware attaching aft actuator arm (10) to idler yoke assembly (8) and idler yoke end (15). Let the actuator arm assembly hang in a vertical position on the belt roller (11).

(6) Remove bolts from the forward drive shaft three bearing assembly mounts to avoid bending the shaft. Push the drive shaft to one side to clear the pulley and then secure with safety wire.

NOTE: Mark location of bearing assemblies before removal.

NOTE: Use care to avoid causing a bend or bow in the driveshaft.

NOTE: The F-28F models may be equipped with a strobe mounted over the drive shaft. Remove the strobe mount, if installed.

(7) Ease the belt off of the top pulley and, with drive shaft to one side, slide the belt between the coupling halves to remove.

D. Inspection – Drive Belt

NOTE: Drive belt conditions that could be identified during an inspection are described as follows.

Rib cracking is a normal occurrence on this belt. The cracks normally extend to the base of the rib and go no further. Numerous cracks of this type are not significant. The belt should be examined for cracks which have extended below the base of the ribs and, if this has occurred, the belt should be removed. This is very important if the cracks extend to the cord line and the cord is exposed when the crack is opened. Loss of small pieces or rib section may accompany the rib cracking. This is normally a random occurrence. The belt should be replaced if there is a loss of three or more adjacent ribs for a length of two inches or more. The belt should be replaced if there is any piece of rib missing which is of sufficient depth to leave the cord exposed. A missing belt rib piece can eventually cause the belt to slip. Usually, the belt will cause vibrations because it becomes unbalanced, and these vibrations are noticed a long time before the belt starts to slip.

UNCONTROLLED COPY WHEN DOWNLOADED OR PRINTED

Visit www.enstromhelicopter.com for instructions to order an original manual and to register for email notification of updates.

The back of the belt should be examined for cuts or damage and blisters which may indicate separation of the fabric plies. The belt should be replaced if there is any damage which appears to penetrate the fabric cover or if any blisters are present. A small crack in the back of the belt at the fabric splice is not significant, and often this is the fabric overlap created during manufacture of the belt. The belt should be replaced, however, if there is any loosening or peeling of the fabric in the splice area. The backing will take a long time to peel and, if this happens, it will cause vibrations, make a mess, and probably cause a “burning rubber” odor. The vibrations and the flapping backing material might damage some of the surrounding parts but normally not to the point where they will fail. This will also happen a long time before the belt fails completely.

The edge of the belt should be examined for emerging cord, cord damage or damage that extends beyond the first "V" groove. Also, the belt edge should be examined for signs of rubber separation. The belt should be replaced if there is any sign of emerging cord, cord damage, damage beyond the first “V” groove, or rubber separation from the cord. If any of these conditions are present, the cord can get torn and pulled out at the sides. When this happens, the belt will start to “unwind.” The cord will normally break before it unwinds very far, the pilot will smell “burning rubber” and a vibration will be felt. A pilot will normally have ample time to make a precautionary landing. This is the most serious of the possible failure modes. The belt is 6 inches (15 cm) wide. Tests performed at the factory have proven that 1.5 inches (3.5 cm) is more than enough to fly the helicopter at full power.

Perform an as-installed belt inspection with cowling removed and the clutch disengaged. Slowly rotate the belt around the diameter of the upper pulley by placing a hand flat against the belt surface, as shown in Fig. 11-8 – *Proper Method*.

WARNING: DO NOT GRIP EDGE OF BELT TO ROTATE (Fig. 11-8 – *Improper Method*). GRIPPING THE EDGE MAY RESULT IN FINGERS BEING PINCHED IN BOTTOM PULLEY, CAUSING SERIOUS INJURY.



Proper Method –
Hand flat against belt surface



Improper Method –
DO NOT grip edge of belt

Figure 11-8. Belt Inspection – Safe and Unsafe Methods

UNCONTROLLED COPY WHEN DOWNLOADED OR PRINTED

Visit www.enstromhelicopter.com for instructions to order an original manual and to register for email notification of updates.

(1) Belt Rib Surface:

(a) Examine the belt for cracks which have extended below the base of the ribs. If this has occurred, and the cords are exposed, the belt should be removed. Examples of rib cracks are depicted in Fig. 11-8.1. Photographs A, B, and C are examples of serviceable belts.

1 Replace the belt if rib cracks extend below the base of the ribs.

2 Replace the belt if it has been determined that cord failure exists.

(b) Examine the belt for loss of small pieces of rib section that may accompany the rib cracking. Examples of loss of pieces of rib section are depicted in Fig. 11-8.1. Photographs D, E, and F are examples of unserviceable belts which should be replaced.

1 Replace the belt if there is a loss of three or more adjacent ribs for a length of two inches or more.

2 Replace the belt if there is any piece of rib missing which is of sufficient depth to leave the cord exposed.

3 Replace the belt when missing pieces of the “V” area becomes large enough to cause vibration in the drive system.

4 Replace the belt if it has been determined that cord failure exists.

(2) Back of Belt:

(a) Examine the back of the belt for cuts or damage and blisters. Replace the belt if there is any damage which appears to penetrate the fabric cover or if any blisters are present.

(b) Examine the back of the belt for a crack at the fabric splice. The belt should be removed if there is any loosening or peeling of the fabric in the splice areas. Examples of fabric splices are depicted in Fig. 11-8.2. Photograph G and Photograph H are examples of a serviceable belt. Photograph I is an example of an unserviceable belt.

(3) Edges of Belt:

(a) Examine the edge of the belt for signs of wear. This does not affect the belt directly but would indicate that there is a tracking or interference problem. An example of light wear (cord fraying) is depicted in Fig. 11-8.3. Examples where the belt comes into close contact with adjacent structures, such as the lower pulley assembly is depicted in Fig. 11-8.4.

1 Replace the belt whenever the operator deems it necessary.

2 The presence of rubber residue at the forward and aft edges of the center pulley may indicate interference and breakdown of the belt. Check belt tracking (Para. 11-5.B).

UNCONTROLLED COPY WHEN DOWNLOADED OR PRINTED

Visit www.enstromhelicopter.com for instructions to order an original manual and to register for email notification of updates.

(b) Examine the forward and aft side belt edges for adhesive-sealed edges and signs of separation or deterioration. Examples of sealed belt edges are depicted in Fig. 11-8.5. Examples of deteriorated sealed belt edges are depicted in Fig. 11-8.6.

1 If the belt edge was previously sealed but the belt edge has deteriorated as shown in Fig. 11-8.6 (damage goes beyond the first “V” groove) or if any loose or protruding cords are found, remove the belt, and send back to Enstrom for warranty.

2 If the belt edge was previously sealed but portions of adhesive are missing, repair the belt in accordance with Para. 11-5.D.1. Continue the belt inspection requirements as follows before proceeding with repairs.

(c) Examine the forward and aft side belt edges for exposed or loose cord. An example of exposed cord is depicted in Fig. 11-8.7. Exposed cord limits are explained in the figure.

1 Replace the belt if it has been determined that cord failure exists.

2 Remove the belt if any portion of exposed cord is greater than 40% of the cross section thickness. Seal those portions of exposed cord in accordance with Para. 11-5, D.1 and return the belt to service.

(d) Examine the belt edge for a cord tail. An example of a cord tail is depicted in Fig. 11-8.9.

1 Remove the belt if it has cord tail. Trim the cord tail, repair the belt in accordance with Para. 11-5.D.1, and return the belt to service.

D.1 Repair – Drive Belt

(1) Authorized materials used in the procedure to seal the belt edge are listed as follows:

Denatured alcohol (solvent)
3M 847 Nitrile High Performance Rubber and Gasket Adhesive
Clean shop cloths

(2) Surface preparation:

(a) Clean the belt surface using a cloth wetted with solvent.

(b) Trim loose fabric threads on fabric backing only.

(3) Adhesive application:

(a) Prepare the 3M 847 adhesive in accordance with the manufacturer’s instructions.

(b) Apply a bead of 3M 847 on the belt edge surface ensuring the exposed Kevlar cord is covered with adhesive.

(c) Remove any adhesive from the rib edge and the back of belt using a clean cloth wetted with solvent.

UNCONTROLLED COPY WHEN DOWNLOADED OR PRINTED

Visit www.enstromhelicopter.com for instructions to order an original manual and to register for email notification of updates.

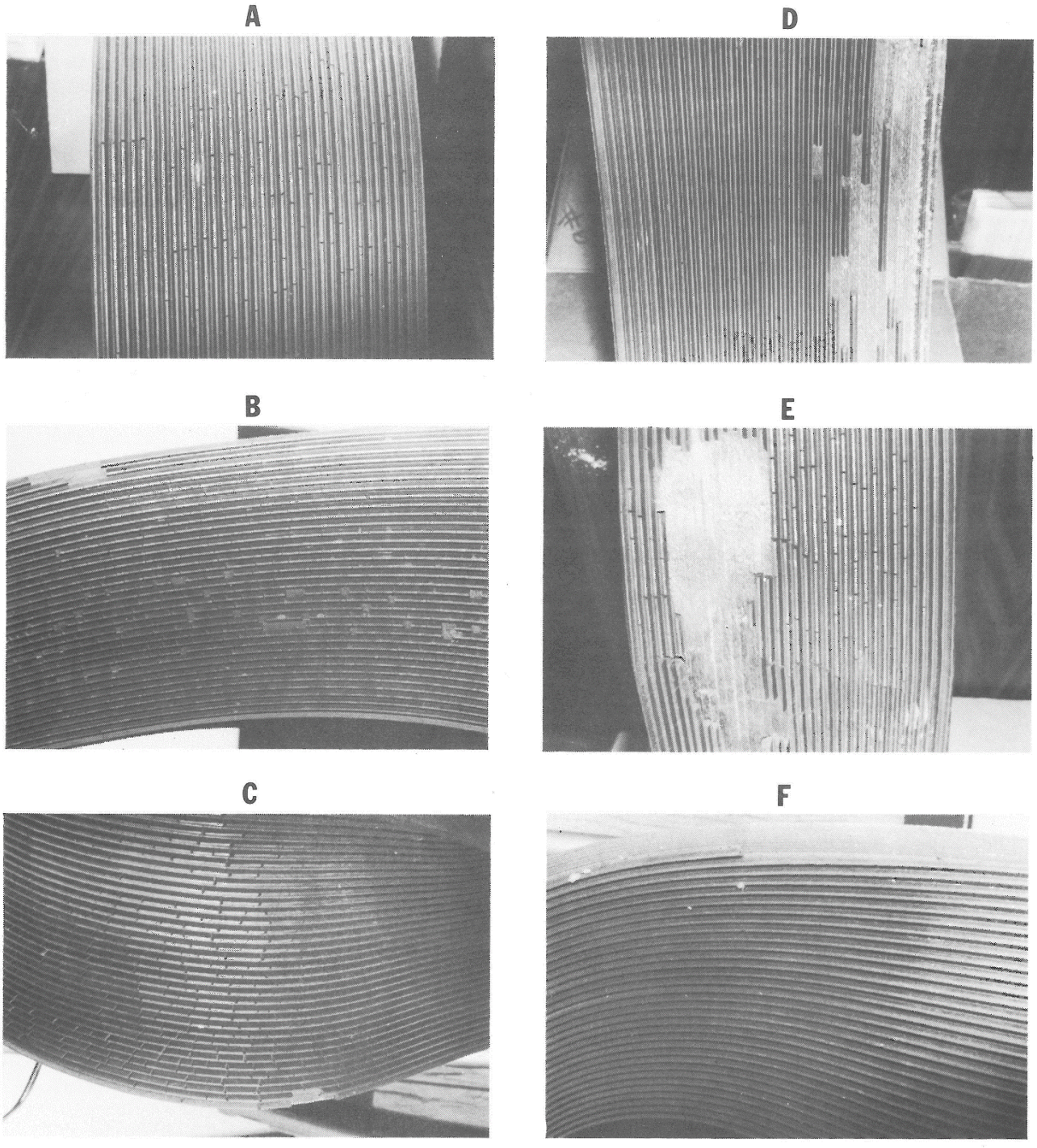

A through C – Serviceable

D through F - Unserviceable

Figure 11-8.1 Drive Belt Visual Inspection – Ribs

UNCONTROLLED COPY WHEN DOWNLOADED OR PRINTED

Visit www.enstromhelicopter.com for instructions to order an original manual and to register for email notification of updates.



G - Serviceable



H - Serviceable, Monitor Every 50 Hours



I - Unserviceable

Figure 11-8.2 Drive Belt Visual Inspection – Fabric Back

Visit www.enstromhelicopter.com for instructions to order an original manual and to register for email notification of updates.

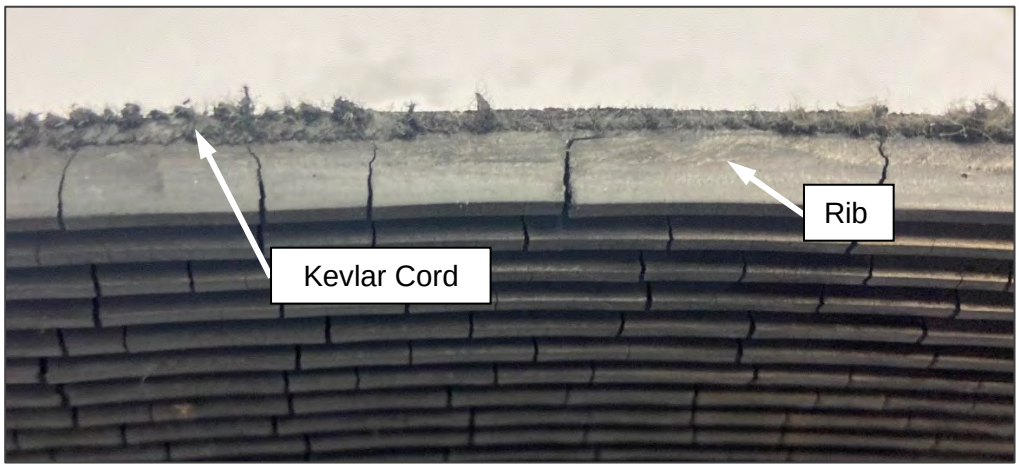

Figure 11-8.3 Drive Belt Visual Inspection – Edge Cord Fraying

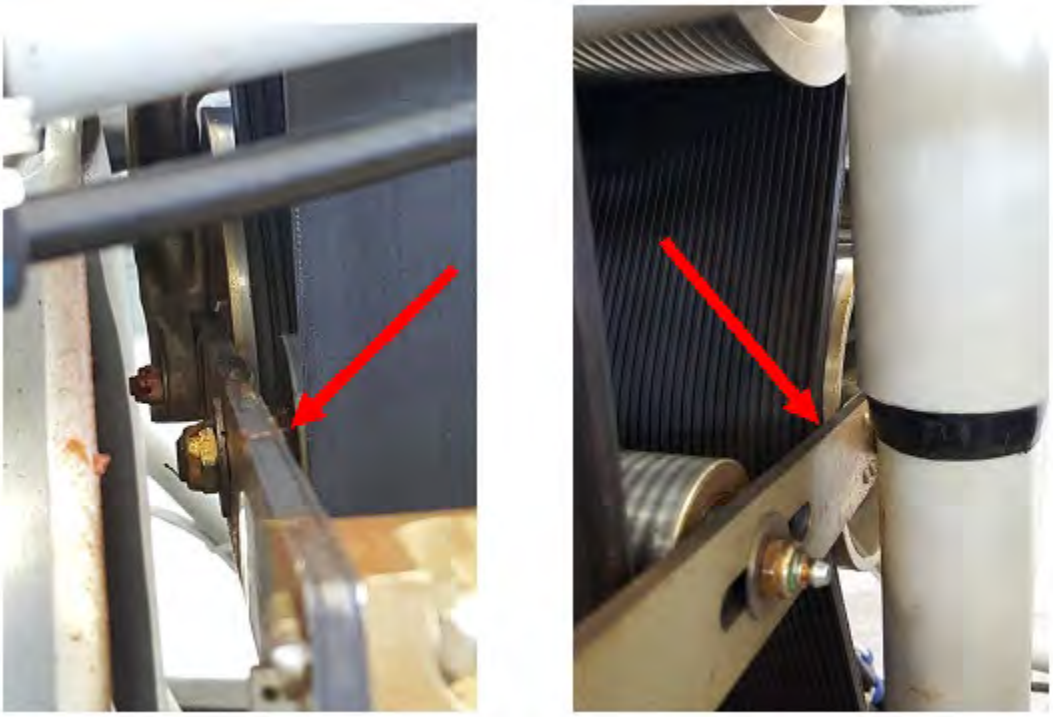

Inspection point – Center pulley, forward edge

Inspection point – Center pulley, aft edge

Figure 11-8.4 Adjacent Structure Inspection for Belt Residue

UNCONTROLLED COPY WHEN DOWNLOADED OR PRINTED

Visit www.enstromhelicopter.com for instructions to order an original manual and to register for email notification of updates.

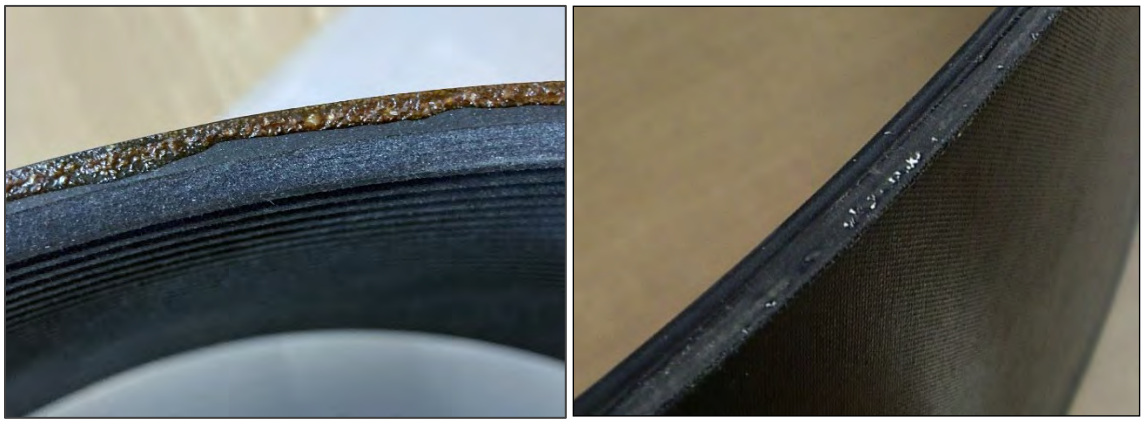

Figure 11-8.5 Drive Belt Visual Inspection – Sealed Belt Edges

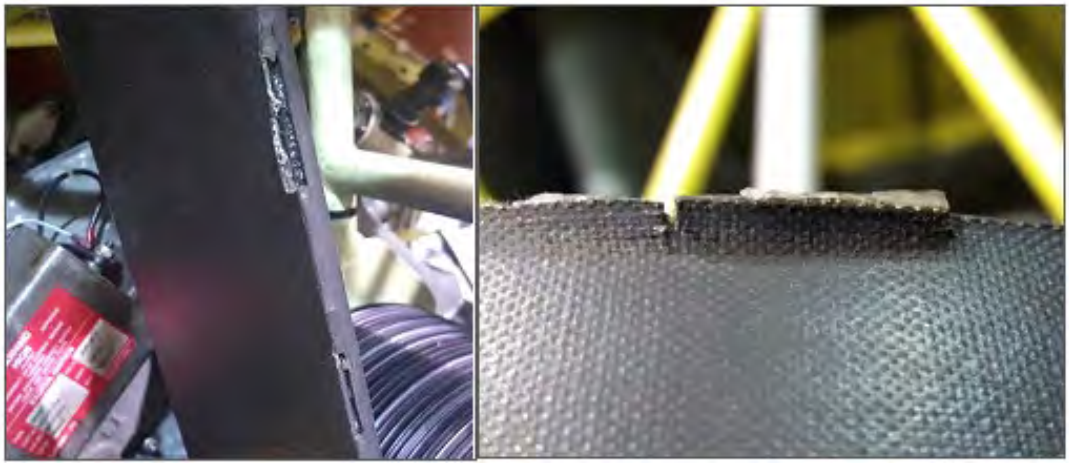

NOTE: Enstrom Turbine Model Drive System Shown

Figure 11-8.6 Drive Belt Visual Inspection – Deteriorated Sealed Belt Edges

UNCONTROLLED COPY WHEN DOWNLOADED OR PRINTED

Visit www.enstromhelicopter.com for instructions to order an original manual and to register for email notification of updates.

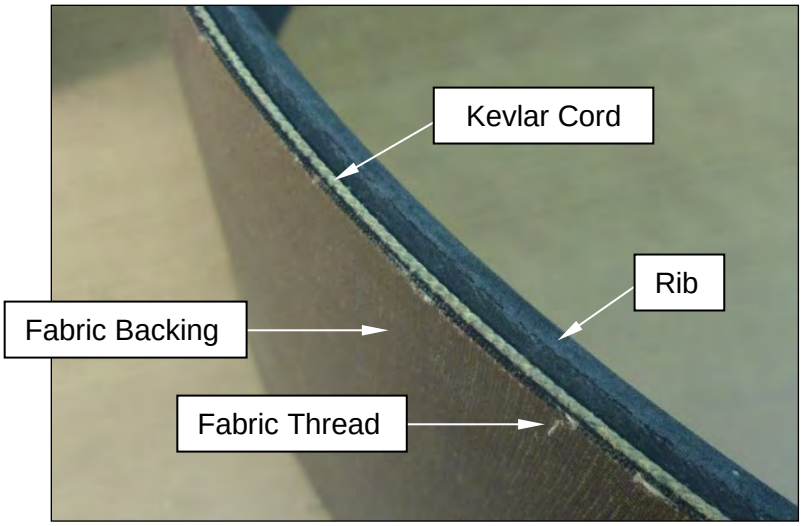

Figure 11-8.7 Drive Belt Visual Inspection – Exposed Cord

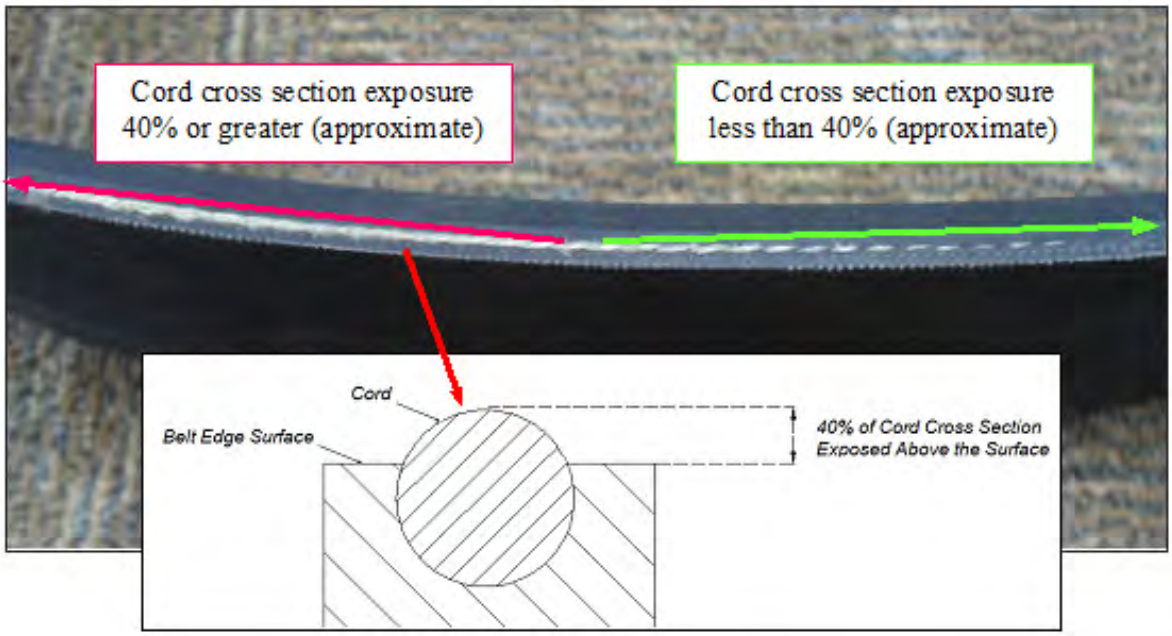

Figure 11-8.8 Drive Belt Visual Inspection – Exposed Cord Limit Criteria

UNCONTROLLED COPY WHEN DOWNLOADED OR PRINTED

Visit www.enstromhelicopter.com for instructions to order an original manual and to register for email notification of updates.



Figure 11-8.9. Drive Belt Visual Inspection – Cord Tail

CAUTION: Failure to remove excess adhesive from the rib edge or from the back of belt may impair smooth belt operation.

(d) Allow the adhesive to dry for three hours, turn over and repeat the application for the edge on the other side of the belt.

(e) Hang the belt on a rack and allow the adhesive to cure for a minimum 12 hours.

NOTE: Finished sealed belt edge surface will appear similar to the sealed edge surface depicted in Fig. 11-8.5 (photograph on the left).

E. Installation – Drive Belt

NOTE: Refer to Fig. 11-14 for numbered items unless stated otherwise.

(1) Slide the belt between the drive shaft and forward coupling half and ease belt on top of the upper pulley.

(2) Pivot aft actuator arm assembly (10) back into position.

(3) Install bolts (19) and (20), washers (21) and (22), and nut (23). Torque (12-15 in-lb/1.4-1.7 Nm) and safety (.032).

(4) Install bolt (24), washer (25), bushing (9) from the inside of the actuator arm assembly (10). Install the aft washer (25) and the nut (27). Torque nut (50-70 in-lb/5.6-7.9 Nm) and install cotter pin (28).

(5) Ensure nut (14) torque (95-110 in-lb/10.7-12.4 Nm).

UNCONTROLLED COPY WHEN DOWNLOADED OR PRINTED

Visit www.enstromhelicopter.com for instructions to order an original manual and to register for email notification of updates.

(6) Return the drive shaft pillow blocks to the original position and install bolts. Use the same shims as originally installed under the block. Torque bolts (20-25 in-lb/2.3-2.8 Nm).

(7) Flex Coupling – Proceed as follows: (see Fig. 11-9)

(a) Align aft coupling hub (1) with flex element (3). With curved side of flex coupling washers (2) against flex element, install mounting hardware.

NOTE: Washers (6) may be used between the flex coupling washers (2) and coupling hub flanges (8) to align and center the flex elements.

(b) Torque the coupling hub bolts (50-70 in-lb/5.6-7.9 Nm).

(8) Install jackstrut and pulley assembly (Para. 11-4).

(9) Engage clutch and check rigging (Para. 11-1).

(10) Check belt roller clearance (0.38 inch/9.5 mm) between belt surface and roller.

(11) Track drive belt (Para. 11-5.B).

(12) Inspect entire belt drive system (Para. 11-1.A; Para. 11-8.2; Para. 11-9.E).

(13) Install cowling.

UNCONTROLLED COPY WHEN DOWNLOADED OR PRINTED

Visit www.enstromhelicopter.com for instructions to order an original manual and to register for email notification of updates.

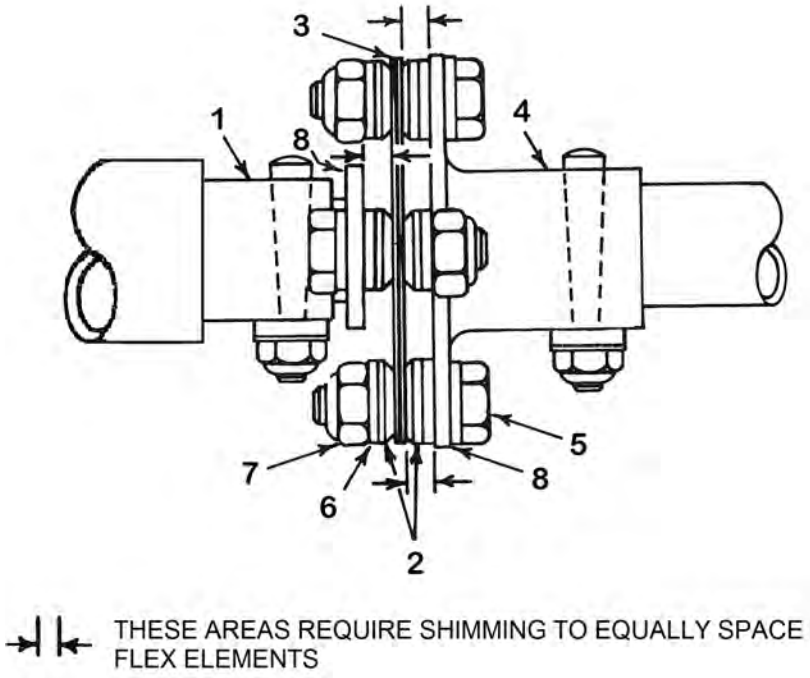

1.	Pinion Shaft	5.	Bolt
2.	Flex Coupling Washer (Beveled)	6.	Washer
3.	Flex Pack	7.	Nut
4.	Aft Hub	8.	Hub Flange

Figure 11-9. Flex Coupling Installation

UNCONTROLLED COPY WHEN DOWNLOADED OR PRINTED

Visit www.enstromhelicopter.com for instructions to order an original manual and to register for email notification of updates.

11-6 MAIN ROTOR TRANSMISSION

A. General Description

The main rotor transmission (gearbox) is a 90° drive unit powered from the engine by a belt drive system. The internal ring gear and pinion are machined to precision tolerances, heat treated, and shot peened to provide maximum life. Because of the high contact ratio which can be obtained by the spiral angle gear, the overlap of contact contributes to smooth and quiet operation. A wet sump splash system is utilized to provide adequate lubrication to the ring and pinion gears. This eliminates the need for a gear-driven oil pump. A magnetic chip detector is located in the sump, and can be removed to inspect for metallic particles. (Note: The chip detector was not standard for early F-28F helicopter transmissions.) An oil temperature probe is mounted either in the bottom of the gearbox or at the bottom of the pinion case of older transmissions. The probe is connected to a transmission temperature gauge on the instrument panel. Also, a sight gauge is located on the right rear side of the gearbox to check the oil level. The gearbox incorporates an overrunning clutch in the upper pulley assembly which is mounted on the pinion shaft. The overrunning clutch unit provides a disconnect from the engine in the event of a power failure and permits the main and tail rotors to rotate to accomplish safe autorotative landings.

B. Removal – Main Rotor Transmission

NOTE: If the rotor hub is to be removed, it is recommended to break the mast nut torque before removing the main rotor blades (use tool T-0197-7 or digital torque multiplier ATP761).

(1) Remove the main rotor blades (Para. 9-8).

(2) Drain fuel and remove the fuel tanks (Para. 13-10).

(3) Remove the wraparound cowling.

(4) Remove the bulkhead that crosses over the gearbox pinion area.

(5) Remove baggage box (Para. 8-11).

(6) Disconnect the lateral and longitudinal push-pull rods from the lower swashplate (Para. 12-10.A.4 and A.5).

(7) Remove the fiberglass cover above the seat deck inside the cabin and disconnect the collective push-pull rod from the collective walking beam (Para. 12-11.A.4).

(8) Disconnect the following:

(a) Temperature probe adapter from the fitting on bottom of gearbox.

(b) Chip detector.

(c) Low rotor warning magnetic pick-up.

(9) Remove jackstrut and pulley (Para. 11-4).

(10) Remove the idler assembly with the drive belt as follows:

UNCONTROLLED COPY WHEN DOWNLOADED OR PRINTED

Visit www.enstromhelicopter.com for instructions to order an original manual and to register for email notification of updates.

(a) Remove bolt (41) and hardware to disconnect rod end (38) from the bellcrank (Fig. 11-14).

(b) Remove nut (63) and washer (64) from shaft (62) (Fig. 11-16).

(c) Remove bolt (51) and washer (51) to disconnect idler stabilizer strut (49) from the brace assembly (57) (Fig. 11-16).

NOTE: Index the shaft (62) to the main rotor transmission before removal to aid in tracking the belt on reassembly.

NOTE: It may be necessary to rotate the shaft (62) while withdrawing the assembly from the transmission so the idler yoke clears the pylon brace assembly (57).

(d) Remove the idler pulley assembly with shaft (62) and drive belt.

NOTE: The gearbox can be removed by leaving mast nut loosely secured and lifting hub and gearbox as a unit using sling T-0011.

NOTE: If it is preferred to remove the main rotor hub, refer to Para. 9-2.A for hub removal procedures. Tool T-0017 is necessary if this method is used.

(10) Remove mount bolts from the gearbox (4 places).

NOTE: A 7/16" wrench (12 point) will have to be ground thinner for installation on the aft left gearbox mount bolt.

(11) Using a hoist, carefully lift gearbox from pylon mount.

NOTE: For swashplate removal see Section 12, Flight Controls.

NOTE: Gearboxes being returned for overhaul should include the pinion half of the driveshaft coupling, the bearing adapter (2), and the nut (1) (Fig. 11-10). The nut should be torqued against a spacer to protect the gears during shipping.

C. Seal Replacement – Main Rotor Transmission

NOTE: This procedure can be accomplished with the transmission installed.

(1) Upper mast seal replacement:

(a) Remove the main rotor hub (Para. 9-2.A).

(b) Remove the slinger from the mast.

(c) Remove the seal from the transmission housing.

NOTE: Wrap a piece of shim stock around the upper portion of the mast to protect the seal from damage during installation. Reposition the shim stock to the lower end of the mast when installing the seal into the transmission housing.

UNCONTROLLED COPY WHEN DOWNLOADED OR PRINTED

Visit www.enstromhelicopter.com for instructions to order an original manual and to register for email notification of updates.

(d) Lubricate the lip of the new seal (MIL-PRF-81322). Install the seal into the transmission housing. Tap the seal into the housing, as required, to seat the seal.

(e) Install the slinger into position and secure in place using RTV-732 sealant, or equivalent general purpose silicone adhesive.

(f) Install the main rotor hub (Para. 9-2.E).

(2) Pinion seal replacement:

NOTE: This procedure can be accomplished with the transmission installed.

(a) Remove the upper pulley assembly (Para. 11-7.C).

(b) Raise the aircraft using the ground handling wheels. Block the aft end of the skid tubes so the aircraft will not rock back onto the tail rotor guard.

NOTE: Later production transmissions incorporate a seal retainer with a retaining ring to secure the pinion seal. Transmissions returned to Enstrom for overhaul/repair will have the new seal retainer incorporated. If the gearbox does not have the seal installed from the aft side with the retainer ring, contact Enstrom Customer Support.

(c) Remove the retaining ring and pinion seal from the seal retainer.

NOTE: Wrap a piece of shim stock around the bearing adapter in the pinion assembly to protect the seal from damage during installation.

(d) Lubricate the lip of the new seal (MIL-PRF-81322). Install the seal onto the pinion shaft and install the seal into the seal retainer. Tap the seal in the retainer, as required, to seat the seal.

(e) Reinstall retaining ring.

(f) Install the upper pulley assembly (Para. 11-7.H).

(3) Lower mast seal replacement:

NOTE: It is necessary to remove the main rotor transmission from the aircraft to replace the lower mast seals. It is not necessary to remove the hub from the transmission.

(a) Remove the transmission (Para. 11-6.B).

CAUTION: Use extreme care when removing the nuts that secure the seal retainer. The transmission will have to be returned for repair if any of the retaining bolts are pushed into the transmission.

CAUTION: Use extreme care when removing the seal retainer from the bottom of the transmission. If the shims(s) located between the seal retainer and spacer are damage, they must be replaced with the correct thickness of shims.

UNCONTROLLED COPY WHEN DOWNLOADED OR PRINTED

Visit www.enstromhelicopter.com for instructions to order an original manual and to register for email notification of updates.

NOTE: When ordering a replacement, note that the seal and seal retainer must be ordered as a complete assembly and will include a set of shims. (Ref. P/N 28-13122-991)

WARNING: USE EXTREME CAUTION WHEN HANDLING HEATED PARTS TO PREVENT FROM INJURING PERSONNEL. USE PROTECTIVE GLOVES WHEN HANDLING HEATED PARTS.

(b) Disconnect the upper walking beams from the control rods (Para. 12-11.A.10).

(c) Remove walking beam from the pivot straps (Para. 12-11.A.5).

(d) Remove bolts that secure the upper swashplate to the gearbox (Para. 12-11.A.12) and withdraw the upper and lower swashplate as an assembly with control rods and walking beam attached.

(e) Remove the nuts securing the seal retainer.

(f) Heat the seal retainer to weaken the adhesive bond and use a wedge-type tool to pry off the retainer with the old seals from the transmission housing.

(g) Lubricate the lips of the new seals and pack the area between the two seal lips with grease (MIL-PRF-81322). Apply a bead of sealant (Loctite 587, or equivalent) to the seal retainer flange.

(h) Replace any damaged shims with new shims.

NOTE: Wrap a piece of shim stock around the mast retaining nut to protect the seal from damage during installation.

(i) Paint the mating surfaces of the transmission spacer and the seal retainer with Loctite SI 5900, or equivalent.

(j) Install the seal retainer (supplied with new seals).

(k) Install the nuts and torque in a crossing pattern (50-70 in-lb/5.6-7.9 Nm).

(l) Install the swashplate assemblies and control rod assembly (Para. 12-11.F.3), walking beam (Para. 12-11.F.7), and connect walking beams (Para. 12-11.F.9).

(m) Install the main rotor transmission (Para. 11-6.D).

D. Installation – Main Rotor Transmission

(1) If required, install main rotor hub on gearbox (Para. 9-2.E).

CAUTION: Hub must be installed with index marks on spline adapters aligned to properly phased spine on rotor shaft, or serious flight control problems will result.

(2) If required, install the flight control assemblies, as applicable.

(a) Install the swashplate assemblies and control rod assembly (Para. 12-11.F.3), walking beam (Para. 12-11.F.7), and connect walking beams (Para. 12-11.F.9).

UNCONTROLLED COPY WHEN DOWNLOADED OR PRINTED

Visit www.enstromhelicopter.com for instructions to order an original manual and to register for email notification of updates.

(3) Lightly coat the top of the pylon mount pads and the shank of the mount bolts with grease (MIL-PRF-81322).

(4) Using sling T-0011, lift gearbox into position on pylon.

(5) Install gearbox mount hardware (4 places) including the shoulder harness support assembly cables. Torque bolts (240 in-lb/27.1 Nm).

NOTE: Install the shoulder harness support cable attachments between the washers above the nut.

NOTE: Hardware with the self-locking feature may be reused in accordance with Table 2-12.

(6) Install idler assembly with drive belt:

(a) Install the idler pulley assembly (Para. 11-8.F.(3) through (5)).

(b) Install yoke rod end (38) (Para. 11-8.J.(2) and (3)).

(7) Install jackstrut and pulley assembly (Para. 11-4.F).

(8) Connect the following:

(a) Temperature probe adapter to fitting on bottom of gearbox.

(b) Chip detector.

(c) Low rotor warning magnetic pick-up.

(9) Install fiberglass cover above seat deck.

(10) Install baggage box (Para. 8-11).

(11) Install bulkhead over gearbox pinion area.

(12) Install fuel tanks and connect fuel lines (Para. 13-10.B.(2)).

(13) Service main rotor transmission (Para. 4-12).

(14) Check all connections for security.

(15) Install main rotor blades.

(16) Service the fuel tanks (Para. 4-4).

(17) Track drive belt (Para. 11-5.B).

(18) Install wraparound cowling.

(19) Perform preliminary flight test procedure (Para. 12-13.A).

(20) Track main rotor blades (Para. 12-2).

UNCONTROLLED COPY WHEN DOWNLOADED OR PRINTED

Visit www.enstromhelicopter.com for instructions to order an original manual and to register for email notification of updates.

11-6.1 MAIN ROTOR CHIP DETECTOR

A. Removal – Chip Detector (Fig. 4-1, View E)

NOTE: Later F-28F helicopters and all 280FX helicopters are equipped with the main rotor transmission chip detection system. Refer also to Para. 4-62 for main rotor chip indication procedures.

NOTE: Do not disconnect the wire unless removing the chip plug.

WARNING: DO NOT OPERATE THE HELICOPTER WITH THE CHIP DETECTOR REMOVED AS SEVERE LUBRICATION LOSS MAY OCCUR.

(1) Remove the access panel below the left fuel tank.

(2) Grasp the chip detector plug and push upward.

(3) While holding upward pressure, begin turning the plug counterclockwise.

(4) Turn the plug counterclockwise 1/4 turn.

(5) Pull the plug out of the socket in the base fitting.

(6) Inspect the plug for chips (Para. 4-62.A).

(7) After determining that the transmission is airworthy, clean the magnetic plug with a soft cloth or with a strong magnet attached to a pointed object or use compressed air. Use caution to avoid scratching the magnetic plug.

B. Installation – Chip Detector

(1) Insert the plug into the socket in the base fitting.

(2) Align the lugs in the plug with the slots the base fitting.

(3) Push plug upward while turning plug clockwise (approximately 1/4 turn).

(4) When the plug stops turning, pull downward.

(5) Check the plug to ensure that it is locked in the base and that there is no leakage.

UNCONTROLLED COPY WHEN DOWNLOADED OR PRINTED

Visit www.enstromhelicopter.com for instructions to order an original manual and to register for email notification of updates.

11-7 OVERRUNNING CLUTCH AND UPPER PULLEY ASSEMBLY

A. Troubleshooting – Clutch and Upper Pulley

Problem	Possible Cause	Required Action
Rotor and engine rpm needles do not split when power is cut back.	Overrunning clutch lockup.	Replace clutch.
Erratic needle movement - engine tach seems to climb.	Clutch slipping. Internal clutch malfunction.	Replace clutch.
	Tach drive O-rings (belts) slipping	Clean or replace belts.
	Worn upper or lower belt pulley grooves	Replace pulley.
	Hard bend or pressure on the clutch cable by adjacent components.	Check cable routing for condition and adjust routing and/or secure as required.
Clutch end play exceeding .050 inch.	Internal wear of clutch.	Replace clutch.
Excessive noise on run-down.	Internal wear.	Replace clutch.
Upper pulley TIR exceeding .009 inch. Check while holding pulley stationary and rotating gearbox with clutch disengaged.	Clutch faces worn from loss of pinion nut torque.	Replace clutch.
	NOTE: If excessive TIR still exists after replacing clutch, the problem could be internal wear in main rotor gearbox. Gearbox should be returned to factory or authorized overhaul facility for inspection.	
	Remove upper pulley assembly inspect the condition of the bearing adapter and clutch inner race	Contact Customer Support if galling is evident.

B. Servicing and Inspection – Clutch

CAUTION: Before servicing, determine the type of oil previously used. if unable to determine, It is recommended that the clutch be drained, purged with kerosene and then serviced per instructions. Clutches leaving the factory have been serviced with Aeroshell 560 turbine oil. See Table 4-1 for other approved oil.

(1) Refer to Para. 4-10 for servicing the overrunning clutch.

(2) Overrunning Clutch – Inspection

NOTE: A significant portion of fluid can be lost very quickly through a leaking seal. The clutch area should be looked at frequently to determine if any leaks exist.

(a) Monitor oil level (Para. 4-10).

(b) If clutch has been subjected to rapid or instantaneous rotor engagements or loss of oil is suspected, follow steps below:

UNCONTROLLED COPY WHEN DOWNLOADED OR PRINTED

Visit www.enstromhelicopter.com for instructions to order an original manual and to register for email notification of updates.

(1) Rotate the upper pulley in reverse direction by hand to check for roughness or noise. If abnormality is detected, unit should be replaced.

(2) Maximum clutch axial play is .050 inch.

(3) If clutch is serviceable but has a leaking seal, contact Enstrom Helicopter Customer Service.

(4) Service clutch (Para. 4-10).

(5) Ground run helicopter until normal operating temperatures are reached.

(6) Increase power until the tachometer shows 350 rotor rpm. Split needles and allow rotor RPM to drop to 200. Re-engage normally and repeat a minimum of three times, observing clutch response.

(7) If all functions are normal, inspect for leakage and proper oil level before returning helicopter to service.

C. Removal – Clutch and Upper Pulley

NOTE: While the belt can be changed with only deflecting the TR drive shaft, removal of the jack strut support bearing and the upper pulley assembly require removing the TR driveshaft to prevent bowing or bending the shaft. However, removal of the tail rotor drive shaft is not necessary if the bolts are removed from the first 3 pillow blocks (after marking position of the pillow blocks) and move shaft out of the way.

(1) Remove cowling.

(2) Remove jackstrut and pulley assembly (Para. 11-4.A).

(3) Remove the hardware connecting the drive shaft flex plates from the forward and aft transmission couplings.

(4) Separate coupling halves on forward end of drive shaft.

(a) Flex Couplings – Remove the two bolts connecting forward coupling hub (4) to flex element (3) (Fig. 11-9). Remove forward taper pin from coupling hub (4) and pinion. Remove coupling hub.

(5) Remove tach drive cover and O-rings.

NOTE: The F-28F models may be equipped with a strobe mounted over the drive shaft. Remove the strobe mount, if installed.

NOTE: Use extreme care to avoid causing a bend or bow in the driveshaft. Do not allow it to bend or bow when carrying it.

NOTE: Mark the pillow block location for ease of installation.

(6) Remove the drive shaft assembly from the helicopter and store it so that it is not bowed.

UNCONTROLLED COPY WHEN DOWNLOADED OR PRINTED

Visit www.enstromhelicopter.com for instructions to order an original manual and to register for email notification of updates.

(8) Remove the drive belt (Para. 11-5.C).

(9) Remove nut (1) using an impact wrench to break the torque.

(10) Install tool T-0114 in the end of the pinion.

(11) Install a two-jaw puller with jaws attaching behind face of bearing housing (8) and adjustable shaft located in end of tool T-0114 (Fig. 11-11.a). Hold jaws together with "C" clamp.

(12) Pull the bearing housing (8) from the pinion.

(11) Slide clutch (11) and pulley assembly (12) off pinion.

NOTE: Refer to Para. 11-6.C.(2), for pinion seal replacement procedures.

NOTE: If the clutch (11) will not slide off, install tool T-0114 back in the aft of the pinion. Place the jaws of the puller in the groove of the clutch (11) (Fig. 11-11.b). Clamp in place and pull clutch (11) and pulley assembly (12) from pinion.

(12) Remove key (14) from pinion. If the key was shimmed on assembly, save shim.

D. Disassembly – Clutch and Pulley

NOTE: Refer to Fig. 11-10 for numbered items.

(1) Clutch and Pulley – Disassembly

(a) Remove nuts (13) from bolts (9).

(b) Remove bolts (9) and washers (10).

NOTE: Remove one of the servicing bolts in the clutch to allow clutch oil to seep from hole. Heat expansion causing internal pressure could cause damage to seal if bolt is not removed. Allow clutch and pulley to cool before servicing.

(c) Heat pulley (12) to approximately 250°F/121°C and remove clutch (11).

(d) Clean and inspect components.

E. Cleaning – Clutch and Pulley

(1) Clutch – If clutch is determined serviceable, wash O.D. with kerosene, toluol or equivalent cleaning solvent. Avoid using excessive solvent in seal area. DO NOT vapor degrease clutch as damage could result to seal.

F. Inspection – Clutch and Pulley

(1) See Table 11-2 for detailed inspection requirements of the clutch and pulley assembly.

G. Assembly – Clutch and Pulley

NOTE: Refer to Fig. 11-10 for numbered items.

UNCONTROLLED COPY WHEN DOWNLOADED OR PRINTED

Visit www.enstromhelicopter.com for instructions to order an original manual and to register for email notification of updates.

NOTE: Remove one of the servicing bolts in the clutch to allow clutch oil to seep from hole. Heat expansion causing internal pressure could cause damage to seal if bolt is not removed. Allow clutch and pulley to cool before servicing.

(1) Heat pulley (12) to approximately 250°F/121°C.

(2) Apply grease (MIL-PRF-81322) to the bore of the pulley. Using two bolts (9) for alignment, drop clutch (11) into pulley (12).

(3) Install servicing bolt back into clutch and service clutch (Para. 4-10).

(4) Install bolts (9) through washers (10) and through clutch (11) and pulley (12).

(5) Install washers (10) and nuts (13) on bolts.

(6) Torque nuts (13) (60-85 in-lb/6.8-9.6 Nm), alternating sides during torque process.

(7) Service clutch (Para. 4-10).

H. Installation – Clutch and Pulley

NOTE: Refer to Fig. 11-10 for numbered items.

(1) Before installing key (14) into pinion, check to see that the key slides freely through the keyway in the clutch. If it does not slide through, the key must be filed slightly on one side to allow proper fit. A clearance of 0.0005 inch to 0.001 inch between key and clutch keyway is required. If the key is loose in the pinion keyway, proceed to (a) through (e) below.

(a) Install key (14) in pinion and using a feeler gauge, measure the gap between the side of the key and the pinion keyway.

(b) Divide the measurement in half to get the thickness of the stainless steel shim stock required.

(c) Cut a shim 2 in/51 mm long and 1 1/4 in/32 mm wide.

(d) Wrap the shim around the key and, with the chamfered side of the key down, tap the key and shim into the pinion keyway.

(e) Using a razor knife, trim the shim stock along the sides of key flush with the pinion. The key must be secure in the pinion.

NOTE: Do not allow grease to contaminate the races between the MRGB and the clutch, and the clutch and upper jackstrut bearing. Remove any grease from the forward side of the bearing housing assembly (7).

(2) Apply grease (MIL-PRF-81322) to the bore of the clutch (11) and slide clutch and pulley assembly (12) on the pinion.

(3) Heat (if necessary) the inner race of upper jackstrut bearing (6) and slide the bearing housing assembly (8) on the pinion until it is flush against clutch (11).

UNCONTROLLED COPY WHEN DOWNLOADED OR PRINTED

Visit www.enstromhelicopter.com for instructions to order an original manual and to register for email notification of updates.

(4) Install tool T-0133-1 (Fig. 11-12). The long arm on this tool slides into forward end of pulley and the short arm hooks under the idler arm mount to hold pinion from rotating when applying torque to pinion nut (1). Include a shim on T-0133-1 to avoid damaging the gearbox flange.

(5) Install nut (1) on pinion and torque (250 ft-lb/339.0 Nm) using tool T-0135.

NOTE: The nut should be rechecked after 25 hours of service and at 100 hour intervals thereafter.

(6) Install the drive belt over the upper pulley (12).

(7) Reinstall the tail rotor driveshaft but do not torque mounting bolts.

(8) Slip tach drive O-rings over driveshaft.

(9) Connect coupling halves:

(a) Flex Coupling

1 Install the coupling hub into the pinion and install taper pin. Taper pins must be tapped into place and secured with nut (not seated in place by the nut). Install washer, and nut and torque (25 in-lb/2.8 Nm).

2 Align the forward and aft coupling hub with the flex element (Fig. 11-9). With the curved side of the flex coupling washers (2) against the flex element, install the mounting hardware (bolts (5) and nuts (7)) and torque (50-70 in-lb/5.6-7.9 Nm).

NOTE: Washers (6) may be used between flex coupling washers (2) and coupling hubs to align and center the flex elements.

(10) Return the forward tail rotor drive shaft pillow blocks to the original position and install bolts. Use the same shims as originally installed under the block.

(11) Safety the nut (1) to the coupling taper pin (MS20995C40).

(12) Install O-rings over pulleys and install tach drive cover.

(13) Install jackstrut assembly (Para. 11-4.F).

(14) Check clutch control rigging (Para. 11-1.A).

(15) Service the upper jackstrut bearing (Para. 4-36).

(16) Inspect entire drive system.

(17) Track drive belt (Para. 11-5.B).

(18) Perform a final inspection of the entire drive system.

(19) Replace cowling.

UNCONTROLLED COPY WHEN DOWNLOADED OR PRINTED

Visit www.enstromhelicopter.com for instructions to order an original manual and to register for email notification of updates.

11-7.1 UPPER JACKSTRUT BEARING

A. Removal – Upper Jackstrut Bearing

NOTE: Refer to Fig. 11-10 for numbered items.

(1) Remove housing and bearing assembly (Para. 11-7.C).

(2) Remove retaining ring (3).

(2) Remove seal retainer (4) and seal (5) from bearing housing (8).

(3) Heat bearing housing (8) to 250°F/121°C and gently tap bearing (6) with bearing adapter (2) from the housing.

(4) Remove shield (7) from housing (8).

(5) Press bearing adapter (2) from bearing (6).

(6) Clean (Para. 11-7.1.B) and inspect bearing housing, shield, and seal (Para. 11-7.1.C).

B. Cleaning – Upper Jackstrut Bearing

(1) Upper Jackstrut Bearing – Carefully remove seal from the bearing. Wash and flush old grease from bearing using fresh cleaning solvent, kerosene, toluol or vapor degrease. Apply a light oil (10W) to bearing and spin bearing by hand to determine if it is serviceable. The bearing should rotate smooth with no ratchety feeling. See Table 4-1 for required intervals and grease to repack bearing.

C. Inspection – Upper Jackstrut Bearing

(1) See Table 11-2 for detailed inspection requirements of the clutch and pulley assembly.

D. Installation – Upper Jackstrut Bearing

(1) Lubricate (MIL-PRF-81322) the inside of the bearing housing.

(2) Install shield (7) into bearing housing (8) and center the shield as closely as possible to the inside of the housing.

(3) Lubricate (MIL-PRF-81322) the bore of bearing housing (8) and the O.D. of bearing (6).

(4) Remove the aft side seal from the replacement bearing and pack bearing (6) with grease (MIL-PRF-81322). Do not reinstall the shield that was removed in this step.

WARNING: USE EXTREME CAUTION WHEN HANDLING HEATED PARTS TO PREVENT FROM INJURING PERSONNEL. USE PROTECTIVE GLOVES WHEN HANDLING HEATED PARTS.

(5) Heat bearing housing (8) to approximately 250°F/121°C.

(6) Install bearing (6) into bearing housing (8) with the open side of the bearing facing aft.

(7) If required, press seal (5) into seal retainer (4).

UNCONTROLLED COPY WHEN DOWNLOADED OR PRINTED

Visit www.enstromhelicopter.com for instructions to order an original manual and to register for email notification of updates.

(8) Apply a light coat of grease (MIL-PRF-81322) on the lip side of seal retainer (4) and install with seal (5) facing the open side of bearing (6) (forward).

NOTE: Do not use a threadlocker on the inside diameter of bearing adapter or on the threads of pinion retention nut. If threadlocker is used on the outside diameter of the bearing adapter to improve fit into the bearing, ensure the bearing adapter is fully seated into bearing. Any excess residue must be removed prior to curing to preclude improper clamp up of the final assembly stack upon torquing the pinion nut.

(9) Press bearing adapter (2) into the aft side of bearing (6).

(10) Install retaining ring (3) into bearing housing (8).

(11) Install bearing housing assembly (Para. 11-7.H.(3) to end).

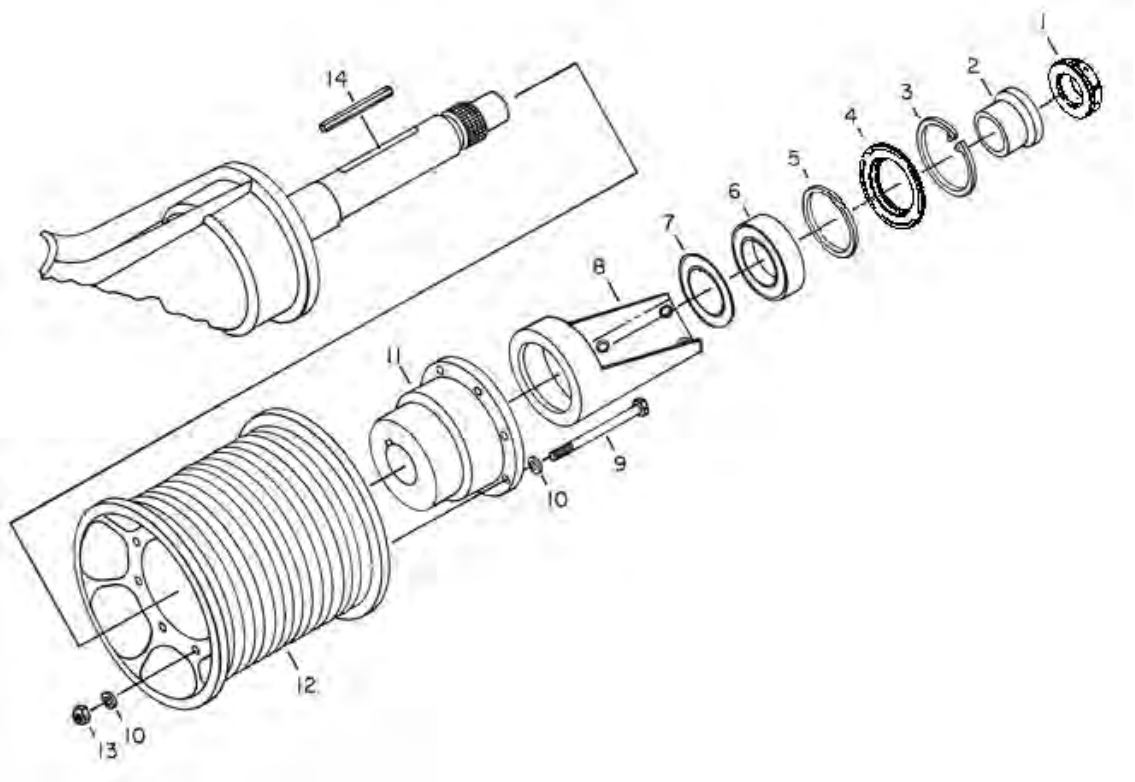

1.	Pinion Retention Nut	8.	Bearing Housing
2.	Bearing Adapter	9.	Bolt
3.	Retaining Ring	10.	Washer
4.	Seal Retainer	11.	Clutch
5.	Seal	12.	Driven Pulley (Upper)
6.	Bearing	13.	Nut
7.	Shield	14.	Key

Figure 11-10. Clutch and Upper Pulley Assembly

UNCONTROLLED COPY WHEN DOWNLOADED OR PRINTED

Visit www.enstromhelicopter.com for instructions to order an original manual and to register for email notification of updates.

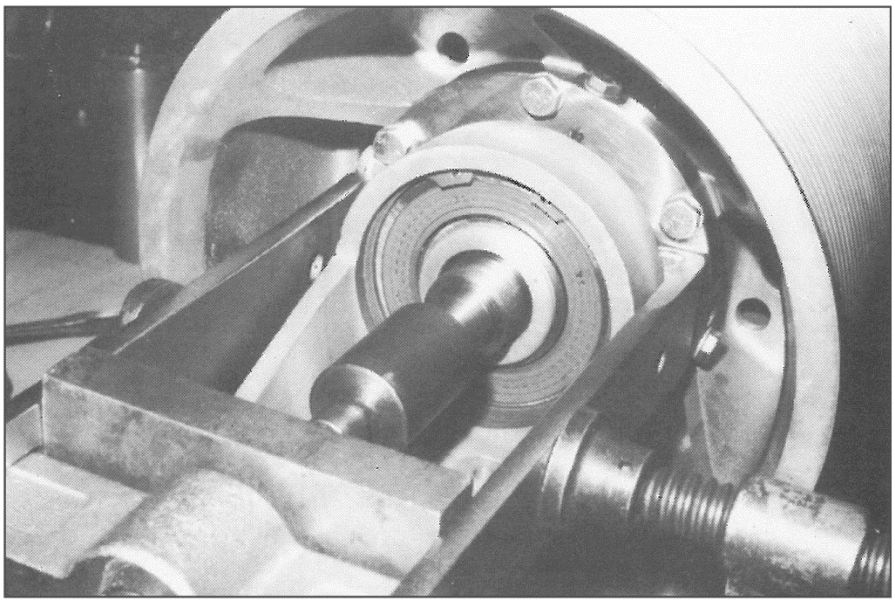

a. Upper Jackstrut Bearing Housing Removal

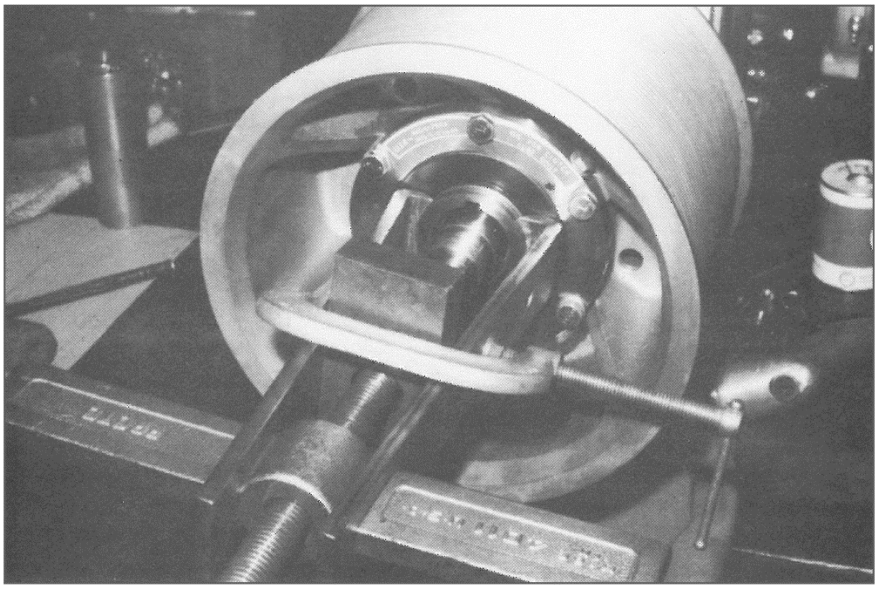

b. Clutch and Upper Pulley Removal

Figure 11-11

UNCONTROLLED COPY WHEN DOWNLOADED OR PRINTED

Visit www.enstromhelicopter.com for instructions to order an original manual and to register for email notification of updates.

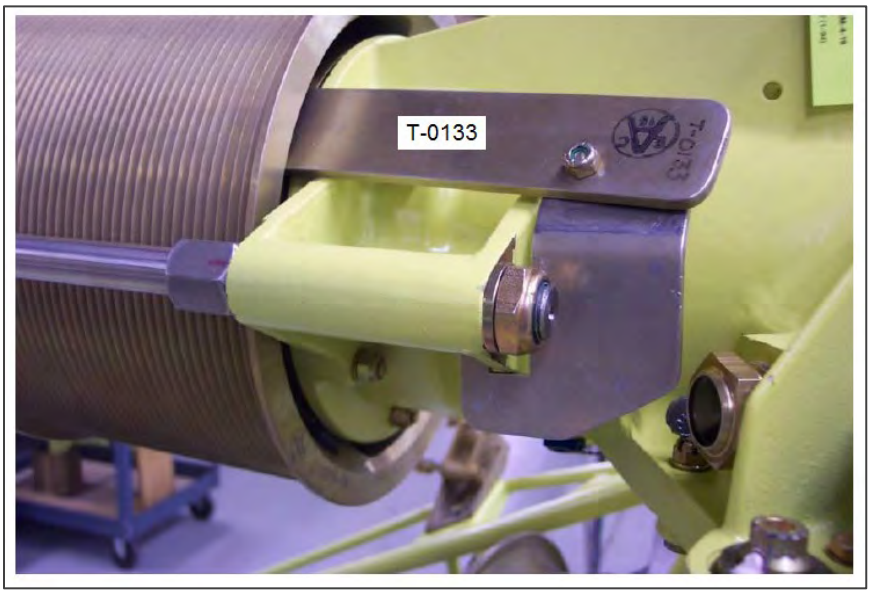

Figure 11-12. Upper Pulley Installation

UNCONTROLLED COPY WHEN DOWNLOADED OR PRINTED

Visit www.enstromhelicopter.com for instructions to order an original manual and to register for email notification of updates.

Table 11-2. Inspection Requirements – Clutch and Upper Pulley Assembly

Part Number	Fig. 11-10 Item Number	Part Name	Inspection*	Serviceable Limits*	Repair Limits*	Repair or Action
28-13184-11	1	Retention Nut	Threads (no rolled or missing threads)	None Allowed	Not Repairable	Replace Nut
			Cracks	None Allowed	Not Repairable	Replace Nut
28-13323-11 28-13129-13	2	Bearing Adapter	(28-13323-11) O.D. 1.5746 to 1.5749	-.0002	Not Repairable	Replace Adapter
			(28-13323-11) I.D. 1.3116 to 1.3118	+.0002	Not Repairable	Replace Adapter
			(28-13129-13) O.D. 1.5740 to 1.5745	-.0005	Not Repairable	Replace Adapter
			(28-13129-13) I.D. 1.3110 to 1.3125	+.0005	Not Repairable	Replace Adapter
			Fretting wear on end surfaces	None Allowed	Not Repairable	Replace Adapter
ECD014-11 ECD014-13	6	Bearing	Roughness, spalling, pits, or corrosion	None Allowed	Not Repairable	Replace Bearing
28-13215-1, -3	8	Bearing Housing	I.D. 3.5428 to 3.5434	+.001	Not Repairable	Replace Housing
			Cracks	None Allowed	Not Repairable	Replace Housing
			Nickes, scratches, or corrosion	.030 deep	≤ .030 deep	Blend out smooth
28-13401-2, -4	11	Clutch	O.D. 4.2490 to 4.2500	-.0002	Not Repairable	Replace Clutch
			Bore dia. 1.5630 to 1.5640	+.0003	Not Repairable	Replace Clutch
			Inner race axial play (end play)	.050	Not Repairable	Replace Clutch

(continued next page)

UNCONTROLLED COPY WHEN DOWNLOADED OR PRINTED

Visit www.enstromhelicopter.com for instructions to order an original manual and to register for email notification of updates.

Table 11-2. Inspection Requirements – Clutch and Upper Pulley Assembly

Part Number	Fig. 11-10 Item Number	Part Name	Inspection*	Serviceable Limits*	Repair Limits*	Repair or Action
28-13401-2, -4	11	Clutch	(continued from previous page)			
			Inner race faces perpendicular to bore	.0005 TIR	Can be faced	Contact Enstrom
			Inner race rotation to be smooth with no noise or roughness	None Allowed	Can be rebuilt	Return to Enstrom Factory for Evaluation
			Seal – leakage	None Allowed	None Allowed	Replace Seal
			Oil level			Service (Para. 4-10)
28-13271	12	Pulley	Bore dia. 4.2490 to 4.2495	+.0003	Not Repairable	Replace Pulley
			Cracks	None Allowed	Not Repairable	Replace Pulley
			Concentricity	.001 TIR	Not Repairable	Replace Pulley
			Depth of grooves	≤ .176	Not Repairable	Replace Pulley
			Nicks and gouges in belt grooves	None Allowed	≤ .25 long and ≤ .025 deep	Blend out smooth
28-13142	14	Key	Width .3105 to .3125	-.001	Not Repairable	Replace Key
			No visible wear on side of key	None Allowed	Not Repairable	Replace Key
SLW 3045	15	Locking Ring	Locking tabs not bent or broken	None Allowed	Not Repairable	Replace Locking Ring
SLN 3045	16	Nut	Threads (no rolled or missing threads)	None Allowed	Not Repairable	Replace Nut
			Tightening tabs (not rounded or bent)	None Allowed	Not Repairable	Replace Nut
			Cracks	None Allowed	Not Repairable	Replace Nut

* All dimensions are in inches.

UNCONTROLLED COPY WHEN DOWNLOADED OR PRINTED

Visit www.enstromhelicopter.com for instructions to order an original manual and to register for email notification of updates.

11-8 IDLER PULLEY ASSEMBLY

A. Troubleshooting – Idler Pulley Assembly

Problem	Possible Cause	Action
End play in roller assembly.	Worn bearings.	Replace bearings.
Excessive belt vibration at low power settings.	Improperly adjusted belt roller.	Adjust roller to a 0.38 inch/9.5 mm gap between belt and roller with clutch engaged.
Play in idler actuator arm.	Worn oilite bushings.	Replace bushings.
Play in over-center bellcrank.	Worn oilite bushings in bellcrank.	Replace bushings.
	Worn rod end.	Replace rod end.
Idler pulley rotates by hand.	Ratchety idler bearings.	Replace bearings.
Over-center bellcrank not parallel to shaft with clutch engaged.	Improper rigging.	Check rigging (Para. 11-1.B).

B. Removal – Idler Pulley

NOTE: Refer to Fig. 11-16 for numbered items unless stated otherwise.

(1) Remove baggage compartment top and side cowling. Remove baggage box.

(2) Remove bolts (24) to disconnect the actuator arm assemblies (10) from the pulley yoke assembly (Fig. 11-14).

(3) Remove bolt (50) and washer (51) to disconnect the idler stabilizer strut (49) from the brace assembly (57).

(4) Loosen nut (48) to allow the idler stabilizer strut (49) to pivot.

(5) Remove nut (63) and washer (64).

(6) Push the belt away from the idler pulley (7) and remove the idler pulley assembly with attached stabilizer strut (49) and shaft (62) from the transmission housing.

C. Disassembly – Idler Pulley

NOTE: Refer to Fig. 11-13 for numbered items unless stated otherwise.

(1) Remove cotter pin and nut (6) from shaft (1).

(2) Remove spacer (5) from shaft.

(3) Remove snap rings (2) from yoke (8).

UNCONTROLLED COPY WHEN DOWNLOADED OR PRINTED

Visit www.enstromhelicopter.com for instructions to order an original manual and to register for email notification of updates.

(4) Install tool T-0029B against bearing (3) with head of shaft (1) inside the tool.

(5) Place the pulley assembly (7) in an arbor press and using tool T-0029B-1 against threaded end of shaft (1), press the shaft through the bearings (3) and the pulley. Remove the shaft.

NOTE: Hold tool T-0029B-1 in bearings and pulley to keep pulley from falling out of yoke.

(6) Place assembly on bench and remove tool T-0029B-1. Remove pulley (7) and spacers (4).

(7) Heat pulley yoke (8) to approximately 250°F/121°C and gently tap bearings (3) out.

(8) Carefully remove seals from both sides of the bearings (3).

(9) Clean idler pulley components (Para. 11-8.D).

D. Cleaning – Idler Pulley

(1) Idler Pulley Bearings: Wash and flush old grease from the bearing using fresh cleaning solvent, kerosene, toluol or vapor degrease. Apply a light oil (10-W) to bearing and spin the bearing by hand to determine if it is serviceable. The bearing should rotate smooth with no ratchety feeling. See Table 4-1 for required intervals and grease to repack bearing. Install seals.

E. Inspection – Idler Pulley Assembly

(1) See Table 11-3 for detailed inspection requirements.

F. Assembly – Idler Pulley

NOTE: Refer to Fig. 11-13 for numbered items unless stated otherwise.

(1) Spray bearing bores of yoke (8) and O.D. of bearings (3) with activator (Loctite primer 7649 or equivalent).

(2) Heat bearing area of yoke (8) to approximately 250°F/121°C. Apply a small amount of Loctite 277 to O.D. of bearing (3) and install into yoke (8). Repeat on the opposite bearing.

NOTE: T-0029A-1 can be used if the bearings (3) require pressing into the yoke (8).

(3) Place spacers (4) and pulley (7) in yoke.

NOTE: The small end of the spacer faces against bearings (3).

(4) Install tool T-0029B-1 through bearings (3), spacers (4) and pulley (7).

(5) Place tool T-0029A-1 against aft bearing (3) and install in a press while holding tool T-0029B-1 and pulley in place.

NOTE: Tool T-0029B-1 is used for alignment and will be pressed out while pressing shaft (1) in.

UNCONTROLLED COPY WHEN DOWNLOADED OR PRINTED

Visit www.enstromhelicopter.com for instructions to order an original manual and to register for email notification of updates.

(6) Apply grease (MIL-PRF-81322) to the bearing surface of shaft (1) and carefully press through bearings and pulley.

NOTE: Shaft (1) should be installed with threaded end facing aft when installed on helicopter.

(7) Remove from the press and install retaining rings (2) in the bearing bores.

(8) Install spacer (5) on threaded end of shaft (1) with the chamfer facing inboard.

(9) Install nut (6). Torque (24-34 ft-lb/33-46 Nm).

(10) Install cotter pin through the nut (6).

G. Installation – Idler Pulley Assembly

NOTE: Refer to Fig. 11-16 for numbered items unless stated otherwise.

(1) Install spacer (45) on the long end of shaft (62). The chamfered hole of spacer (45) must be installed against the wrench boss of shaft (62).

(2) Install the yoke (8) over shaft (62) and against the spacer (45).

NOTE: It may be necessary to rotate the pulley rotating shaft as the shaft is inserted into the transmission so the idler yoke will clear the idler support strut.

(3) Insert yoke (8) and shaft (62) into the transmission boss. It may be necessary to rotate the shaft to facilitate installation.

(4) Install the idler stabilizer strut (49) to the brace assembly with bolt (50) and washer (51).

NOTE: It is recommended to torque all hardware installations. If required, loosen and re-torque as required during the tracking process.

(5) Install washer (64) and nut (63). Torque (50-65 ft-lb/68-88 Nm).

(6) Tighten nut (48). Torque (24-34 ft-lb/33-46 Nm).

(7) Connect actuator arm assemblies (10) to pulley yoke (8) with bolts (24), washers (25), and nuts (27) (Fig. 11-14). Torque 30-40 in-lb/3.4-4.5 Nm.

NOTE: Head of bolt and washer are installed from the inboard side of actuator arm assembly. Place washer (25) and nut (27) on outboard end of the bolt (24).

(8) Install cotter pins (28) (Fig. 11-14).

UNCONTROLLED COPY WHEN DOWNLOADED OR PRINTED

Visit www.enstromhelicopter.com for instructions to order an original manual and to register for email notification of updates.

11-8.1 YOKE END ASSEMBLY

A. Removal – Yoke End Assembly

(1) Remove the idler pulley assembly (Para. 11-8.B).

(2) Remove bolt (41) and hardware to disconnect rod end (38) from the over-center bellcrank (Fig. 11-14).

(3) Remove bolts (19) (20) and hardware to disconnect the actuator arm assemblies (10) from the yoke end (15).

B. Disassembly – Yoke End Assembly

(1) Remove shaft (18), nut (17) and washer (16) from yoke end (15) (Fig. 11-14).

(2) If rod end bearing assembly (38) needs replacing, cut safety wire and break torque on nut (37).

(3) Carefully back out the jam nut (37) and withdraw the lock key (36) from the shaft (18).

(4) Remove the rod end bearing assembly (38).

C. Inspection – Yoke End Assembly

(1) See Table 11-4, Table 11-5, and Table 11-6 for detailed inspection requirements.

(2) Inspect idler yoke S/N 14-001-06 to 14-077-06 per SDB 109, latest revision.

NOTE: Unless initially complied with and documented in maintenance records, SDB 0118, latest revision, is still in effect.

D. Assembly – Yoke End

(1) Install the rod end bearing assembly (38) (Fig. 11-14).

NOTE: The rod end bearing assembly (38) may have been previously treated with ACF-50 or MIL-PRF-23377 Type I Class 2C or Class N epoxy primer corrosion inhibitor per SDB 0127. If continuing use of ACF-50, removal of prior ACF-50 application is unnecessary. If changing from ACF-50 to epoxy primer, ACF-50 residue must be removed before reinstallation.

NOTE: For helicopters S/N 833 (F-28F) and subsequent and S/N 2157 (280FX) and subsequent, the rod ends are treated with epoxy primer at the time of manufacture.

(a) For new epoxy primer application, remove any ACF-50 residue from the threads of the rod end and the interior threads of the piston with a suitable solvent.

(b) If applying a touch-up of epoxy primer, remove any loose epoxy primer residue from the threads of the rod end and the interior threads of the piston with a brush and a small amount of solvent.

UNCONTROLLED COPY WHEN DOWNLOADED OR PRINTED

Visit www.enstromhelicopter.com for instructions to order an original manual and to register for email notification of updates.

CAUTION: Do not allow the epoxy primer to dry prior to assembly of the rod end.

CAUTION: Mask the bearing area prior to applying epoxy primer to avoid damaging the bearing.

NOTE: Follow the manufacturer's instructions for corrosion inhibitor application.

(c) Apply a coat of corrosion inhibitor to the top 0.50 in/13 mm of threads of the bearing (closest to the uni-ball bearing).

NOTE: Installing the nut will tend to wipe away corrosion inhibitor that was freshly applied. Re-apply to ensure complete coverage.

(d) Install the lock pin (36) and the jam nut (37) and position as close as possible to the uni-ball bearing.

(e) Apply corrosion inhibitor to the remaining threads below the jam nut (37).

(f) Install rod end bearing assembly (38) into shaft (18).

(2) Turn the rod end bearing assembly (38) into the shaft until the measurement from the end of the shaft to centerline of the rod end ball is 6.75 inches.

(3) Torque (300 in-lb/34 Nm) jam nut and safety wire the locking key (36) to the jam nut (37).

(4) Re-apply corrosion inhibitor to the threads above the jam nut (37), as required.

(5) Install nut (17) and washer (16) on shaft (18) (Fig. 11-14).

(6) Apply lubrication (MIL-G-25537 or MIL-PRF-81322) to the threads of the shaft (18) and turn into yoke (15) until approximately 1/2 inch of the threads extend beyond the jam nut.

(7) Torque nut (17) (40-45 ft-lbs/4.5-5.1 Nm).

E. Installation – Yoke End Assembly

(1) Place yoke end (15) between actuator arm assemblies (10) and install mount bolts (19) and (20) and washers (21) and (22), and nuts (23). Torque (12-15 in-lb/1.4-1.7 Nm) (Fig. 11-14).

(2) Install spacer (40) in rod end bearing assembly (38) and place spacers (39) on each side of the rod end (Fig. 11-14).

(3) Insert rod end (38) with spacers (39) into over-center bellcrank and install bolt (41), washers (42) and nut (43), and partially tighten. Torque (30-40 in-lb/3.4-4.5 Nm) and install cotter pin (44) after belt tension is rigged.

(4) Install the idler pulley assembly (Para. 11-8.G).

(5) Verify belt clutch adjustment (Para 11-1.A).

UNCONTROLLED COPY WHEN DOWNLOADED OR PRINTED

Visit www.enstromhelicopter.com for instructions to order an original manual and to register for email notification of updates.

11-8.2 ACTUATOR ARM ASSEMBLY AND SNUBBER ROLLER ASSEMBLY

A. Removal – Snubber Roller

NOTE: It is not necessary to remove the forward actuator arm assembly if only removing the "snubber" roller.

NOTE: Refer to Fig. 11-14 for numbered items.

(1) Remove the yoke end assembly (Para. 11-8.1.A).

NOTE: If the belt roller assemblies are installed in the helicopter, it is only necessary to remove the aft strap assembly (10) to remove the snubber roller

(2) Disconnect actuator arm assemblies (10) from yoke end (15) and from the pulley yoke (8) by removing bolts (19), (20), and (24). Remove spacers (9), washers (21) and (25), and nuts (27).

(3) Remove nuts (14) and washers (13) to remove roller assembly (11) from the actuator arm assemblies. Remove spacers (12).

B. Disassembly – Snubber Roller

(1) Using a plastic mallet, tap end of shaft (33) to remove bearing housing (30) and bearing (31) from one end of roller (Fig. 11-14).

(2) Reinstall shaft (33) in opposite bearing and tap to remove bearing.

(3) Remove shaft (33) and sleeve (32). Save shims (34) located behind bearing for reassembly.

(4) Press bearings (31) from bearing housings (30).

(5) Clean roller assembly components in accordance with Step C.

C. Cleaning – Actuator Arm Assembly and Snubber Roller

(1) Parts should be washed in toluene, kerosene, or an equivalent solvent. They may also be vapor degreased before inspection.

(2) Do not submerge the roller assembly into cleaning solvent as a unit. Clean the outer surfaces of the roller with a cleaning brush and solvent. If the unit is disassembled, clean the bearings in accordance with Step D.

D. Inspection – Actuator Arm Assembly and Snubber Roller

(1) See Table 11-4 and Table 11-5 for detailed inspection requirements.

(2) Inspect the edges of the washer (13) area (inside the groove) on the actuator arm assembly for cracks and inspect the outside edges of the actuator arm above and below the washer (13) area (Fig. 11-15).

(3) Inspect the interior aluminum plate of the actuator arm assembly for damage.

UNCONTROLLED COPY WHEN DOWNLOADED OR PRINTED

Visit www.enstromhelicopter.com for instructions to order an original manual and to register for email notification of updates.

E. Assembly – Snubber Roller

NOTE: Parts identified in steps (1)-(3) are installed with 277 Loctite (red). Use only a small amount.

(1) Apply a small amount of 277 Loctite to bearings (31) and press bearings (31) into end caps (30) (Fig. 11-14).

(2) Apply a small amount of 277 Loctite to one end cap (30) and press one end cap (30) into roller (29).

(3) Apply a small amount of 277 Loctite to sleeve (32) and install sleeve (32) into I.D. of roller (29) and align into end cap (30) assembled in step 2.

NOTE: Parts identified in steps (4)-(5) are installed with Aeroshell 22 (MIL-PRF-81322). Do not use Loctite.

(4) Lubricate (MIL-PRF-81322) and install shaft (33) into roller (29) and bearing (31).

(5) Lubricate (MIL-PRF-81322) and press opposite end cap (30) into roller (29).

(6) While holding roller (29) stationary in vertical position, install dial indicator on end of shaft (33) and move shaft up and down to check end play.

NOTE: Shimming is required to remove end play and preload bearings. Shaft end play measurement plus .002 equals shims required.

Example: End play .022 + .002 = .024 (shims required).

(7) Using a plastic mallet, tap end of shaft (33) to remove bearing (31) from the cap with the (MIL-PRF-81322).

(8) Reinstall shims (34) on bearing surface of shaft (33).

(9) Press bearing (31) into end cap (30).

(10) Rotate shaft (33). The inner race of bearings (31) should rotate with the shaft and no end play should exist.

NOTE: If the inner race of the bearing does not turn with the shaft or if end play still exists, there is not enough preload on the bearings. Install additional shims as required. Recheck assembly.

F. Installation – Actuator Arm Assembly and Snubber Roller

(1) If required, install forward actuator arm assembly (10) (Fig. 11-14).

(a) Install mount bolts (19) and (20) and washers (21) and (22), and nuts (23). Torque (12-15 in-lb/1.4-1.7 Nm).

(b) Safety wire bolt (20) and one of the (19) bolts that attach the forward actuator arm assembly to yoke end (15) with 0.032 wire.

UNCONTROLLED COPY WHEN DOWNLOADED OR PRINTED

Visit www.enstromhelicopter.com for instructions to order an original manual and to register for email notification of updates.

(c) Install bolt (24), washers (25), and nut (27). Torque 30-40 in-lb/3.4-4.5 Nm.

NOTE: Head of bolt and washer are installed from the inboard side of actuator arm assembly. Place washer (25) and nut (27) on outboard end of the bolt (24).

NOTE: Actuator arm assemblies are to be installed with the flange of oilite bushing (26) facing outboard. The roller assembly (11) is installed with grease fitting end of roller facing aft as installed on helicopter.

(2) Install spacers (12) and washers (13) on roller assembly (11).

(3) Install roller assembly (11) onto forward actuator arm assembly (10). Loosely install forward washers (13) and nut (14).

(4) Install aft actuator arm assembly (10) on roller assembly (11) against the inboard washers.

(5) Loosely install outboard washers (13) and nuts (14) on the roller (11).

(6) Install mount bolts (19) and (20) and washers (21) and (22), and nuts (23). Torque (12-15 in-lb/1.4-1.7 Nm).

(7) Safety wire bolt (20) and one of the (19) bolts that attach the forward actuator arm assembly to yoke end (15) with 0.032 wire.

(8) Install spacers (9) into oilite bushings (26) of aft actuator arm assembly (10).

(9) Install bolt (24), washers (25), bushing (9), and nut (27). Torque 30-40 in-lb/3.4-4.5 Nm.

(10) Install cotter pin (28) in actuator arm assembly pivot bolt (24), as applicable.

(11) Adjust snubber roller to 0.38 inch/9.5 mm clearance and parallel to the back side of the belt.

(12) Torque nuts (14) (95-110 in-lb/10.7-12.4 Nm).

(13) Service the roller assembly.

(14) Ground run helicopter and verify snubber roller clearance and parallel to the drive belt.

NOTE: After final adjustment of the idler pulley track, loosen the aft nut on the “snubber” roller and allow the roller to self-align on the idler straps. Torque the aft nut to 95-110 in-lb/10.8-12.5 Nm.

UNCONTROLLED COPY WHEN DOWNLOADED OR PRINTED

Visit www.enstromhelicopter.com for instructions to order an original manual and to register for email notification of updates.

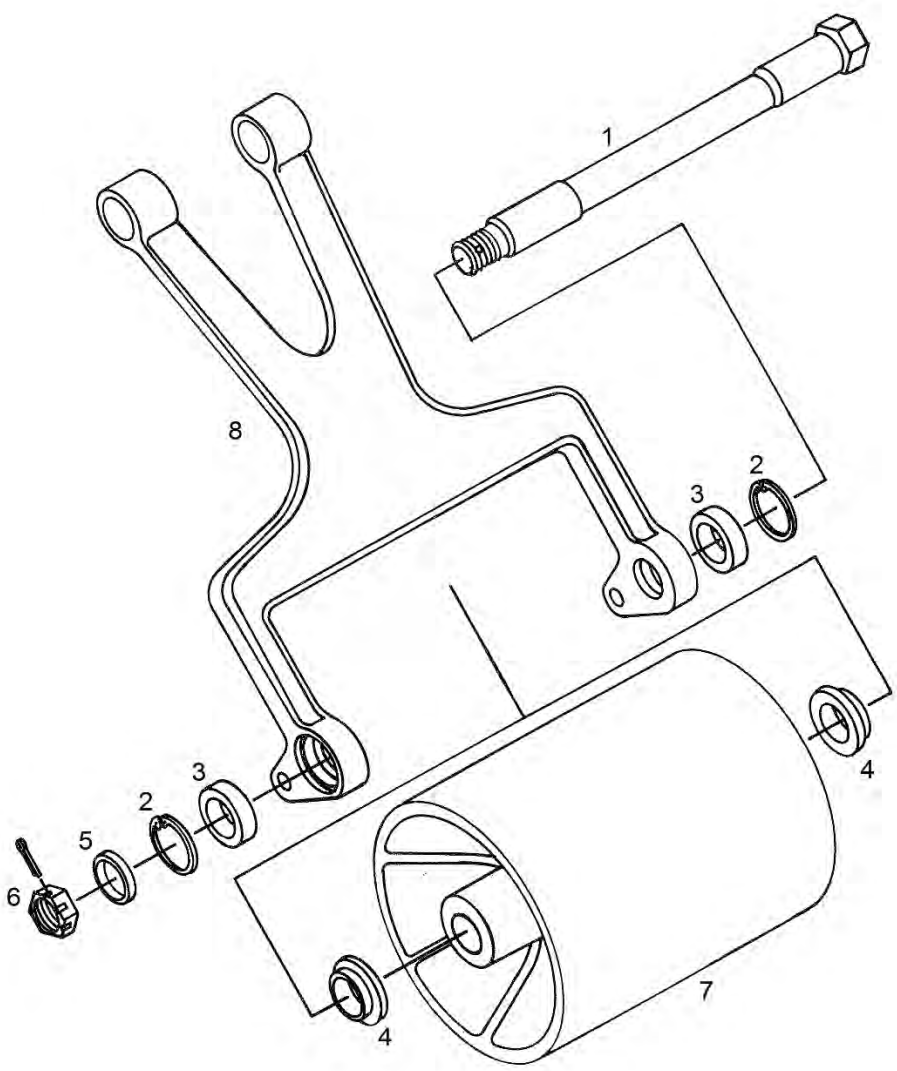

1.	Idler Shaft	5.	Washer
2.	Retaining Ring	6.	Nut
3.	Bearing	7.	Idler
4.	Spacer	8.	Pulley Yoke Assembly

Figure 11-13. Idler Pulley and Pulley Yoke Assembly

UNCONTROLLED COPY WHEN DOWNLOADED OR PRINTED

Visit www.enstromhelicopter.com for instructions to order an original manual and to register for email notification of updates.

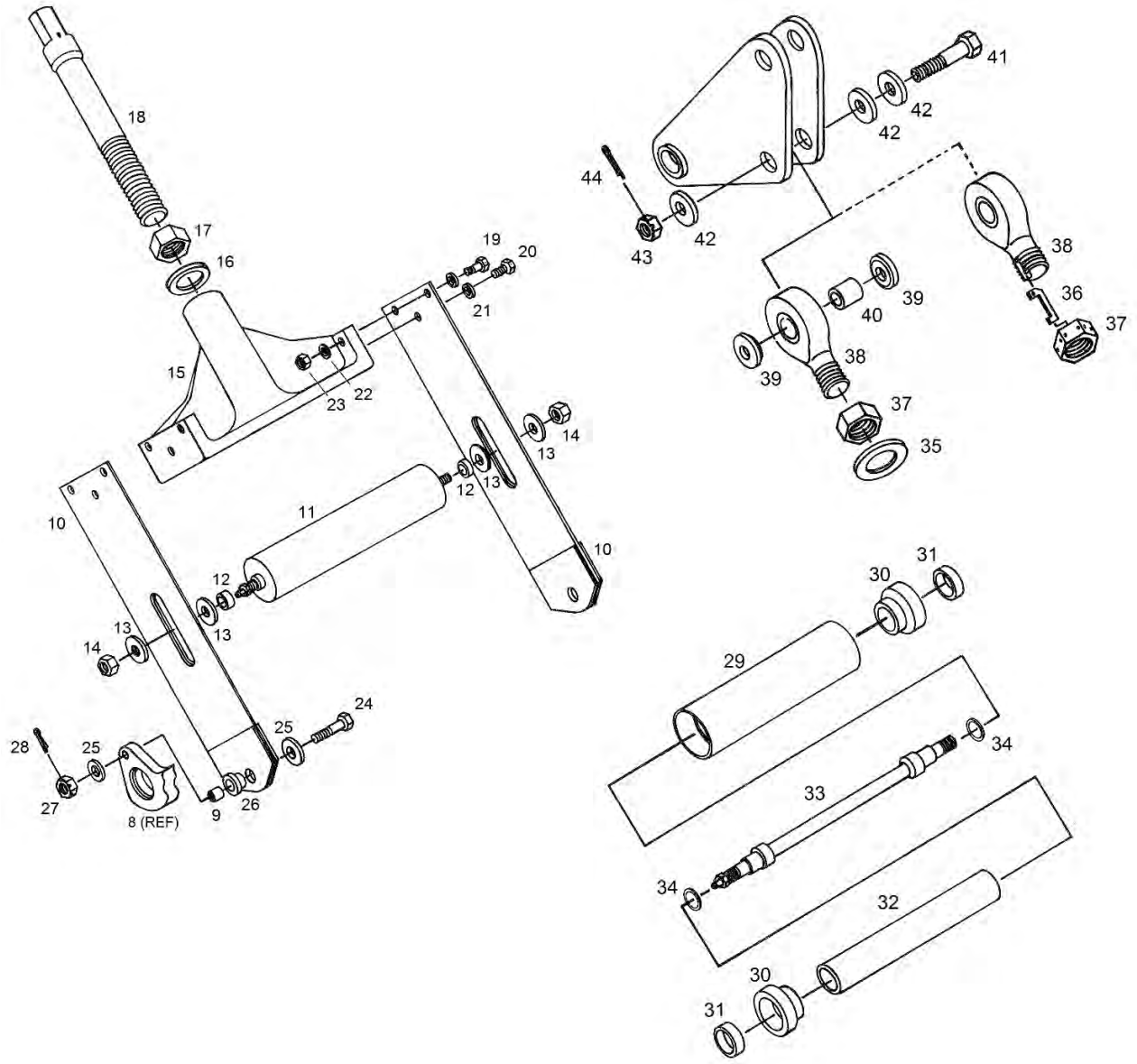

9.	Spacer	21.	Washer	33.	Shaft
10.	Actuator Arm Assembly	22.	Washer	34.	Shim
11.	Roller Assembly	23.	Nut	35.	Lock Washer
12.	Spacer	24.	Bolt	36.	Lock Key
13.	Washer (Harper)	25.	Washer	37.	Nut
14.	Nut	26.	Bushing	38.	Rod End Assembly
15.	Yoke End	27.	Nut	39.	Washer
16.	Washer	28.	Cotter Pin	40.	Spacer
17.	Nut	29.	Roller	41.	Bolt
18.	Shaft Assembly	30.	End Cap	42.	Washer
19.	Bolt	31.	Bearing	43.	Nut
20.	Bolt	32.	Sleeve	44.	Cotter Pin

Figure 11-14. Actuator Arm, Yoke End, and Belt Roller Assemblies

UNCONTROLLED COPY WHEN DOWNLOADED OR PRINTED

Visit www.enstromhelicopter.com for instructions to order an original manual and to register for email notification of updates.

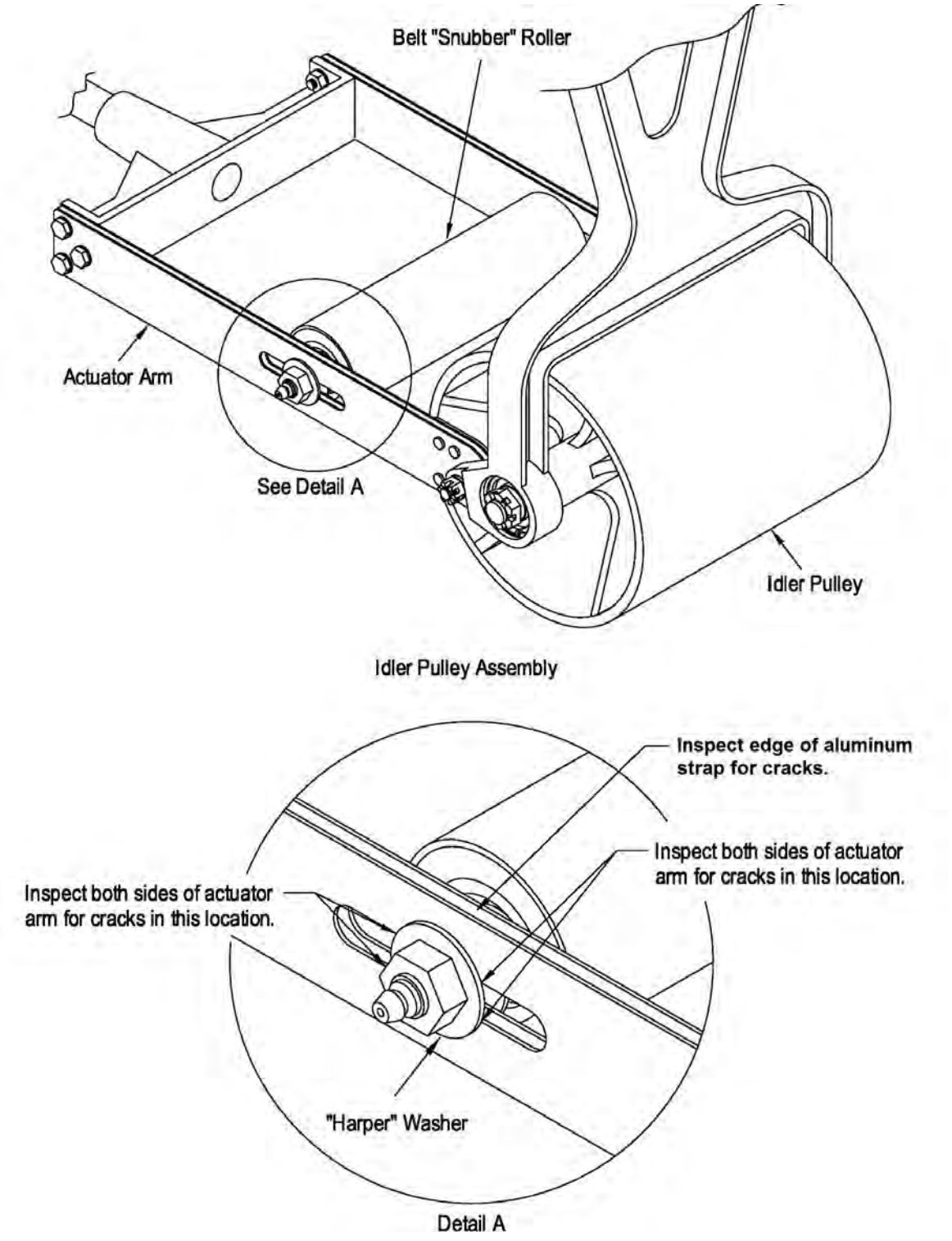

Figure 11-15. Actuator Arm Inspection

Visit www.enstromhelicopter.com for instructions to order an original manual and to register for email notification of updates.

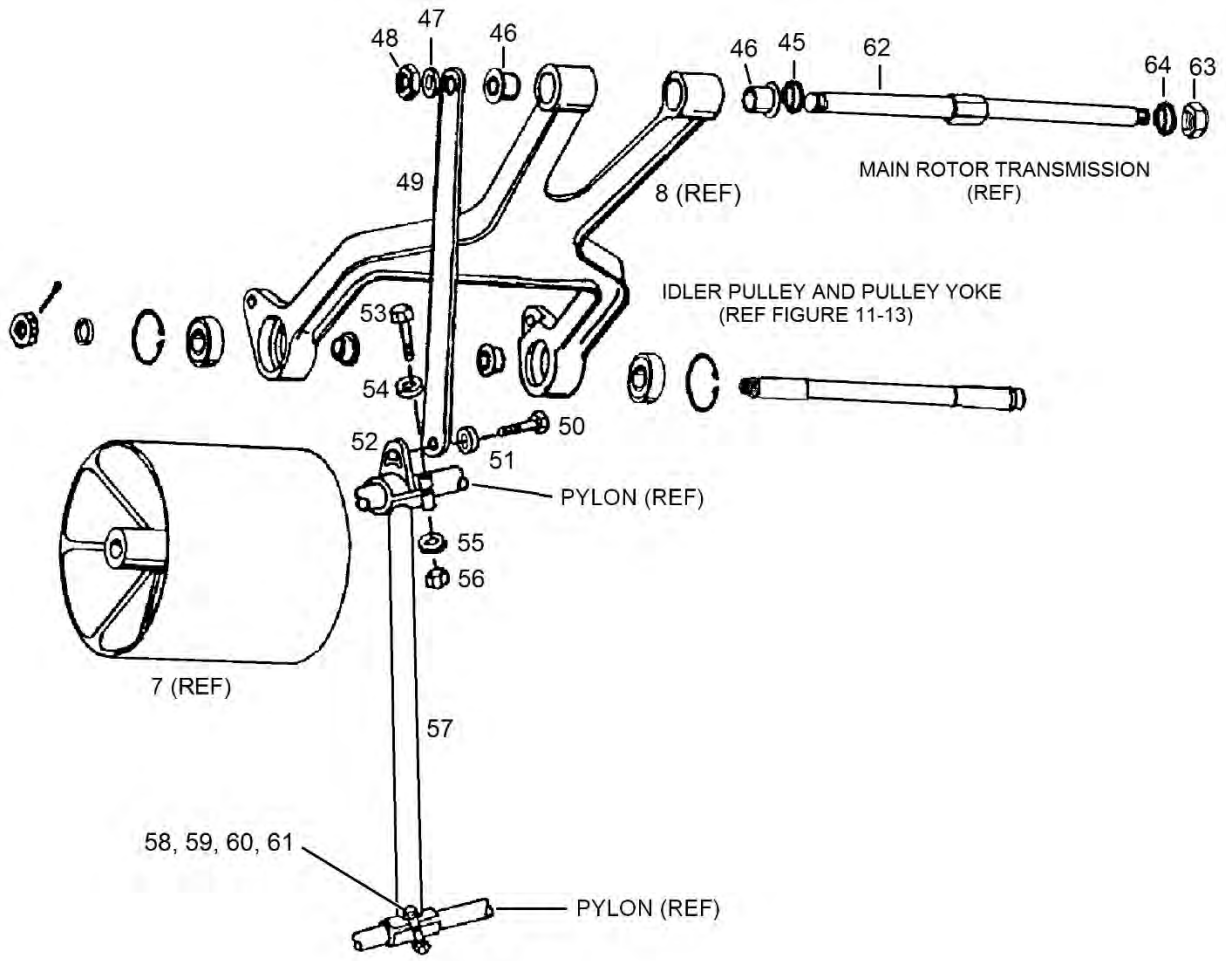

45.	Spacer	54.	Washer
46.	Bearing (Part of Yoke Assembly)	55.	Washer
47.	Washer	56.	Nut
48.	Nut	57.	Brace Assembly
49.	Idler Stabilizer Strut	58.	Bolt
50.	Bolt	59.	Washer
51.	Washer	60.	Washer
52.	Clamp Half	61.	Nut
53.	Bolt	62.	Shaft

Figure 11-16. Idler Pulley and Support Assembly

UNCONTROLLED COPY WHEN DOWNLOADED OR PRINTED

Visit www.enstromhelicopter.com for instructions to order an original manual and to register for email notification of updates.

Table 11-3. Inspection Requirements – Idler Pulley and Yoke Assembly

Part Number	Fig. 11-13 Item Number	Part Name	Inspection*	Serviceable Limits*	Repair Limits*	Repair or Action
28-13230	1	Shaft	Bearing surface dia. .5908 to .5903	-.0002	Not repairable	Replace Shaft
			Concentricity	.001 TIR	Not repairable	Replace Shaft
			Threads (no crossed or rolled threads)	None Allowed	Not repairable	Replace Shaft
N5000-137-S-PP	2	Snap Ring	Visual flatness check	None allowed	Not repairable	Replace Snap Ring
ECD018-11	3	Bearing	Bearing O.D. 1.3780	+.0000/-.0005	Not Repairable	Replace Bearing
			Bearing I.D. .5906	+.0000/-.0003	Not Repairable	Replace Bearing
			Rotate (no ratchety feeling)	None Allowed	Not Repairable	Replace Bearing
			Hours – Limited life bearing 600 hours	None allowed		Replace Bearing
28-13233	4	Spacer	Width .250	±.003	Not Repairable	Replace Spacer
28-13234	5	Washer	Width .125	±.005	Not Repairable	Replace Washer
28-13229	7	Idler Pulley	Shaft bore .5898 to .5908	+.0002	Not Repairable	Replace Pulley
			Shaft bore to O.D. concentricity	.001 TIR	Not Repairable	Replace Pulley
			Belt wear in O.D.	.020 deep	Maximum .040 deep	Replace Pulley
			Cracks	None Allowed	Not Repairable	Replace Pulley

UNCONTROLLED COPY WHEN DOWNLOADED OR PRINTED

Visit www.enstromhelicopter.com for instructions to order an original manual and to register for email notification of updates.

Table 11-3. Inspection Requirements – Idler Pulley and Yoke Assembly

Part Number	Fig. 11-13 Item Number	Part Name	Inspection*	Serviceable Limits*	Repair Limits*	Repair or Action
28-13292	8	Pulley Yoke	Bearing bore dia. 1.3781 to 1.3786	+.0002	Not Repairable	Replace Yoke
			Nicks and scratches	None Allowed	Maximum .008 deep	Polish to remove. Finish with #180 Emery cloth
			Brass bushing bore dia. .627 to .628	+.0005	Not Repairable	Replace bushings and line ream to size
			Actuator arm assembly mount hole dia. .250 to .251	None Allowed	Not Repairable	Replace Yoke
			Cracks	None Allowed	Not Repairable	Replace Yoke

* All dimensions are in inches.

UNCONTROLLED COPY WHEN DOWNLOADED OR PRINTED

Visit www.enstromhelicopter.com for instructions to order an original manual and to register for email notification of updates.

Table 11-4. Inspection Requirements – Idler Actuator Arm Assembly and Roller Assembly

Part Number	Fig. 11-14 Item Number	Part Name	Inspection*	Serviceable Limits*	Repair Limits*	Repair or Action
28-132008-11	9	Spacer	Length .350 to .353	-.0005	Not Repairable	Replace Spacer
			Bore dia. .250 to .254	+.0005	Not Repairable	Replace Spacer
			Ends perpendicular to bore within .001	None Allowed	Not Repairable	Replace Spacer
28-13318-7	10	Actuator Arm Assembly	Inspect for belt wear on side of arm	None Allowed	Not Repairable	Replace Arm
			Slot width .380 ± .010	+.003	Not Repairable	Replace Arm
			Notch worn in roller slot	.015 deep	Not Repairable	Replace Arm
			Brass bushing bore .3755 to .3765	+.001	Not Repairable	Replace Bushing
			Cracks	None Allowed	Not Repairable	Replace Arm
28-13245-901	11	Roller Assembly	Bearings (rotate free with no ratchety feeling)	None Allowed	Not Repairable	Replace Bearings
			Shaft (no end play)	None Allowed	.030 end play	Disassemble and shim to preload bearings
			Shaft threads (no crossed or missing threads	None Allowed	Not Repairable	Replace Shaft
28-13278	12	Spacer	Length. .260 +.000/-.005	None Allowed	Not Repairable	Replace Spacer
			O.D. .62 ± .015	None Allowed	Not Repairable	Replace Spacer
			I.D. .472 +.005/-.000	None Allowed	Not Repairable	Replace Spacer

UNCONTROLLED COPY WHEN DOWNLOADED OR PRINTED

Visit www.enstromhelicopter.com for instructions to order an original manual and to register for email notification of updates.

Table 11-4. Inspection Requirements – Idler Actuator Arm Assembly and Roller Assembly

Part Number	Fig. 11-14 Item Number	Part Name	Inspection*	Serviceable Limits*	Repair Limits*	Repair or Action
28-13299-1, -3	15	Belt Tension Assembly Yoke	Shaft threads (no crossed or missing threads)	None Allowed	Not Repairable	Replace Yoke
			Bolt holes .191 diameter	± .005	Not Repairable	Replace Yoke
			Cracks	None Allowed	Not Repairable	Replace Yoke
28-132005-11	18	Shaft	Threads – I.D. and O.D. (no crossed or missing threads)	None Allowed	Not Repairable	Replace Shaft

* All dimensions are in inches.

UNCONTROLLED COPY WHEN DOWNLOADED OR PRINTED

Visit www.enstromhelicopter.com for instructions to order an original manual and to register for email notification of updates.

Table 11-5. Inspection Requirements – Belt Roller Assembly

Part Number	Fig. 11-14 Item Number	Part Name	Inspection*	Serviceable Limits*	Repair Limits*	Repair or Action
28-13297	29	Roller	End cap bore dia. 1.8115 to 1.8120	None Allowed	Not Repairable	Replace Roller
			Nicks and scratches in O.D.	None Allowed	.005 deep	Polish to remove
28-13296	30	End Cap	O.D. dia. 1.8120 to 1.8125	None Allowed	Not Repairable	Replace End Cap
			Bearing bore dia. 1.2591 to 1.2586	None Allowed	Not Repairable	Replace End Cap
			Tube bore dia. 1.004 to 1.006	None Allowed	Not Repairable	Replace End Cap
ECD036-11	31	Bearing	Bore .4724, +.0000/-.0003	None Allowed	Not Repairable	Replace Bearing
			O.D. 1.2598, +.0000/-.0005	None Allowed	Not Repairable	Replace Bearing
			Check bearing for smooth rotation (no ratchet feeling)	None Allowed	Not Repairable	Replace Bearing
28-13248	32	Sleeve	Length 5.525	±.005	Not Repairable	Replace Sleeve
28-13246	33	Shaft	Bearing surface .469 to .471	-.0003	Not Repairable	Replace Shaft
			Threads (no crossed or missing threads)	None Allowed	Not Repairable	Replace Shaft
			All radii to be free of nicks and scratches	None Allowed	Not Repairable	Replace Shaft

* All dimensions are in inches.

UNCONTROLLED COPY WHEN DOWNLOADED OR PRINTED

Visit www.enstromhelicopter.com for instructions to order an original manual and to register for email notification of updates.

Table 11-6. Inspection Requirements – Upper Bellcrank Assembly

Part Number	Fig. 11-14 Item Number	Part Name	Inspection*	Serviceable Limits*	Repair Limits*	Repair or Action
ECD091-1, 09455-01-824-08E-011, MTK8, ASMK8T, 01-824-08E-011, M81935/1-08K, MS21242S8K, MXJKR-8R, or 01-691-08	38	Rod End Bearing Assembly	Threads (no crossed or missing threads)	None Allowed	Not Repairable	Replace Rod End
			Threads (corrosion)	None Allowed	Not Repairable	Replace Rod End
			Axial play of swivel ball	.007 clearance	Not Repairable	Replace Rod End
28-132009-11	39	Spacer	Bore .500 to .505	None Allowed	Not Repairable	Replace Spacer
			Width .090	±.005	Not Repairable	Replace Spacer
28-132006-11	40	Spacer	Length .765 to .785	None Allowed	Not Repairable	Replace Spacer
			O.D. .4935 to .4965	-.0003	Not Repairable	Replace Spacer

* All dimensions are in inches.

UNCONTROLLED COPY WHEN DOWNLOADED OR PRINTED

Visit www.enstromhelicopter.com for instructions to order an original manual and to register for email notification of updates.

11-9 BELT TENSION ASSEMBLY

A. Troubleshooting – Belt Tension Assembly

Problem	Possible Cause	Action
Clutch lever sticks when releasing from engaged position.	Notches worn in lower end of in brackets, causing nylon bushings to stick in slots.	Notches which do not exceed .050 inch deep may be polished and blended until clutch releases smoothly. Replace brackets if notch exceeds .050 inch deep.
Excessive play in slider bolt area (bottom bolt through spring capsule). Maximum play .025 inch.	Nylon bushings worn. (Check by holding each end of bolt and pulling in and out.)	Replace bushings. (Tighten nuts until there is a slight amount of drag in the movement of the nylon bushing in the slots).
Excessive side play in spring capsule piston.	Worn DU bushing in capsule end cap.	Remove belt tension assembly and remove spring capsule. Replace bushing.
Excessive play in over-center bellcrank	Worn oilite pivot bushings in bellcrank.	Replace bushings.
Excessive play at spring capsule end cap (clutch engaged)	Worn bushing	Replace bushing. (Para. 11-9.1.B)

B. Removal – Belt Tension Assembly (Fig. 11-17)

NOTE: Refer to Fig. 11-17 for numbered items unless stated otherwise.

(1) Remove left side aft cowling.

(2) Disconnect the micro-switch wiring.

(3) Remove bolt (1) and hardware that secures spring capsule rod end (5) to bellcrank (3).

(4) Remove bolt (8) and hardware that secures clutch cable rod end (12) to bellcrank (14).

(5) Remove bolts (12) and hardware that secures mount block (14) to belt tension assembly brackets (9) (Fig. 11-18).

(6) Remove bolts (15) and hardware that secures the belt tension assembly to the pylon (2 places).

(7) Remove the belt tension assembly.

C. Disassembly – Belt Tension Assembly

NOTE: Refer to Fig. 11-18 for numbered items.

(1) Remove bolt (20) from brackets (9) and remove spacers (21), (22) and (23).

UNCONTROLLED COPY WHEN DOWNLOADED OR PRINTED

Visit www.enstromhelicopter.com for instructions to order an original manual and to register for email notification of updates.

(2) Remove bolts (16) and spacers (19) from pivot straps (3).

(3) Remove bellcranks (18) and spacers (17).

(4) Remove bolt (1) from spring capsule (6) and remove pivot straps (3), spacers (4) and spacer (5).

(5) Remove nuts (7), washers (11) and nylon washers (10) from spring capsule slider bolt.

(6) Remove bolts (12) from brackets (9) and clutch cable mount block (14). Remove block (14).

(7) Remove brackets (9) from spring capsule (6).

D. Cleaning – Belt Tension Assembly

(1) Parts should be washed in toluene, kerosene, or an equivalent solvent. They may also be vapor degreased before inspection.

NOTE: The nylon bushings and washers may be deformed from the heat of a vapor degreaser and should be cleaned separately.

E. Inspection – Belt Tension Assembly

(1) See Table 11-7 for detailed inspection requirements of the belt tension assembly.

(2) Visually inspect the pylon area adjacent to the belt tensioning assembly mounting bracket for cracks (Fig. 11-20), wear caused by interference with the bottom of the capsule (14) (Fig. 11-19), and other damage.

(3) Replace bushing (5), if wear exceeds 0.020 inch/0.5 mm.

F. Repair – Belt Tension Assembly

(1) If contact between anchor (14) (Fig. 11-19) and pylon is observed, the bottom edge of the anchor may be chamfered (0.050 inch/1.3 mm maximum).

G. Assembly – Belt Tension Assembly

NOTE: Refer to Fig. 11-18 for numbered items.

(1) Install spacer (5) into ear of spring capsule assembly (6).

(2) Install bolt (1) through washer (2), strap (3), spacer (4), strap (3), and washer (2).

(3) Insert bolt through spacer (5) in the spring capsule assembly with the head of the bolt facing forward as installed in the helicopter.

(4) Install another washer (2), strap (3), spacer (4), strap (3), washer (2), and nut (7). Tighten nut to remove side play but do not torque at this point.

(5) Install nylon guide (8) on threaded shaft of spring capsule. Repeat on the opposite side.

UNCONTROLLED COPY WHEN DOWNLOADED OR PRINTED

Visit www.enstromhelicopter.com for instructions to order an original manual and to register for email notification of updates.

(6) Install brackets (9) on spring capsule with nylon guide (8) extending through the slots in the bracket.

(7) Install nylon washer (10) on nylon guide (8) flush against bracket (9).

(8) Install washer (11) and nut (7) on threaded shaft against the nylon washer. Partially tighten nuts until approximately two threads extend beyond the nut.

(9) Place mount block (14) between brackets (9) and install bolts (12) with washers (13) and nuts (15). Tighten bolts but do not torque at this time.

(10) Install spacer (17) in the center hole of bellcrank (18).

(11) Place bellcrank between straps (3) and insert bolt (16) through the straps and bellcrank with the head of the bolt inboard.

(12) Install washer (2), spacer (19), another washer (2) and nut (7) on bolt (16). Torque bolt (30-40 in-lb/3.4-4.5 Nm).

(13) Repeat steps 10 through 12 on opposite bellcrank (18).

NOTE: Straps (3) and bellcrank (18) should pivot freely at this point.

(14) Place spacer (22) between bellcranks (18) and insert spacer (23) through both bellcranks and spacer (22).

(15) Install spacers (21) on outboard ends of spacer (23).

(16) Place spacer stack-up between brackets (9) and insert bolt (20) through brackets and spacers using washers (2) and nut (7). The head of the bolt should be forward as installed in the helicopter. Partially tighten nut.

(17) Place unit on a flat surface so brackets (9) are standing flat and parallel to each other. Torque all bolts at pivot points and at mount block (14).

(a) AN4 bolts (1) and (20): 30-40 in-lb/3.4-4.5 Nm

(b) AN3 bolts (12): 12-15 in-lb/1.4-1.7 Nm

NOTE: Do not overtorque nuts against nylon washer and guide as spring capsule will not slide freely. You should be able to rotate the Harper washer (11) by hand after torque of nut. No side play should exist between nut and washer.

(18) Holding brackets (9) by hand, slide spring capsule assembly back and forth. Unit should slide with noticeable drag yet not bind in the pivot points or bracket slider.

(19) Place spacers (24) on each side of rod end and install bellcrank (28).

(20) Insert bolt (25) through bellcrank (28), spacers (24) and rod end using washers (26) and nuts (27).

(21) Install spacer (29) into bellcrank oilite bushings.

UNCONTROLLED COPY WHEN DOWNLOADED OR PRINTED

Visit www.enstromhelicopter.com for instructions to order an original manual and to register for email notification of updates.

H. Installation – Belt Tension Assembly

NOTE: The heads of all bolts in the belt tension assembly and bellcrank connections should be facing forward with the nuts on the aft side.

(1) Install belt tension assembly to the pylon mounts (Fig. 11-17):

(a) Install washers (16) between pylon mounts and belt tension brackets (18). Insert bolts (15) with washers (16) through the brackets and pylon mounts.

(b) Install washers (16) and nuts (17) and torque (12-15 in-lb/1.4-1.7 Nm).

(2) Install clutch cable mount block (14) (Fig. 11-18):

(a) Slide clutch cable and retention block (14) into the belt tension brackets (9) and install bolts (12) (Fig. 11-18).

(b) Install washers (13) and nuts (15) and torque (12-15 in-lb/1.4-1.7 Nm).

(3) Install the clutch cable rod end (12) (Fig. 11-17):

(a) Install washer (9) on bolt (8) and slide bolt through bellcrank arms (14), washers (10), spacer (11), and rod end (12).

(b) Install washer (9) and nut (13) and torque (30-40 in-lb/3.4-5.6 Nm).

(4) Install the rod end (5) of the spring capsule (7) (Fig. 11-17):

(a) Install washer (2) on bolt (1) and slide bolt through bellcrank arms (3), spacers (4), and rod end (5).

(b) Install washer (2) and nut (6) and torque (30-40 in-lb/3.4-5.6 Nm).

(5) Inspect the clutch control and belt tension mechanism rigging (Para. 11-1.A).

(6) Inspect all connections for security and check that all cotter pins are installed in double-locking hardware.

(7) Connect wiring for the micro-switch.

(8) Install left side aft cowling.

I. Replacement – Spring Capsule Bushing

(1) Spring Capsule Disassembly and Assembly

NOTE: The bushing (5) (Fig. 11-19) in the top of the spring capsule is a normal wear item. If the bushing is allowed to wear through the Teflon coating it will damage the adapter (3) requiring replacement of both the bushing and adapter.

NOTE: This procedure is written with the belt tension assembly installed.

NOTE: Ensure that the belt clutch is disengaged.

UNCONTROLLED COPY WHEN DOWNLOADED OR PRINTED

Visit www.enstromhelicopter.com for instructions to order an original manual and to register for email notification of updates.

(a) Remove the left side cowling.

(b) Remove hardware (24), (25), (26), and (27) (Fig. 11-18) connecting the spring capsule rod end (1) (Fig. 11-19) to the bellcrank (28) (Fig. 11-18).

(c) Remove screws (12) and washers (11) from the spring housing (13) (Fig. 11-19).

(d) Withdraw spring assembly (1) through (10) from spring housing (13).

(e) Remove the cotter pin through the rod end bearing (1) and loosen the two check nuts (2).

(f) Insert a flat screwdriver blade into the bottom end cap (8) to prevent nut (10) from turning and remove rod end (1) and the two check nuts (2) from the shaft (7).

(g) Measure the length of the exposed threads on rod (7) for reassembly.

(h) Remove adapter (3).

(i) Press the bushing (5) from the top of end cap (4).

(j) Insert a new 07DU08 bushing (5) into the top of end cap (4).

(k) Measure the adapter (3) to verify that it is within limits (Table 11-8).

(l) Install the adapter (3) and set it back to the same measurement obtained in step (g).

(m) Insert the two check nuts (2).

(n) Install the rod end (1). Line up the cotter pin hole and install the cotter pin.

(o) Apply grease (MIL-PRF-81322) liberally to the spring (6).

(p) Insert the spring assembly (1) through (10) back into the spring housing (13).

(q) Install the screws (12) and washers (11). Torque screws (20-25 in-lb/2.3-2.8 Nm).

(r) Safety wire the screws as a set of three around the outboard edge of the capsule. Do not run the safety wire around the inboard side of the capsule as the safety wire will contact the pylon when the clutch is engaged.

(s) Install spring capsule rod end attachment hardware (24) through (27) (Fig. 11-18). Torque nut (27) (50-70 in-lb/5.6-7.9 Nm) and install cotter pin (27).

(t) Verify that the clutch adjustment is correct (Para. 11-1).

(u) Torque jam nuts (2) (30-40 in-lb/4.3-4.5 Nm).

(v) Install cowling.

UNCONTROLLED COPY WHEN DOWNLOADED OR PRINTED

Visit www.enstromhelicopter.com for instructions to order an original manual and to register for email notification of updates.

J. Assembly – Spring Capsule Assembly

NOTE: Refer to Fig. 11-19 for numbered items.

(1) Press anchor (14) on spring housing (13) while aligning holes for shaft (15).

(2) Press retainer (16) into spring housing (13) while aligning holes for the shaft.

(3) Press shaft (15) through anchor, housing, and retainer until threads of shaft are equally spaced in the housing.

(4) Install lock nut (10) on shaft (7) until slot in the lock nut aligns with the cotter pin hole in the shaft. Install cotter pin.

(5) Install washer (9) and retainer (8) on shaft (7) with recess in the retainer covering nut (10).

(6) Install spring (6) over shaft (7) and seat on the retainer.

(7) Press bushing (5) into end cap (4).

(8) Install adapter (3) through end cap and bushing (5).

(9) Turn adapter (3) onto shaft (7) and compress spring until unit will slide into spring housing (13) without bottoming against retainer (16).

(10) Apply grease (MIL-PRF-81322) to spring and to wall of spring housing (13) and insert spring assembly into housing assembly.

(11) Insert screws (12) through washers (11). Turn into end cap (4). Torque screws (20-25 in-lb/2.3-2.8 Nm).

(12) Safety wire screws in set of three with 0.032 wire.

(13) Install both jam nuts (2) on shaft (7).

(14) Install rod end (1) on shaft (7) until hole in rod end aligns with hole in shaft.

(15) Install cotter pin through rod end.

(16) Lock upper jam nut (2) against rod end (1).

UNCONTROLLED COPY WHEN DOWNLOADED OR PRINTED

Visit www.enstromhelicopter.com for instructions to order an original manual and to register for email notification of updates.

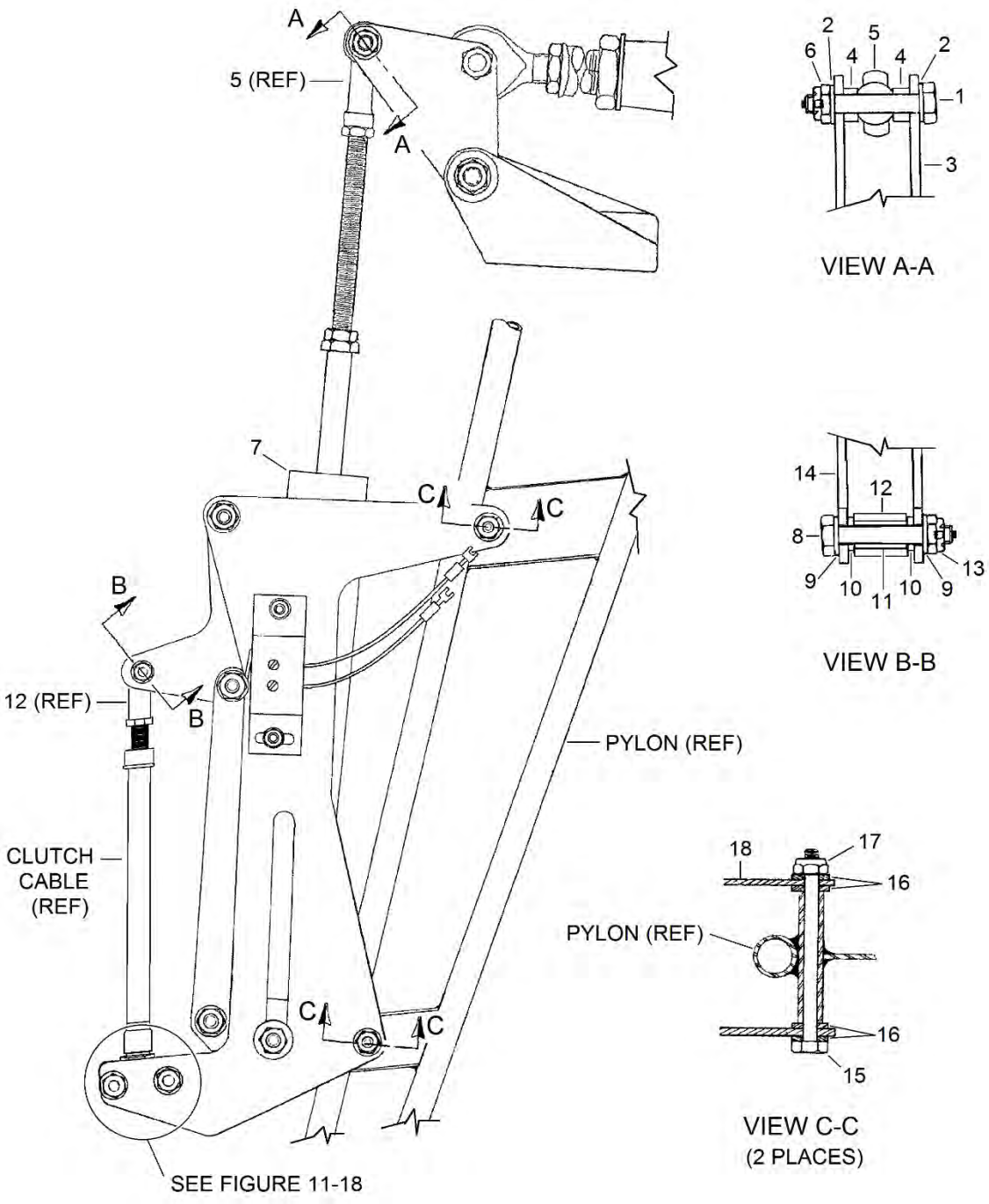

1.	Bolt	7.	Spring Capsule Assembly	13.	Nut
2.	Washer	8.	Bolt	14.	Bellcrank
3.	Bellcrank	9.	Washer	15.	Bolt
4.	Spacer	10.	Washer	16.	Washer
5.	Rod End (Spring Capsule)	11.	Spacer	17.	Nut
6.	Nut	12.	Rod End (Clutch Cable)	18.	Bracket

Figure 11-17. Belt Tension Assembly Installation

UNCONTROLLED COPY WHEN DOWNLOADED OR PRINTED

Visit www.enstromhelicopter.com for instructions to order an original manual and to register for email notification of updates.

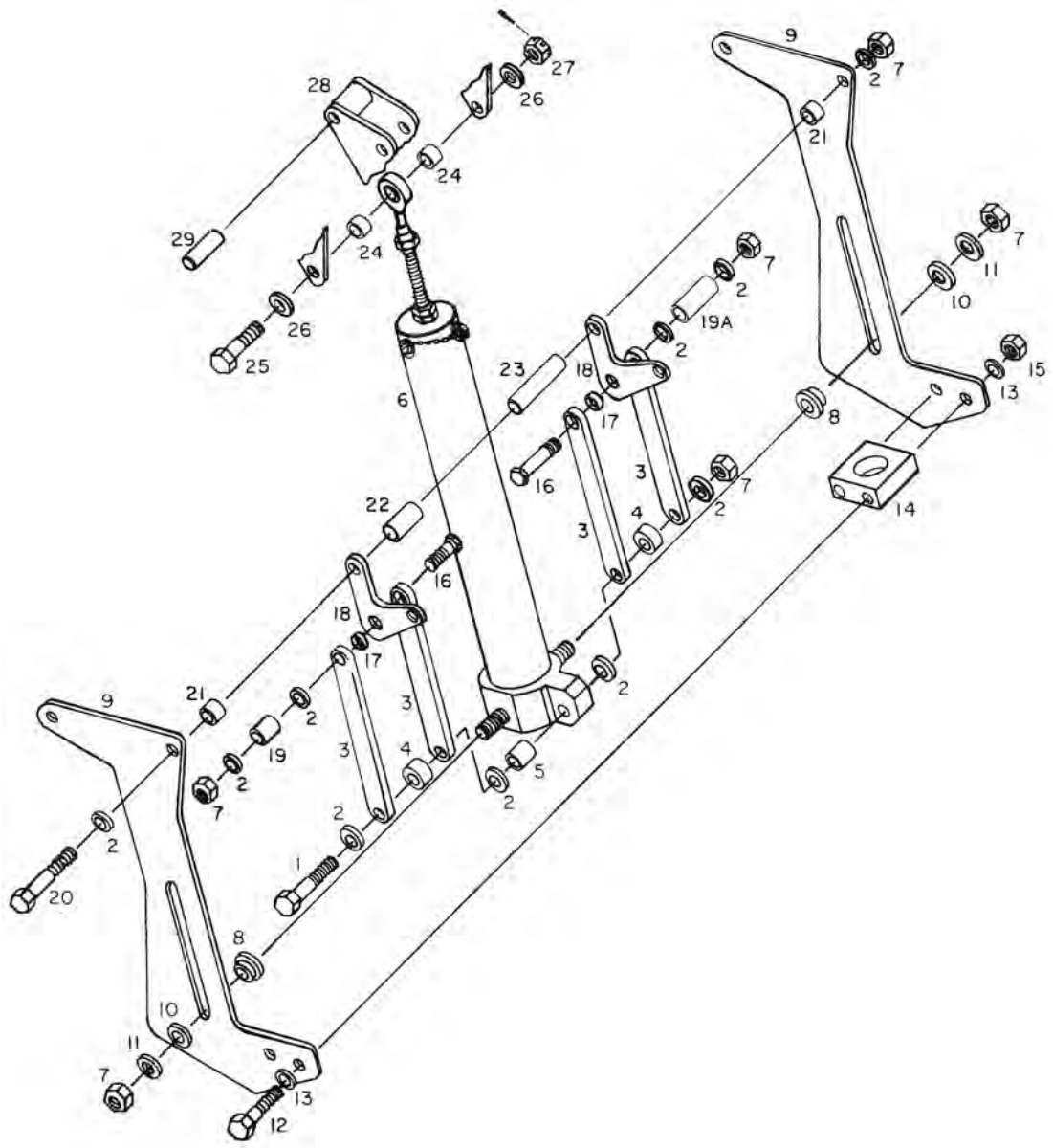

1.	Bolt	11.	Washer (1/4 Harper)	20.	Bolt
2.	Washer	12.	Bolt	21.	Spacer
3.	Strap	13.	Washer	22.	Spacer
4.	Spacer	14.	Mount Block	23.	Spacer
5.	Spacer	15.	Nut	24.	Spacer
6.	Spring Capsule Assembly	16.	Bolt	25.	Bolt
7.	Nut	17.	Spacer	26.	Washer
8.	Nylon Guide	18.	Bellcrank	27.	Nut
9.	Bracket	19.	Spacer	28.	Bellcrank Assembly
10.	Nylon Washer	19A.	Spacer	29.	Spacer

Figure 11-18. Belt Tension Assembly

UNCONTROLLED COPY WHEN DOWNLOADED OR PRINTED

Visit www.enstromhelicopter.com for instructions to order an original manual and to register for email notification of updates.

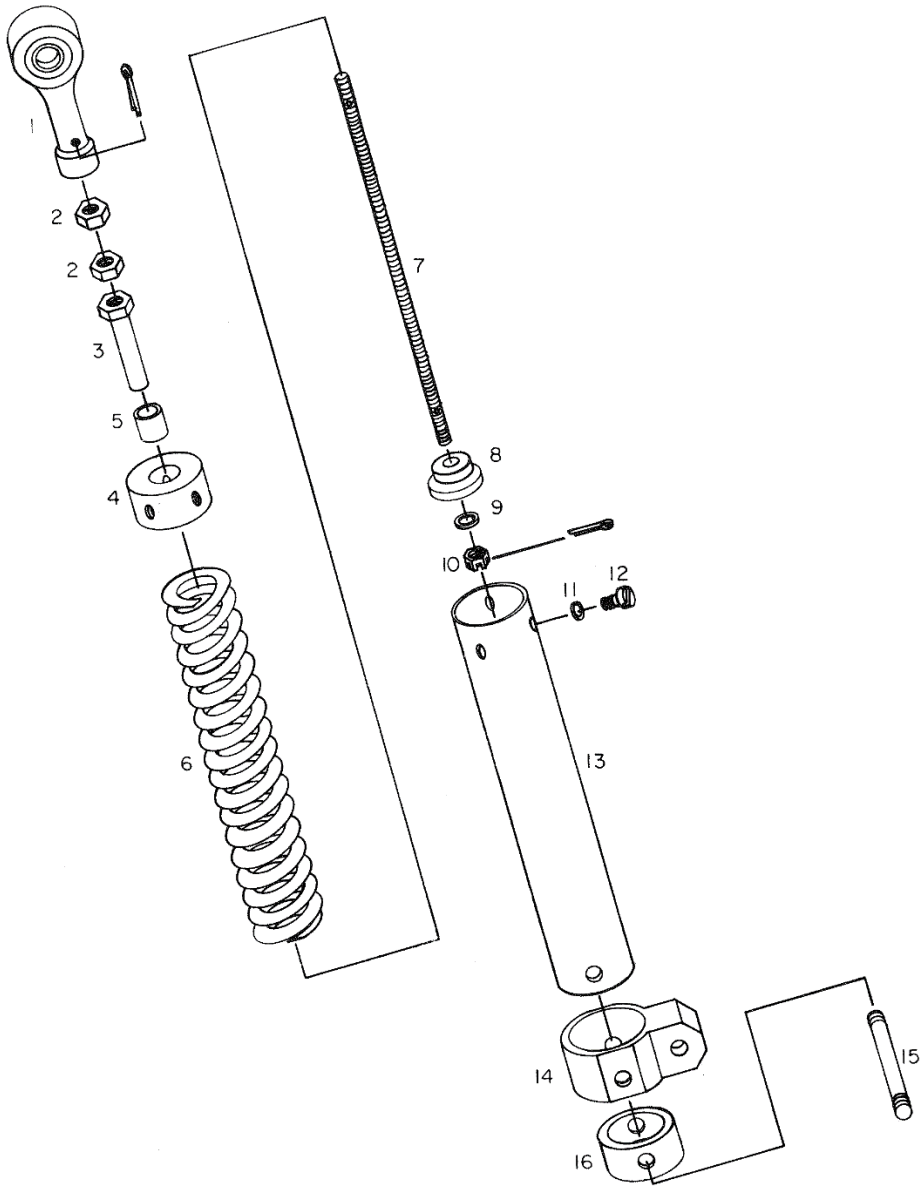

1.	Rod End	9.	Washer
2.	Jam Nut	10.	Nut
3.	Adapter	11.	Washer
4.	End Cap	12.	Screw
5.	Bushing	13.	Spring Housing
6.	Spring	14.	Anchor
7.	Shaft	15.	Shaft
8.	Cap	16.	Retainer

Figure 11-19. Spring Capsule Assembly

UNCONTROLLED COPY WHEN DOWNLOADED OR PRINTED

Visit www.enstromhelicopter.com for instructions to order an original manual and to register for email notification of updates.

Table 11-7. Inspection Requirements – Belt Tension Assembly

Part Number	Fig. 11-18 Item Number	Part Name	Inspection*	Serviceable Limits*	Repair Limits*	Repair or Action
28-13268	3	Strap	Bolt hole dia. .257	±.005	Not Repairable	Replace Strap
			Nicks and scratches	None Allowed	Not Repairable	Replace Strap
28-13277	4	Spacer	Width .125 to .130	None Allowed	Not Repairable	Replace Spacer
			I.D. .257	±.005	Not Repairable	Replace Spacer
28-13285-6	5	Spacer	Length .434 to .440	None Allowed	Not Repairable	Replace Spacer
			O.D. .3745 to .3755	None Allowed	Not Repairable	Replace Spacer
28-13264	8	Nylon Guide	I.D. .250 to .251	None Allowed	Not Repairable	Replace Nylon Guide
			Sliding surface, O.D. .3730 to .3740 .355 minimum	-.020	Not Repairable	Replace Nylon Guide
			Wear (sliding surface)	No flat areas allowed	Not Repairable	Position to non-flat area
28-13283	9	Bracket	Slot width .376 to .378	None Allowed	Not Repairable	Replace Bracket
			Notch wear in bottom end of slot	None Allowed	Notch .050 deep maximum	Polish and blend to remove deep radius into notch.
			Bolt hole dia. .191	None Allowed	Not Repairable	Replace Bracket
			Bolt hole dia. .249 to .251	None Allowed	Not Repairable	Replace Bracket
			Nicks and scratches in bracket	None Allowed	.005 deep max.	Polish and blend to remove
28-13265	10	Nylon Washer	Width .058 to .063	None Allowed	Not Repairable	Replace Washer
			I.D. .374 to .376	+.001	Not Repairable	Replace Washer
28-13269	14	Mount Block	Bore dia. .72	±.010	Not Repairable	Replace Block
			Bolt hole dia. .191	+.006	Not Repairable	Replace Block
28-13285-7	17	Spacer	Length .130 to .135	None Allowed	Not Repairable	Replace Spacer
			Bore dia. .3745 to .3755	None Allowed	Not Repairable	Replace Spacer

UNCONTROLLED COPY WHEN DOWNLOADED OR PRINTED

Visit www.enstromhelicopter.com for instructions to order an original manual and to register for email notification of updates.

Table 11-7. Inspection Requirements – Belt Tension Assembly

Part Number	Fig. 11-18 Item Number	Part Name	Inspection*	Serviceable Limits*	Repair Limits*	Repair or Action
28-13274	18	Bellcrank	Spacer hole dia. .376 to .378	+.0005	Not Repairable	Replace Bellcrank
			Bolt hole dia. .257	±.0005	Not Repairable	Replace Bellcrank
28-13267-1,	19	Spacer	(-1) Length .40	±.010	Not Repairable	Replace Spacer
28-13267-11	19A		(-11) Length 1.13 to 1.14	None Allowed	Not Repairable	Replace Spacer
			I.D. .250 to .252	±.001	Not Repairable	Replace Spacer
28-13280-3	21	Spacers	-3 Length .365 to .370	None Allowed	Not Repairable	Replace Spacer
28-13280-4	22		-4 Length .750 to .755	None Allowed	Not Repairable	Replace Spacer
			I.D. (both spacers) .376 to .380	+.001	Not Repairable	Replace Spacer
28-13285-5	23	Spacer	Length 1.750	None Allowed	Not Repairable	Replace Spacer
			I.D. .257	±.005	Not Repairable	Replace Spacer
28-16520	24	Spacer	Length .192 to .195	None Allowed	Not Repairable	Replace Spacer
			I.D. .249 to .250	±.001	Not Repairable	Replace Spacer
28-13260-1	28	Bellcrank	Bushing dia. .3755 to .3770	None Allowed	Not Repairable	Replace bushings and line ream to size
			Security of bellcrank sides to center spacer	No Looseness Allowed		Remove loose side and apply Loctite 277 to spacer. Replace bellcrank side. Note: Place ¼" bolts through holes for proper alignment.
28-13284	29	Spacer	Length 1.243 to 1.248	None Allowed	Not Repairable	Replace Spacer
			O.D. .3745 to .3755	None Allowed	Not Repairable	Replace Spacer

* All dimensions are in inches.

UNCONTROLLED COPY WHEN DOWNLOADED OR PRINTED

Visit www.enstromhelicopter.com for instructions to order an original manual and to register for email notification of updates.

Table 11-8. Inspection Requirements – Spring Capsule Assembly

Part Number	Fig. 11-19 Item Number	Part Name	Inspection*	Serviceable Limits*	Repair Limits*	Repair or Action
02-691-04	1	Rod End	Axial clearance	.007	Not Repairable	Replace Rod End
			Threads (no crossed or missing threads)	None Allowed	Not Repairable	Replace Rod End
28-13263	3	Adapter	O.D. .4360 to .4370	-.020	Not Repairable	Replace Adapter
			Threads (no crossed or missing threads)	None Allowed	Not Repairable	Replace Adapter
			Radial wear between Item 3 and Item 5	-.020		
28-13255	4	End Cap Assembly	O.D. 1.315 to 1.318	-.0005	Not Repairable	Replace End Cap
			Threads (no crossed or missing threads)	None Allowed	Not Repairable	Replace End Cap
			Bushing wear (See Item 5 below)			
07DU08	5	Bushing	O.D. .530	±.005	Not Repairable	Replace Bushing
28-13279	6	Spring	Free length 12.4 to 12.6	None Allowed	Not Repairable	Replace Spring
			Visual inspect side of spring for wear caused by rubbing.	.010	Not Repairable	Replace Spring
28-13256	7	Shaft	Threads (no rolled or missing threads)	None Allowed	Not Repairable	Replace Shaft
			Straightness (check with straight edge)	None Allowed	Not Repairable	Replace Shaft
28-13252	8	Spring Cap	O.D. 1.280	±.005	Not Repairable	Replace Cap
			Note: This dimension wears oval-shaped from rubbing against the housing walls.	Maximum .005 out of round	Not Repairable	Replace Cap

UNCONTROLLED COPY WHEN DOWNLOADED OR PRINTED

Visit www.enstromhelicopter.com for instructions to order an original manual and to register for email notification of updates.

Table 11-8. Inspection Requirements – Spring Capsule Assembly

Part Number	Fig. 11-19 Item Number	Part Name	Inspection*	Serviceable Limits*	Repair Limits*	Repair or Action
28-13253	13	Spring Housing	Ends of housing bored for end cap assembly, bore dia. 1.319 to 1.320	+.0002	Not Repairable	Replace Housing
			Housing wall thickness .030 to .040, inspect for wear in the I.D.	Max. .005 wear allowed		
			Shaft hole dia. .249 to .251	+.0005	Not Repairable	Replace Housing
28-13250-1, -11	14	Anchor	Bushing hole dia. .377 to .378	+.0003	Not Repairable	Replace Anchor
			Shaft hole bore dia. 1.376 to 1.380	+.0005	Not Repairable	Replace Anchor
			Bottom edge (nearest to the pylon)		.050 (1.3 mm)	Chamfer as required for clearance with pylon
28-13254	15	Shaft	Shaft O.D. .250	±.0005	Not Repairable	Replace Shaft
			Threads (no crossed or missing threads)	None Allowed	Not Repairable	Replace Shaft
28-13251	16	Retainer	O.D. 1.315 to 1.318	None Allowed	Not Repairable	Replace Retainer
			Shaft hole dia. .249 to .250	+.0005	Not Repairable	Replace Retainer

* All dimensions are in inches.

UNCONTROLLED COPY WHEN DOWNLOADED OR PRINTED

Visit www.enstromhelicopter.com for instructions to order an original manual and to register for email notification of updates.

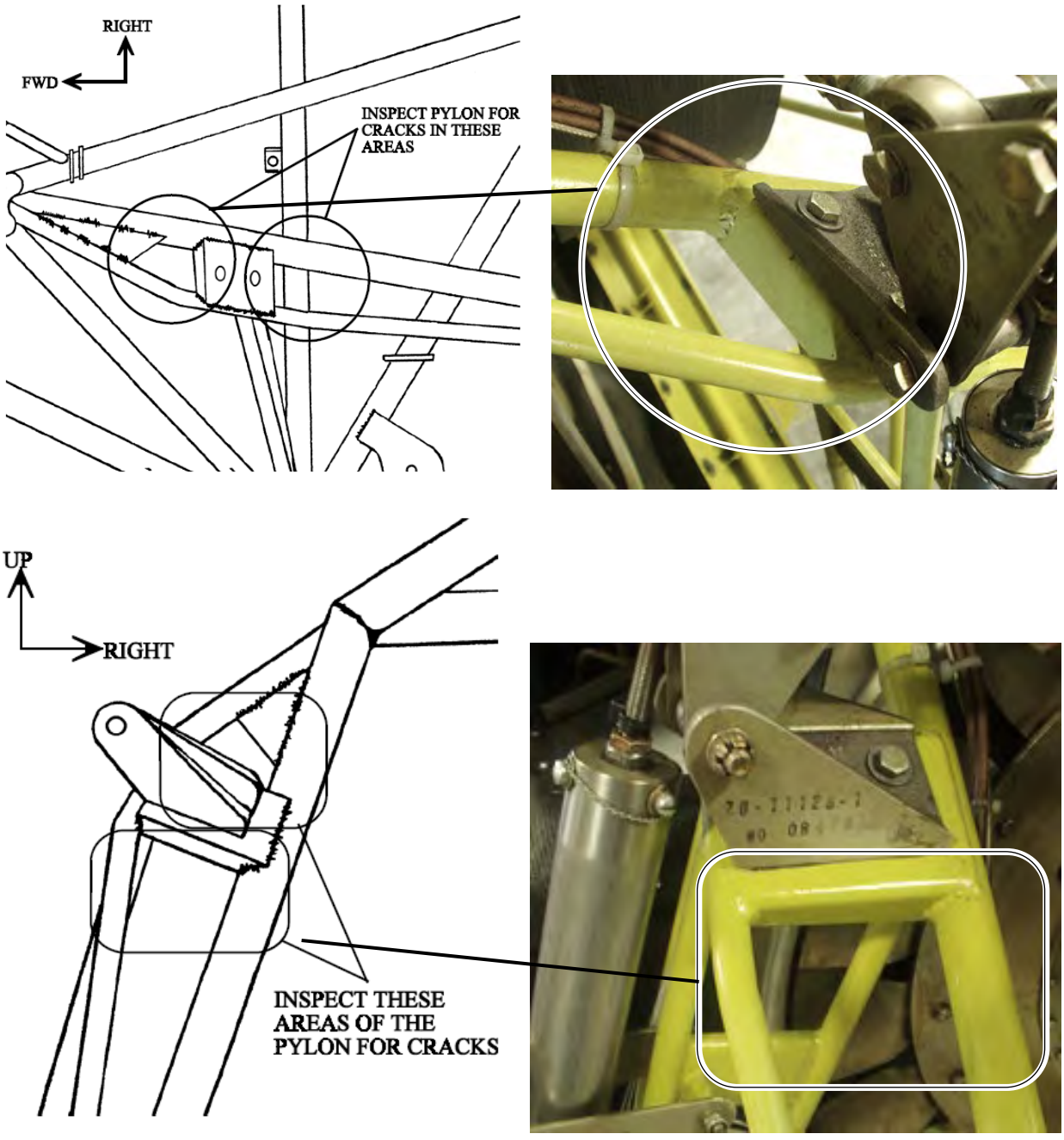

Figure 11-20. Belt Tension Assembly Pylon Mount Inspection Areas

Visit www.enstromhelicopter.com for instructions to order an original manual and to register for email notification of updates.

SECTION 12

FLIGHT CONTROLS

TABLE OF CONTENTS

Paragraph.....Page

12-1 Troubleshooting the Articulated Rotor System MM-12-3
A. General MM-12-3
B. Problems, Checks, Solutions MM-12-3

12-2 Main Rotor Blade Tracking MM-12-5
A. Installation of Equipment MM-12-7
B. Tracking Procedure MM-12-7
C. Tabbing Out Feedback MM-12-9
D. Hover Tracking MM-12-10
E. Forward Flight Tracking MM-12-10
F. Lateral Balancing MM-12-12
G. Clock Angle Corrections MM-12-14

12-3 Collective Pitch Control Stick MM-12-19
A. Description MM-12-19
B. Removal – Pilot Collective - MM-12-19
C. Installation – Pilot Collective MM-12-19
D. Removal – Copilot Collective MM-12-20
E. Installation – Copilot Collective MM-12-20

12-4 Collective Trim System MM-12-22
A. Removal MM-12-22
B. Disassembly MM-12-25
C. Assembly MM-12-25
D. Installation MM-12-25
E. Rigging MM-12-26

12-5 Cyclic Pitch Control Stick MM-12-27
A. Description MM-12-27
B. Cyclic Stick - Removal MM-12-27
C. Cyclic Stick - Installation MM-12-27

12-6 Lateral and Longitudinal Trim Actuators MM-12-28
A. Troubleshooting MM-12-28
B. Removal – Lateral Trim Actuator MM-12-28
C. Removal – Longitudinal Trim Actuator MM-12-30
D. Disassembly – Trim Actuator MM-12-30
E. Trim Actuator Part Replacement MM-12-30
F. Assembly – Trim Actuator MM-12-32
G. Installation – Lateral Trim Actuator MM-12-33
H. Installation – Longitudinal Trim Actuator MM-12-33
I. Trim Limit Operational Check MM-12-34

12-7 Flight Control Rigging MM-12-34
A. Preliminary Rigging MM-12-34
B. Cyclic Rigging – Seat Deck Area MM-12-34
C. Collective Rigging – Seat Deck Area MM-12-36
D. Cyclic Rigging to Swashplate MM-12-39
E. Main Rotor Hub – Cyclic and Collective Rigging MM-12-39
F. Inspection – Cyclic Control, Upper Bellcrank Mounts MM-12-43
G. Hardware Stack-up – Cabin Mount. MM-12-46

UNCONTROLLED COPY WHEN DOWNLOADED OR PRINTED

Visit www.enstromhelicopter.com for instructions to order an original manual and to register for email notification of updates.

SECTION 12

FLIGHT CONTROLS

TABLE OF CONTENTS

Paragraph.....Page

12-8 Cyclic Azimuth Check.....MM-12-47
A. Verification of Rigging.....MM-12-47
B. Autorotative RPM Adjustment.....MM-12-47

12-9 Cyclic Trim Springs Rigging Procedure.....MM-12-48
A. Lateral Bias Spring Installation.....MM-12-48
B. Lateral Adjustment.....MM-12-48
C. Longitudinal Bias Spring Installation.....MM-12-48
D. Longitudinal Adjustment.....MM-12-48

12-10 Lower Swashplate Assembly.....MM-12-50
A. Removal.....MM-12-50
B. Disassembly.....MM-12-50
C. Inspection.....MM-12-51
D. Assembly.....MM-12-54
E. Installation.....MM-12-57

12-11 Upper Swashplate Assembly.....MM-12-62
A. Removal.....MM-12-62
B. Disassembly.....MM-12-64
C. Troubleshooting.....MM-12-64
D. Inspection.....MM-12-66
E. Assembly.....MM-12-66
F. Installation.....MM-12-68

12-12 Main Rotor Push Pull Rods.....MM-12-74
A. Removal.....MM-12-74
B. Inspection.....MM-12-74
C. Installation.....MM-12-74

12-13 Flight Test Procedure.....MM-12-79
A. Preliminary Checks.....MM-12-79
B. Flat Pitch Test.....MM-12-79
C. Hover Test.....MM-12-80
D. Cruise Flight Test.....MM-12-81
E. Autorotation Checks at 60 MPH.....MM-12-82
F. V_H and V_{NE} Checks.....MM-12-83
G. Flight Check – Lateral Trim.....MM-12-83

UNCONTROLLED COPY WHEN DOWNLOADED OR PRINTED

Visit www.enstromhelicopter.com for instructions to order an original manual and to register for email notification of updates.

12-1 TROUBLESHOOTING THE ARTICULATED ROTOR SYSTEM

A. General Information

Helicopter vibration and cyclic feedback are often attributed to an out-of-track main rotor system when the actual cause can be traced to components within the system that are worn, damaged or out of adjustment.

The following troubleshooting guide is provided to direct maintenance personnel to possible problem areas within the rotor system that can cause vibration or roughness. This guide covers some of the problems and related causes that can be checked prior to attempting to track the blades. Performing the suggested checks and attention to routine maintenance schedules will help reduce time unnecessarily spent in attempting to track blades that may not be the cause of the problem.

B. Problems, Checks, and Solutions

NOTE: While this is not a complete listing of possible problems that could produce system vibration, it illustrates the fact that proper maintenance and inspection of system components can reduce maintenance time involved in trying to track blades that are reacting to problems elsewhere in the system.

NOTE: Lamiflex bearings are discontinued. If the Lamiflex bearings must be replaced, the aircraft must be converted to a TT strap retention assembly. Refer to Table 2-2 *Vendor Contact Information* to obtain the TT strap retention assembly installation (STC SR03465CH). Installation instructions and instructions for continued airworthiness publications are provided with the STC. (F-28F S/N 832 and subsequent and 280FX S/N 2147 and subsequent are equipped from the factory with the TT strap retention assembly installation, STC SR03465CH.)

(1) Aircraft develops a sudden roughness or cyclic feedback during flight.

Problem	Check	Action
Lamiflex bearing failure.	Disconnect the rotor pitch links at the upper walking beams (See Figure 1, Item A) and flex the blade grip in no more than a 30° (i.e. ± 15°) arc. Failure of the blade grip to spring back indicates a failed lamiflex bearing.	Install T-T strap retention assembly. Refer to Enstrom F-28/280 series Illustrated Parts Catalog, Figure 4-2.1 for parts.
Main rotor damper seized or relief valve stuck or open.	Cycle blades fore and aft to move damper piston in and out. Failure of damper to cycle indicates a restrictor is plugged.	Disassembly and clean damper and restrictor. Replace relief valves.
Leading edge tape bubbling, loosening, or peeling (if blade tape is used).	Inspect tape for separation from blades.	Repair or replace leading edge tape (Para. 9-10, S).
Main rotor blade/ leading/trailing edge separation occurring.	Inspect blades for evidence of separation.	Replace or repair blade.

NOTE: Replacement blades must be matched by Enstrom Helicopter Service. Provide serial numbers of good blades and helicopter serial number. Blade repairs must be performed by an authorized blade repair facility.

Main rotor blade suffered strike.	Inspect blades for evidence of strike damage.	Extent of damage will determine if the blade requires replacement.

UNCONTROLLED COPY WHEN DOWNLOADED OR PRINTED

Visit www.enstromhelicopter.com for instructions to order an original manual and to register for email notification of updates.

(2) Aircraft's first flight is rough or has cyclic feedback; previous day's flight was smooth.

Problem	Check	Action
Trapped air in the dampers.	Check air in dampers.	Bleed damper.
Lamiflex bearing failure	Disconnect the rotor pitch links at the upper walking beams and flex the blade grip in no more than a 30° (i.e. ± 15°) arc. Failure of the blade grip to spring back indicates a failed lamiflex bearing.	Install T-T strap retention assembly. Refer to Enstrom F-28/280 series Illustrated Parts Catalog, Figure 4-2.1 for parts.
Leading edge tape bubbling, loosening, or peeling (if blade tape is used).	Inspect tape for separation from blades.	Repair or replace leading edge tape (Para. 9-10, S).
Grip seal pushed out during servicing	Check that the seals are installed in the grips.	Remove purge plug and push seal back in.
Main rotor blade tab inadvertently bent.	Check tab angles. Inspect tabs for damage or deformation.	Reset tab angles as recorded on the "Blade Information Sheet", or replace tabs if damaged.

NOTE: If tab angles are not available, contact Enstrom Helicopter Service for original angles. Provide aircraft serial number.

Main rotor blades suffered "hangar rash" damage. Improper main rotor blade grip servicing	Inspect blades for evidence of damage. Check lubrication procedure in accordance with Para. 4-28.	Extent of damage will determine if blade replacement is required. Relieve any internal pressure by removing purge screw feathering the blade grip. Then replace the purge screw.

(3) Aircraft generally develops in increasing roughness or cyclic feedback over a period of days.

Problem	Check	Action
Trapped air in the dampers.	Check air in dampers.	Bleed damper.
Lamiflex bearing failure.	Disconnect the rotor pitch links at the upper walking beams and flex the blade grip in no more than a 30° (i.e. ± 15°) arc. Failure of the blade grip to spring back indicates a failed lamiflex bearing.	Install T-T strap retention assembly. Refer to Enstrom F-28/280 series Illustrated Parts Catalog, Figure 4-2.1 for parts.

UNCONTROLLED COPY WHEN DOWNLOADED OR PRINTED

Visit www.enstromhelicopter.com for instructions to order an original manual and to register for email notification of updates.

Problem	Check	Action
Leading edge tape bubbling, loosening, or peeling (if blade tape is used). Worn linkage.	Inspect tape for separation from blades.	Repair or replace leading edge tape (Para. 9-10, S).
Dogleg uni-ball bearings worn excessively (Figure 12-22, Item 10).	Check the swashplate dog leg assemblies for excessive bearing play/wear (Para. 12-11, D).	Reswage or replace bearings as required.
Overall control system rod end bearings or bellcrank spacers/bushings are worn.		Replace worn components as required.
Blade paint, spar flaking, voids, skin, doublers, or retention plate damage.	Check the blade assembly condition. (See Para. 9-9 and limits in Figure 9-20.)	Repair damage in accordance with Para. 9-10, A, as applicable. If voids exceed limits, replace blade.
If aircraft is new, touching up the blade track may be required due to wear in and seating of system components.	Check track. NOTE: Refer to the tracking procedures in Section 12-2, F.	Track blades.

12-2 MAIN ROTOR BLADE TRACKING

NOTE: The Honeywell Chadwick 2000 system installation and operation are described in the following instructions. Follow the operating instructions for the equipment being used if different than the instructions for the Chadwick 2000.

NOTE: This procedure should be followed when using the MicroVib™II and ACES or DynaVibe systems with modifications required by the individual system used.

UNCONTROLLED COPY WHEN DOWNLOADED OR PRINTED

Visit www.enstromhelicopter.com for instructions to order an original manual and to register for email notification of updates.

NOTE: Blades manufactured with Universal spars must be hover tracked to .2 IPS or less before any attempt is made to work out the cyclic feedback; otherwise, the cyclic feedback will return when the hover is tracked.

NOTE: Do not change the tip weights in the blades from original factory settings.

NOTE: If there is no cyclic feedback and the helicopter has been flying satisfactorily, it is recommended not to change outboard tab settings.

The purpose in tracking the main rotor blades is to obtain a smooth ride. This is accomplished by adjusting the blade track to reduce vibration. An out-of-track condition will produce a vibration, usually a one-per rev which is felt as a vertical vibration, however for the rotor system to be in track, it does not necessarily mean that the blades are flying in the same plane. With the advent of modern digital tracking equipment it has been found that the best ride is not necessarily the result of the blades flying in plane, but in a track that gives the least magnitude of vertical vibration. For this reason, Enstrom recommends that the strobe light only be used on the ground for initial ground track or for initial hover track if the initial ride is unacceptably rough.

The tracking procedure (vertical) follows this flow chart:

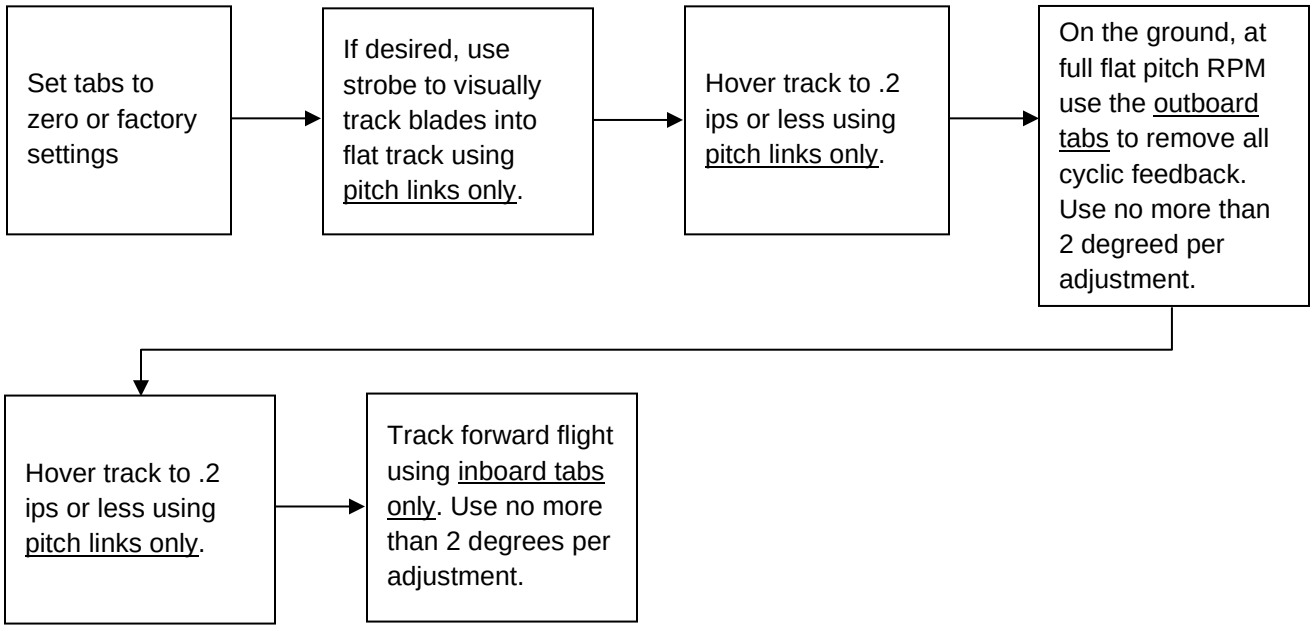

Figure 12-1. Tracking Procedure Flow Chart

UNCONTROLLED COPY WHEN DOWNLOADED OR PRINTED

Visit www.enstromhelicopter.com for instructions to order an original manual and to register for email notification of updates.

A. Installation of Equipment

(1) Install the optical sensor on the fuel tank (F-28F) or on the top air intake fairing (280FX) (Figure 12-2).

(2) The number one blade (Target blade) must be at the 12 o'clock position relative to the front of the helicopter when the magnetic pick-up is opposite the interrupter on the swashplate, or when the optical sensor is opposite the reflective tape on the mast.

(3) Install the vertical velocimeter on the right side of the instrument panel pedestal (Figure 12-3).

NOTE: Enstrom recommends not using a strobe light to track blades. Three-blade rotor systems do not necessarily fly in track and the strobe may produce misleading information and lengthen the tracking procedure.

(4) Install the strobe light, if desired, or if there is reason to believe that the initial hover will be unacceptably rough.

(5) Set up the analyzer using the manufacturer's instructions and the following parameters:

(a) Three main rotor blades

(b) Counterclockwise rotation when viewed from above

(c) 350 RPM

B. Tracking Procedure

(1) Grease the flapping bearings (Para. 4-30).

(2) Bleed the main rotor dampers (Para. 4-18).

NOTE: If the helicopter is already flying reasonably well do not make any adjustments to the tabs at this time.

(3) Set the tabs at recorded angles on the "Blade Information Sheet" or zero all the tabs.

WARNING: THE FOLLOWING STEPS ARE TO BE PERFORMED BY AUTHORIZED PERSONNEL.

(4) Ground run helicopter with rotor engaged at full "flat pitch" rpm.

(5) If the strobe light is being used, observe the track of the blades and use pitch links to adjust the track into a reasonable flat track.

(6) Hover the helicopter into the wind at 350 RPM.

NOTE: The best results are obtained if the helicopter is loaded so that the helicopter is relatively heavy. Normally, adding weight will make the blades fly at a higher angle of attack and will increase the roughness of the ride, while as the helicopter gets lighter from fuel burn, the ride will improve.

UNCONTROLLED COPY WHEN DOWNLOADED OR PRINTED

Visit www.enstromhelicopter.com for instructions to order an original manual and to register for email notification of updates.

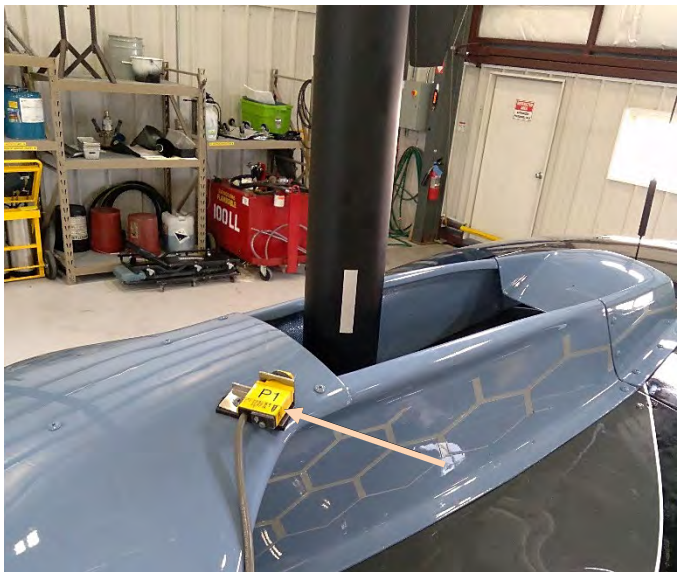

Figure 12-2. Optical Sensor Installation (280FX)



Figure 12-3. Velocimeter Installation (280FX)

UNCONTROLLED COPY WHEN DOWNLOADED OR PRINTED

Visit www.enstromhelicopter.com for instructions to order an original manual and to register for email notification of updates.

(7) Record the ips reading and the clock angle. Using the Vertical Velocimeter Channel B Polar Chart (Figure 12-4), adjust track for ips readings of less than .2 using pitch links.

NOTE: If the move line of the weight change does not coincide with the move lines on the chart, use the “Clock Angle Correction” procedure (Para. 12-G).

NOTE: The rotor system must be hover tracked to .2 ips or less before performing the procedure to tab out cyclic feedback.

C. Tabbing Out Feedback

Cyclic feedback is a pulsing felt in the cyclic stick at main rotor 1/rev frequency. Tabbing out cyclic feedback is the most difficult and the most important procedure in achieving optimum ride in Enstrom helicopters with minimum cyclic vibration. Less than optimum outboard tabbing will result in excessive inboard tab to achieve a smooth ride and also excessive cyclic stick vibration. Unfortunately there is no reliable method of determining the correct outboard tab other than trial and error.

(1) Create a chart such as the one shown below to record the results of the tabbing runs.

Tab	Result
1 Up	
1 Down	
2 Up	
2 Down	
3 Up	
3 Down	

(2) Operate the helicopter on the ground at full flat pitch blade RPM (350 RPM).

(3) Move the cyclic six to eight inches in a forward and aft movement at approximately one cycle per second and feel for feedback in the cyclic motion.

NOTE: Feedback will not necessarily be indicated by cyclic stick shake, although stick shake will result from significant feedback.

(4) Stop the blades and add 2 degrees up to the #1 blade outboard tab.

(5) Run the helicopter again using the same procedures and check the cyclic for feedback again. The purpose of this procedure is to compare the feedback to the original tabbing and to the last tab attempt. The severity of the feedback will stay the same, get better or get worse. Record this result in the table above.

(6) If the feedback is eliminated, this procedure is finished. If the magnitude of the cyclic feedback either stays the same, or worsens, then change the setting on the same outboard tab to two degrees down. If the feedback gets better but is still present, add one more degree. Do not use more than 4° in any tab.

UNCONTROLLED COPY WHEN DOWNLOADED OR PRINTED

Visit www.enstromhelicopter.com for instructions to order an original manual and to register for email notification of updates.

(7) Run the helicopter again and using the same procedure, compare the magnitude of the cyclic feedback. Again, it should either be eliminated, stay the same or get worse. If it stays the same or gets worse, then set the #1 blade outboard tab back to zero, and add two degrees up to the #2 blade outboard tab.

(8) Continue this procedure until each blade has been checked for both up and down tab, or until the feedback has been eliminated.

(9) By following this procedure it should be possible to eliminate the cyclic feedback with one outboard tab adjustment on one blade.

D. Hover Tracking

(1) Using pitch links, re-track the hover to less than .2 ips using Figure 12-4 (vertical polar chart). If the above procedure is followed, once the hover has been tracked smooth, the cyclic feedback should not reoccur.

E. Forward Flight Tracking

(1) Forward flight is tracked using the inboard blade tabs.

(a) Fly the helicopter at normal cruise settings (29 in MP) and record the ips reading and the clock angle.

(b) Using the same polar chart (Figure 12-4) adjust the forward flight to less than .2 ips with the inboard tabs.

NOTE: If addition of inboard tab affects the hover, take that tab out again and try opposite tab on the other two blades.

NOTE: When making clock angle corrections, if a tab change does not improve the ips reading, it is advised to take the tab adjustment out again and try adjusting the inboard tab on another blade. Failure to follow this procedure will result in excessive tab amounts on all the blades.

(2) Continue this procedure until the forward flight ips reading is .2 or less.

UNCONTROLLED COPY WHEN DOWNLOADED OR PRINTED

Visit www.enstromhelicopter.com for instructions to order an original manual and to register for email notification of updates.

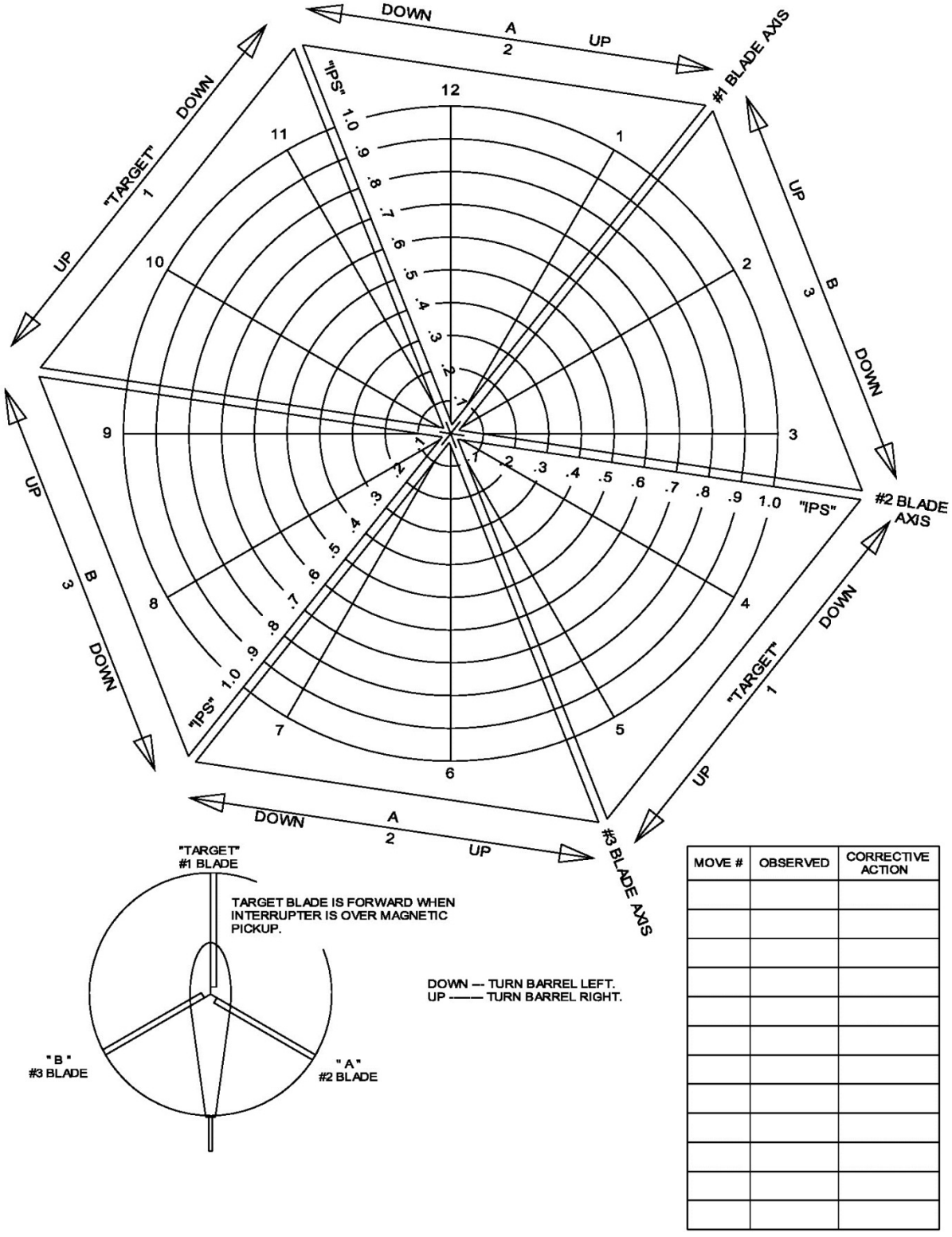

Figure 12-4. Vertical Accelerometer Channel “B” Polar Chart

UNCONTROLLED COPY WHEN DOWNLOADED OR PRINTED

Visit www.enstromhelicopter.com for instructions to order an original manual and to register for email notification of updates.

F. Lateral Balancing

CAUTION: READING THE LATERAL CHANEL IS RECOMMENDED AS A TROUBLESHOOTING PROCEDURE TO ISOLATE A FAULTY COMPONENT THAT IS CREATING AN OUT OF BALANCE CONDITION.

IF WORK HAS BEEN DONE TO THE BLADES AS PER PARA. 12-1, FOLLOW THE PROCEDURES LISTED BELOW.

(1) It is not recommended to change tip weights in the Enstrom rotor system because there is no centering mechanism in the hydraulic lead-lag dampers. Changing tip weights usually results in the blade flying in different lead-lag position but will not cure the underlying cause of a lateral imbalance.

(2) If a set of blades is suspected to be out of balance, they can be statically balanced as a set. Contact Enstrom Product Support for information about static balancing blades or obtaining a static balance kit.

(3) The Lateral Accelerometer Channel “A” Polar Chart (Figure 12-5) can be used to help determine which axis (lead-lag bearing, damper, or out-of-balance blade is causing the lateral vibration.

(a) Install the optical sensor and a velocimeter on a top fuel tank screw, indexed 90° to the longitudinal axis of the helicopter.

(b) Obtain a vertical and lateral ips and clock angle reading. The higher of the two readings is usually the axis that is causing the vibration.

1 IPS readings around .2 or less are unreliable for determining if the vibration is vertical or lateral.

2 A significant ips vibration in either axis will pull up the ips reading of the other axis also. (A high vertical will also cause a high lateral and vice-versa.)

3 Plot the clock angle of the lateral reading. This should indicate the blade axis that is causing the lateral vibration.

4 It may be necessary to make a temporary weight change in the indicated blade to establish if there is a clock angle correction required on the “A” chart.

UNCONTROLLED COPY WHEN DOWNLOADED OR PRINTED

Visit www.enstromhelicopter.com for instructions to order an original manual and to register for email notification of updates.

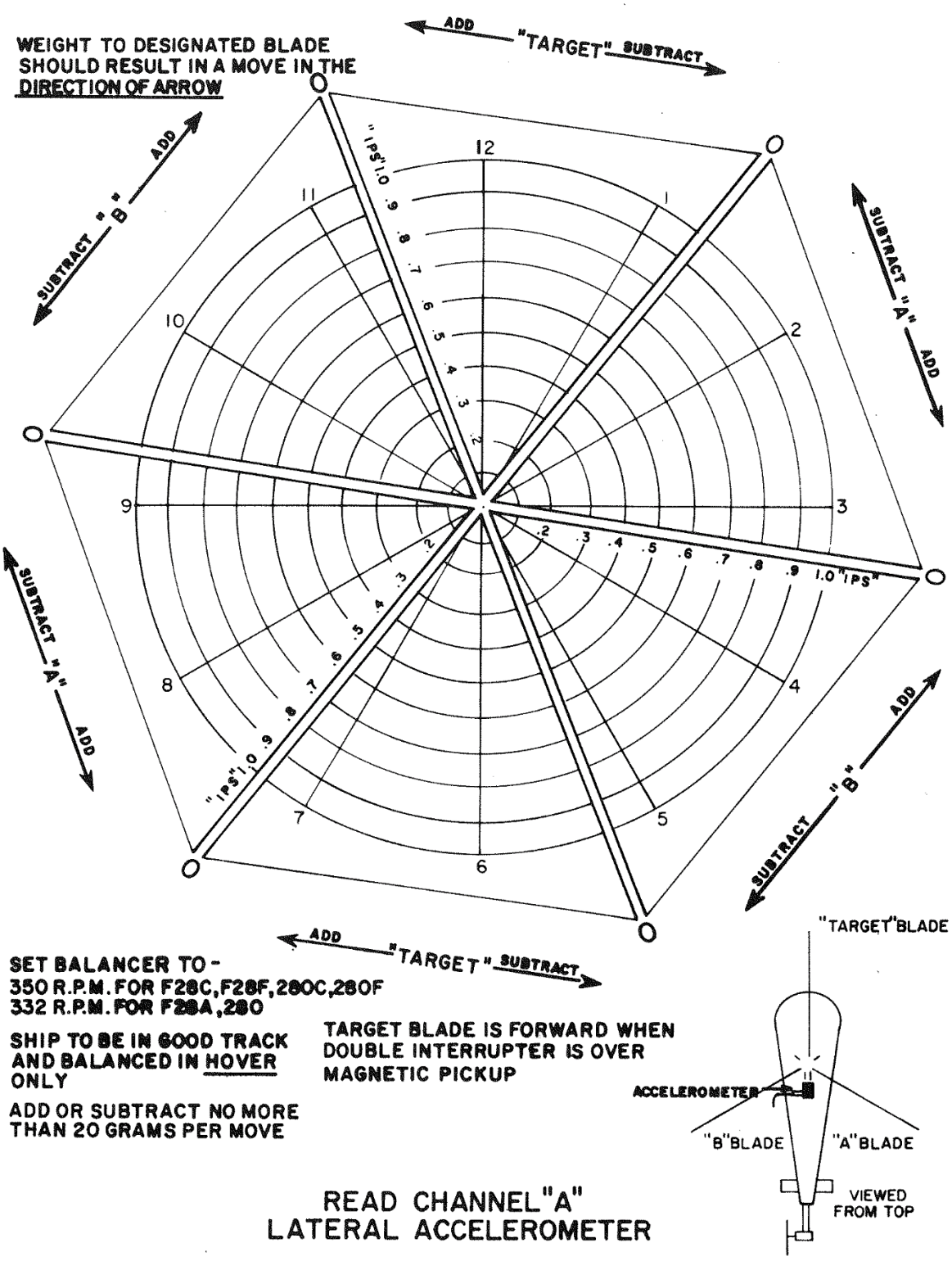

Figure 12-5. Lateral Accelerometer Channel “A” Polar Chart

UNCONTROLLED COPY WHEN DOWNLOADED OR PRINTED

Visit www.enstromhelicopter.com for instructions to order an original manual and to register for email notification of updates.

G. Clock Angle Corrections

NOTE: The clock angle correction is seldom the same in hover as it is in forward flight so when the tracking progresses to the forward flight phase, a new chart should be used, and the correction will have to be figured again.

NOTE: In some cases, particularly when the ips readings progress from a large number to a small number, the clock angle correction may change or go away entirely. The technician needs to plot all the moves and to be ready to recalculate or abandon the clock angle correction, if needed.

If a series of plotted blade track corrections move in a circular direction on the polar chart rather than moving toward the center of the chart, a clock angle correction is required. The following procedure was developed using the Chadwick Vibrex 2000 balance system. The procedure can be adapted for use with any of the digital balance boxes when the internal learning program is disabled.

(1) A reading of .6 ips at a clock angle of 3:30 for the first hover run is plotted on the polar chart (Figure 12-6).

(2) #2 blade is adjusted approximately 1/3 flat down. A reading of .5 ips at a clock angle of 1:30 for the second hover run is plotted (Figure 12-6.1). Clearly, the adjustment did not produce the expected move on the polar chart. This indicates that the polar chart is not correctly aligned to the helicopter.

(3) Observation of run #1 and run #2 plots indicates that the tracking response is following the #3 blade axis line. Therefore, the blade correction move lines must be shifted clockwise one flat (60°) (Figure 12-6.2). This is the Clock Angle Correction.

(4) According to the corrected chart, the #3 blade should be adjusted 1/3 flat down. A reading of .2 ips at a clock angle of 1:00 for the third hover run is plotted on the corrected chart (Figure 12-6.3). The move corresponds well with the corrected chart and the tracking procedure is complete.

UNCONTROLLED COPY WHEN DOWNLOADED OR PRINTED

Visit www.enstromhelicopter.com for instructions to order an original manual and to register for email notification of updates.

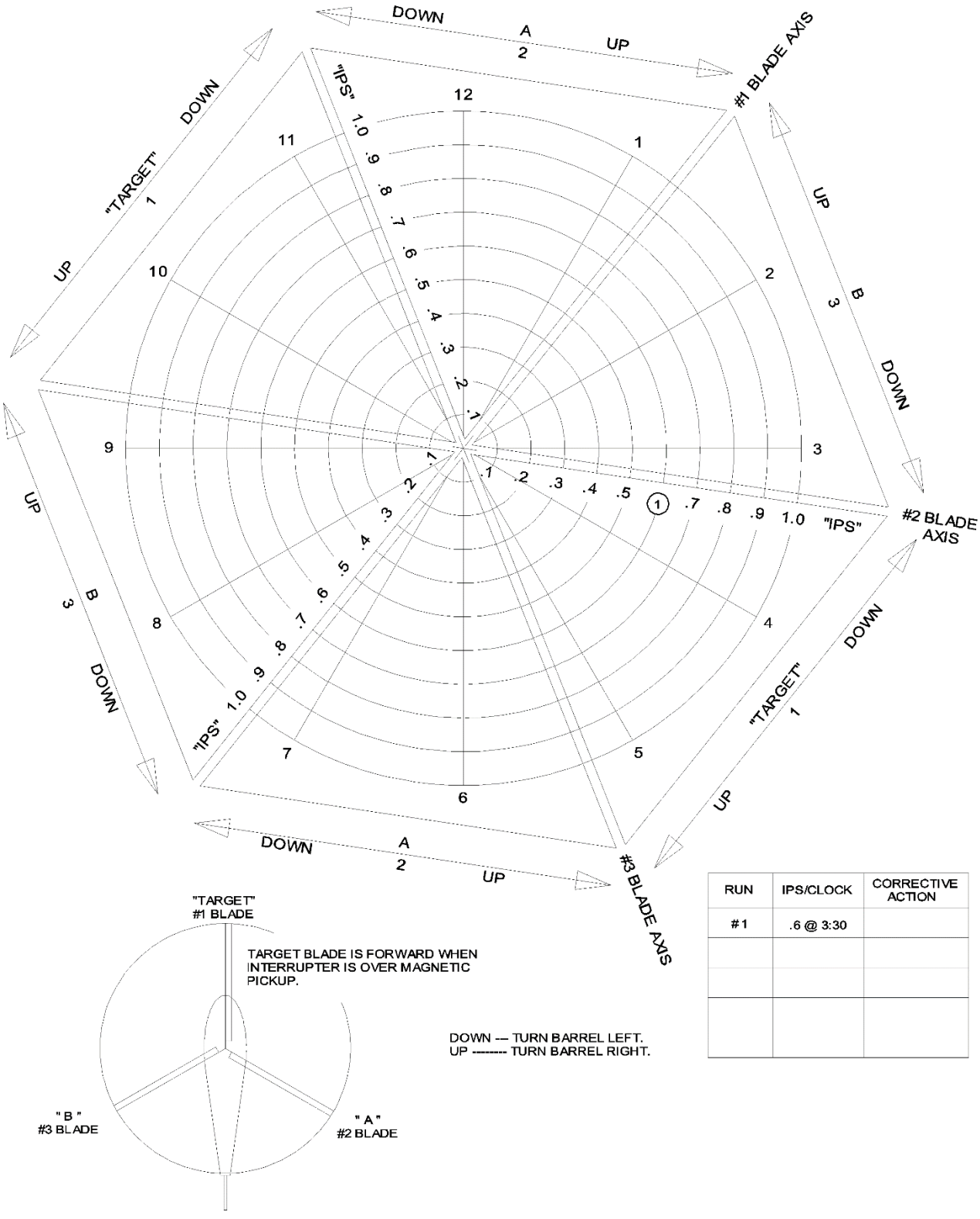

RUN	IPS/CLOCK	CORRECTIVE ACTION
#1	.6 @ 3:30	

Figure 12-6. Main Rotor Clock Angle Correction Example

Visit www.enstromhelicopter.com for instructions to order an original manual and to register for email notification of updates.

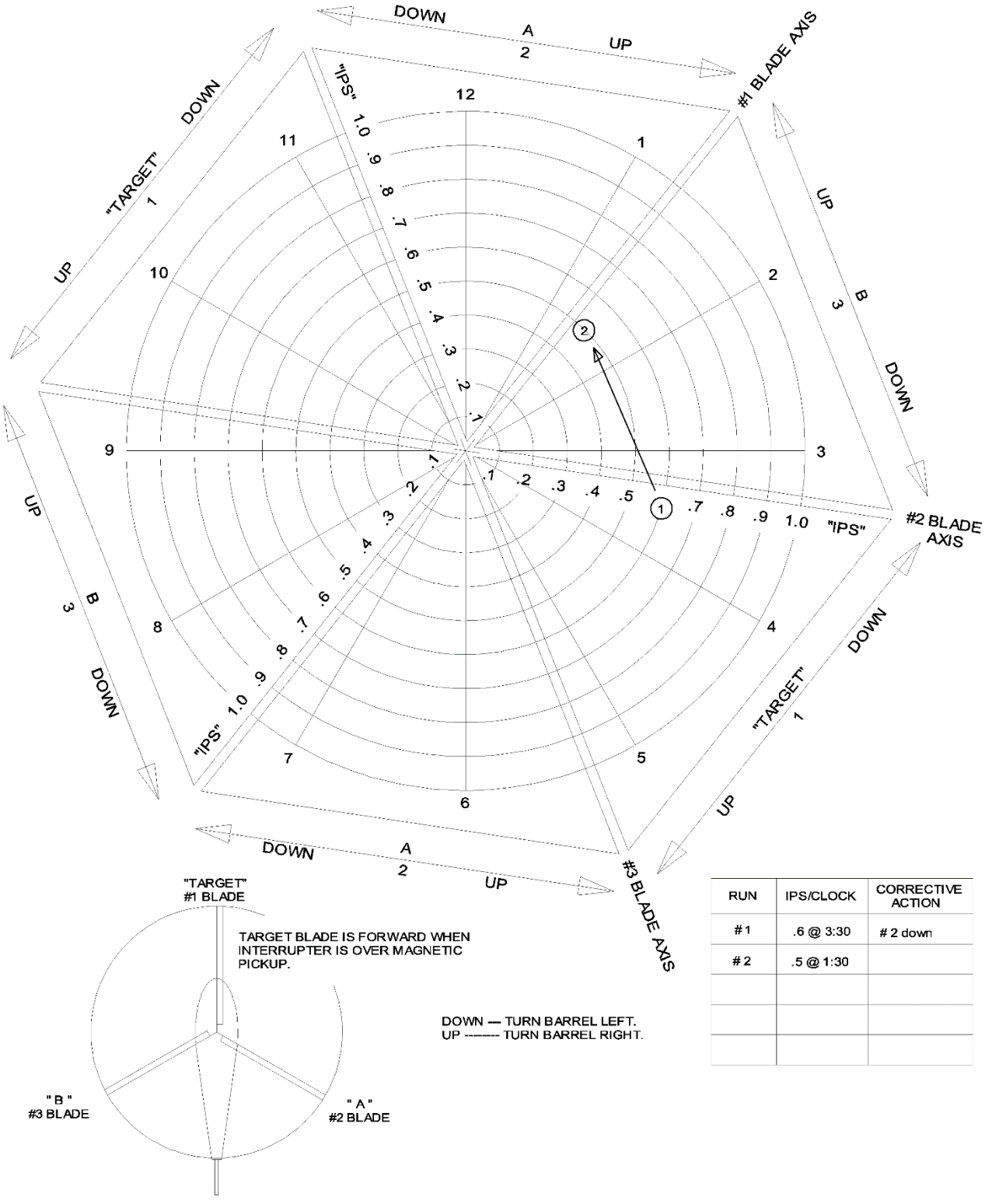

RUN	IPS/CLOCK	CORRECTIVE ACTION
#1	.6 @ 3:30	# 2 down
#2	.5 @ 1:30	

Figure 12-6.1. Main Rotor Clock Angle Correction Example

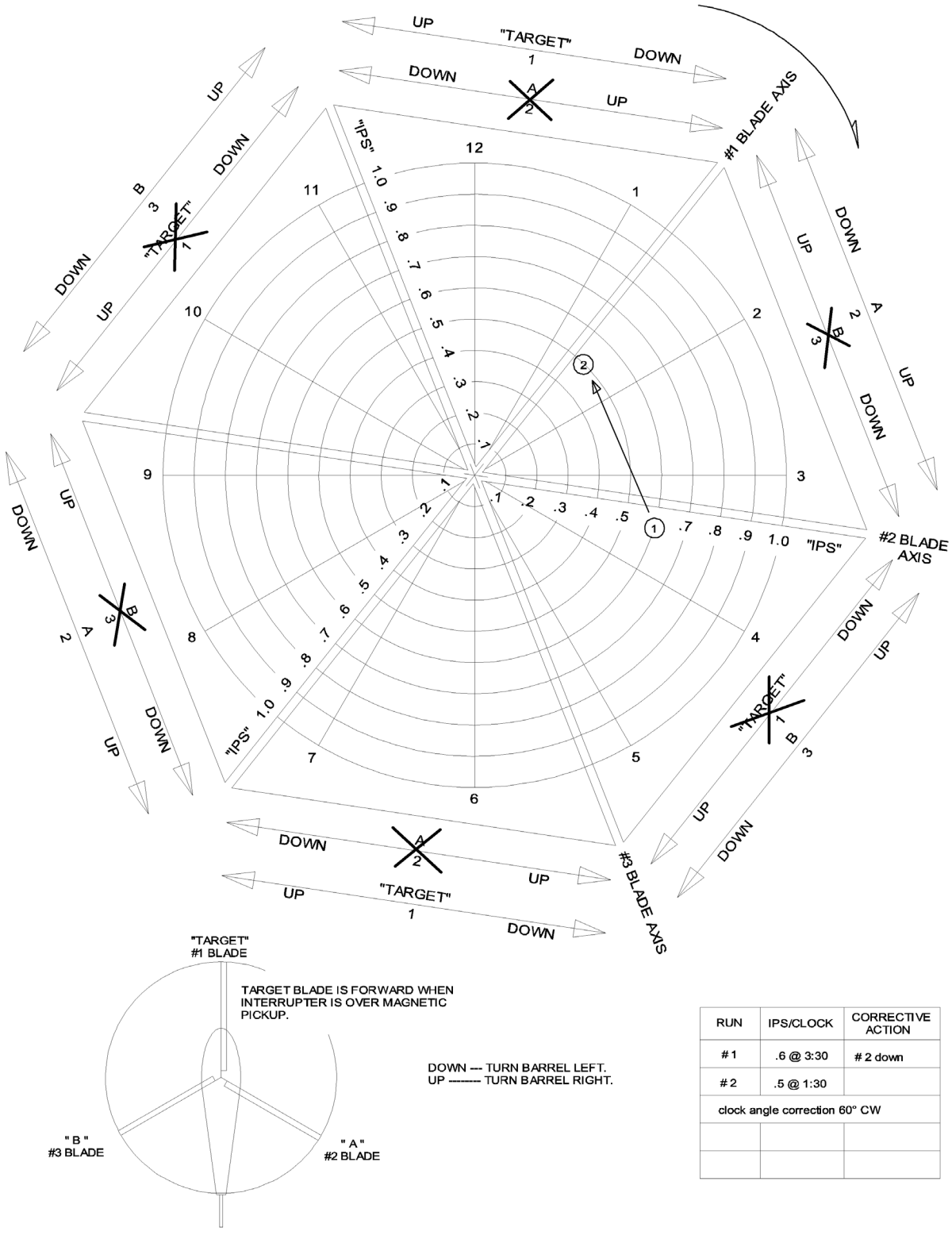

RUN	IPS/CLOCK	CORRECTIVE ACTION
#1	.6 @ 3:30	# 2 down
#2	.5 @ 1:30	
clock angle correction 60° CW		

Figure 12-6.2. Main Rotor Clock Angle Correction Example

UNCONTROLLED COPY WHEN DOWNLOADED OR PRINTED

Visit www.enstromhelicopter.com for instructions to order an original manual and to register for email notification of updates.

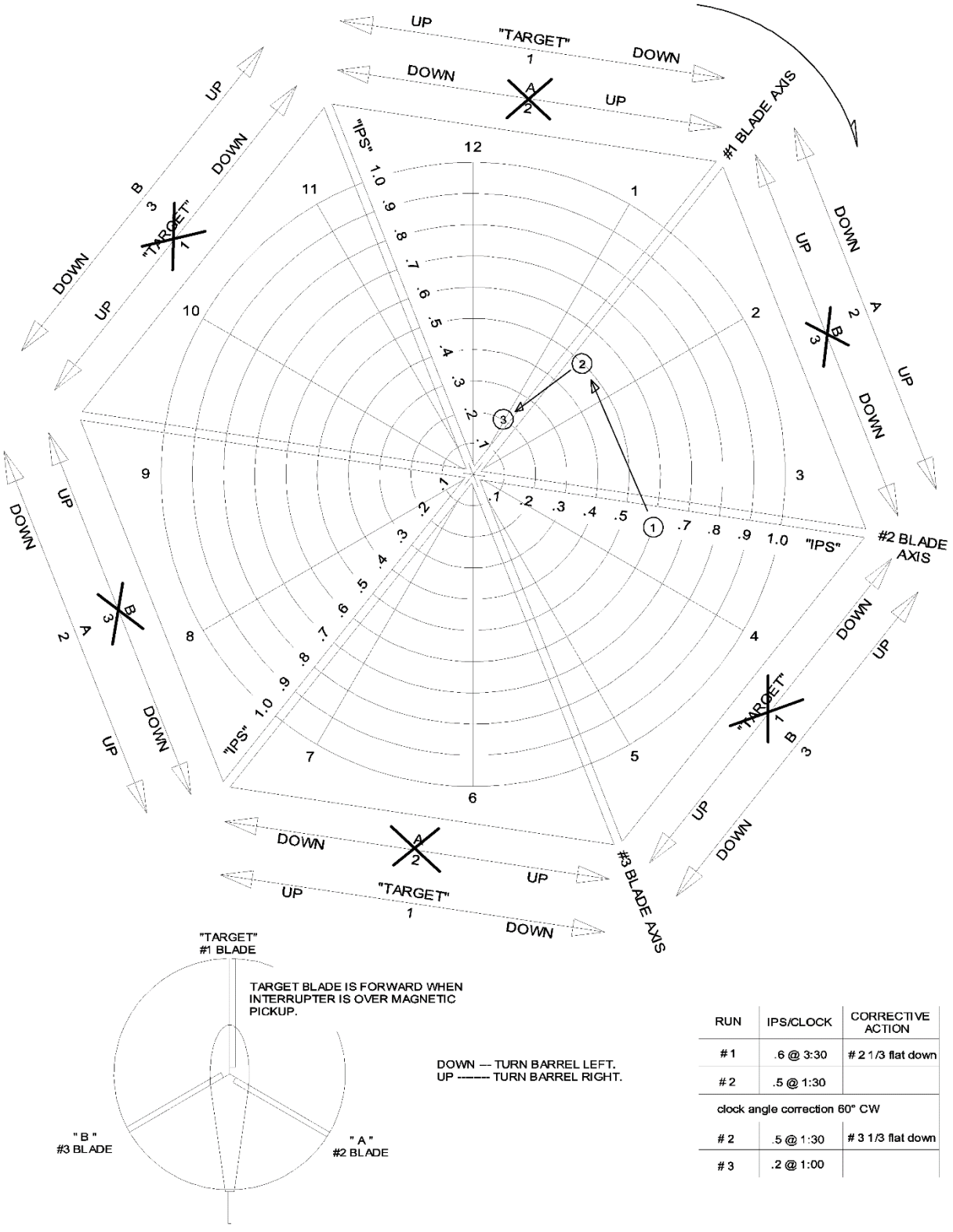

RUN	IPS/CLOCK	CORRECTIVE ACTION
# 1	.6 @ 3:30	# 2 1/3 flat down
# 2	.5 @ 1:30	
clock angle correction 60° CW		
# 2	.5 @ 1:30	# 3 1/3 flat down
# 3	.2 @ 1:00	

Figure 12-6.3. Main Rotor Clock Angle Correction Example

UNCONTROLLED COPY WHEN DOWNLOADED OR PRINTED

Visit www.enstromhelicopter.com for instructions to order an original manual and to register for email notification of updates.

12-3 COLLECTIVE PITCH CONTROL STICK

A. Description

The collective pitch control stick controls rate of climb when pulled upward by increasing the pitch of all three main rotor blades simultaneously and to the same degree. Downward movement of the collective stick decreases the pitch of the blades which decreases lift on the rotor and allows for a controlled descent. The collective pitch control stick is incorporated into the throttle correlator system. This mechanism combines the throttle motion with the collective stick movement such that the proper power inputs are automatically established as the collective stick is moved. The correlator is designed to keep the rotor/engine rpm within the desired green band for the majority of all flight regimes. Friction control is provided on the throttle grip of the collective stick. See Figure 12-7 for locations of the friction control points.

For F-28F S/N 809 through S/N 832 and 280FX S/N 2001 through S/N 2166, the engine starter button is located on the end of the pilot's and co-pilot's collective sticks (if equipped with dual start). Subsequent S/N are equipped with an illuminated control switch box mounted on the forward end of the collective stick. The control box includes the starter button, and forward and aft landing light switches.

B. Removal – Pilot Collective (Figure 12-7)

(1) Remove the fiberglass cowl over the collective stick.

(2) Disconnect the electrical wiring, as applicable.

(a) Disconnect the starter button wires at the the quick disconnect terminals.

(b) (Illuminated collective control only) Disconnect the electrical harness from the electrical connector on the forward side of the seat deck.

(3) Remove bolt (1) connecting the throttle bellcrank to the collective stick

NOTE: Do not disconnect the co-pilot collective linkage or the correlator linkage attached to the throttle bellcrank.

(4) Cut safety wire and remove bolt (2) from the top of the collective bellcrank.

(5) Remove the collective stick from the collective and throttle bellcranks. Keep the DU washer (3) for reinstallation.

C. Installation – Pilot Collective

(1) Install the collective stick into the collective bellcrank and align the holes.

(2) Install washer and bolt (2). Torque bolt and safety (MS20995C32).

(3) Lubricate (Tri-Flow brand or equivalent light viscosity lubricant) DU washer (3) and install on stick with the DU side of the washer facing forward toward grip.

(4) Install the throttle bellcrank and align holes.

UNCONTROLLED COPY WHEN DOWNLOADED OR PRINTED

Visit www.enstromhelicopter.com for instructions to order an original manual and to register for email notification of updates.

(5) Install bolt (1), washers, nut and torque.

(6) Connect the electrical wiring, as applicable.

(a) Connect the wire terminals for the starter button.

(b) (Illuminated collective control only) Connect the electrical harness to the connector on the forward side of the seat deck.

(7) Cycle the collective stick up and down and rotate throttle to check freedom of movement.

(8) Install the fiberglass cowl and screws.

NOTE: Grease or oil build-up on torque tube may cause collective friction to slip. To remedy this problem spray Loctite 7471 Primer T, or equivalent, into slotted area of collective clamp on torque tube until oil is removed.

D. Removal – Copilot Collective

(1) (Illuminated collective control only) Disconnect the electrical harness from the electrical connector on the forward side of the seat deck.

(2) Lift tab of the expando pin (4) to a vertical position and pull to remove.

(3) Remove the co-pilot's stick from collective bellcrank.

E. Installation – Copilot Collective

(1) Align the slot in the end of collective stick with the bolt in the collective bellcrank and slide into place.

(2) Align the expando pin holes and install the pin.

(3) Flip eccentric tab of the expando pin to secure.

(4) (Illuminated collective control only) Connect the electrical harness to the connector on the forward side of the seat deck.

NOTE: To adjust tightness of the expando pin, loosen the set screw on side and rotate the pin to the required tension. Tighten the set screw. The expanding segments must be contained for tight fit.

NOTE: The expando pin can be folded down in one of two different positions but only one position locks it in place. The correct position is the when the cam causes the pin to expand and it is the position that requires the most force to push the lever down.

UNCONTROLLED COPY WHEN DOWNLOADED OR PRINTED

Visit www.enstromhelicopter.com for instructions to order an original manual and to register for email notification of updates.

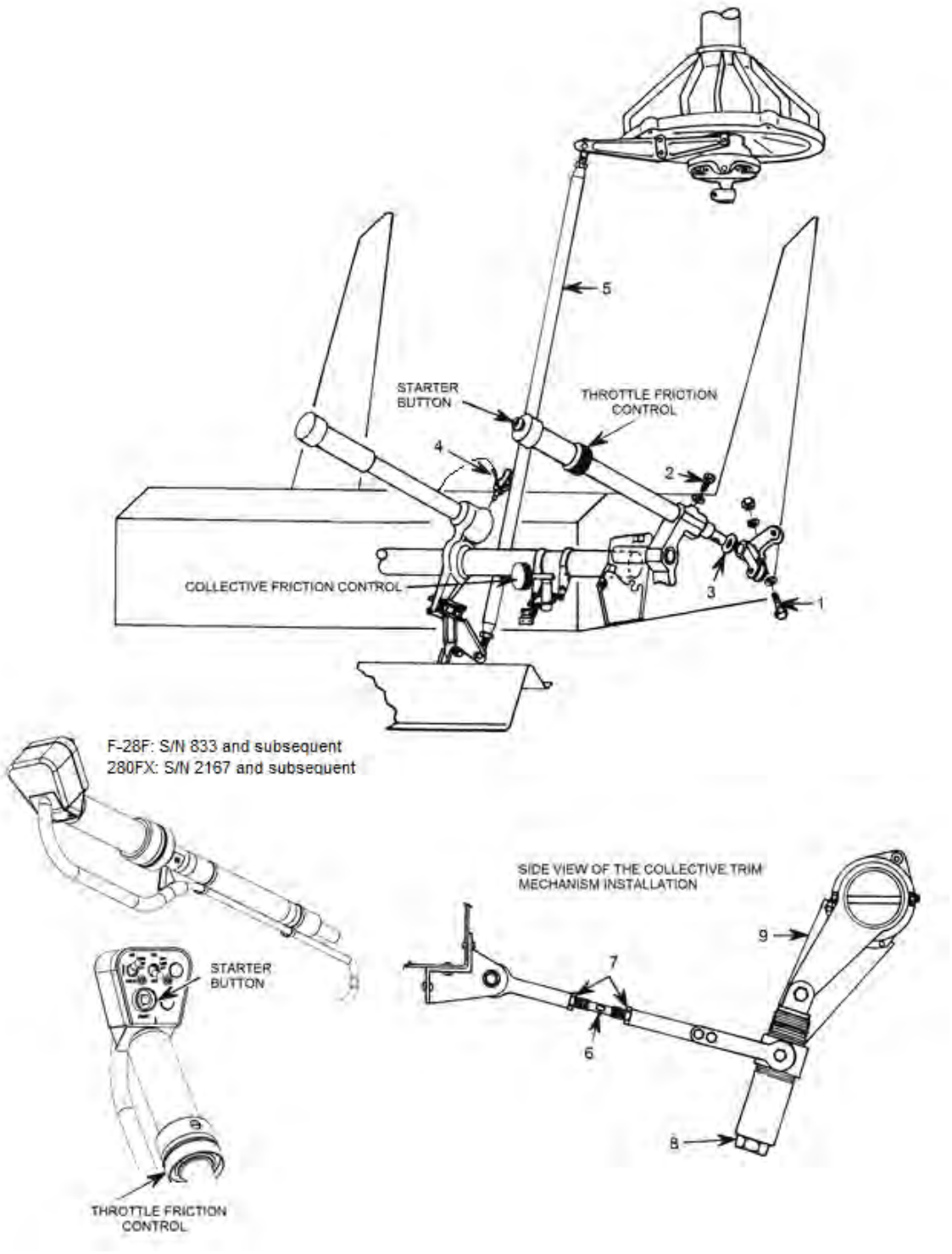

1. Bolt
2. Bolt
3. DU Washer
4. Expando Pin
5. Control Rod
6. Threaded Shaft
7. Check nut
8. Spring Capsule Assembly
9. Pivot Retainer Strap

Figure 12-7. Collective Control System

UNCONTROLLED COPY WHEN DOWNLOADED OR PRINTED

Visit www.enstromhelicopter.com for instructions to order an original manual and to register for email notification of updates.

12-4 COLLECTIVE TRIM SYSTEM

NOTE: Refer to Service Information Letter SIL 0184, latest revision, regarding a collective trim system update to simplify collective balance adjustment.

A. Collective Trim Capsule Removal (Figure 12-9)

(1) Remove the fiberglass seat deck.

(2) With the collective stick down and the spring capsule in compressed position, install special tool T-0022 between bottom of the hex nut and the top of the spring housing.

(3) Secure tool T-0022 in position by wrapping upper end with safety wire (MS20995C32) (Figure 12-8).

(4) Release the collective friction and gently raise the collective so that the capsule is fully extended into tool T-0022.

WARNING: With the spring capsule in compressed position there is approximately 180 lbs of force exerted by the springs. Handle with extreme care.

(5) Remove nuts (1) and washers (2) from the spring capsule pivot (3).

(6) Remove bolts (5), washers (6), and nuts (7) from brackets (4). Remove brackets.

(7) Remove bolt (9), washers (10) and nut (11) from the pivot retainer straps (8). Remove spacer (12).

(8) Slide the pivot retainer straps (8) outboard on torque tube to detach from capsule pivot (3).

NOTE: The pivot retainer straps must rotate freely on the collective torque tube. Lubricate the strap bearing over the torque tube (Tri-Flow brand or equivalent light viscosity lubricant).

(9) Remove bolt (13), nut (15), and washers (14) from the upper end of spring capsule.

(10) Carefully remove the spring capsule assembly.

(11) To remove tie rod assembly from seat, remove bolt (19), washers (14) and (16), spacer (20) and nut (15).

UNCONTROLLED COPY WHEN DOWNLOADED OR PRINTED

Visit www.enstromhelicopter.com for instructions to order an original manual and to register for email notification of updates.



Figure 12-8. Collective Spring Capsule in Holding Tool T-0022
(As removed from the collective trim system)

UNCONTROLLED COPY WHEN DOWNLOADED OR PRINTED

Visit www.enstromhelicopter.com for instructions to order an original manual and to register for email notification of updates.

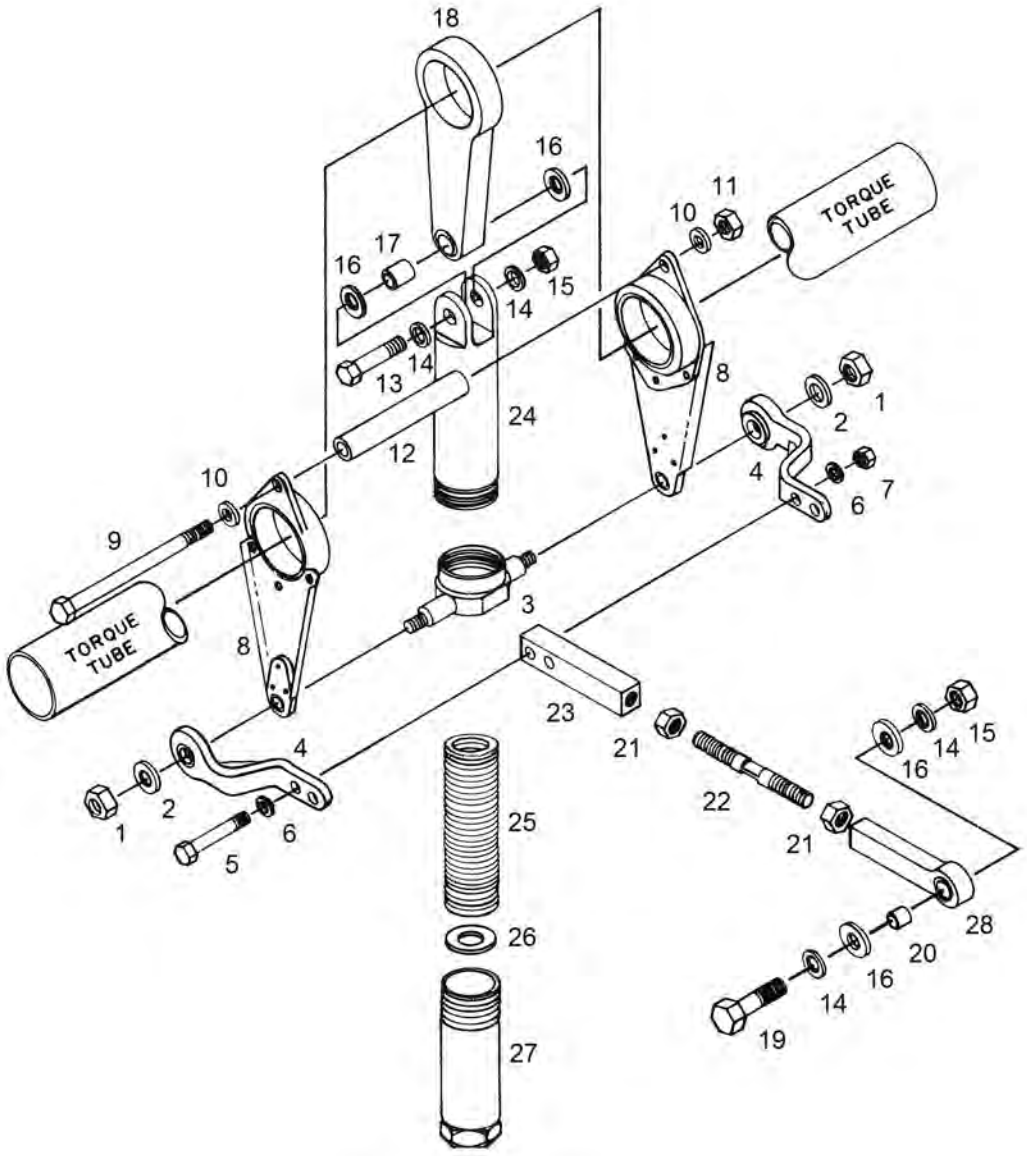

1.	Nut	15.	Nut
2.	Washer	16.	Washer (P/N ECD050-11)
3.	Capsule Pivot	17.	Spacer
4.	Bracket	18.	Bellcrank
5.	Bolt	19.	Bolt
6.	Washer	20.	Spacer
7.	Nut	21.	Check Nut
8.	Pivot Retainer Strap	22.	Tie Rod
9.	Bolt	23.	Link
10.	Washer	24.	Spring Housing
11.	Nut	25.	Spring
12.	Spacer	26.	Washer
13.	Bolt	27.	Spring Retainer
14.	Washer	28.	Link Assembly

Figure 12-9. Collective Trim, Spring Capsule Assembly

UNCONTROLLED COPY WHEN DOWNLOADED OR PRINTED

Visit www.enstromhelicopter.com for instructions to order an original manual and to register for email notification of updates.

B. Collective Trim – Disassembly

(1) Carefully place the spring capsule assembly horizontally between jaws of bench vise.

(2) Cut safety wire from special tool T-0022.

(3) Slowly rotate the vise handle to release spring pressure until all tension is relieved.

(4) Remove spring housing (24), spring (25), washer (26), and spring retainer (27).

(5) Remove the spring capsule pivot (3) from spring retainer (27).

(6) Rod assembly - break torque on the check nuts (21) and turn the link (23) and link assembly (28) to remove from the tie rod (22).

C. Collective Trim – Assembly (Figure 12-9)

(1) Apply grease (MIL-PRF-81322) to spring (25).

(2) Install the spring capsule pivot (3) on spring retainer (27) with 3 to 4 threads extended above spring capsule pivot.

(3) Install washer (26) in the spring retainer (27).

(4) Install spring (25) into spring retainer (27).

(5) Install spring housing (24).

(6) Place tool T-0022 on the spring capsule and carefully compress the capsule in vise until lip of tool locks between the ears of spring housing (24) (Figure 12-8).

WARNING: WITH THE SPRING CAPSULE IN COMPRESSED POSITION, THERE IS APPROXIMATELY 180 LB OF FORCE EXERTED BY THE SPRINGS. HANDLE WITH EXTREME CARE.

(7) With the spring capsule still in the vise, wrap tool T-0022 with safety wire (MS20995C32) to secure in position.

(8) Install check nuts (21) on the tie rod (22).

(9) Install link (23) and link assembly (28) on tie rod (22), leaving the check nuts loose for adjustment.

D. Collective Trim – Installation (Figure 12-9)

NOTE: Lubricate (Tri-Flow brand or equivalent light viscosity lubricant) all DU bushings and washers.

(1) Install bushing (20) into link assembly (28).

(2) Place washers (16) on each side of the link assembly (28) and install assembly into seat mount.

(3) Install bolt (19), washers (14) and nut (15). Torque (30-40 par/3.4-4.5 Nm). Ensure the link assembly (28) pivots in the seat mount.

UNCONTROLLED COPY WHEN DOWNLOADED OR PRINTED

Visit www.enstromhelicopter.com for instructions to order an original manual and to register for email notification of updates.

(4) Install spacer (17) into bellcrank (18).

(5) Place washers (16) on each side of bellcrank (18) and carefully slide the spring capsule assembly into position.

(6) Attach the spring capsule to bellcrank (18) with bolt (13), washers (14), and nut (15). Torque (30-40 in-lb/3.4-4.5 Nm). Ensure the spring capsule rotates in the bellcrank (18).

(7) Slide pivot retainer straps (8) inboard and onto the spring capsule pivots (3).

(8) Install straps (4) onto spring capsule pivots (3).

(9) Place spacer (12) between upper end of the pivot retainer straps (8) and secure in place with bolt (9), washers (10), and nut (11). Torque 12-15 in-lb/1.4-1.7 Nm.

NOTE: Do not over torque bolt (9), as this will cause binding in the system. You must be able to rotate spacer (12) by hand after tightening.

(10) Install washers (2) and nuts (1) and torque (12-15 in-lb/1.4-1.7 Nm). Ensure straps (4) rotate on the capsule pivot (3).

(11) Install bolts (5) with washers (6) through brackets (4) and link (23). Adjustment of shaft (22) may be required to align bolt holes for the brackets. Install nuts (7) and torque (12-15 in-lb/1.4-1.7 Nm).

(12) Cut safety wire and remove tool T-0022.

E. Collective Trim – Rigging (Figure 12-7)

NOTE: Rigging adjustments to be made with collective stick in down position.

(1) Adjust threaded shaft (6) so the upper end of the spring capsule assembly (8) is slightly aft of the forward edge of the pivot retainer straps (9).

(2) Adjust the lower end of the spring capsule assembly (8) to balance out pilot's collective force load in flight.

NOTE: When correct adjustment is complete, the collective stick should stay in full down position with collective friction released. Collective should also have equal pressure in both directions of travel in flight.

CAUTION: FOR HELICOPTERS WITH T-T STRAPS, THE COLLECTIVE WILL NORMALLY STAY DOWN WITH THE BLADES TURNING.

NOTE: The most common adjustment is to set the length of the tie rod assembly (21, 22, 23, 28) so that the neutral position of the collective is at about 20% travel. At below 20% collective travel, the spring capsule pushes the collective down, and at above 20%, the spring capsule pushes the collective up. The spring retainer (27) is set properly if an equal number of threads are above and below the capsule pivot (3).

UNCONTROLLED COPY WHEN DOWNLOADED OR PRINTED

Visit www.enstromhelicopter.com for instructions to order an original manual and to register for email notification of updates.

NOTE: If needed, contact Enstrom Product Support for additional assistance regarding collective trim adjustments.

(a) To correct for an out-of-balance condition, a light collective (easier up than down), release tension on the spring in the trim capsule.

(b) For a heavy collective, increase spring tension.

(3) Secure checknuts (7) against link (23) and link assembly (28).

12-5 CYCLIC PITCH CONTROL STICK

A. Description

The cyclic stick controls the movement of the helicopter forward, aft, left and right while in flight. Longitudinal control is obtained by the forward or aft motion of the cyclic stick, which causes the swashplate to tilt forward or aft at a 45° angle to the ship centerline, resulting in a variable pitch change of each rotor blade per revolution. With the swashplate in a forward angle, the rotor blades assume a higher pitch angle in the retreating sector of the plane of rotation, and a lower pitch angle to the advancing sector. This causes the blades to fly low in front and high in back, thus inducing a forward thrust component in the rotor system. This will cause forward flight at the desired speed when coordinated with the proper application of collective pitch and throttle. Rearward or lateral flight is similarly accomplished by moving the cyclic stick in the appropriate direction. The cyclic control stick has a grip that contains a cyclic trim switch, to reduce stick loads during flight

B. Cyclic Stick – Removal

(1) Disconnect the snap fasteners and remove boots.

(2) Disconnect the cannon plug from receptacle.

(3) Remove the two bolts connecting cyclic stick to bellcrank.

(4) Remove the stick assembly.

C. Cyclic Stick – Installation

(1) Install the cyclic stick on bellcrank.

(2) Install bolts, washers and nuts and torque.

(3) Connect the cannon plug to seat receptacle.

(4) Install the boot and snap fasteners.

UNCONTROLLED COPY WHEN DOWNLOADED OR PRINTED

Visit www.enstromhelicopter.com for instructions to order an original manual and to register for email notification of updates.

12-6 LATERAL AND LONGITUDINAL TRIM ACTUATORS

A. Troubleshooting

Problem	Possible Cause	Action
Trim Actuator Inoperative	(1) Faulty motor (2) Faulty microswitch (3) Spring capsule binding on acme shaft (4) Binding of internal gears	Remove the actuator assembly. Troubleshoot in the following order to determine which area is causing problem. (1) Disconnect wires and remove the motor. Test motor with 12V or 24V battery for operation. (2) Remove microswitch assembly and inspect switches. (3) Rotate spring capsule on acme shaft and check for freedom of movement for full travel. (4) Remove rubber coupling and rotate internal gears with screw-driver to check for freedom of movement.

B. Removal – Lateral Trim Actuator (Figure 12-10)

(1) Identify wires and their location before disconnecting from microswitches.

(2) (12V) Disconnect wires from microswitches and from the quick disconnect attached to ground wire.

(3) (24V) Disconnect trim actuator electrical connector from the trim switch unit (TSU).

(4) Remove bolt (3), light washers (4), and nut (6) from the spring capsule (2).

(5) Remove bolt (7), washers (4), and nut (6) from the housing (1).

(6) Remove the lateral trim actuator from the seat structure.

(7) Remove spacers (8) from housing (1).

(8) Remove spacer (13) from the spring capsule (2).

UNCONTROLLED COPY WHEN DOWNLOADED OR PRINTED

Visit www.enstromhelicopter.com for instructions to order an original manual and to register for email notification of updates.

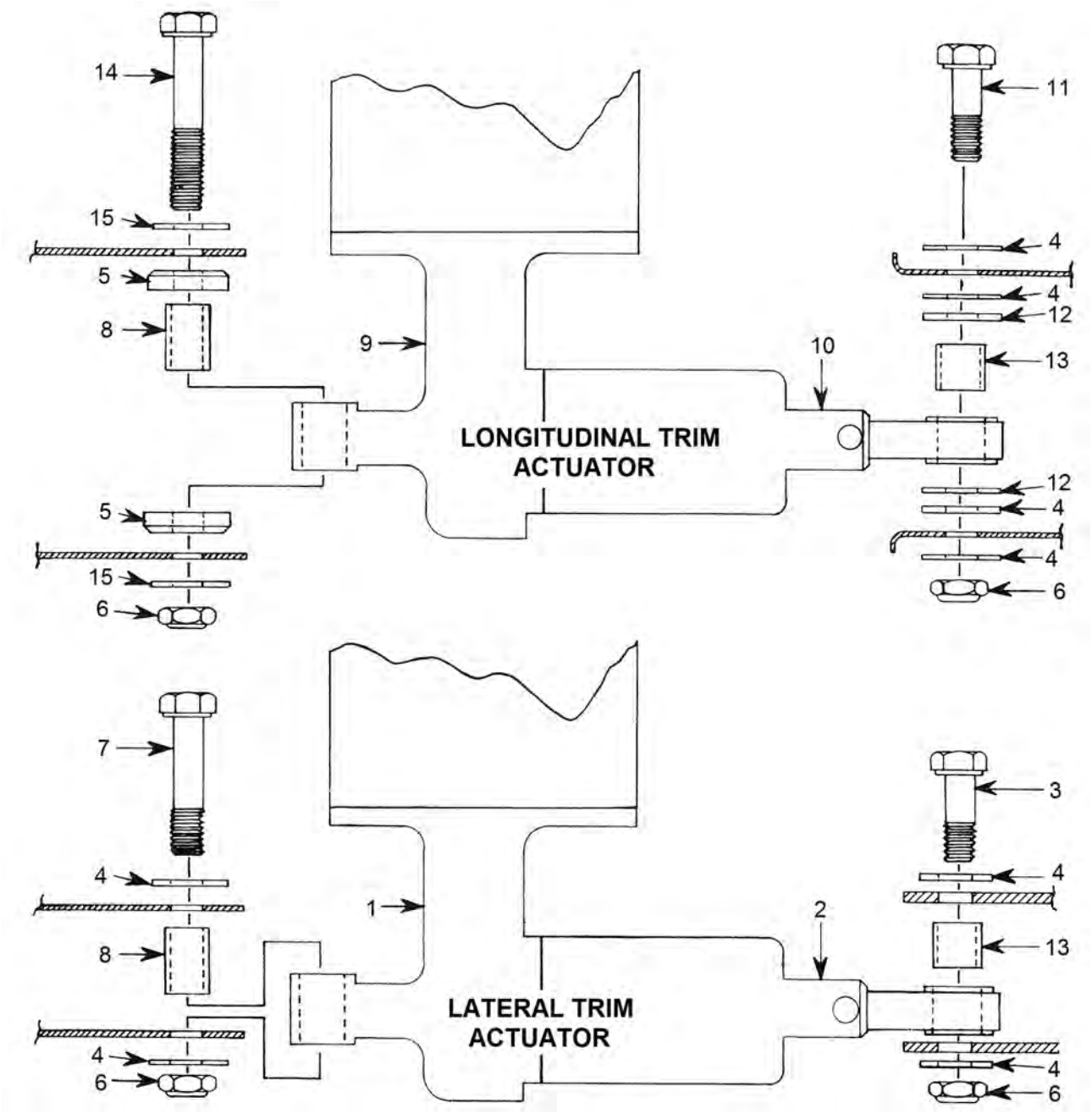

1. Housing
2. Spring Capsule
3. Bolt
4. Light Washer (P/N ECD050-11)
5. Spacer
6. Nut
7. Bolt
8. Spacer
9. Housing
10. Spring Capsule
11. Bolt
12. Heavy Washer
13. Spacer
14. Bolt
15. Washer

Figure 12-10. Trim Motor Installation

UNCONTROLLED COPY WHEN DOWNLOADED OR PRINTED

Visit www.enstromhelicopter.com for instructions to order an original manual and to register for email notification of updates.

C. Removal – Longitudinal Trim Actuator (Figure 12-10)

(1) Identify wires and their location before disconnecting from the microswitches.

(2) (12V) Disconnect wires from the microswitches and from the quick disconnect attached to ground wire.

(3) (24V) Disconnect the trim actuator electrical connector from TSU.

(4) Remove bolt (11), light washers (4), heavy washers (12), and nut (6) from the spring capsule (10).

(5) Remove bolt (14), harper washers (15), spacers (5), and nut (6) from the housing (9).

(6) Remove the longitudinal trim actuator from the seat structure.

(7) Remove spacer (8) from the housing (9).

(8) Remove spacer (13) from the spring capsule (10).

D. Disassembly – Trim Actuators (Figure 12-11)

(1) Separate the wire leads to the microswitch and disconnect.

(2) Remove screws (1) and washers (2) attaching the switch assembly. Remove the switch assembly.

(3) Rotate the spring capsule assembly (5) to remove from the acme shaft.

(4) Remove nuts (13), lockwasher (12) and washer (11) from motor (7). Remove the motor.

(5) Remove coupling (8) and snap ring (9).

(6) Remove the remaining screws (1) and washers (2) from the shaft and cover assembly (6).

(7) Gently tap the cover to one side and pull the acme shaft to remove the shaft and cover assembly (6) from the housing (4).

(8) Tap face of housing (4) against work bench to remove the worm gear assembly (10).

E. Trim Actuator Part Replacement

NOTE: After determining which part of the trim actuator is causing a malfunction, replace the applicable item as follows:

(1) Microswitch - remove the two screws and washers holding the switch in place and remove switch. Install new switch and replace the screws.

UNCONTROLLED COPY WHEN DOWNLOADED OR PRINTED

Visit www.enstromhelicopter.com for instructions to order an original manual and to register for email notification of updates.

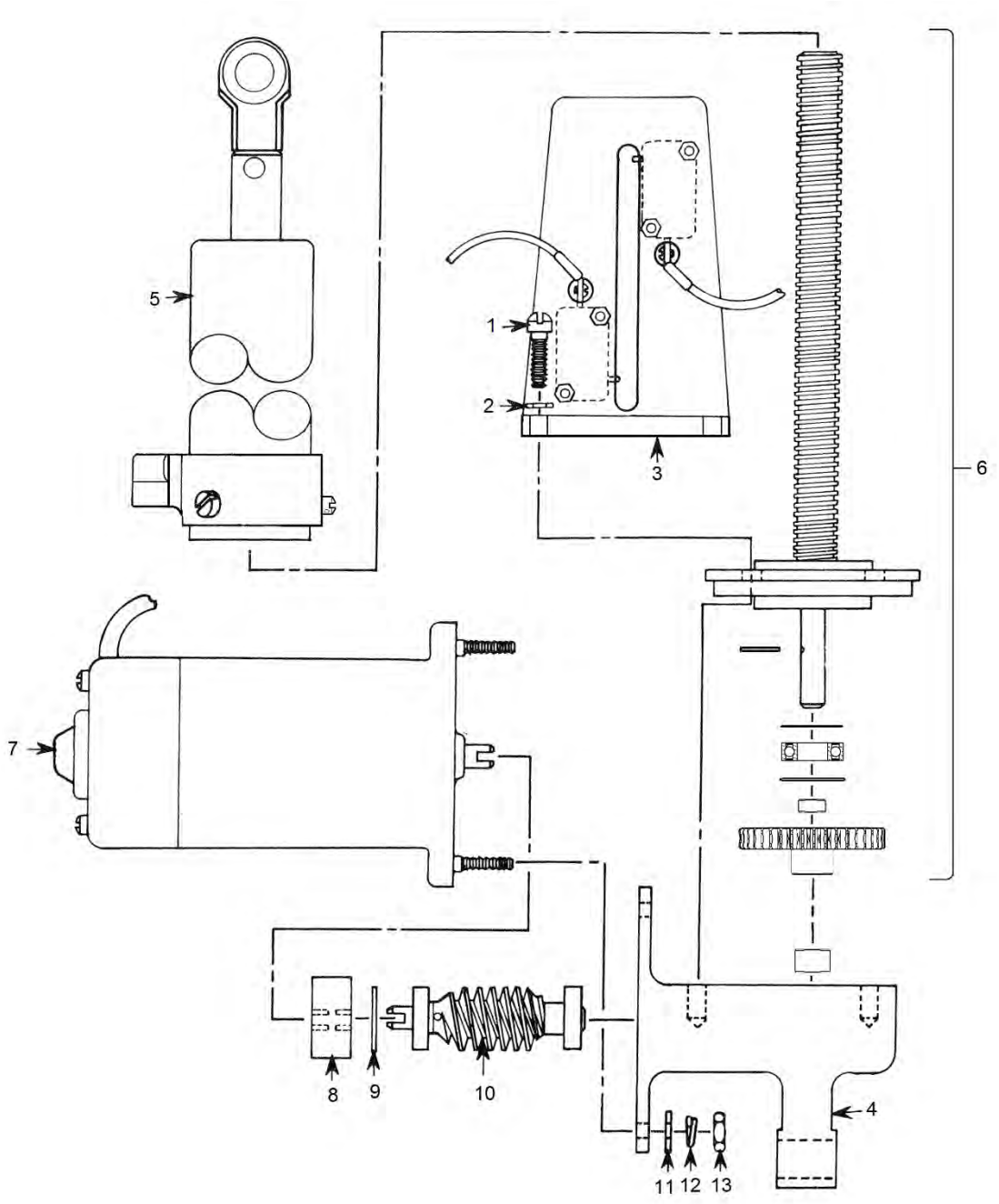

1.	Screw	8.	Coupling
2.	Washer	9.	Snap Ring
3.	Switch Assembly	10.	Worm Gear Assembly
4.	Housing	11.	Washer
5.	Spring Capsule Assembly	12.	Lock Washer
6.	(ACME) Shaft and Cover Assembly	13.	Nut
7.	Motor		

Figure 12-11. Trim Motor Assembly

UNCONTROLLED COPY WHEN DOWNLOADED OR PRINTED

Visit www.enstromhelicopter.com for instructions to order an original manual and to register for email notification of updates.

(2) Spring capsule assembly – Acme nut replacement is accomplished by removing the three screws at base of capsule. Remove and replace nut. Reinstall the switch activator and screws to the base of the capsule.

The rubber bumper at base of capsule is attached by applying contact cement adhesive to both the bumper and acme nut. Press bumper firmly into place

(3) Cover and acme shaft assembly, worm gear assembly, and motor assembly are replaced as assembly units.

F. Assembly – Trim Actuator (Figure 12-11)

(1) Install the worm gear assembly (10) into the housing (4) until the aft bearing is aligned with the bearing seat in the housing. Do not install into the bearing seat at this time.

(2) Apply grease (MIL-PRF-81322) in housing (4), packing the grease against the outer walls and the worm gear.

(3) Install cover and shaft assembly (6) into housing (4) with the cover turned to side exposing worm gear (10).

(4) With the cover seated in housing, push the worm gear assembly (10) into place, seating the bearings in place, and install the snap ring (9).

(5) Rotate the cover into position and install two screws (1) and washers (2) in the cover holes located opposite the worm gear.

(6) Rotate the worm gear with a screwdriver to check for binding in gears.

(7) Install the coupling (8) onto slotted end of worm gear.

(8) Align the slots in motor with the coupling and install the motor into position on the housing (4).

(9) Install washer (11), lockwasher (12) and nut (13) on the motor studs and torque.

(10) Apply grease (MIL-PRF-81322) to the threads of the acme shaft and turn the spring capsule (5) onto the acme shaft until the rubber bumper at the base of the spring capsule is approximately one inch from the cover.

(11) Turn the switch activator of spring capsule to align with slot in the microswitch assembly (3) and attach to housing (4) using screws (1) and washers (2).

(12) Torque the screws and lockwire (MS20995C32).

(13) Connect wires to the switch.

UNCONTROLLED COPY WHEN DOWNLOADED OR PRINTED

Visit www.enstromhelicopter.com for instructions to order an original manual and to register for email notification of updates.

G. Installation – Lateral Trim Actuator (Figure 12-10)

(1) Install spacer (8) into housing (1).

(2) Install spacer (5) into spring capsule (2).

(3) Install the actuator assembly into the seat structure and align with mounts.

(4) Install bolt (7) through light washer (4), seat structure mount and spacer (8).

(5) Install light washer (4) and nut (6).

(6) Install bolt (3) through washer (4), seat structure mount and spacer (5).

(7) Install light washer (4) and nut (6). Torque nuts (6) in two places.

(8) (12V) Connect wires at ground and microswitches.

(9) (24V) Connect the electrical connector to the TSU.

(10) Test the trim actuator and trim limits (Para. 12-6, I) for freedom of movement and full travel in both directions.

H. Installation – Longitudinal Trim Actuator (Figure 12-10)

(1) Install spacer (17) into housing (9).

(2) Install spacer (13) into spring capsule (10).

(3) Install the actuator assembly into the seat structure and align with mounts.

(4) Install spacers (16) on each side of housing (9) with the chamfered side of spacer facing outboard.

(5) Install bolt (14) through harper washer (15), seat structure, and spacers (16) and (17).

(6) Install harper washer (15) and nut (6).

(7) Install a heavy washer (12) and light washer (4) on each side of the spring capsule (10).

(8) Install bolt (11) through washers (4), seat structure, washers (12), and spacer (13).

(9) Install washer (4) and nut (6). Torque nuts (6) in two places.

(10) (12V) Connect wires at ground and microswitches.

(11) (24V) Connect the electrical connector to the TSU.

(12) Test the trim actuator and trim limits (Para. 12-6, I) for freedom of movement and full travel in both directions

UNCONTROLLED COPY WHEN DOWNLOADED OR PRINTED

Visit www.enstromhelicopter.com for instructions to order an original manual and to register for email notification of updates.

I. Trim Limit Operational Check

(1) Verify the trim operates in the correct direction.

(2) Cycle each time actuator full travel each direction to verify the limit switches work properly.

(3) Trim the cyclic full forward and verify the travel is not restricted in any direction.

(4) Repeat Step 2 for the other three directions.

(5) Return the trim to neutral (center the cyclic).

12-7 FLIGHT CONTROL RIGGING

NOTE: Cyclic and collective rigging must be done in sequence starting with the cyclic pitch controls. A rigging check must be accomplished any time components of the control system have been removed and exact dimensions such as rod lengths or bellcrank angles are not available prior to re-installation of that component.

NOTE: An inspection of the upper cabin mounts and security of installation and inspection of the lateral and longitudinal control rods should be performed during the Preliminary Rigging procedure.

NOTE: Install the connecting rod ends during rigging as follows:

1. HMVV5M right hand rod end to the right, top, and aft.
2. HMLVV5M left hand rod end to the left, bottom, and forward.

A. Preliminary Rigging (Figure 12-12)

(1) Level the helicopter with reference to the lower left hand and forward pylon bay tubes.

(2) Remove the fiberglass seat deck and flooring panels.

(3) Remove the side cowling panels above the engine compartment.

(4) Inspect the upper cabin mounts for cracks (Para. 12-7, F).

(5) Disconnect control rods (13) and (14) from bellcranks (9) and (11).

B. Cyclic Rigging – Seat Deck Area (Figure 12-12)

(1) Adjust rod (1) connecting the cyclic stick bellcranks until the bellcranks (17) and (18) are centered laterally in the stop ring hole. Secure the check nuts.

(a) Adjustment check - move the cyclic stick full left and full right to assure both bellcranks (17) and (18) hit the stops

CAUTION: CHECK INSPECTION HOLES IN CONTROL RODS FOR MINIMUM THREAD ENGAGEMENT OF ROD ENDS. ROD END BEARINGS MUST BE CENTERED BETWEEN THE BELLCRANK EARS TO ALLOW FULL PIVOT AFTER CHECK NUTS HAVE BEEN TIGHTENED.

(2) Adjust rod (5) until the outboard edge of bellcrank (2) and the inboard edge of bellcrank (4) are parallel to each other and perpendicular to the firewall. Secure the jam nuts.

UNCONTROLLED COPY WHEN DOWNLOADED OR PRINTED

Visit www.enstromhelicopter.com for instructions to order an original manual and to register for email notification of updates.

NOTE: When adjusting rod (5), the left hand rod end HMLVV5M must be adjusted one turn past witness hole and secured. All adjustments must be made by rotating the right hand rod end only.

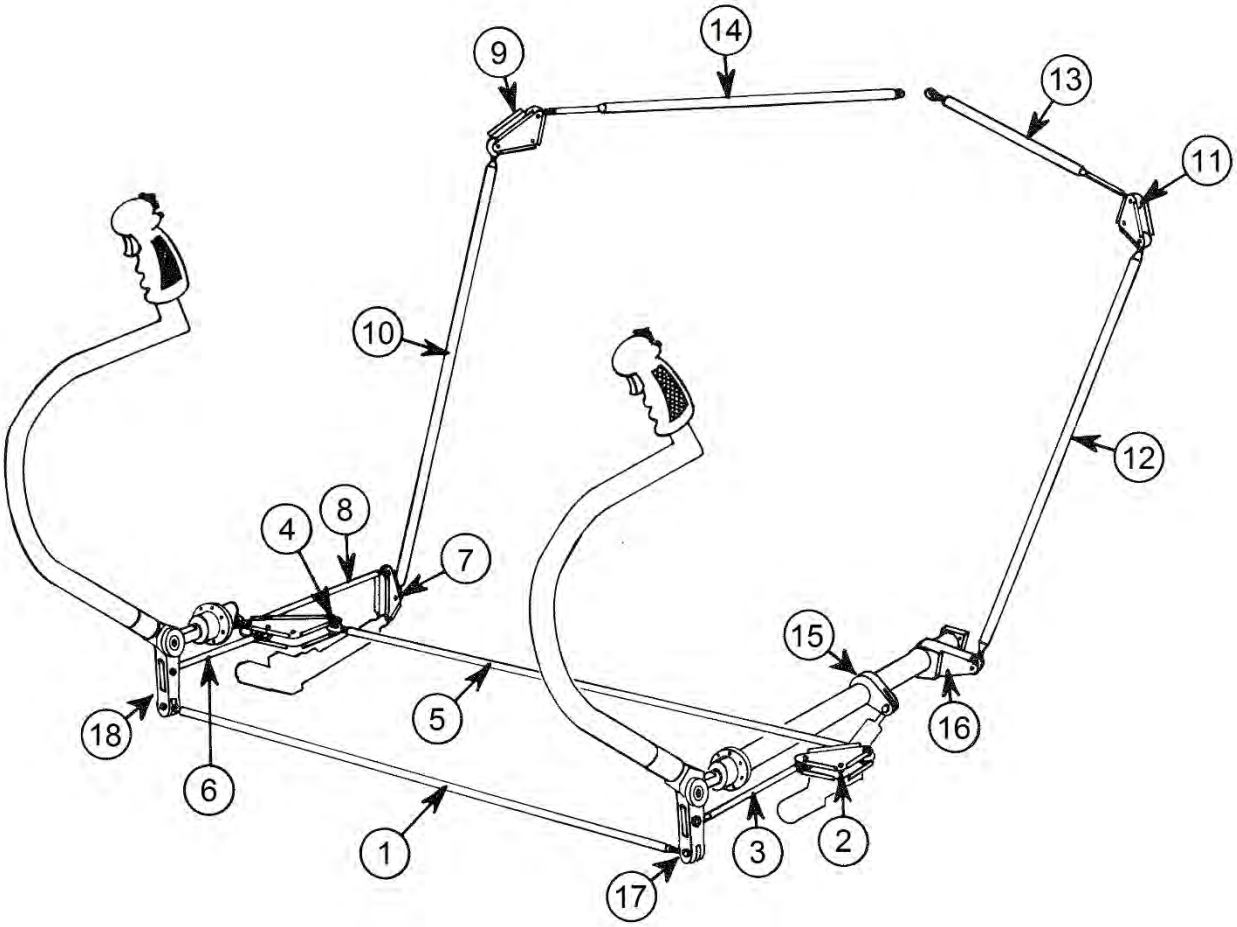

1.	Push-Pull Rod Assembly	10.	Push-Pull Rod Assembly
2.	Bellcrank Assembly	11.	Bellcrank Assembly
3.	Push-Pull Rod	12.	Push-Pull Rod Assembly
4.	Rod End	13.	Push-Pull Rod Assembly
5.	Push-Pull Rod Assembly	14.	Push-Pull Rod Assembly
6.	Push-Pull Rod	15.	Cyclic Torque Tube Assembly
7.	Bellcrank	16.	Bellcrank
8.	Push-Pull Rod	17.	Bellcrank
9.	Bellcrank Assembly	18.	Bellcrank

Figure 12-12. Cyclic Rigging Chart

UNCONTROLLED COPY WHEN DOWNLOADED OR PRINTED

Visit www.enstromhelicopter.com for instructions to order an original manual and to register for email notification of updates.

(3) Move the cyclic stick full forward and adjust rods (3) and (6) until both bellcranks (17) and (18) hit the stop ring.

(a) Adjustment check - Pull the cyclic stick aft to assure the bellcranks are hitting the stops. Adjust if necessary.

(4) Secure jam nuts and move the cyclic stick laterally to assure the rod ends do not bind.

(a) Adjustment check - Rotate the pilot's cyclic stick around the cyclic stop ring. Check that both left and right bellcranks maintain contact with the stop ring through 360 degrees of travel.

NOTE: If binding or interference exists, make slight adjustments to the rod lengths or reposition the rod end bearings to correct the condition.

(5) Install cyclic centering tool T-1775 in the stop ring (Figure 12-13).

(6) Position bellcrank (7) by adjusting length of rod (8). Secure check nuts.

(a) Adjustment check - Remove centering tool T-1775 and move cyclic stick fore and aft to check rod end and check nut clearance to bellcrank.

(7) Place the pilot's cyclic stick in the full forward position (bellcrank aft against stop) and centered laterally. Adjust rod (10) such that the lower edge of bellcrank (9) is parallel to its cabin mount (Figure 12-14). Secure check nuts.

(a) Adjustment check - Cycle to check for interference.

(8) Connect longitudinal trim actuator to bellcrank (7) if disconnected (Para. 12-6, H).

(9) Place the pilot's cyclic stick in the full left position and centered longitudinally. Adjust rod (12) such that the lower edge of bellcrank (11) is parallel to its cabin mount (Figure 12-14). Secure check.

(a) Adjustment check - Cycle to check for interference.

NOTE: Recheck security of all check nuts and rod end clearances.

C. Collective Rigging – Seat Deck Area (Figure 12-7)

(1) Place the collective control stick in full down position and tighten friction.

(2) Adjust rod (5) to obtain 1/8" to 3/16" clearance between the collective bearing housing spacer and swashplate mount flange (Figure 12-15). Secure check nuts.

UNCONTROLLED COPY WHEN DOWNLOADED OR PRINTED

Visit www.enstromhelicopter.com for instructions to order an original manual and to register for email notification of updates.

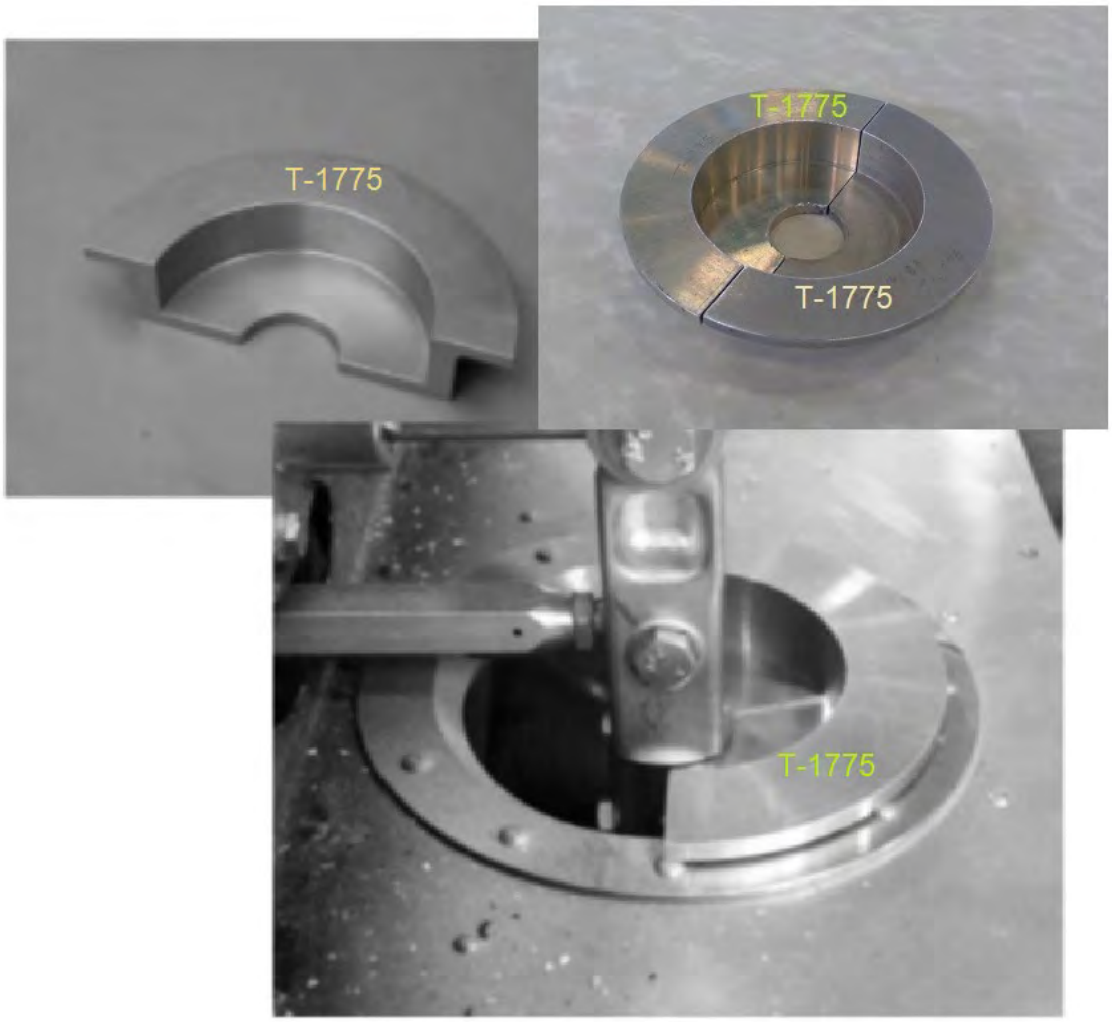

NOTE: Both halves of Tool T-1775 are sold in pairs on the Enstrom website.

Figure 12-13. Cyclic Stick Rigging, Tool T-1775 Installed

UNCONTROLLED COPY WHEN DOWNLOADED OR PRINTED

Visit www.enstromhelicopter.com for instructions to order an original manual and to register for email notification of updates.

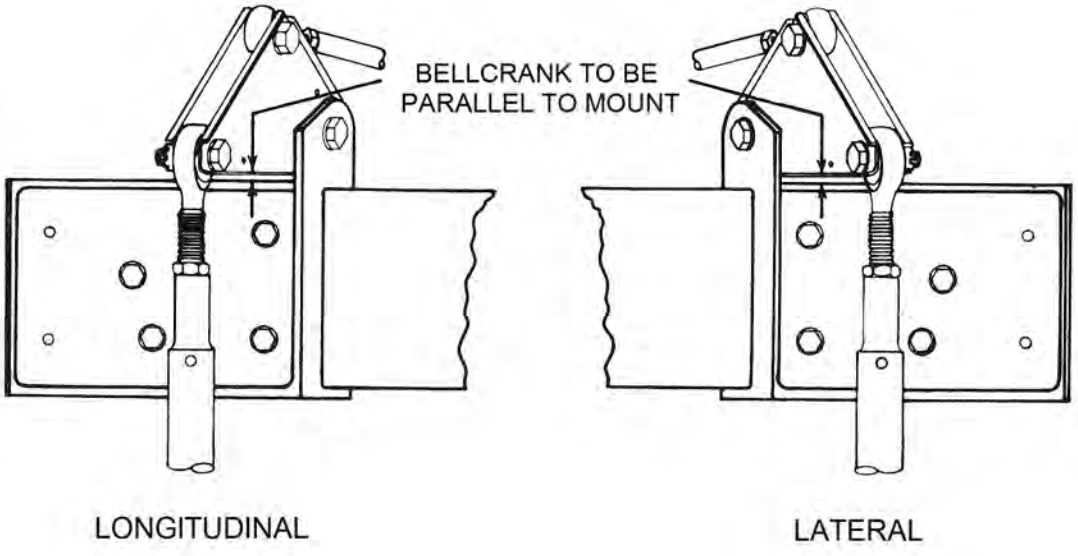

Figure 12-14. Cyclic Bellcranks Parallel to Mount

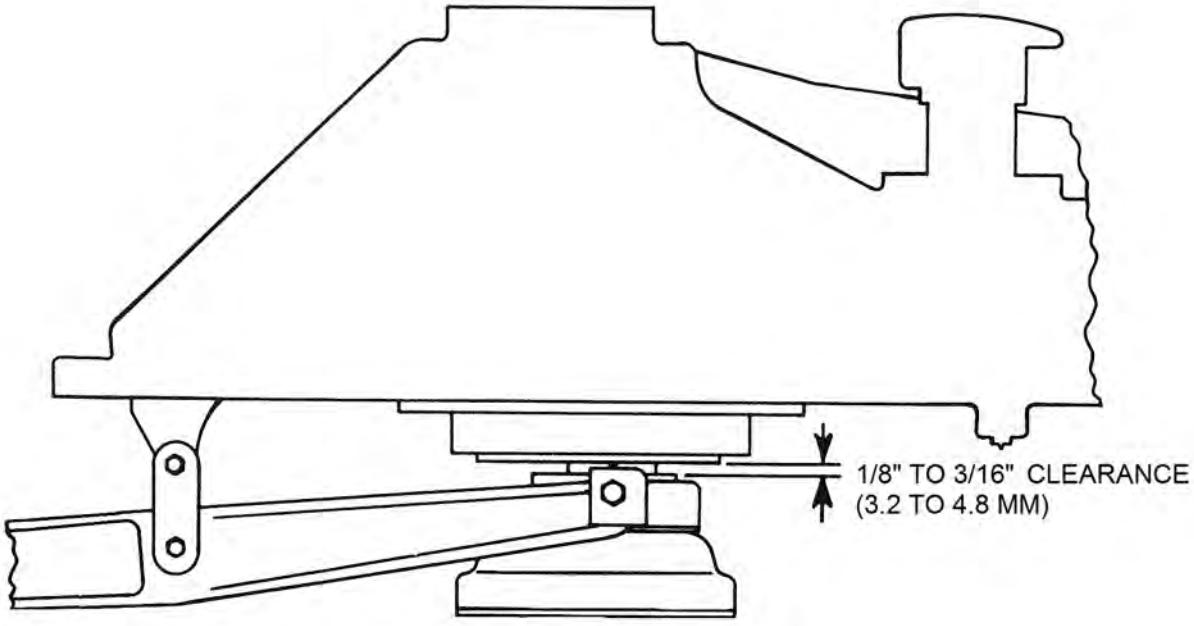

Figure 12-15. Collective Housing to Seal Housing Clearance

UNCONTROLLED COPY WHEN DOWNLOADED OR PRINTED

Visit www.enstromhelicopter.com for instructions to order an original manual and to register for email notification of updates.

D. Cyclic Rigging – To Swashplate

(1) Install rigging tool T-1775 in the cyclic stop ring (Figure 12-13).

NOTE: Run the trim motors to slightly preload cyclic stick against tool.

(2) Install swashplate centering tools T-1575 to hold the swashplate perpendicular to the main rotor shaft (Figure 12-16).

(3) Connect rod (13) to the swashplate. Adjust the length of rod (13) until the attachment bolt slides freely into the bellcrank (11) (Figure 12-12). Install spacers and mount hardware. Secure the check nuts and hardware. See Para. 12-10, E, for hardware attachment to the swashplate.

(4) Connect rod (14) to the swashplate. Adjust the left hand rod end HMLVV5M at bellcrank (9) (Figure 12-12) until the attachment bolt slides freely into the bellcrank. Install spacers and mount hardware. Secure the check nuts and hardware. See Para. 12-10, E, for hardware attachment to the swashplate.

E. Main Rotor Hub – Cyclic and Collective Rigging

(1) Level the aircraft along pylon bay tube inside the left engine door. Install the tripod stand under the tail rotor guard to hold ship level.

NOTE: Avoid standing on or sitting in the aircraft after leveling.

(2) Phase main rotor blades 120° apart. This is accomplished by moving each blade grip until one inch of the damper piston shaft is exposed on each damper.

(3) Rotate the main rotor hub until #1 grip is at the 97° azimuth position (Figure 12-17).

NOTE: The 90° position is to the right side of the helicopter. The 97° position may be checked by observing that the dog leg rod end bearing controlling the #1 blade is directly over and in line with rod (14) of Figure 12-12, Cyclic Rigging.

(4) Place a digital protractor on the top flat area of the main rotor blade grip. Adjust the pitch change link to obtain 6.5 degrees ± .5 degree. Center the rod end bearings for full pivot and secure check nuts.

NOTE: Protractor will be positioned perpendicular to the leading edge of the blade.

(5) Repeat the sequence for blades 2 and 3. Recheck #1 blade.

(6) Remove tool T-1575.

(7) Place the collective control stick in full up position.

UNCONTROLLED COPY WHEN DOWNLOADED OR PRINTED

Visit www.enstromhelicopter.com for instructions to order an original manual and to register for email notification of updates.

(8) Rotate #1 blade to the 97° azimuth position (Figure 12-17).

(9) Set protractor at +19° and position it on top of the flat area of the blade grip. Adjust the collective up stop at the seat deck until the bubble is centered, giving +19 degrees ± .5 degree. Secure the collective up-stop check nut.

(10) Remove tool T-1775.

NOTE: Use of tool T-1775 is depicted in Figure 12-16. Tool T-28-16101 may also be used for swashplate rigging, which is depicted in Figure 12-16.1.

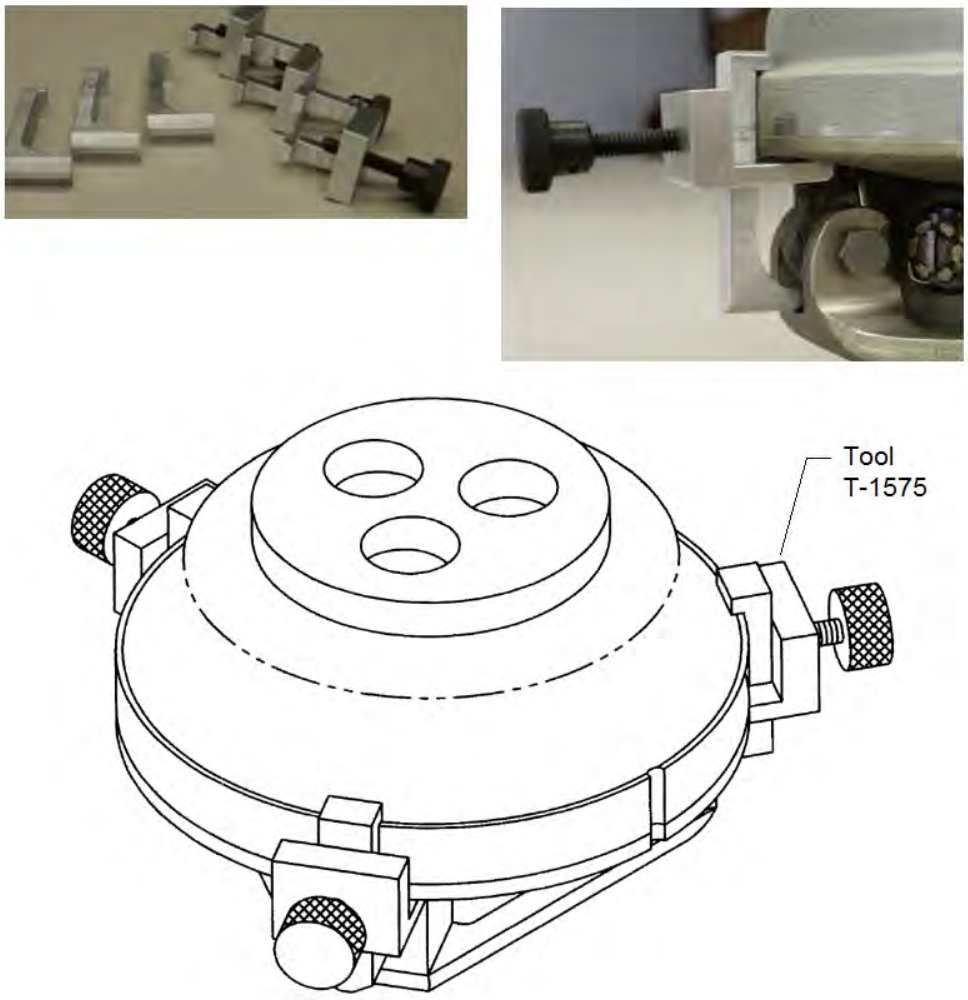

Figure 12-16. Installation of Swashplate Rigging Tool T-1575

UNCONTROLLED COPY WHEN DOWNLOADED OR PRINTED

Visit www.enstromhelicopter.com for instructions to order an original manual and to register for email notification of updates.

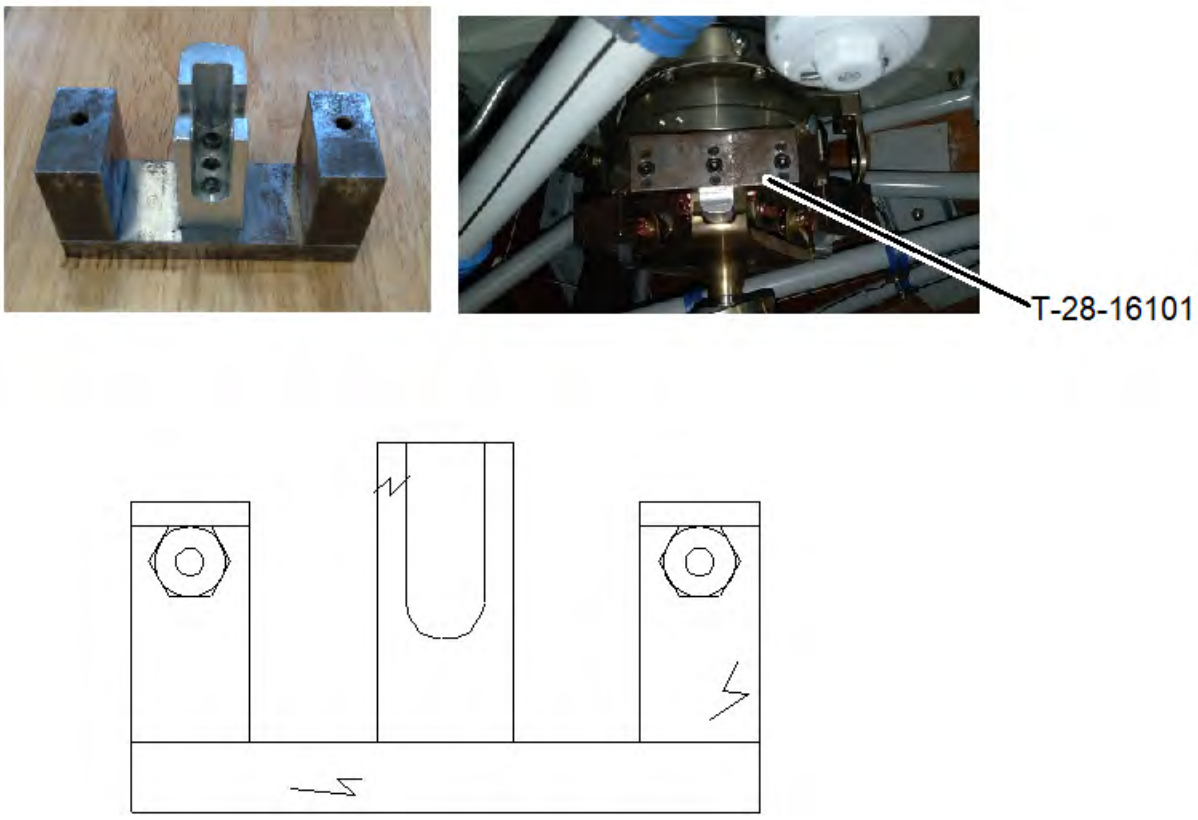

Figure 12-16.1. Installation of Swashplate Rigging Tool T-28-16101

UNCONTROLLED COPY WHEN DOWNLOADED OR PRINTED

Visit www.enstromhelicopter.com for instructions to order an original manual and to register for email notification of updates.

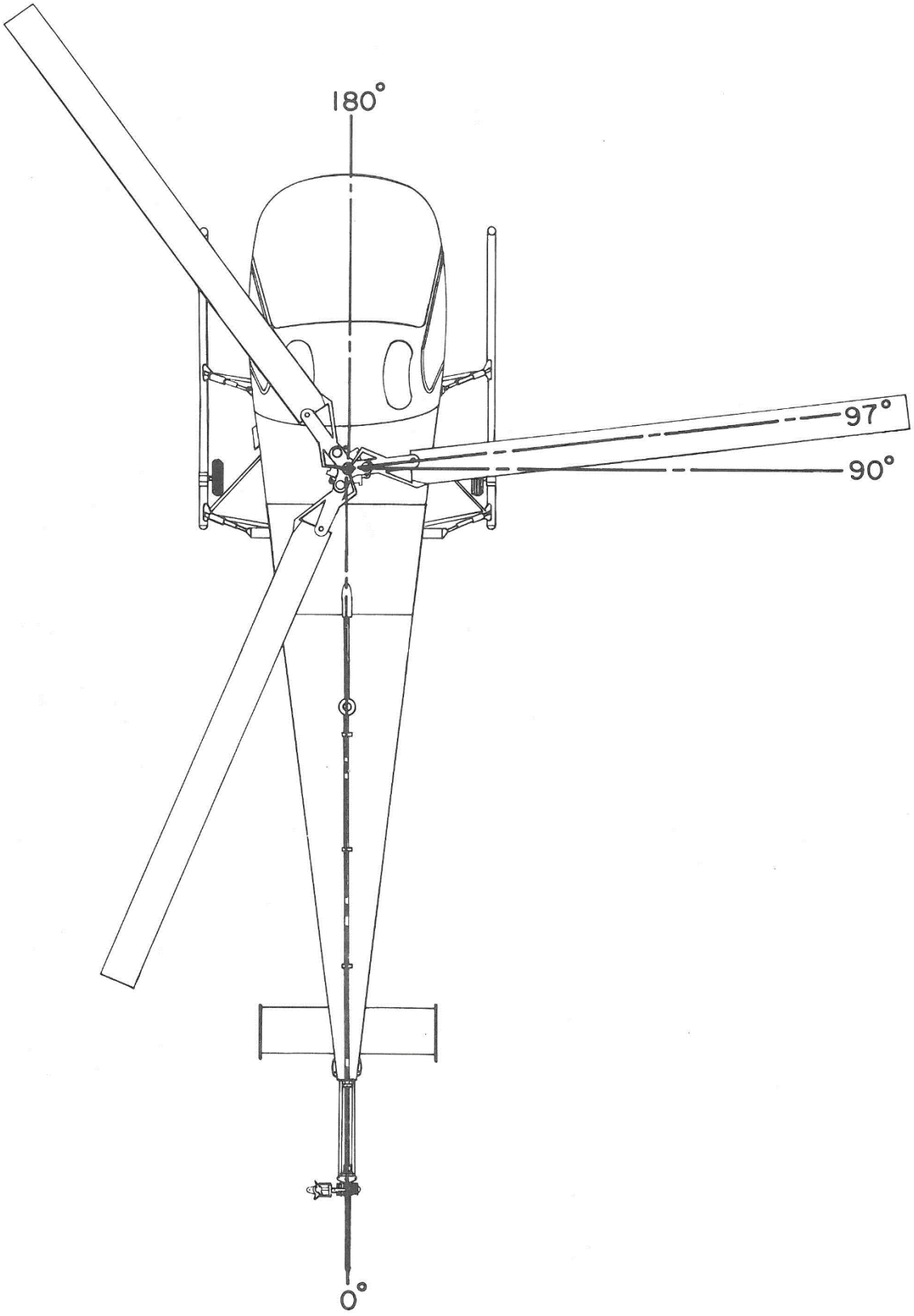

Figure 12-17. Main Rotor Azimuth Positions

UNCONTROLLED COPY WHEN DOWNLOADED OR PRINTED

Visit www.enstromhelicopter.com for instructions to order an original manual and to register for email notification of updates.

F. Inspection – Cyclic Control, Upper Bellcrank Mounts

NOTE: Use the following procedure to inspect the upper bellcrank mounts for condition and security before accomplishing the Cyclic Rigging procedure (Para. 12-7, B-E) and during periodic inspections (100 Hour/Annual, Para. 4-51, Item 14).

NOTE: Denatured alcohol, mineral spirits, or equivalent solvent may be used to remove grease or oil residue from the cabin mount.

NOTE: If equipped with control tube covers, the covers may be left in place for visual inspection of the forward side of the upper cabin mount.

(1) Inspect cabin bellcrank mounts (lateral and longitudinal) for cracks as follows:

(a) Remove seat structure cover, if not already removed,

(b) If not equipped with control tube covers, remove the upper engine cowl, if not already removed.

(c) Remove grease or oil residue from the cabin mount.

(d) With the aid of a bright light source and inspection mirror, inspect the cabin mounts for cracks (Figure 12-17.1).

(2) Inspect all visible rivets for condition and looseness (Figure 12-17.1).

(3) Inspect cabin bellcrank mount installation hardware for looseness by moving the bellcrank side to side in the same axis as the installed hardware.

NOTE: Looseness (side-to-side movement) in the bellcrank installation is attributed to worn bearings, loose hardware, or improper stack-up, whereas binding is attributed to interference caused by constriction in the joint. This occurs when the torque load is carried through the bearings and the cabin mount rather than through the internal spacer (5) (Figure 12-17.2).

NOTE: F-28F, S/N S/N 833 and subsequent, and 280FX, S/N 2152 and subsequent may include shims (P/N 28-16209-X, P/N 28-16217-X) in the hardware stack-up. Refer to Figure 12-17.2.

(a) Refer to Para. 11-7, G for proper hardware stack-up and adjust, as required.

(b) If looseness is detected (deflection, audible clicking, slackness, etc.), the bearings (2) and spacers (4 and 5) must be replaced.

NOTE: Retain hardware stack-up in the order removed for re-installation.

1 Remove control tubes.

2 Remove nut (8), bolt (6), and washers (7).

3 Capture spacers (4), shims (11), and washers (3) and remove bellcrank (1).

4 Remove spacer (5) and press out bearings (2) from bellcrank (1).

5 Install new bearings (2) and ream in accordance with Figure 12-17.2.(b).

UNCONTROLLED COPY WHEN DOWNLOADED OR PRINTED

Visit www.enstromhelicopter.com for instructions to order an original manual and to register for email notification of updates.

6 Install bellcrank with new spacers and shims, as required, and complete the installation (torque 50-70 in-lb/5.6-7.9 Nm) (Figure 12-17.2).

(4) Inspect the bellcrank for binding.

CAUTION: MAINTAINING THE REQUIRED TORQUE IS CRITICAL TO THE SECURITY OF THE BELLCRANK INSTALLATION AND PROPER PERFORMANCE OF THE CYCLIC CONTROL SYSTEM. INTENTIONALLY UNDER-TORQUING THE BELLCRANK ATTACHMENT HARDWARE TO ACHIEVE FREEDOM OF MOVEMENT MAY ULTIMATELY CAUSE A LOSS OF FLIGHT CONTROL.

(a) If binding is present, the length of spacer (5) must be verified, and the hat-end of the bearings (2) filed to increase the protrusion of the spacer.

1 Remove control tubes.

NOTE: Retain hardware stack-up in the order removed for re-installation.

2 Remove nut (8), spacers (4 and 5), shims (11), if present, bolt (6), and washers (7).

3 Capture spacers (4), shims (11), and washers (3) and remove bellcrank (1).

4 Remove spacer (5) from bellcrank (1).

5 Verify length of spacer (5) (0.817”/0.819”).

6 File the hat-end of bearing to reduce thickness. Deburr and remove any debris from the assembly.

(b) Complete the installation (torque 50-70 in-lb/5.6-7.9 Nm).

(c) Repeat step 4, as necessary, to obtain a freely moving bellcrank at the required torque.

(d) Safety nuts when check is completed.

(e) Reinstall control tube covers, if installed.

1 Reinstall the four cover fasteners.

2 Reposition the boot and secure with cable ties.

3 Seal the cover edge with RTV sealant (Dow Corning 732, or equivalent).

(f) Reinstall the fuel tanks.

(g) Reinstall the seat structure cover.

UNCONTROLLED COPY WHEN DOWNLOADED OR PRINTED

Visit www.enstromhelicopter.com for instructions to order an original manual and to register for email notification of updates.

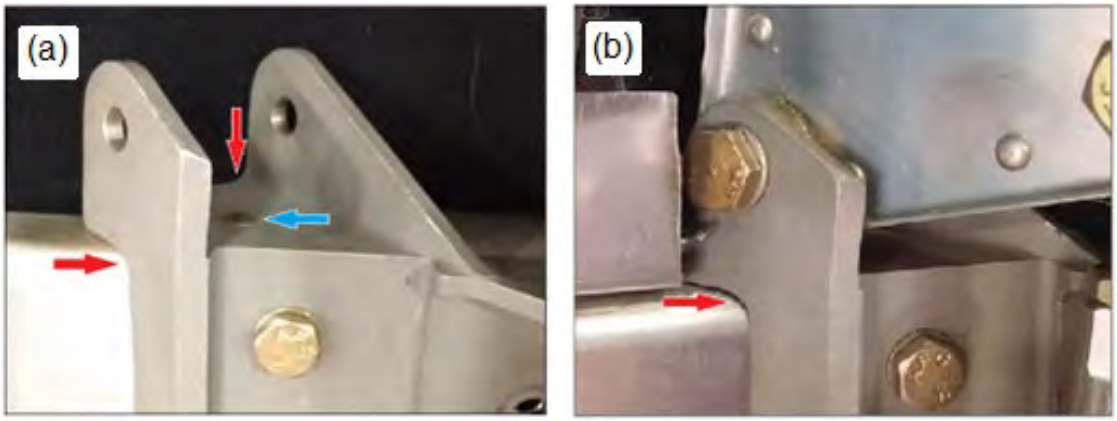

Figure 12-17.1. Upper Cabin Mount Inspection (LH Shown) (Incomplete installation shown in (a);

Red arrow indicates area for a possible crack, (a) and (b);
Blue arrow indicates area of rivet inspection, (a).

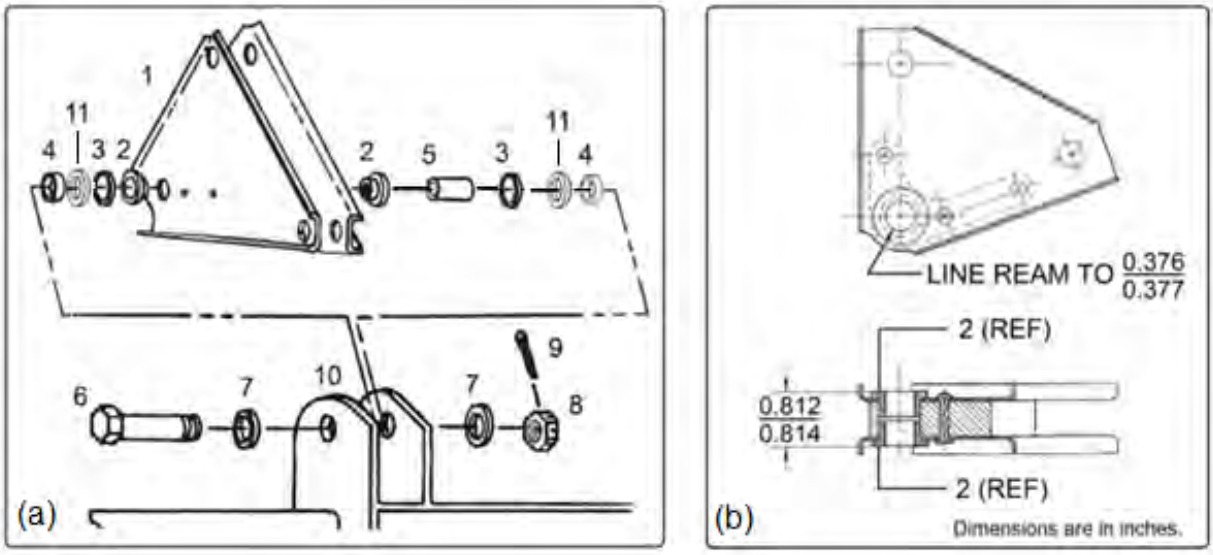

1. Bellcrank
2. Bearing
3. Washer (P/N ECD050-11)
4. Spacer: (0.095” or 0.105”, as required)
5. Spacer
6. Bolt
7. Washer
8. Nut
9. Cotter Pin
10. Cabin Mount (LH shown)
11. Shim: (0.0005”, 0.001”, 0.0015”, 0.002”, 0.003”, 0.005”, or 0.010”, as required)

Figure 12-17.2. Upper Cabin Mount Hardware (a) and Bellcrank Bearing Finish (b)

UNCONTROLLED COPY WHEN DOWNLOADED OR PRINTED

Visit www.enstromhelicopter.com for instructions to order an original manual and to register for email notification of updates.

G. Hardware Stack-up – Cabin mount

NOTE: See Figure 12-17.2 (a).

(1) Measure the distance between the 0.250 inch diameter holes of P/N 28-11307-1 mount. This is Measurement A.

(2) Measure the length of spacer (Item 5). This is Measurement B.

(3) Measure the thickness of washer (Item 3, inboard). This is Measurement C.

(4) Measure the thickness of washer (Item 3, outboard). This is Measurement D.

(5) Solve for Δ using this formula: A – (B + C +D) = Δ

(6) Determine spacer (Item 4) selection from this formula: Δ/2 = E

(a) Select spacer P/N 28-16209-1 if E value is ≥ 0.101 inch.

(b) Select spacer P/N 28-16209-11 if E value is ≤ 0.100 inch.

(7) Measure the thickness of spacer (Item 4, inboard). This is Measurement F.

(8) Measure the thickness of spacer (Item 4, outboard). This is Measurement G.

(9) Determine the shim thickness required for the inboard side. This will be Measurement H.

(a) Solve for H using this formula: E – F = H

(b) Select P/N 28-16217-x as required to equal H.

(10) Determine the shim thickness required for the outboard side. This will be Measurement I.

(a) Solve for I using this formula: E – G = I

(b) Select P/N 28-16217-x as required to equal I.

(11) Verify that (B + C + D +F +G + H + I) = A (+0/-0.001)

(12) Install P/N 28-16217-x (Item 16) shims, as required, between Item 3 and Item 4, inboard and outboard, respectively.

UNCONTROLLED COPY WHEN DOWNLOADED OR PRINTED

Visit www.enstromhelicopter.com for instructions to order an original manual and to register for email notification of updates.

12-8 CYCLIC AZIMUTH CHECK

A. Verification of Rigging

(1) Rotate #1 blade to the 97° azimuth position (Figure 12-17).

NOTE: The 90° position is to the right side of the helicopter. The 97° position may be checked by observing that the dogleg rod end bearing controlling the #1 blade is directly over and in line with rod (14) of Figure 12-12.

(2) Lower the collective stick to full down position and tighten friction. Recheck 6.5 degrees ± .5 degree measurement of the main rotor blade grip.

(3) Move the cyclic stick to full aft position. Measure blade grip angle. Measurement to be 14.5 degrees ± .5 degree.

(4) Remove tool T-1775 from cyclic stick.

NOTE: If adjustments are required, adjust the left hand rod end HMLVV5M on rod (14) (Figure 12-12).

(5) Move the cyclic stick to full forward position. Measure the blade grip angle. Measurement to be -2.5 degrees ± .5 degree.

NOTE: Total travel must be 17 degrees ± .5 degree.

NOTE: Because push-pull rod adjustments in the cyclic rigging affect all three main rotor blades equally, it is only necessary to do an azimuth angel check on one blade.

(6) Rotate the main rotor hub until the dog leg rod end bearing controlling the #1 blade is directly over and in line with rod 13) of Figure 12-12, Cyclic Rigging.

(7) Move the cyclic stick to full right position. Measure the blade grip angle. Measurement to be 14.5 degrees ± .5 degree.

NOTE: If adjustments are required, adjust rod (13).

(8) Move the cyclic stick to full left position. Measure blade grip angle. Measurement to be -2.5 degrees ± .5 degree. Total travel must be 17 degrees ± .5 degree.

(9) Rotate the cyclic stick 360° around the stop ring to check for evidence of binding.

CAUTION: UPON COMPLETION OF ANY ADJUSTMENTS TO CONTROL SYSTEM CHECK TO SEE IF AUTOROTATIVE RPM IS IN A SAFE RANGE DURING FIRST GROUND RUN-UP.

Range: 16 to 20 inches manifold pressure at 3050 RPM

NOTE: A high manifold pressure indicates a low autorotation RPM. A low manifold pressure indicates a high autorotation RPM. See Item B for autorotative RPM adjustment.

B. Autorotative RPM Adjustment

NOTE: Content moved to Para. 12-13, E, (8).

UNCONTROLLED COPY WHEN DOWNLOADED OR PRINTED

Visit www.enstromhelicopter.com for instructions to order an original manual and to register for email notification of updates.

12-9 CYCLIC TRIM SPRINGS RIGGING PROCEDURE

NOTE: The lateral bias spring installation is configured one of two ways. Helicopters certified to 2350 lb gross weight are configured as shown in Figure 12-18(a); Helicopters certified to 2600 lb gross weight (configured to Enstrom Specification Drawing 28-100015) are configured as shown in Figure 12-18(b).

NOTE: If the helicopter funs out of forward or right trim when the lateral bias spring is adjusted for left cyclic forces, the bias spring installation configured to Enstrom Specification Drawing 28-100015 should be installed.

A. Lateral Bias Spring Installation (Figure 12-18)

NOTE: The lateral bias spring is located on the left side of the seat structure.

(1) Attach spring (1) to bracket (2) and to the third hole from forward end of bracket (3).

(2) Flight check the helicopter to see if the desired lateral trim forces can be obtained.

B. Lateral Adjustment (Figure 12-18)

(1) Maximum left lateral trim is obtained by moving the spring outboard on bracket (3).

(2) Maximum right lateral trim is obtained by moving the spring inboard on bracket (3).

C. Longitudinal Bias Spring Installation (Figure 12-19)

NOTE: The longitudinal bias spring is located on the right side of the seat structure.

(1) Attach spring (1) to bracket (2) and to the fourth hole from top of bracket (3).

(2) Flight check the helicopter to see if the desired longitudinal trim forces can be obtained.

D. Longitudinal Adjustment (Figure 12-19)

(1) Moving spring down on bracket (3) will provide maximum forward trim force.

(2) Moving spring upward on bracket (3) will provide maximum aft trim force.

NOTE: Should locating the spring in the top hole of bracket (3) provide insufficient aft spring force, the bracket may be moved aft to the second notch and the choice of hole location repeated.

UNCONTROLLED COPY WHEN DOWNLOADED OR PRINTED

Visit www.enstromhelicopter.com for instructions to order an original manual and to register for email notification of updates.

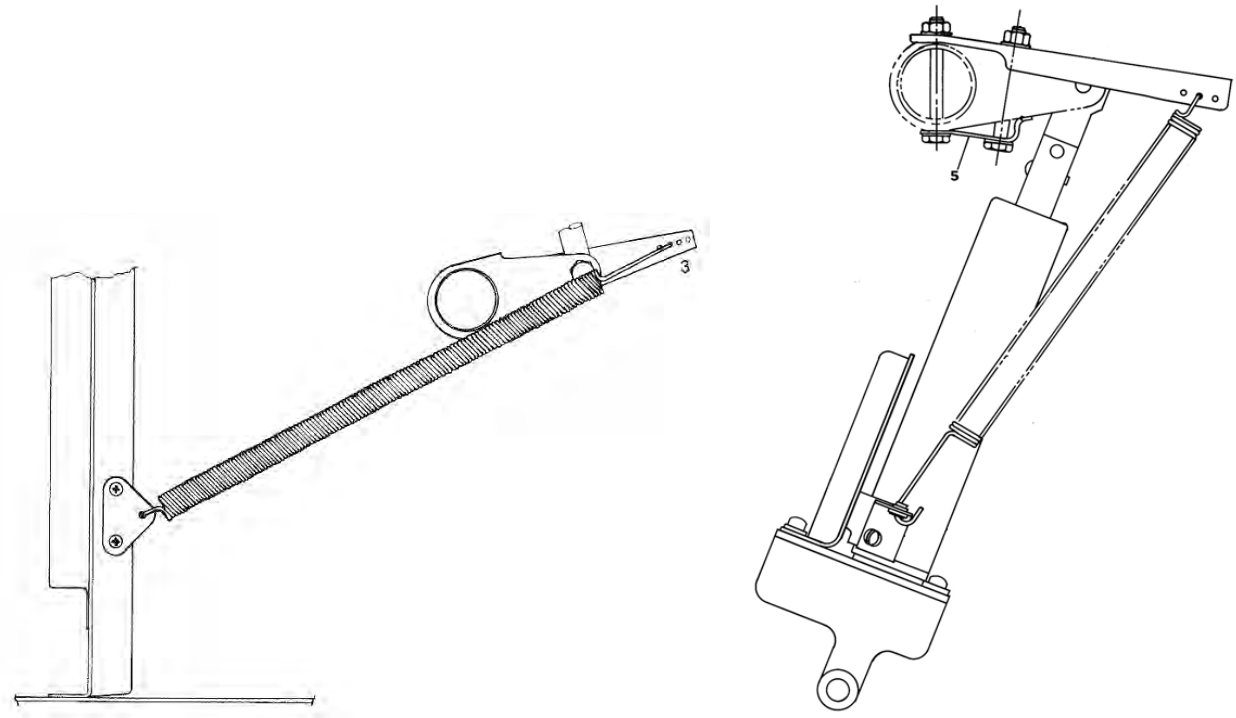

(a) (b)

Figure 12-18. Lateral Bias Spring Installation

(a) Applicable to 2350 lb gross weight helicopters

(b) Applicable to 2600 lb gross weight helicopters configured to Enstrom Specification 28-100015

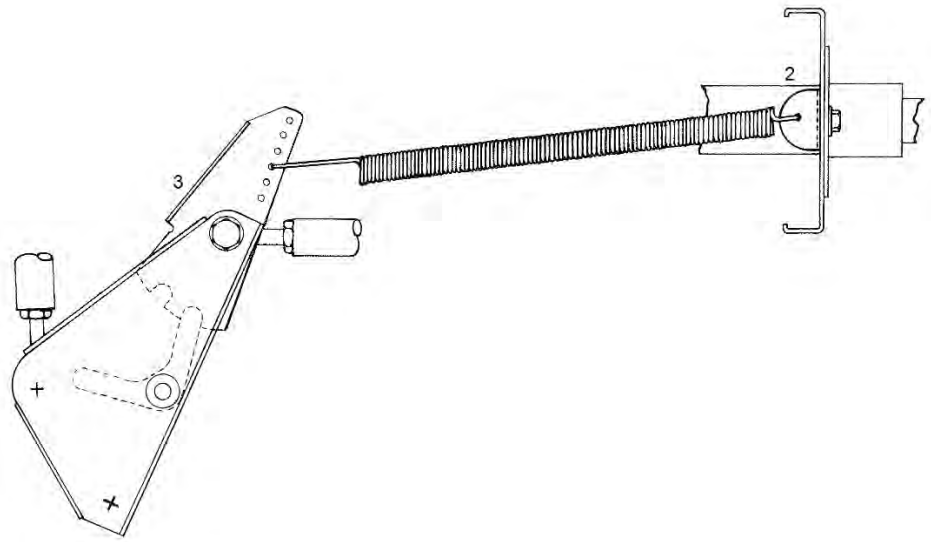

Figure 12-19. Longitudinal Bias Spring Installation

UNCONTROLLED COPY WHEN DOWNLOADED OR PRINTED

Visit www.enstromhelicopter.com for instructions to order an original manual and to register for email notification of updates.

12-10 LOWER SWASHPLATE ASSEMBLY

A. Removal – Lower Swashplate Assembly (Figure 12-20)

(1) Remove both side panel cowls.

(2) Drain fuel tanks.

(3) Disconnect fuel lines and remove the left side fuel tank (Para. 13-10).

(4) Disconnect the longitudinal cyclic rod (2) from lower bearing housing (1) by removing bolt (3), washers (4) and (5), spacer (6) and nut (7).

(5) Disconnect the lateral cyclic rod (11) from bearing housing (1) by removing bolt (8), washers (9), and nut (10).

(6) Disconnect rod ends (15) in three places from the lower swashplate housing (17) by removing bolts (16), spacers (14), washers (13) and nuts (12).

(7) Cut safety wire and remove bolts (screws on older helicopters) (18) and washers (19) in six places.

(8) Pull downward on lower bearing housing (1) to remove lower swashplate assembly.

B. Disassembly – Lower Swashplate Assembly (Figure 12-21)

(1) Install tool T-0016 in the end of the tie rod (19). Place a wrench on the tool T-0016 to prevent the tie rod from rotating and remove the cotter pin (10), nut (11), light washer (21), washer (12), DU washer (13), and shims (14) from the tie rod.

(2) Tap the tie rod out of the bushings (15) using an aluminum drift. Separate the lower universal housing (7) from the upper universal housing (18). Remove the spacers (20) from inside the bushings (15) in the housing.

(3) Remove the shims (14) and the DU washer (13) from the tie rod (19).

(4) Temporarily install the tie rod (19) in the universal shaft (17) to prevent it from rotating and remove the cotter pins (10), nuts (11), washers (12), DU washers (13), and shims (14) from both ends of the shaft (17).

(5) Tap the end of the shaft with an aluminum drift to remove the shaft and sleeve (16) from the lower universal housing (7).

(6) Tap the opposite sleeve to remove it from the lower universal housing.

(7) Tap the sleeves from the upper universal housing (18) using an aluminum drift.

(8) Hold the bolt (1) with a wrench and remove the cotter pin (10), nut (9), and washer (8).

CAUTION: A VARIATION OF THE LOWER UNIVERSAL HOUSING HAS A SET SCREW PLUG THAT MUST BE LOOSENED TO ALLOW REMOVAL OF THE BOLT (1).

(9) If applicable, back out the set screw (22) in the lower universal housing (7).

UNCONTROLLED COPY WHEN DOWNLOADED OR PRINTED

Visit www.enstromhelicopter.com for instructions to order an original manual and to register for email notification of updates.

(10) Pull the bolt (1) and bearing assembly (3) and (4) from the lower universal housing (7).

(11) Press the bolt (1) from the bearing (3) and remove slinger (6) and spacer (5).

(12) Remove the retaining ring (2) and grease fitting from the housing (4).

WARNING: USE EXTREME CAUTION WHEN REMOVING OR INSTALLING HEATED PARTS AND ASSEMBLIES TO PREVENT FROM INJURING PERSONNEL.

WARNING: USE PROTECTIVE GLOVES WHEN HANDLING HEATED PARTS.

(13) Heat the housing (4) to approximately 250°F/121°C and remove the bearing (3) from the housing.

(14) Press the DU bushings (15) from the sleeves (16).

C. Lower Swashplate Assembly – Inspection

(1) Use the following procedure to inspect the lower swashplate assembly during periodic inspections (100 Hour/Annual):

(a) Remove both side panel cowls, if not previously removed.

(b) Disconnect the pitch change bellcranks located on the main rotor hub from the main rotor push-pull rods located in the mast and from the pivot brackets.

(c) With the aid of an assistant, remove the collective friction and move the collective up and down throughout the range and wiggle the cyclic stick (movement of the collective and cyclic stick does not have to occur simultaneously). Observe and ***carefully*** feel the lower swashplate assembly for any looseness (e.g. vertical play at the universal joint or end play along the universal shaft and tie rod axes). Any looseness is most noticeable with a collective control reversal and/or reversal of the cyclic controls.

NOTE: Vertical looseness may also be evident at the collective stick as a sudden change in stick force or may exhibit itself as a clinking sound. Using a 9/16 inch crows foot and torque wrench set to 60 in-lb/6.8 Nm, check that the torque required to rotate the tie rod assembly at the nut on the end of the tie rod assembly is more than 60 in-lb/6.8 Nm. Do not remove the cotter pin from the nut during the check and stop the torque check if 60 in-lb/6.8 Nm is reached without the tie rod assembly rotating. Any rotation of the tie rod with less than 60 in-lb/6.8 Nm of torque is unacceptable.

NOTE: Refer also to Para. 12-1, Troubleshooting.

(d) If neither looseness nor loss of torque is evident, reconnect the pitch change bellcranks and return the aircraft to service.

(e) If any looseness or loss of torque is found, remove the lower swashplate assembly from the aircraft and perform the following additional inspections:

UNCONTROLLED COPY WHEN DOWNLOADED OR PRINTED

Visit www.enstromhelicopter.com for instructions to order an original manual and to register for email notification of updates.

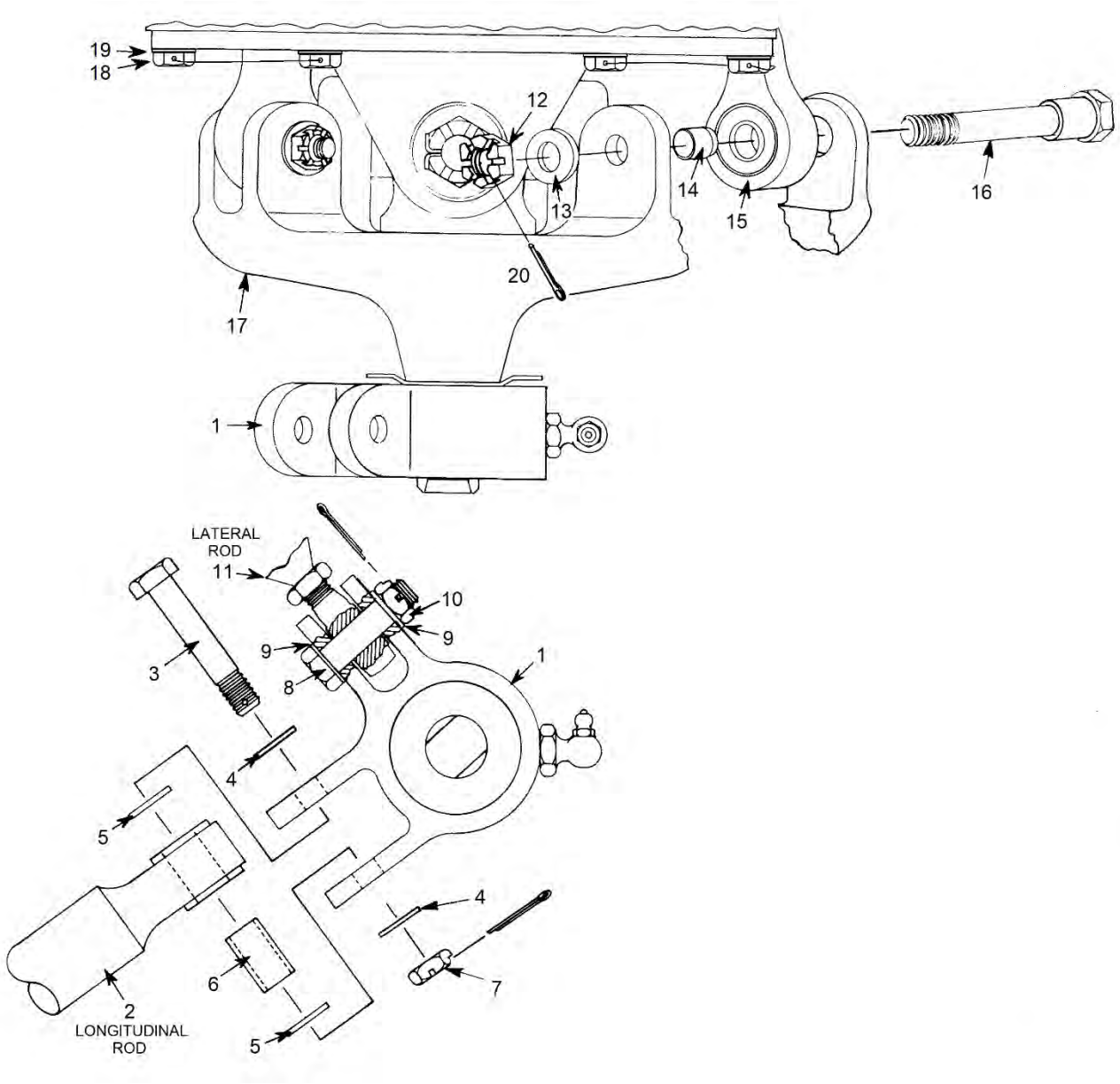

1.	Lower Bearing Housing	11.	Lateral Push-Pull Rod
2.	Longitudinal Push-Pull Rod	12.	Nut (P/N AN320-4)
3.	Bolt	13.	Washer (P/N AN960-416L)
4.	Washer	14.	Spacer (P/N 28-16124-1)
5.	Washer (P/N ECD050-11)	15.	Rod End (Dog Leg)
6.	Spacer	16.	Bolt (P/N 28-16129-2)
7.	Nut	17.	Lower Swashplate Housing
8.	Bolt	18.	Bolt
9.	Washer	19.	Washer
10.	Nut	20.	Cotter Pin (P/N AN381-2-8)

Figure 12-20. Lower Swashplate Installation

UNCONTROLLED COPY WHEN DOWNLOADED OR PRINTED

Visit www.enstromhelicopter.com for instructions to order an original manual and to register for email notification of updates.

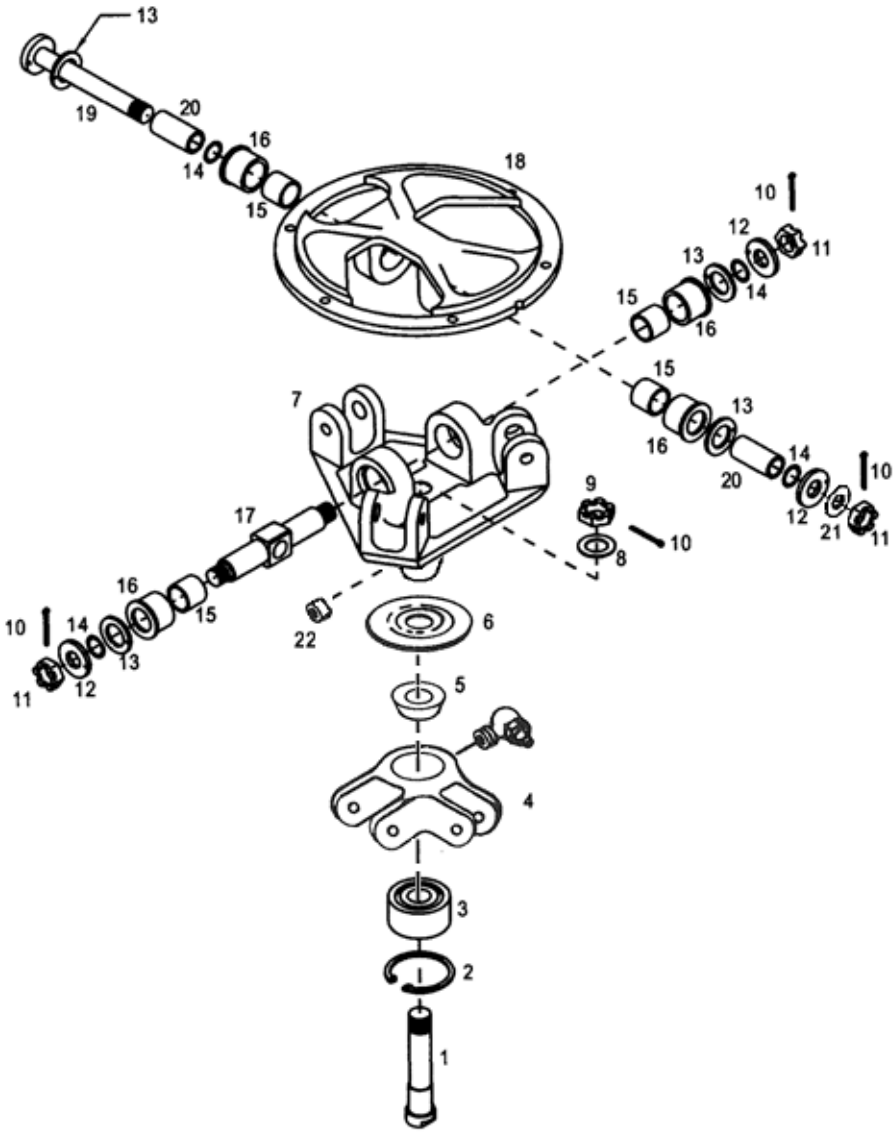

1.	Bolt (Shaft)	12.	Washer
2.	Retaining Ring	13.	DU Washer
3.	Bearing	14.	Shim
4.	Bearing Housing	15.	DU Bearing
5.	Spacer	16.	Sleeve
6.	Slinger	17.	Universal Shaft
7.	Lower (Universal) Housing	18.	Upper Housing
8.	Washer	19.	Tie Rod Assembly
9.	Nut	20.	Spacer
10.	Cotter Pin	21.	Light Washer
11.	Nut	22.	Set Screw (if equipped)

Figure 12-21. Lower Swashplate Assembly

UNCONTROLLED COPY WHEN DOWNLOADED OR PRINTED

Visit www.enstromhelicopter.com for instructions to order an original manual and to register for email notification of updates.

1 Inspect the universal joint for looseness/play by twisting and pushing and pulling the upper and lower housings of the lower swashplate against each other.

2 Inspect the tie rod and universal shaft axis for end play by attempting to move the upper and lower housings against each other along the tie rod and universal shaft axes.

3 Check the pre-load of the tie rod and universal shaft axis. The pre-load should be between 0.5 and 2.0 pounds (.23 and .91 kg) using a spring scale, with no noticeable end play.

(f) Disassemble the lower swashplate assembly and inspect the detail parts in accordance with Table 12-1.

(g) Replace unserviceable parts as required and reassemble the lower swashplate in accordance with Para. 12-10, D.

(h) Reinstall the lower swashplate assembly and reconnect the pitch change bellcranks.

(2) See Table 12-1 for the detailed inspection requirements for the lower swashplate assembly.

D. Lower Swashplate – Assembly (Figure 12-21)

(1) Remove the seal from one side of the bearing (3).

WARNING: USE EXTREME CAUTION WHEN REMOVING OR INSTALLING HEATED PARTS AND ASSEMBLIES TO PREVENT FROM INJURING PERSONNEL.

WARNING: USE PROTECTIVE GLOVES WHEN HANDLING HEATED PARTS.

(2) Heat the bearing housing (4) to approximately 250°F/121°C.

(3) Apply a small amount of Loctite 277 to the O.D. of the bearing (3) and install the bearing (3) with the open side toward the “closed end” of the bearing housing (4). Allow the housing assembly to cool.

NOTE: Install the housing assembly onto the lower swashplate assembly with the retaining ring away from the swashplate.

(4) Install the retaining ring (2) and grease fitting in the housing (4).

NOTE: Install the bolt with the head on the same side as the retaining ring.

(5) Support the inner race of the bearing (3) and press the bolt (1) into the bearing.

(6) Install the spacer (5) with the narrow side of the spacer against the inner race of the bearing.

(7) Install the slinger (6) on the bolt (1).

UNCONTROLLED COPY WHEN DOWNLOADED OR PRINTED

Visit www.enstromhelicopter.com for instructions to order an original manual and to register for email notification of updates.

(8) Lubricate (MIL-PRF-81322) the bolt (1) and install into the lower universal housing (7). Install the washer (8) and nut (9). Torque the nut and install a cotter pin. Apply VC3 Vibra-Tite over the end of the bolt, nut, and cotter pin.

NOTE: A variation of the lower universal housing (7) has a set screw plug (22) that must be installed upon reassembly.

(9) If applicable, apply a small amount of Loctite 277 to set screw (22) and install set screw into the lower universal housing (7).

(10) Install the DU bushings (15) into the sleeves (16) (4 places).

NOTE: Lubricate (Tri-Flow brand or equivalent light viscosity lubricant) DU washers and bushings.

(11) Check the fit of the universal shaft (17) and the tie rod (19) in the bushings. The universal shaft and tie rod should move freely in the bushings. If required, use an expandable reamer and lightly ream the bushings so that the shaft and tie rod move freely in the bushings. Do not ream the bushings so they have free play (loose fit).

NOTE: The lower universal housing should be heated with a heat gun to allow easier installation of the sleeves. Do not exceed 250°F/121°C. Allow the parts to cool before shimming.

WARNING: USE EXTREME CAUTION WHEN REMOVING OR INSTALLING HEATED PARTS AND ASSEMBLIES TO PREVENT FROM INJURING PERSONNEL.

WARNING: USE PROTECTIVE GLOVES WHEN HANDLING HEATED PARTS.

(12) Lubricate (MIL-PRF-81322) the O.D. of two of the sleeves (16) and the bores of the ears on the lower universal housing (7).

(13) Install one of the sleeves (16) into the lower universal housing using tool T-0100-1.

CAUTION: ENSURE THAT THE CORRECT UNIVERSAL SHAFT, P/N 28-16223-19, IS USED WHEN ASSEMBLING THE LOWER SWASHPLATE ASSEMBLY. (THE LENGTH OF THE BUSHING SURFACE IS 1.289 IN ± .001 IN/32.74 MM ± .03 MM). FAILURE TO INSTALL THE CORRECT UNIVERSAL SHAFT CAN RESULT IN PREMATURE WEAR OF THE TIE ROD AND UNIVERSAL SHAFT.

(14) Install the universal shaft (17) into the lower universal housing (7) though the ear without the sleeve and then install a sleeve (16) into the lower universal housing using T-0100-1. The shaft should rotate freely in the bushings.

(15) Shim the universal shaft using the following procedure:

NOTE: Lubricate (Tri-Flow brand or equivalent light viscosity lubricant) DU washers and bushings.

(a) Using a felt tip marker, place a mark on one of the ears on the lower universal housing and install a .020 in/.5 mm shim (14) on the end of the universal shaft (17). The mark indicates a .020 in/.5 mm shim is installed.

(b) Install a DU washer (13) on the shaft (17) with the Teflon (grey) side of the washer against the sleeve (16).

UNCONTROLLED COPY WHEN DOWNLOADED OR PRINTED

Visit www.enstromhelicopter.com for instructions to order an original manual and to register for email notification of updates.

(c) Install a washer (12) on the shaft (17) with the pin towards the DU washer (13).

(d) Install the tie rod (19) into the universal shaft (17) to prevent the shaft from rotating and install a nut (11). Ensure the DU washer is properly seated on the retention pin on the washer (12). Torque the nut to 110-150 in-lb/12.5-17.0 Nm and check that the cotter pin hole is aligned. This may require installing different nuts until the proper torque and cotter pin hole alignment is achieved. Do not back the nut off for cotter pin alignment.

(e) Install a .020 in/.5 mm shim (14), DU washer (13), washer (12), and nut (11) on the opposite end of the universal shaft. Ensure the DU washer (13) is properly seated on the retention pin on the washer (12). Torque the nut to 110-150 in-lb/12.5-17.0 Nm and check that the cotter pin hole is aligned. This may require installing different nuts until the proper torque and cotter pin hole alignment is achieved.

(f) Tap each end of the universal shaft (17) with an aluminum drift and hammer to seat the stack up.

(g) Insert the tie rod or an appropriate size bolt in the tie rod bore of the universal shaft and check the preload with a spring scale at a 3 in/7.5 cm arm. The preload should be 1.5-2.0 lb/.68-.91kg. If too loose, fewer shims are required. If too tight, more shims are required. Ideal shimming of the assembly is to have equal amounts of shims on each end of the universal shaft; however, a .005 in/.13 mm maximum difference in shims is allowed from end to end to obtain proper preload.

NOTE: The upper universal housing should be heated with a heat gun to allow easier installation of the sleeves. Do not exceed 250°F/121°C. Allow the parts to cool before shimming.

WARNING: USE EXTREME CAUTION WHEN REMOVING OR INSTALLING HEATED PARTS AND ASSEMBLIES TO PREVENT FROM INJURING PERSONNEL.

WARNING: USE PROTECTIVE GLOVES WHEN HANDLING HEATED PARTS.

(15) Lubricate (MIL-PRF-81322) the O.D. of the two remaining sleeves (16) and the bores of the ears on the upper universal housing (18). Using tool T-0100-1, install the sleeves into the upper universal housing.

CAUTION: ENSURE THAT THE SPACERS USED ON THE TIE ROD ARE THE CORRECT LENGTH (REFER TO TABLE 12-1). FAILURE TO INSTALL THE CORRECT LENGTH SPACERS CAN RESULT IN PREMATURE WEAR OF THE TIE ROD AND UNIVERSAL SHAFT.

(16) Install a DU washer (13) onto the tie rod (19). Ensure the Teflon (grey) surface is facing inboard and the DU washer is properly seated on the retention pin. Install a spacer (20) and then a .020"/.5 mm shim (14) onto the tie rod (19).

NOTE: Lubricate (Tri-Flow brand or equivalent light viscosity lubricant) DU washers and bushings.

(17) Place the upper universal housing over the lower universal housing and align the proper openings.

(18) Insert the tie rod (19) through the sleeve in the upper housing that is in line with the dog leg ears of the lower housing, the universal shaft, and the opposite sleeve in the upper housing.

UNCONTROLLED COPY WHEN DOWNLOADED OR PRINTED

Visit www.enstromhelicopter.com for instructions to order an original manual and to register for email notification of updates.

CAUTION: ENSURE THAT THE SPACERS (20) USED ON THE TIE ROD ARE THE CORRECT LENGTH (REFER TO TABLE 12-1). FAILURE TO INSTALL THE CORRECT LENGTH SPACERS CAN RESULT IN PREMATURE WEAR OF THE TIE ROD AND UNIVERSAL SHAFT.

(19) Install the remaining spacer (20) onto the tie rod.

(20) Install a .020 in/.5 mm shim, DU washer (13), washer (12), light washer (21), and nut (11) on the tie rod (19). Ensure the DU washer is properly seated on the retention pin on the washer. Using tool T-0016 to secure the tie rod, torque the nut to 110-150 in-lb/12.5-17.0 Nm and check that the cotter pin hole is aligned. This may require installing different nuts until the proper torque and cotter pin hole alignment is achieved.

(21) Tap each end of the tie rod (19) with an aluminum drift and hammer to seat the stack up.

(22) Install the lower swashplate assembly on tool, T-0134 (Plate Assembly), a spare bell housing, P/N 28-16112-1, clamped in a vise, or on the upper swashplate assembly.

(23) Insert a bolt though one of the ears on the cyclic bearing housing and check the preload of the tie rod axis. The preload on the tie rod axis should be the same as the universal shaft preload ± .25 lb/.11 kg. If too loose, fewer shims are required. If too tight, more shims are required. Ideal shimming of the assembly is to have equal amounts of shims on each end of the tie rod; however, a .005 in/.13 mm maximum difference in shims is allowed from end to end to obtain proper preload.

(24) Install the cotter pins when the preload is set.

E. Lower Swashplate – Installation (Figure 12-20)

(1) Install the lower swashplate with the attachment ears aligned to the doglegs (15).

(2) Secure in place with washers (19) and bolts (18). Torque (30-35 in-lb/3.4-4.0 Nm) and lockwire (.025) the bolts in pairs.

(3) Secure the doglegs (15) to the lower swashplate housing using bolts (16) and spacers (14).

(a) Clean/Degrease the threads on the three bolts (16) using a suitable cleaner (contact cleaner, brake cleaner, etc. procured from local source).

NOTE: Spacers (14) are installed with chamfer inboard toward bearing in dogleg.

(4) Install washers (13) and nuts (12) on bolts (16). Torque the nuts to 40-60 in-lb/4.5-6.8 Nm and install the cotter pins (20) (3 places). Liberally apply a coating of Vibra-Tite VC-3 onto the nut and cotter pin installations.

NOTE: When torqueing the nut to align the cotter pin hole, the nut must be turned in the direction of tightening; the nut may not be loosened to line up the cotter pin hole. Replace the nut, washer, spacer, and/or bolt as required if the cotter pin hole will not line up at the 40-60 in-lb/4.5-6.8 Nm torque application.

UNCONTROLLED COPY WHEN DOWNLOADED OR PRINTED

Visit www.enstromhelicopter.com for instructions to order an original manual and to register for email notification of updates.

(5) Install spacer (6) in the longitudinal push-pull rod (2).

(6) With washers (5) on each side of spacer (6), insert push-pull rod (2) into the lower bearing housing (1).

(7) Install bolt (3), washers (4) and nut (7) to secure the rod in place. Torque (30-40 in-lb/3.4-4.5 Nm) the nut and install the cotter pin (20).

(8) Connect the lateral push-pull rod (11) to the housing (1) using bolt (8), washers (9) and nut (10). Torque (60-85 in-lb/6.8-9.6 Nm) the nut and install the cotter pin (20).

(9) Rotate the cyclic stick to check for binding in the system. Check all connections for security.

(10) Install the fuel tank and connect fuel lines. Install fuel and check for leaks.

(11) Replace side panel cowls.

(12) Perform a maintenance test flight (Para. 12-13).

UNCONTROLLED COPY WHEN DOWNLOADED OR PRINTED

Visit www.enstromhelicopter.com for instructions to order an original manual and to register for email notification of updates.

Table 12-1. Inspection Requirements – Lower Swashplate Assembly

P/N	Fig. 12-21 Item #	Part Name	Inspection*	Serviceable Limits*	Repair Limits*	Repair or Action
28-16123-1, -11	1	Bolt	Bearing surface Dia. .4723 to .4726	-.0002	Not Repairable	Replace Bolt
			Threads (crossed or missing)	None allowed	Not repairable	Replace Bolt
ECD009-11	3	Bearing	O.D. 1.2593 to 1.2598	No Tolerance Allowed	Not Repairable	Replace Bearing
			I.D. .4721 to .4724	No Tolerance Allowed	Not Repairable	Replace Bearing
			Ratcheting or roughness	None allowed	Not Repairable	Replace Bearing
28-16361-1	4	Bearing Assembly	Bolt holes in pivot ears for elongation	None Allowed	Not Repairable	Replace Housing
			Surface nicks or scratches	None Allowed	≤ .010 deep	Blend and polish out smooth
			Bore size I.D. 1.2598 to 1.2604	None Allowed	Not Repairable	Replace Housing
			Cracks	None Allowed	Not Repairable	Replace Housing

UNCONTROLLED COPY WHEN DOWNLOADED OR PRINTED

Visit www.enstromhelicopter.com for instructions to order an original manual and to register for email notification of updates.

Table 12-1. Inspection Requirements – Lower Swashplate Assembly

P/N	Fig. 12-21 Item #	Part Name	Inspection*	Serviceable Limits*	Repair Limits*	Repair or Action
28-16228-1	5	Spacer	Nicks and gouges	None Allowed	≤ .003 deep	Polish out smooth
28-16387-1	6	Slinger	Check for bends in outer edges	.005	Not Repairable	Replace Slinger
28-16119-3, -5	7	Housing	Bushing bores Dia. .7500 to .7505 (-3) .7495 to .7500 (-5)	+.0005	Not Repairable	Replace Housing
			Center bolt bore Dia. .4370 to .4380 (no galling allowed in this bore)	+.0005	Not Repairable	Replace Housing
			Large bolt bore Dia. in the pivot ears .375 to .376	+.0005	Not Repairable	Replace Housing Replace Housing
			Small bolt bore Dia. in the pivot ears .250 to .251	+.0005	Not Repairable	Replace Housing
			Cracks	None Allowed	Not Repairable	Replace Housing
28-16227-3	12	Washer	Nicks and gouges	None Allowed	Not Repairable	Replace Washer
28-16263-5	13	DU Washer	Thickness .0585 to .0605	-.008	Not Repairable	Replace DU Washer
08DU08	15	DU Bearing	**I.D. .4992 to .5019	+.0025	Not Repairable	Replace DU Bearing
28-16226-5	16	Sleeve	O.D. ..7503 to .7508	-.0003	Not Repairable	Replace Sleeve
			I.D. .5937 to .5941	+.0002	Not Repairable	Replace Sleeve

UNCONTROLLED COPY WHEN DOWNLOADED OR PRINTED

Visit www.enstromhelicopter.com for instructions to order an original manual and to register for email notification of updates.

Table 12-1. Inspection Requirements – Lower Swashplate Assembly

P/N	Fig. 12-21 Item #	Part Name	Inspection*	Serviceable Limits*	Repair Limits*	Repair or Action
28-16223-19	17	Universal Shaft	O.D. .4991 to .4995	-.0003	Not Repairable	Replace Shaft
			Tie Rod Bore .3750 to .3752	+.0005	Not Repairable	Replace Shaft
			Concentricity	.0015 FIM	Not Repairable	Replace Shaft
			Threads (crossed or missing)	None Allowed	Not Repairable	Replace Shaft
28-16116-1, -11	18	Housing	Bushing bores Dia. .7500 to .7505	+.0005	Not Repairable	Replace Housing
			Cracks	None Allowed	Not Repairable	Replace Housing
28-16224-5	19	Tie Rod	O.D. .3746-.3749	-.0003	Not Repairable	Replace Tie Rod
			Concentricity	.002 FIM	Not Repairable	Replace Tie Rod
			Threads (crossed or missing)	None Allowed	Not Repairable	Replace Tie Rod
28-16225-19	20	Spacer	O.D. .4991 to .4995	-.0003	Not Repairable	Replace Spacer
			†Length 1.037 to 1.036	-.001	Not Repairable	Replace Spacer

* All dimensions are in inches.

** Inspect DU Bearing I.D. with the bearing installed in the sleeve, P/N 28-16226-5.

† Measure length at several locations to check for uneven wear.

UNCONTROLLED COPY WHEN DOWNLOADED OR PRINTED

Visit www.enstromhelicopter.com for instructions to order an original manual and to register for email notification of updates.

12-11 UPPER SWASHPLATE ASSEMBLY

A. Removal – Upper Swashplate Assembly (Figure 12-22)

NOTE: Removal of the upper swashplate assembly can be accomplished with the removal of one fuel tank; however, the procedure can be facilitated by removing both fuel tanks.

(1) Remove both fuel tanks.

(2) Remove the screws and fiberglass cover over the collective push-pull rod located above the seat deck in the cabin.

(3) If required, remove screws (19) and washers (18) to remove the magnetic pickup bracket (17) (Figure 12-23).

(4) Remove the lower swashplate assembly (Para. 12-10, A).

(5) Remove bolt (1) connecting the push-pull rod (2) and the walking beam (6).

(6) Remove bolts (5), washers, and nuts from pivot straps (3). Pull the pivot straps (3) off of the studs.

(a) If the pivot strap bushings (4) are worn, press to remove from the pivot strap.

(b) If the pivot strap bushings are replaced, they will require reaming before reassembly.

(7) Cut the safety wire and remove bolts (7) and bushings (8) (if equipped) from the upper bearing housing (9, Figure 12-23). Pull the walking beam (6) outward to remove from the bearing housing.

NOTE: The upper swashplate assembly is assembled with one of two approved bearing housing configurations: P/N 28-16108-2 or P/N 28-16108-11. The outer bearing housing bolt holes for the collective walking beam attachment points are larger in P/N 28-16108-11 than P/N 28-16108-2 (approximately Ø.406 vs. Ø.312). This is to accommodate P/N 28-16109-13 bushings. Also, the gaps to accommodate the collective walking beam are wider, thus requiring longer bolts to provide security of attachment.

(8) Remove the cotter pins from the castle nuts (9) of the lower end of the push-pull rods (11).

NOTE: Index mark each dogleg (10) to its respective push-pull rod (11) before disassembly. Doglegs have tapered bores which are matched to push-pull rods.

(9) Remove the castle nuts (9) from push-pull rods (11).

(10) Install puller tool T-0045 over dogleg (10) with center pivot of tool aligned with push-pull rod (11) and remove doglegs (10).

(11) Disconnect the upper end of push-pull rods (11) at the main rotor hub (Figure 9-1):

NOTE: Index mark the pitch change bellcranks to their respective push-pull rod.

(a) Remove bolt (3), washers, and nut from the pitch change bellcrank (5).

UNCONTROLLED COPY WHEN DOWNLOADED OR PRINTED

Visit www.enstromhelicopter.com for instructions to order an original manual and to register for email notification of updates.

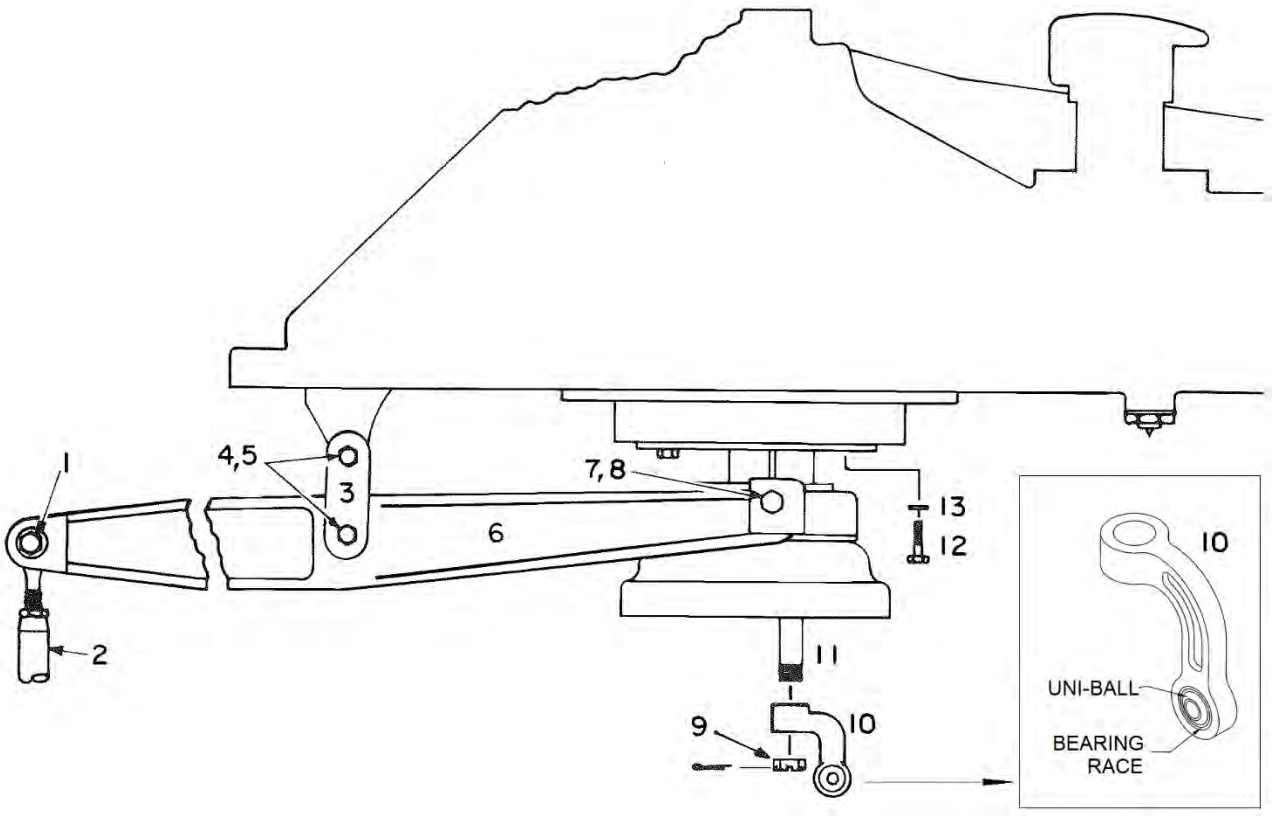

1. Bolt
2. Push-Pull Rod
3. Pivot Strap
4. Pivot Strap Bushing
5. Bolt
6. Walking Beam
7. Bolt
8. Bushing (Used only with 28-16108-11 bearing housing, Figure 12-23, Item 9)
9. Nut
10. Dogleg
11. Push-Pull Rod
12. Bolt
13. Washer

NOTE: See Figure 12-23 if equipped with optional magnetic pickup bracket.

Figure 12-22. Upper Swashplate Installation

UNCONTROLLED COPY WHEN DOWNLOADED OR PRINTED

Visit www.enstromhelicopter.com for instructions to order an original manual and to register for email notification of updates.

(b) Remove bolt (4), washers, and nut from walking beam bracket (3) (Figure 9-2). Lift walking beam out of bracket and separate from the push-pull rod.

NOTE: Secure spacers (7) and (8) in push-pull rod and pitch change bellcrank with a piece of safety wire on disassembly and removal (Figure 9-1).

(12) Remove the push-pull rods (11) through upper end of mast.

(13) Remove bolts (12) and washers (13) connecting the swashplate to the gearbox (3 places).

(14) Slide bell of the upper swashplate up and down to tap the swashplate assembly from the lower end of the mast.

B. Disassembly – Upper Swashplate Assembly (Figure 12-23)

(1) Install blocks (T-1758) on each side of the control housing (14) and clamp blocks in a vise with the nuts (1) facing up for removal.

(2) Bend the locking tab (2) back to a flat position and remove nuts (1) with special socket tool T-0086. Remove the locking tab.

(3) Place the swashplate assembly in an arbor press using blocks T-1758 for support and positioned with bell housing (3) up.

(4) Position plug tools T-0102-1 three places in the threaded end of guide tube assembly (16) and press the swashplate assembly apart.

(5) If DU bearings (13) are worn, press to remove from the control housing (14).

CAUTION: SUPPORT THE CONTROL HOUSING (14) WHEN PRESSING THE DU BEARING (13) FROM THE CONTROL HOUSING.

(6) Press spacer (12) from the bearing housing assembly and remove the rain slinger (11).

(7) Cut the safety wire and remove screws (4), washers (5), bearing retainer (6), and shims (7).

(8) Heat the bearing housing (9) to approximately 250°F/121°C and press bearing (8) from housing.

C. Troubleshooting – Upper Swashplate Assembly

NOTE: If a lower swashplate has been operating in a worn condition, it may have caused the upper swashplate to wear also.

(1) Upon removal of the lower swashplate, check the upper swashplate as follows:

(a) Check the uni-ball in the doglegs for looseness or binding.

NOTE: The uni-ball preload should be equal in all three doglegs.

(b) Check the security of the doglegs to the push-pull rods.

UNCONTROLLED COPY WHEN DOWNLOADED OR PRINTED

Visit www.enstromhelicopter.com for instructions to order an original manual and to register for email notification of updates.

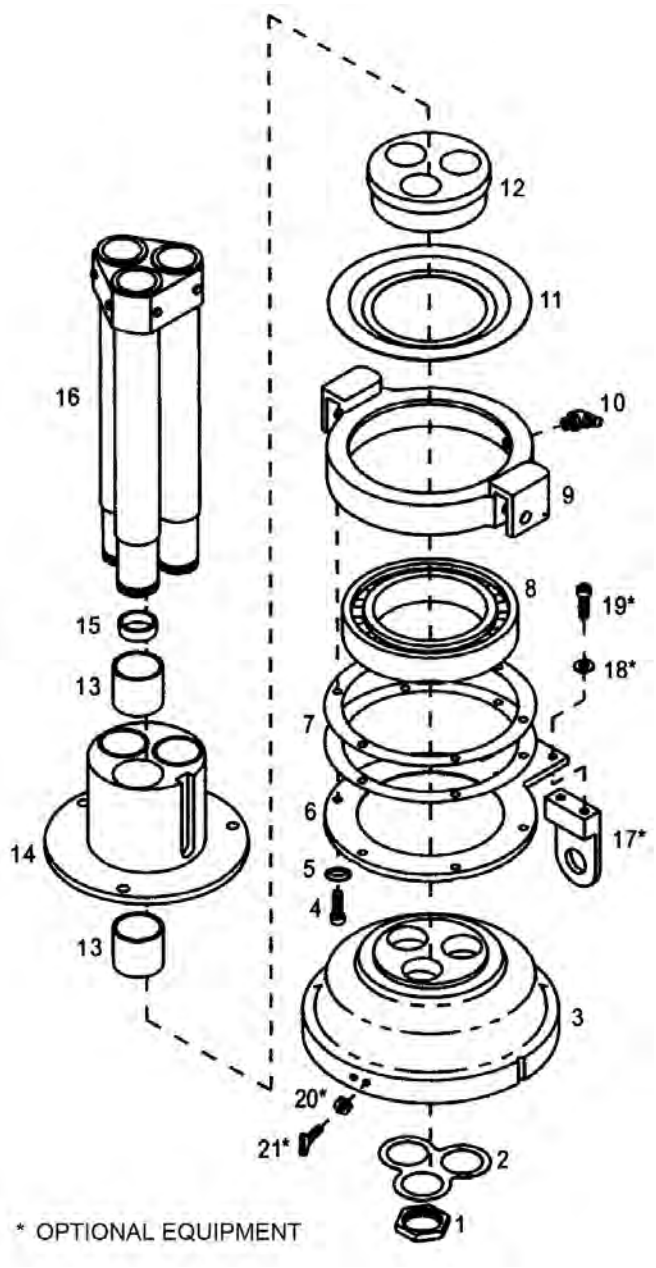

1.	Nut	12.	Spacer
2.	Lock Plate	13.	Bushing
3.	Bell Housing	14.	Control Housing
4.	Bolt	15.	Bushing
5.	Washer	16.	Retainer and Guide Shaft Assembly (Guide Tube Assembly)
6.	Bearing Retainer		
7.	Shims	17.	Magnetic Pickup Bracket
8.	Bearing	18.	Washer
9.	Bearing Housing	19.	Screw
10.	Lube Fitting	20.	Nut
11.	Slinger	21.	Interrupter

Figure 12-23. Upper Swashplate Assembly

UNCONTROLLED COPY WHEN DOWNLOADED OR PRINTED

Visit www.enstromhelicopter.com for instructions to order an original manual and to register for email notification of updates.

(c) Exert fore and aft force on the lower bell housing of the upper swashplate to check for DU bushing wear.

NOTE: The upper swashplate should be removed and rebuilt if the DU bushings have excess of .010 play.

(d) Check the upper collective bearing by disconnecting the yoke and rotating the bearing to check for roughness.

(e) Exert up and down force on the attachment of the walking beam to the transmission mount to check for pivot strap bushing wear.

D. Inspection – Upper Swashplate Assembly

(1) Inspect the swashplate rod end (dog leg) (10, Figure 12-22) assemblies for excessive bearing play/wear.

(a) Using a suitable light source and inspection mirror, as required, visually inspect each of the dog leg assemblies for condition and/or excessive radial play/wear between the bearing uni-ball and the uni-ball bearing race (Figure 12-22). To accomplish this inspection, a second person should slightly rotate, in the pitch axis, the main rotor blade corresponding to the dog leg assembly being inspected.

(b) If the visual inspection of the dog leg assemblies indicates obvious uni-ball play exceeding approximately .025 in/.635 mm, remove the lower swashplate assembly from the aircraft and remove the dog leg assemblies from the aircraft. Inspect and replace the dog leg assemblies with airworthy components as required.

(c) If the lower swashplate assembly has been removed, inspect the corresponding mounting lugs of the lower swashplate assembly for excessive wear/damage (Refer to Figure 12-20). Repair or replace the lower swashplate as applicable.

(d) If the lower swashplate assembly has been removed, inspect bolts (16) and spacers (14) for excessive wear/damage (Figure 12-20). Replace the bolts and/or spacers as required.

(2) See Table 12-2 for detailed inspection requirements of the upper swashplate assembly.

E. Assembly – Upper Swashplate Assembly (Figure 12-23)

(1) If installing a new bearing, remove the seal from one side of the bearing (8).

WARNING: USE EXTREME CAUTION WHEN REMOVING OR INSTALLING HEATED PARTS AND ASSEMBLIES TO PREVENT FROM INJURING PERSONNEL.

WARNING: USE PROTECTIVE GLOVES WHEN HANDLING HEATED PARTS.

(2) Heat bearing housing (9) to approximately 250°F/121°C.

(3) Apply a lubricant (MIL-PRF-81322) to O.D. of bearing (8) and I.D. of housing (9). Install the bearing in housing with the open side of the bearing facing up against the closed side of the housing. Allow the assembly to cool.

UNCONTROLLED COPY WHEN DOWNLOADED OR PRINTED

Visit www.enstromhelicopter.com for instructions to order an original manual and to register for email notification of updates.

(4) Calculate the thickness of shims (7) required to preload the bearing in the housing using the following procedures:

(a) Use a depth micrometer to measure distance from face of bearing to face of housing.

(b) Subtract .003 in/.08 mm from measurement in step (a) to equal the shims required.

NOTE: Shims are available in thicknesses of .002, .003 and .005 inch.

(5) Place the shims (7) on the face of housing (9).

(6) Install the bearing retainer (6) in place and secure with washers (5) and screws (4). Torque (12-15 in-lb/1.4-1.7 Nm) the screws in an alternating sequence and lockwire in pairs with .025 safety wire.

(7) Install tool T-1709 on the inner race on the sealed side of the bearing (8). Place the slinger (11) on the open face of bearing and press the spacer (12) into the inner race of the bearing.

(8) Clean the guide tube bores of the control housing (14) and O.D. of DU bushings (13) with Loctite Primer.

(9) Press the DU bushings (13) into the control housing (16) until they are flush with the face of the control housing. Rotate the assembly and repeat the installation on the opposite end.

(10) Install the control housing (14) on the guide tube assembly (16) with the large flange of the housing facing toward threaded end of the guide tubes.

(11) Place the guide tube assembly in an arbor press with the threaded end of the guide tubes up.

(12) Lubricate (MIL-PRF-81322) the guide tubes (16) and the I.D. of the holes in spacer (12) installed in the bearing housing assembly. Press the bearing housing assembly onto the guide tubes with the slinger (11) facing the control housing (14) on the guide tube assembly (16).

(13) Lubricate (MIL-PRF-81322) holes in bell housing (3) and press the housing onto the guide tubes. Ensure the bell housing is seated into bearing (8).

(14) Slide the control housing (14) up and down on the guide tubes. If the housing is excessively tight or binding, mark the positions of the bell housing (3), spacer (12), and the bearing housing (9) on the guide tubes (16). Press the assembly apart, rotate the above items 120° on the guide tubes and re-assemble the components. Re-check to ensure the control housing (14) slides with no interference.

(15) Clean the threads of guide tubes and the nuts (1) with Loctite Primer.

(16) Install the aluminum blocks (T-1758) on the control housing (14) and clamp in a vise with the bell housing (3) up.

(17) Install the lock plate (2) on guide tubes.

UNCONTROLLED COPY WHEN DOWNLOADED OR PRINTED

Visit www.enstromhelicopter.com for instructions to order an original manual and to register for email notification of updates.

(18) Apply Loctite 277 to the threads of the nuts (1) and install the nuts onto the guide tubes. Torque the nuts to 240 in-lb/27.1 Nm (3 places) using special socket T-0086.

(19) Secure the lock tab (2) by bending up on two flats for each nut.

F. Installation – Upper Swashplate Assembly and Guidetubes (Figure 12-22)

(1) Lubricate (MIL-PRF-81322) the bore of main rotor mast at the lower end.

(2) Align the slot in the control housing (14, Figure 12-23) with the locking pin in lower end of the mast and install the upper swashplate assembly into the mast. Gently tap the swashplate into position by sliding the swashplate assembly up and down on the guide tubes.

(3) Install washers (13) and bolts (12) in three places. Torque (30-40 in-lb/3.4-4.5 Nm) the bolts and lockwire (.025).

NOTE: Rotate the upper swashplate bearing housing with the swashplate in the full up position and ensure the lockwire does not interfere with the collective bearing housing.

(4) Install the walking beam (6) into the ears of the bearing housing (9, Figure 12-23).

(5) Install bolts (7) and bushings (8), if required, through the walking beam into the bearing housing. Torque (30-40 in-lb/3.4-4.5 Nm) and lockwire (MS20995C32).

NOTE: Ensure proper bolt (7) length for bearing housing with bushing (8). Bolt is P/N 28-16109-11 (1.12 inch shank length).

(6) If the pivot strap bushings (4) were replaced, apply a small amount of Loctite 277 on the O.D. of the bushings and press the pivot strap bushings (4) into the pivot straps (3). Ream with a 3/8” reamer.

(7) Install the pivot straps (3) on the gearbox and walking beam studs.

(a) Install the gearbox attachment bolt (5) and hardware. Torque (30-40 in-lb/3.4-4.5 Nm).

(b) Check the pivot strap for binding or freedom of movement. If the binding is detected, remove hardware. File the hat-end of the bushing (4) to reduce the thickness or protrusion. Deburr and remove any debris from the assembly.

(c) Repeat step (b) and check for binding.

(d) If there is no binding, then install the walking beam attachment bolt (5). Torque (30-40 in-lb/3.4-4.5 Nm).

(e) Perform step (b) and repeat as necessary until there is no binding of the pivot strap.

(f) Install cotter pins.

(8) Install the push-pull rod (2) into the walking beam (6) and connect with hardware (1). Torque (60-85 in-lb/6.8-9.6 Nm) and install cotter pin.

UNCONTROLLED COPY WHEN DOWNLOADED OR PRINTED

Visit www.enstromhelicopter.com for instructions to order an original manual and to register for email notification of updates.

(9) Connect the push-pull rods to the pitch change bellcrank (Figure 9-1):

NOTE: Stuff a shop cloth into the upper end of the mast to prevent anything from being dropped into the mast when connecting the push-pull rods to the pitch change bellcranks. Remember to remove the shop cloth when installation is complete.

WARNING: IF ANYTHING IS DROPPED INTO THE MAST IT MUST BE REMOVED PRIOR TO MOVING THE FLIGHT CONTROLS.

(a) Insert stainless steel spacer (7) into the end of the push-pull rods (6) and spacer (8) into the center pivot of the pitch change bellcrank (5).

(b) Install push-pull rods (6) into mast and connect to the pitch change bellcrank (5) with bolts (3), washers, and nuts. Torque (30-40 in-lb/3.4-4.5 Nm) nuts and install cotter pins.

NOTE: Check for any binding in the installation by pivoting the walking beam. Apply a lubricant (Tri-Flow brand or equivalent light viscosity lubricant), as required.

(c) Connect the pitch change bellcrank (5) to the mount brackets (3, Figure 9-2) with bolts (4), washers, and nuts. Torque (60-85 in-lb/6.8-9.6 Nm) nuts and install cotter pins.

(10) Install the doglegs (10) as follows: (Figures 12-22)

(a) Position dogleg (10) on the push-pull rod (11) and install nut (9) finger-tight.

NOTE: Doglegs must be re-installed to the respective push-pull rods they were removed from.

(b) Position special tool T-0054 on bell housing of upper swashplate assembly while aligning the dogleg parallel to its respective walking beam on the main rotor hub. Install the screws to hold the tool in place. Place the spacer on each side of the swivel ball in the dogleg and install the bolt to position the dogleg on the tool (Figure 12-24).

(c) Torque the nut (9) to 130-140 in-lb/14.7-15.9 Nm and install cotter pin.

NOTE: When torqueing the nut to align the cotter pin hole, the nut must be turned in the direction of tightening; the nut may not be loosened to line up the cotter pin hole. Replace the nut, washer, spacer, and/or bolt as required if the cotter pin hole will not line up at the 130-140 in-lb/14.7-15.9 Nm torque application.

(d) Repeat steps (1) through (c) on each dogleg.

(11) Install the lower swashplate (Para. 12-10, E).

(12) If required, install the magnetic pickup bracket (17) with screws (19) and washers (18).

(13) Install the fuel tank and connect fuel lines. Install fuel and check for leaks.

(14) Replace side panel cowls.

(15) Perform a maintenance test flight (Para. 12-13).

UNCONTROLLED COPY WHEN DOWNLOADED OR PRINTED

Visit www.enstromhelicopter.com for instructions to order an original manual and to register for email notification of updates.

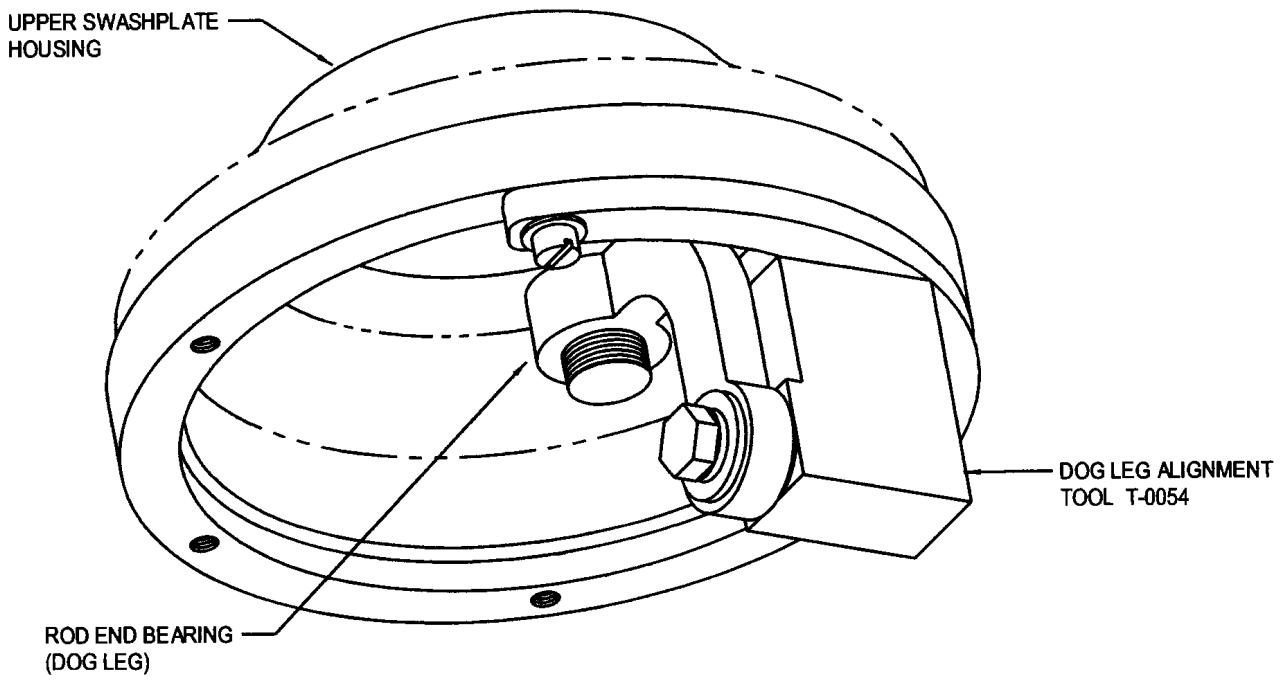

Figure 12-24. Alignment Tool T-0054 for Dog Leg Installation

UNCONTROLLED COPY WHEN DOWNLOADED OR PRINTED

Visit www.enstromhelicopter.com for instructions to order an original manual and to register for email notification of updates.

Table 12-2. Inspection Requirements – Upper Swashplate Assembly

P/N	Fig. 12-22 Item #	Part Name	Inspection*	Serviceable Limits*	Repair Limits*	Repair or Action
28-16132-4	4	Pivot Strap Bushing	I.D. .3750 to .3755	+.0005	Not Repairable	Replace Bushing
P/N	**Fig. 12-23 Item #**	**Part Name**	**Inspection**	**Serviceable Limits***	**Repair Limits***	**Repair or Action**
28-16113-1	1	Nut	Threads (crossed or missing)	None Allowed	Not Repairable	Replace Nut
			Hex corners for rounding or deformation	None Allowed	Not Repairable	Replace Nut
28-16126-1	2	Locking plate				Replace on re-assembly
28-16112-15, -17	3	Bell Housing	Guide tube bore Dia. .9062 to .9069	+.0003	Not Repairable	Replace Housing
			Nicks and gouges	.005 deep	.025 deep	Blend and polish out smooth. Apply Iridite finish.
			Threads (crossed or missing)	None Allowed	Not repairable	Replace Housing
28-16043-19	6	Bearing Retainer	Nicks and scratches	.005 deep	≤.010 deep	Blend and polish out smooth
ECD013-11	8	Bearing	O.D. 3.9370	-.0004	Not Repairable	Replace Bearing
			I.D. 2.5591	+.0000 -.0004	Not Repairable	Replace Bearing
			Condition of balls and cage after cleaning	No pits or flat spots allowed	Not Repairable	Replace Bearing

UNCONTROLLED COPY WHEN DOWNLOADED OR PRINTED

Visit www.enstromhelicopter.com for instructions to order an original manual and to register for email notification of updates.

Table 12-2. Inspection Requirements – Upper Swashplate Assembly

P/N	Fig. 12-23 Item #	Part Name	Inspection*	Serviceable Limits*	Repair Limits*	Repair or Action
28-16108-2, -11	9	Bearing Housing	Bearing bore Dia. 3.9365 to 3.9371	No Tolerance Allowed	Not Repairable	Replace Housing
			Pivot holes for galling or wear	None Allowed	Not Repairable	Replace Housing
			Threads	None Allowed	Not Repairable	Replace Housing
28-16386-1	11	Rain Slinger	Check for deformation	None Allowed	Not Repairable	Replace Slinger
28-16106-2	12	Spacer	Guide tube holes for galling	None Allowed	Not Repairable	Replace Spacer
16-DU-12	13	Bushing	O.D. 1.125	+.0000 -.0005	Not Repairable	Replace Bushing
			I.D. 1.000	+.0005 -.0000	Not Repairable	Replace Bushing
28-16103-1	14	Control Housing	Bushing bore Dia. 1.1250 to 1.1256	+.0004	Not Repairable	Replace Housing
			O.D. 2.6465 to 2.6470	-.0003	Not Repairable	Replace Housing
			O.D. for galling	.001 deep	.005 deep	Polish to Remove
			Cracks	None Allowed	Not repairable	Replace Housing

UNCONTROLLED COPY WHEN DOWNLOADED OR PRINTED

Visit www.enstromhelicopter.com for instructions to order an original manual and to register for email notification of updates.

Table 12-2. Inspection Requirements – Upper Swashplate Assembly

P/N	Fig. 12-23 Item #	Part Name	Inspection*	Serviceable Limits*	Repair Limits*	Repair or Action
28-16260-1	16	Retainer and Guide Shaft Assembly	Sheared or worn rivets	None Allowed	If rivet is sheared with no other damage to assembly	Replace Rivet
			Threads (crossed or missing)	None Allowed	Not Repairable	Replace Guide Shaft in the retainer
			Looseness of guide shaft in the retainer	No movement allowed	Not Repairable	Replace Assembly
			Galling of guide shafts	.001 deep	≤.005 deep and ≤ 1.0” long	Blend and polish out smooth
			Cracks	None Allowed	Not Repairable	Replace Assembly

* All dimensions are in inches.

UNCONTROLLED COPY WHEN DOWNLOADED OR PRINTED

Visit www.enstromhelicopter.com for instructions to order an original manual and to register for email notification of updates.

12-12 MAIN ROTOR PUSH PULL RODS

NOTE: The following was formerly contained in Section 23 and includes data incorporated from SIL 0156. See also SDB 0096.

A. Removal – Main Rotor Push-Pull Rods

(1) Remove the push-pull rod in accordance with Para. 12-11, A, steps 7 through 12.

B. Inspection – Main Rotor Push-Pull Rods (Figure 12-25, Figure 12-26, Figure 12-27)

(1) Inspect the main rotor push-pull rods for corrosion pitting.

(2) Inspect for excessive looseness between steel journal bushing (3) and Teflon bearing insert (2).

(3) Remove and inspect steel journal bushing (3) for galling or roughness.

(4) Inspect Teflon bearing insert (2) for linear damage or wear.

(5) If necessary, remove and replace the Teflon insert.

(6) Reinstall the steel journal bushing.

(7) Inspect bolt (5) for wear or damage and replace as necessary.

(8) Insert bolt (5) into the inboard end of bellcrank (8) and check for looseness.

(9) Inspect steel bushings (9) and (10) for roughness, galling, and wear.

(10) If necessary, press flanged bushings (9) and (10) out the bellcrank (8) and replace.

(11) Repeat for the other two bellcrank/push-pull rod assemblies.

(12) See Table 12-3 for additional detailed inspection requirements for the main rotor push-pull rods.

NOTE: Refer to Table 12-3 to inspect the main rotor push-pull rods during replacement of the main rotor gearbox and whenever the push-pull rod(s) are removed from the aircraft.

C. Installation – Main Rotor Push-Pull Rods

(1) Install the push-pull rods into the mast from the upper end and through the guide tubes in the upper swashplate.

(2) Complete the main rotor push-pull rod installation in accordance with Para. 12-11, F, steps 9 and 10.

UNCONTROLLED COPY WHEN DOWNLOADED OR PRINTED

Visit www.enstromhelicopter.com for instructions to order an original manual and to register for email notification of updates.

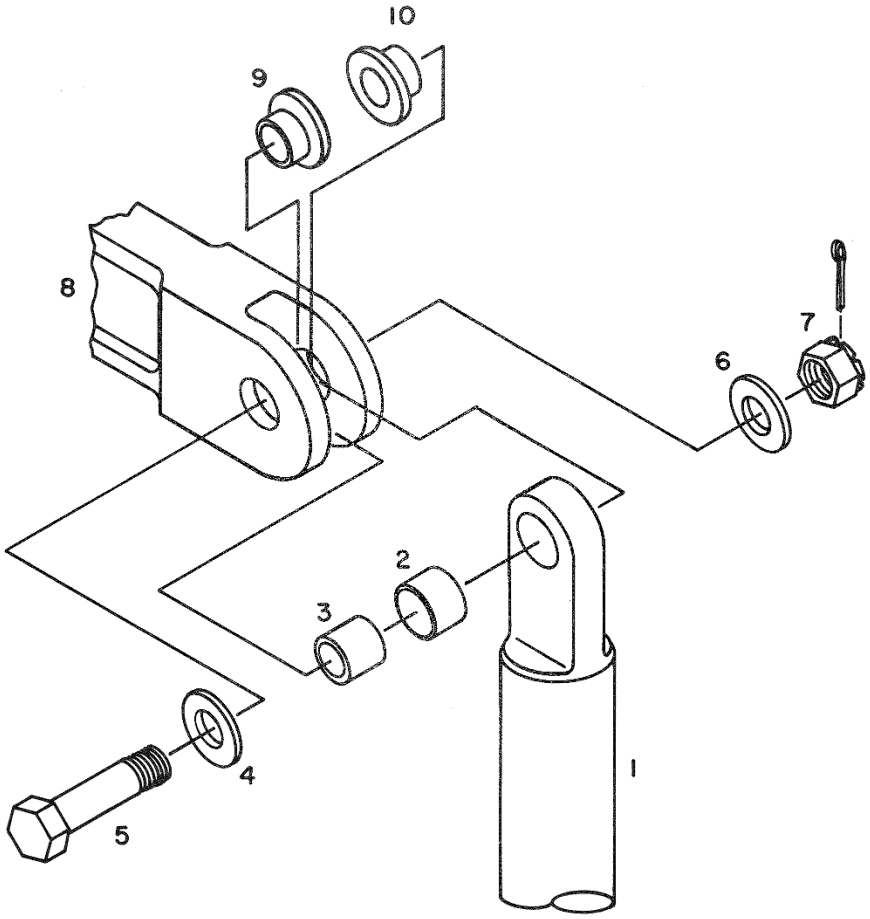

1.	Push-Pull Rod Assembly	6.	Washer
2.	Teflon Bearing Insert	7.	Nut
3.	Bushing	8.	Pitch Change Bellcrank
4.	Washer	9.	Bushing
5.	Bolt	10.	Bushing

Figure 12-25. Main Rotor Push-Pull Rod Installation

UNCONTROLLED COPY WHEN DOWNLOADED OR PRINTED

Visit www.enstromhelicopter.com for instructions to order an original manual and to register for email notification of updates.

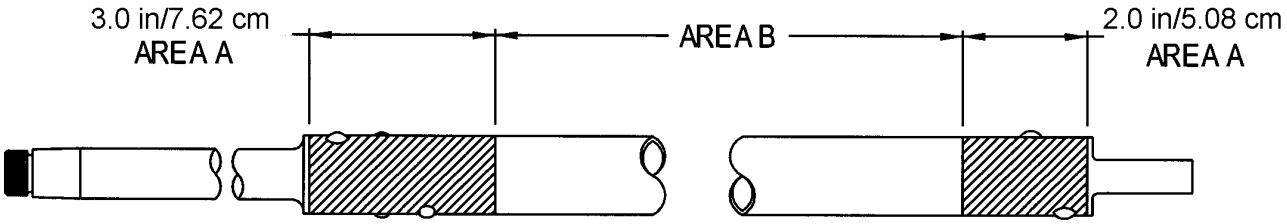

a) Inspection Area Identification

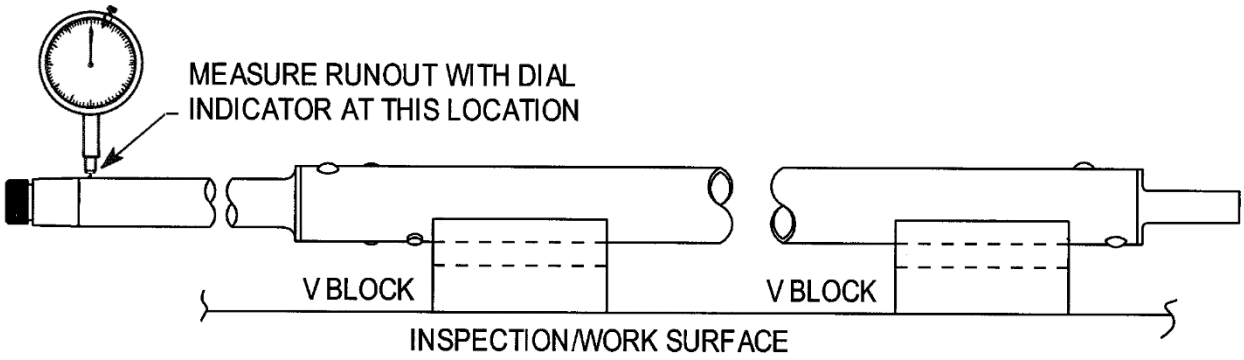

b) Push-Pull Rod Runout Inspection

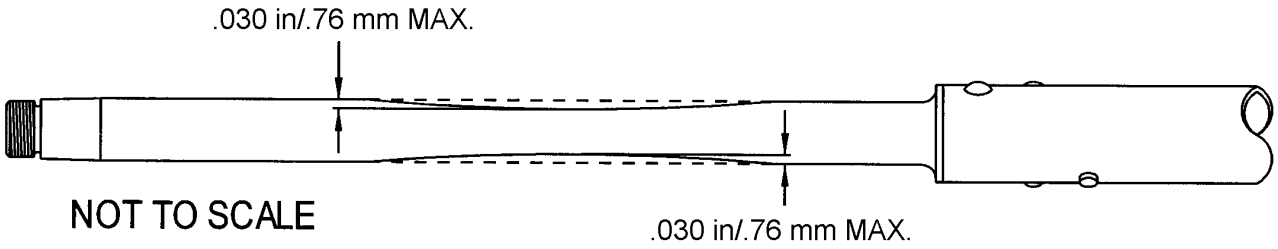

c) Lower Fitting Contact Wear Limits

Figure 12-26. Main Rotor Push-Pull Rod Inspections

UNCONTROLLED COPY WHEN DOWNLOADED OR PRINTED

Visit www.enstromhelicopter.com for instructions to order an original manual and to register for email notification of updates.



Figure 12-27. Main Rotor Push-Pull Rod Corrosion Pitting

UNCONTROLLED COPY WHEN DOWNLOADED OR PRINTED

Visit www.enstromhelicopter.com for instructions to order an original manual and to register for email notification of updates.

Table 12-3. Inspection Requirements – Main Rotor Push-Pull Rod

Part Name	Inspection	Serviceable Limits	Repair Limits	Repair or Action
Push-Pull Rod Assembly	Cracks or Dents	No Tolerance Allowed	Not Repairable	Replace Push-Pull Rod Assembly
	Nicks, scratches, or corrosion in Area A (See Figure 12-26,a)	.007 in /.18mm (See Repair or Action)	.007 in /.18 mm	Blend and polish out smooth
	Nicks, scratches, or corrosion in Area B (See Figure 12-26,a; Figure 27)	.015 in /.38mm (See Repair or Action)	.015 in /.38mm	Blend and polish out smooth
	Bent push-pull rod assembly (See Figure 12-26,b)	.030 in /.76 mm	.030 in /.76 mm	Replace Push-Pull Rod Assembly
Lower Fitting	Cracks	None Allowed	Not Repairable	Replace Push-Pull Rod Assembly
	Contact wear from guide tube assembly (See Figure 12-26,c)	.030 in /.76 mm (See Repair or Action)	.030 in /.76 mm	Blend and polish out smooth
	Threads (rolled or missing)	None Allowed	Not Repairable	Replace Push-Pull Rod Assembly
Upper Fitting	Cracks	None Allowed	Not Repairable	Replace Upper Fitting or Replace Push-Pull Rod Assembly
	Nicks, scratches, or corrosion	.010 in /.25 mm (See Repair or Action)	.010 in /.25 mm	Blend and polish out smooth
	Bore wear on Bearing, P/N MS21240-08-C-12	.505 in/12.83 mm	Not Repairable	Replace Bearing
Vinyl Sleeve	Wear	Worn Through	Not Repairable	Replace Vinyl Sleeve

* Contact wear can be repaired on two sides of the lower fitting. The rod assembly may be rotated 180° and reused when the contact wear reaches the repair limit on one side. Refer to Figure 12-26.

UNCONTROLLED COPY WHEN DOWNLOADED OR PRINTED

Visit www.enstromhelicopter.com for instructions to order an original manual and to register for email notification of updates.

12-13 FLIGHT TEST PROCEDURE

A. Preliminary Checks

NOTE: Whenever a helicopter has had work accomplished to the flight controls, it is recommended that a flight test be conducted before returning the helicopter to service.

(1) Perform a preflight inspection. See Rotorcraft Flight Manual, Section 4.

(2) Perform a Verification of Rigging (Para. 12-7).

(3) Perform normal start and run-up checks to 2300 RPM.

B. Flat Pitch Test (low RPM checks)

NOTE: The following test is used to check rigging of the flight controls.

(1) Adjust engine RPM to 2300 with rotor engaged.

WARNING: CLEAR ALL PERSONS FROM TIP PATH PLANE AREA AS BLADES MAY DIP AS LOW AS 5 FEET DURING THIS TEST.

(2) Displace cyclic fore, aft, and laterally while visually inspecting for proper tip path plane reactions. Center cyclic stick after test.

(3) Displace cyclic laterally to the left until a slight mast bumping is felt through the airframe. Measure the gap between the cyclic stick and the stop ring in the floor. Repeat this procedure for right lateral, fore, and aft. All four positions should have approximately the same distance from stop ring, indicating proper rigging of push-pull tubes. Center cyclic after this procedure.

(4) Trim cyclic stick to neutral position and release cyclic grip. Visually watch cyclic stick for motion. Cyclic should remain centered and still. Move cyclic fore and aft without trimming and check smoothness. No hard vibrations should be present.

NOTE: If hard vibrations are present or the cyclic wanders, either the aircraft will have to be tracked or a problem exists in the main rotor control system.

(5) Displace the left tail rotor pedal approximately 2 inches. Observe engine tach for a drop in RPM indicating proper rigging. Return pedals to neutral position after performing this procedure.

CAUTION: IF AIRCRAFT IS ON A SLIPPERY SURFACE IT MAY TURN DURING THIS TEST.

UNCONTROLLED COPY WHEN DOWNLOADED OR PRINTED

Visit www.enstromhelicopter.com for instructions to order an original manual and to register for email notification of updates.

(6) Retard throttle to idle position and check for disengagement of sprag clutch by observing tachometer needle split.

(7) Smoothly rejoin tach needles and set engine RPM at 3050. Perform normal run-up procedures.

(8) Check throttle for false limit at 3050 RPM. No stop should be contacted prior to 3050 RPM.

(9) Check that engine has 16-19 inches of manifold pressure at 3050 RPM.

NOTE: 19 inches of manifold pressure indicates that adequate autorotational RPM will be available in later tests.

C. Hover Test

(1) With rotor engaged and engine at 3050 RPM, release the collective friction and slowly increase collective pitch. While making minor adjustments to controls, watch for proper response as aircraft becomes light on the skids.

NOTE: If rocking or bouncing occurs at this point the aircraft may need tracking, oleo, or damper work performed.

(2) Bring aircraft to a hover with cyclic stick centered laterally and slightly forward of center in static stop ring.

NOTE: This test should be performed in low wind conditions. If winds are in excess of 10 MPH the cyclic will be displaced in that direction. If aircraft has rough ride, see troubleshooting and tracking procedures for hover track (Para. 12-1 and 12-2).

(3) Pedal position in a hover should be 1/2" to 1" right pedal.

NOTE: Improper pedal position requires tail rotor rigging check at this point. Collective should be in normal position and throttle must not be against false stop or into override.

(4) Stabilize aircraft at a hover and check the following:

(a) Change collective setting up and down approximately one inch and note collective spring loadings. If collective has equal forces in both directions, release throttle to check for override contact.

NOTE: Throttle and collective should remain in position without friction.

(b) Adjust cyclic trim to full left and full aft. The cyclic should have slight right force (approximately 2 lb) with pilot and passenger and "0" forces fore and aft. Record discrepancies in control forces and make adjustments for throttle, cyclic position, and collective position.

NOTE: Do not adjust for minor trim conditions until necessary adjustments for autorotation, V_{NE}, and cruise procedures have been completed which are discussed later in this test procedure.

UNCONTROLLED COPY WHEN DOWNLOADED OR PRINTED

Visit www.enstromhelicopter.com for instructions to order an original manual and to register for email notification of updates.

(5) For left pedal and collective rigging low rpm check, proceed as follows:

(a) Stabilize aircraft at 1 foot hover and normal operating range with heading into the wind.

(b) Slowly reduce engine RPM while maintaining one foot hover. As aircraft reaches 220 rotor RPM, sufficient left pedal should be available to maintain heading into the wind.

(c) Continue to decrease engine RPM until aircraft contacts the ground. The collective up stop should not be contacted until touchdown. This indicates proper collective rigging to upper control arms.

(6) For right pedal rigging check, proceed as follows:

(a) Hover aircraft at one foot heading into wind.

(b) Perform hovering autorotation while maintaining one foot altitude.

(c) As the rotor passes through 220 RPM, the aircraft will settle to the ground.

NOTE: Collective should not contact the up stop prior to ground contact.

(d) Sufficient right pedal should be available until firmly on the ground.

NOTE: If above conditions cannot be met, check rigging of appropriate items.

(7) For 20 MPH hover checks - proceed as follows:

(a) Position aircraft over a flat smooth area.

(b) Hover aircraft at 20 MPH airspeed and normal operating RPM (3050 RPM). Check in both directions laterally, forward and rearward. No stops should be contacted during this phase.

(c) If no stops are contacted, repeat procedure at minimum RPM (2900 RPM).

D. Cruise Flight Test - 75% Power

(1) Perform normal takeoff and level off at 1000' AGL and set altimeter to 29.92. Record pressure altitude, temperature and gross weight information.

(2) Set engine RPM at 3050 and 29" manifold pressure with steady heading approximately 90-95 MPH.

NOTE: Allow two minutes for aircraft to stabilize.

UNCONTROLLED COPY WHEN DOWNLOADED OR PRINTED

Visit www.enstromhelicopter.com for instructions to order an original manual and to register for email notification of updates.

(3) Visually check static ring for cyclic position on pilot's side. Cyclic stick should be centered and slightly aft in the ring.

(4) Trim aircraft to neutral forces. Release cyclic to ensure adequate trim is available.

(5) Change collective setting to check spring forces of collective bungee. Record if other than "0" forces.

(6) Release collective to check that throttle holds position.

E. Autorotation Checks at 60 MPH

NOTE: Pilot must calculate gross weight and predicted density altitude in accordance with the RPM correction chart (Figures 12-28 or 12-29) to avoid overspeeding the rotor while performing the autorotation check.

(1) Climb to 1500 ft AGL. Set up autorotational landing to suitable area.

CAUTION: ENTER AUTOROTATION BY LOWERING COLLECTIVE WHILE MAINTAINING ENGINE RPM. DO NOT EXCEED MAXIMUM ROTOR RPM. SPLIT TACH NEEDLES TO ENSURE ADEQUATE ROTOR RPM FOR AUTOROTATION.

(2) Enter straight into autorotation and adjust airspeed to 60 MPH.

(3) At 60 mph in stabilized autorotation, depress right pedal smoothly to pedal stop. Sufficient pedal should be available to yaw the aircraft to a minimum of 25° to the right of course.

(4) Re-establish autorotational glide at 60 MPH and full down collective.

CAUTION: DO NOT EXCEED MAXIMUM ROTOR RPM.

(5) Record temperature, pressure altitude, gross weight information, and autorotation RPM.

(6) As aircraft approaches 100 ft AGL, power recover by bringing engine rpm to low green. Rejoin tach needles by pulling collective pitch and adjust throttle as necessary while establishing climb.

CAUTION: LAND AIRCRAFT AND MAKE ADJUSTMENTS TO UNSAFE CONDITIONS BEFORE CONTINUING TESTS.

(7) Compare the autorotation RPM to the Autorotational RPM Correction Chart (Figures 12-28 or 12-29). The autorotational RPM should be within ± 5 RPM as indicated on the chart.

(a) Figure 12-28 should be used if the helicopter is based at a location below 6000 ft.

(b) Figure 12-29 should be used if the helicopter is based at a location above 6000 ft.

UNCONTROLLED COPY WHEN DOWNLOADED OR PRINTED

Visit www.enstromhelicopter.com for instructions to order an original manual and to register for email notification of updates.

(8) If the autorotational RPM is not within ± 5 RPM as indicated on the chart, proceed as follows:

(a) Determine the helicopter gross weight for adjusting autorotative RPM by consulting the Autorotational RPM Correction Chart (Figures 12-28 or 12-29).

(b) Adjust rotor RPM.

1 Disconnect the pitch link rod ends at the walking beams on all three blades.

2 Rotate only the disconnected rod ends one full turn (360°).

NOTE: One 360° turn of the rod ends, shortening the pitch links, will decrease autorotative RPM by 10. One turn of the barrel = 20 RPM.

3 Connect the pitch links to walking beams and safety.

4 Secure the jam nuts.

(c) Flight check for performance.

F. V_H and V_{NE} Checks

(1) Fly aircraft to 1000 feet AGL. Record pressure altitude, temperature, and gross weight information.

(2) Adjust engine RPM to 3050 with 39" manifold pressure in level flight.

(3) Allow two minutes for aircraft to stabilize. Record airspeed.

CAUTION: DO NOT EXCEED V_{NE} SPEED ENVELOPE OR MAXIMUM MANIFOLD PRESSURE DURING THIS TEST.

(4) Visually inspect cyclic position in static stop ring. Cyclic should be centered laterally with a minimum of 1/2" clearance to aft portion of static stop ring.

(5) Trim aircraft and check for zero forces fore and aft. Check for zero lateral forces at 110 mph by momentarily releasing grip after trimming. Aircraft should maintain level flight.

(6) Adjust engine RPM and repeat step (4) above.

(7) Record discrepancies, land and make corrections.

G. Flight Check – Lateral Trim

NOTE: Flight check with a pilot and passenger, approximately 360 lb.

(1) Hover - Cyclic should have approximately 2 lb left force (pressure to the right) with full lateral trim.

UNCONTROLLED COPY WHEN DOWNLOADED OR PRINTED

Visit www.enstromhelicopter.com for instructions to order an original manual and to register for email notification of updates.

NOTE: If aircraft is adjusted to obtain full lateral trim in a hover, it will not be able to obtain full lateral trim in forward flight.

(2) Forward Flight - Flying to 110 mph and trimmed laterally, the aircraft should fly straight and level with full trim (no yaw to left or right.

Lateral Cyclic Positions:

(3) Hover (no wind) - Cyclic stick bellcrank should be centered in cyclic stop ring in floor.

(4) Forward flight at 75% power (28" MP) – Cyclic stick should be centered (same as hover) but bellcrank should be slightly aft in stop ring.

(5) Forward Flight at V_{NE} – Cyclic stick bellcrank should be centered laterally and have approximately clearance from aft portion of stop ring.

(a) F-28F: Sea level conditions (112 mph), low rotor rpm – 334.

(b) 280FX: Sea level conditions (117 mph), low rotor rpm – 334.

UNCONTROLLED COPY WHEN DOWNLOADED OR PRINTED

Visit www.enstromhelicopter.com for instructions to order an original manual and to register for email notification of updates.

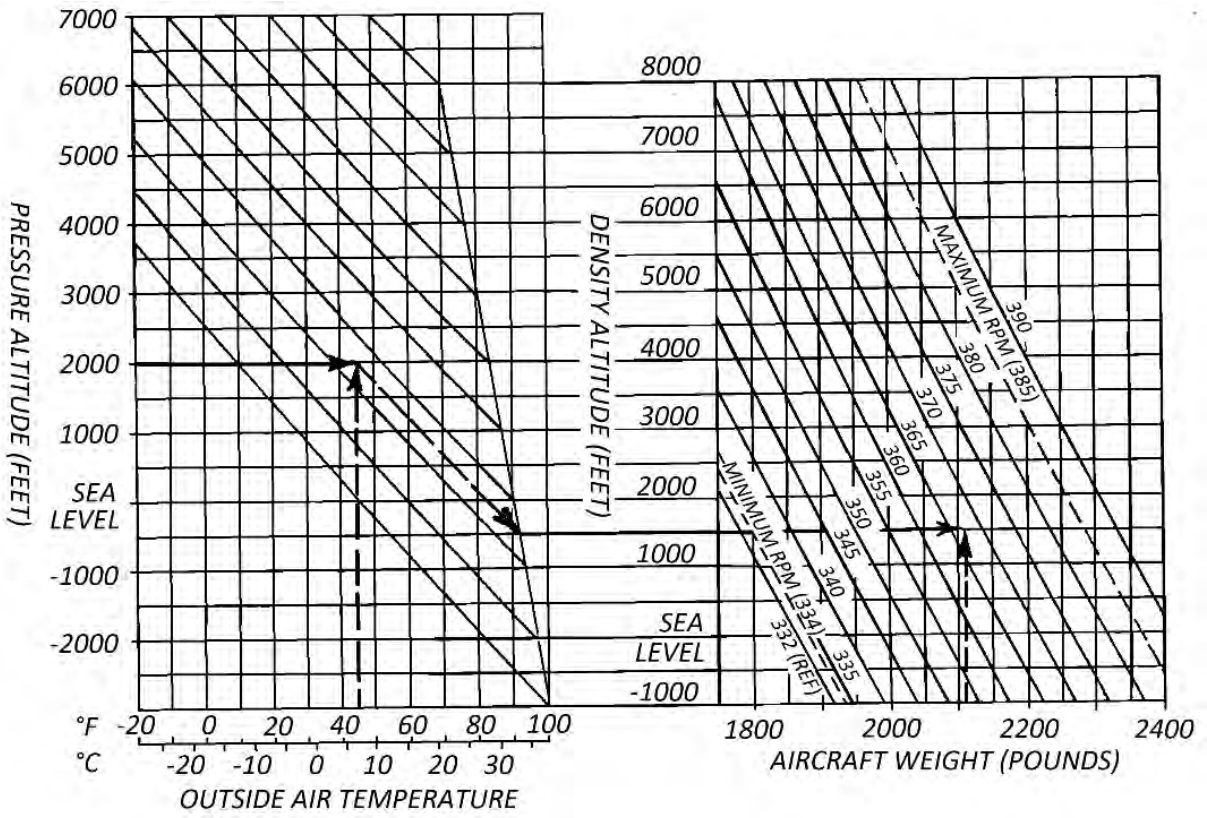

Example:

RPM checked passing through 2000 ft pressure altitude. OAT at this altitude: 45°F (7°C); Density altitude is 1500 ft; Aircraft weight when RPM was checked: 2110 lb.
* Autorotation RPM should be 367 with collective full down.

Check RPM in steady 60 MPH autorotation with the collective full down. Record pressure altitude (altimeter set to 29.92), OAT, rotor RPM, and aircraft weight.

Do not exceed 385 RPM or drop below 334 RPM

Figure 12-28. Autorotational RPM Correction Chart – Sea Level Base Altitude

UNCONTROLLED COPY WHEN DOWNLOADED OR PRINTED

Visit www.enstromhelicopter.com for instructions to order an original manual and to register for email notification of updates.

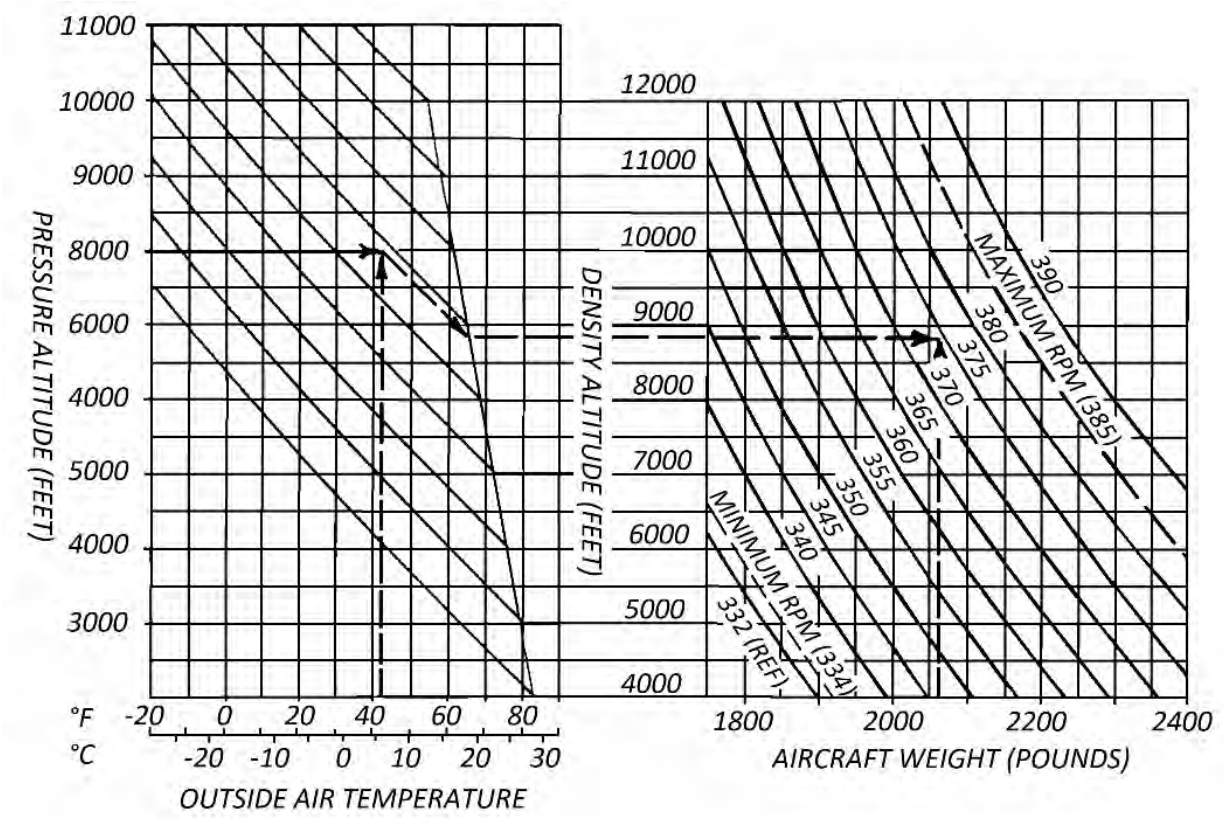

Example:

RPM checked passing through 8000 ft pressure altitude. OAT at this altitude: 42°F (6°C); Density altitude is 8800 ft; Aircraft weight when RPM was checked: 2060 lb.
* Autorotation RPM should be 374 with collective full down.

Check RPM in steady 60 MPH autorotation with the collective full down. Record pressure altitude (altimeter set to 29.92), OAT, rotor RPM, and aircraft weight.

Do not exceed 385 RPM or drop below 334 RPM.

Figure 12-29. Autorotational RPM Correction Chart – 6000 Ft Base Altitude

UNCONTROLLED COPY WHEN DOWNLOADED OR PRINTED

Visit www.enstromhelicopter.com for instructions to order an original manual and to register for email notification of updates.

SECTION 13

POWERPLANT AND ASSOCIATED SYSTEMS

TABLE OF CONTENTS

Paragraph			Page
13-1	**Powerplant**		**MM-13-3**
	A.	General Description	MM-13-3
	B.	Operating Specifications	MM-13-3
13-2	**Engine**		**MM-13-5**
	A.	Engine and Turbocharger Troubleshooting	MM-13-5
	B.	Preparation for Engine Removal for Replacement or Overhaul	MM-13-10
	C.	Removal	MM-13-14
	D.	Inspection Prior to Engine Reinstallation	MM-13-14
	E.	Installation	MM-13-17
	F.	Cylinder Removal in Helicopter	MM-13-20
	G.	Cylinder Installation	MM-13-21
13-3	**Engine Exhaust System**		**MM-13-22**
	A.	General Information	MM-13-22
	B.	Exhaust Manifold Removal	MM-13-22
	C.	Exhaust Manifold Inspection	MM-13-23
	C.1	Exhaust Manifold Disassembly	MM-13-24
	C.2	Exhaust Manifold Shimming	MM-13-25
	D.	Exhaust Manifold Installation	MM-13-28
	E.	Wastegate Operational Check	MM-13-29
	F.	Wastegate Rigging	MM-13-29
	G.	Wastegate Removal	MM-13-30
	H.	Wastegate Inspection	MM-13-30
	I.	Wastegate Installation	MM-13-30
	J.	Wastegate – Clamp Replacement	MM-13-31
	K.	Wastegate – Wastegate Replacement	MM-13-32
13-4	**Fuel Injection System**		**MM-13-34**
	A.	General Information	MM-13-34
	B.	Fuel Injection System Troubleshooting	MM-13-34
	C.	General Operating Information	MM-13-37
	D.	Injector	MM-13-38
	E.	Mixture Control	MM-13-47
	F.	Automatic Mixture Control (AMC)	MM-13-50
	G.	Fuel Servo Screen	MM-13-51
	H.	Fuel Flow Divider	MM-13-52
	I.	Air Bleed Nozzles	MM-13-52
13-5	**Turbocharger**		**MM-13-57**
	A.	General Information	MM-13-57
	B.	Turbocharger Removal	MM-13-57
	C.	Turbocharger Inspection	MM-13-58
	D.	Turbocharger Installation	MM-13-62
	E.	Turbocharger Repair	MM-13-68
13-6	**Turbocharger Static Air Pressure System**		**MM-13-72**
	A.	General Information	MM-13-72
	B.	Turbocharger Static Air Fuel Nozzle Pressure System Troubleshooting	MM-13-72
	C.	Ambient Air Check Valve	MM-13-72

UNCONTROLLED COPY WHEN DOWNLOADED OR PRINTED

Visit www.enstromhelicopter.com for instructions to order an original manual and to register for email notification of updates.

SECTION 13

POWERPLANT AND ASSOCIATED SYSTEMS

TABLE OF CONTENTS (CONTINUED PAGE MM-13-2)

Paragraph		Page
13-7	**Primary Airflow System**	**MM-13-74**
	A. General Information	MM-13-74
	B. Air Filter and Housing	MM-13-75
	C. Induction System Leak Checklist	MM-13-78
13-8	**Cooling System**	**MM-13-79**
	A. General Information	MM-13-79
	B. Fan Assembly	MM-13-79
	C. Fan Shroud	MM-13-82
	D. Firewall Repairs	MM-13-84
13-9	**Ignition System**	**MM-13-86**
	A. General Information	MM-13-86
	B. Ignition System Troubleshooting	MM-13-86
	C. Vibrator-Magneto Check	MM-13-88
	D. Magneto Operation Check	MM-13-89
	E. Magneto	MM-13-89
	F. Harness Assembly	MM-13-94
13-10	**Fuel System**	**MM-13-95**
	A. General Information	MM-13-95
	B. Fuel Tanks	MM-13-95
	C. Fuel Boost Pump	MM-13-103
	D. Engine-Driven Fuel Pump	MM-13-104
	E. Fuel Filter	MM-13-107
	F. Fuel Pressure Switch	MM-13-110
	G. Fuel Shutoff Valve	MM-13-111
13-11	**Lubrication System**	**MM-13-112**
	A. Description	MM-13-112
	B. Oil Coolers	MM-13-113
	C. Scavenge Pump	MM-13-115
13-12	**Correlator**	**MM-13-116**
	A. Operating Principles	MM-13-116
	B. Injector Rigging	MM-13-117
	C. Verifying Proper Correlator Operation	MM-13-119
	D. Troubleshooting the Correlator	MM-13-119
	E. Correlator Preflight Rigging	MM-13-122
	F. Correlator Post-Flight Rigging	MM-13-123
	G. Adjusting the Correlator After Maintenance	MM-13-124
13-13	**Correlator Throttle Cable**	**MM-13-125**
	A. Removal	MM-13-125
	B. Installation	MM-13-125

UNCONTROLLED COPY WHEN DOWNLOADED OR PRINTED

Visit www.enstromhelicopter.com for instructions to order an original manual and to register for email notification of updates.

13-1 POWERPLANT

A. General Information

The "F" model Enstrom helicopter utilizes a Lycoming air-cooled horizontally opposed four-cylinder direct drive engine, model HIO-360-F1AD. The engine is turbocharged by Enstrom, giving it the power capability of maintaining 225 HP up to a 12,000 foot density altitude.

The engine is mounted in the center airframe pylon by a dynafocal mount system attached to the rear engine case facing forward in the helicopter. The turbocharger is mounted to a tubular frame that is attached to the rear engine crankcase and accessory housing and is easily removable. Easy access to the engine is provided by two large, hinged panels, one on either side of the helicopter and another removable panel, located in the cabin firewall, for access to the rear engine accessory section.

B. Operating Specifications

Powerplant Limitations

Engine	Lycoming model HIO-360-F1AD with Rajay (Hartzell) model 3BT5EE10J2 turbocharger (600700-0000)
Fuel	(Refer to Table 4-1)
Oil viscosity	(Refer to Table 4-1)
Horsepower	225 HP at 3050 rpm, 39.0 in Hg manifold pressure
Operating rpm	3050 maximum 2900 minimum
Idle rpm	1500 minimum (clutch disengaged)
Manifold pressure	39.0 in Hg, Sea level to 12,000 ft density altitude
TIT	1650°F maximum

NOTE: The TIT gauge on early F series helicopters was originally labeled as an EGT gauge.

Oil temperature	245° maximum
Oil pressure	Normal – 50 to 95 psi Idling – 25 psi minimum Starting and warmup – 115 psi
Main rotor gearbox	225°F maximum

UNCONTROLLED COPY WHEN DOWNLOADED OR PRINTED

Visit www.enstromhelicopter.com for instructions to order an original manual and to register for email notification of updates.

Cylinder head temp.	500°F maximum
Fuel mixture	Engine may be leaned at 75% power or below to 1600°F on rich side of peak. NEVER exceed 1650°F TIT. Mixture must be full rich for landing and takeoff regardless of power for proper engine cooling.

Rotor - Flight Limitations (Power Off)

Maximum	385 rpm
Minimum	334 rpm

Instrument Markings

Rotor tachometer	red line red line green arc	385 rpm 334 rpm 334-385 rpm
Engine tachometer	red line red line green arc	3050 rpm 2900 rpm 2900-3050 rpm
Airspeed indicator	red line	112 mph (F-28F) 117 mph (280F) 117 mph (280FX)
Manifold pressure	red line	39.0 in Hg
Engine oil temp.	red line green arc yellow arc	245°F 120-245°F 60-120°F
Oil pressure	red line red line green arc yellow arc	100 psi 25 psi 60-100 psi 25-60 psi
TIT	red line	1650°F

NOTE: The TIT gauge on early F series helicopters was originally labeled as an EGT gauge.

Cylinder head temp.	red line green arc	500°F 200-500°F
Transmission oil temp.	red line green arc	225°F 0-225°F

UNCONTROLLED COPY WHEN DOWNLOADED OR PRINTED

Visit www.enstromhelicopter.com for instructions to order an original manual and to register for email notification of updates.

13-2 ENGINE

A. Engine and Turbocharger Troubleshooting

Experience has proven that the best method of troubleshooting is to analyze all symptoms of the problem and carefully eliminate any systems that are not contributing to it. The following troubleshooting chart has been prepared to help the maintenance personnel pinpoint the problem areas by focusing on specific engine operating symptoms. In the following charts these are depicted by the major headings followed by the most probable cause and remedy.

NOTE: The remedies and/or actions in the following charts are in an abbreviated form. For full description of any of the problems turn to the specific paragraph in the following sections of the Powerplant Section.

NOTE: In addition to the troubleshooting guide below, refer to Lycoming SI 1427 (latest revision) for steps pertaining to engine break-in, including engine preparation for ground operational tests, flight tests, after-flight tests, and oil consumption limits.

Problem	Possible Cause	Action
Failure of engine to crank over.	Dead battery, starter relay defective, defective starter or corroded terminals on ground or battery leads, defective starter switch on collective.	Self-explanatory.
Failure of engine to start.	Lack of fuel to engine.	Check main fuel valve “ON,” fuel level, boost pump pressure, filters, and mixture setting.
	Ambient air check valve stuck closed. May be accompanied by induction tube sump valve fuel leakage or backfire.	Clean valve or replace.
	Shower of sparks inoperative, no buzz from vibrator.	Check for low voltage to ignition circuit during cranking (9.5V min.), defective vibrator relay, or corroded connections.
	Sump valves stuck open, accompanied by backfire or popping.	Clean all three sump valves.
	Magneto inoperative or “P” lead grounded.	Check ignition lead for spark, or breakage. Check retard action, and “P” lead connections.
	Engine kicks back.	Check shower of sparks vibrator relay operation, check retard timing and breaker action, magneto timing, damaged distributor cap or shorting internally.

UNCONTROLLED COPY WHEN DOWNLOADED OR PRINTED

Visit www.enstromhelicopter.com for instructions to order an original manual and to register for email notification of updates.

Problem	Possible Cause	Action
Failure of engine to start, accompanied by puffing black smoke from exhaust stack, fuel dripping from sump valves.	Severe flooding.	Review starting procedure.
	Excessive priming.	Review starting procedure.
	Servo center body seal leak.	Replace servo.
	Servo mixture valve plates leaking.	Remove and repair mixture valve plates.
	Excessive fuel boost pressure.	Reduce duration of priming – check fuel boost pressure.
Failure of engine to idle properly.	Incorrect idle mixture setting.	Correct idle mixture setting.
	Leak in induction system, sump drain valves stuck open.	Check induction system for leaks, check operation of sump drain valves.
		Check the turbocharger adapter gasket and weld condition. (Refer also to SIL 0163)
	Incorrect idle air adjustment.	Adjust throttle stop to obtain correct idle speed.
	Dirt in air side of fuel nozzle.	Carefully clean nozzles.
	Bad or fouled spark plugs.	Replace or clean as required.
	Shorting of ignition lead.	Check ignition leads.
Unable to pull full rated power, missing, or engine twitching in mounts.	Mixture too rich, indicated by sluggish operation, red exhaust flame, black soot residue in exhaust stack and smoky black exhaust.	Check fuel servo for proper fuel output metering.
	Partially clogged or clogged fuel injection nozzle or nozzles on either fuel or air side.	Clean as required.
	Air leaks in the air induction system, sump drain valves stuck open.	Check induction system for leaks, clean sump drain valves.
	Inadequate fuel supply, servo mis-rigged, restricted static air nozzle in fuel system, usually accompanied by high temperatures, ambient air check valve stuck open.	Check fuel flow, filters and rigging of controls.
	Restriction in air intake.	Check ducting, condition of filter and intake scoop.
	Air leak at the air cleaner seal.	Check condition of seal.

UNCONTROLLED COPY WHEN DOWNLOADED OR PRINTED

Visit www.enstromhelicopter.com for instructions to order an original manual and to register for email notification of updates.

Problem	Possible Cause	Action
Unable to pull full rated power, missing, or engine twitching in mounts. (Continued)	Turbocharger wastegate and throttle override not functioning properly.	Check wastegate for proper operation, rigging and over-ride actuator ride, internal heat erosion.
	Leak in engine exhaust system, reducing exhaust pressure to turbo system.	Check exhaust flange gaskets, turbo gaskets and couplings or system tube failures.
	Turbo rotating assembly rubbing on housing, distorted housing, dirt accumulation on impeller, carbon build-up, or foreign object damage, bearing seizure.	Check freedom of assembly. Allowable shaft radial play is .017 to .028 inch (.43 to .71 mm) on bearings, allowable shaft axial play is .004 to .009 inch (.10 to .23 mm).
	Engine timing is slightly off	Check timing to required specifications.
	NOTE: During magneto check, if TIT has a variance of more than 100° from R to L magneto, check timing.	
	High speed ignition, high tension leak or faulty spark plugs.	Check wiring harness and plugs.
Engine will not accelerate from idle.	Idle mixture set too lean, fuel pressure too low, fuel supply restricted, or air supply restricted.	Check idle mixture, fuel pressure, supply, and air intake obstruction.
Engine accelerates from idle but is rough and erratic.	Idle mixture on lean side, servo too rich or center body pin hang-up caused by internal misalignment.	Check mixture or replace servo.
Rough engine operation at high power settings.	Engine mounts deteriorated or improper torque.	Check mounts, belts, and torque.
	Plugged or partially plugged fuel nozzle (air or fuel side). This is indicated by higher than normal fuel flow and slight increase in MAP.	Clean fuel nozzles thoroughly.
	Misfiring of ignition system, high tension leak, fouling spark plug.	Check fuel octane rating, reduce power, and increase mixture setting.

UNCONTROLLED COPY WHEN DOWNLOADED OR PRINTED

Visit www.enstromhelicopter.com for instructions to order an original manual and to register for email notification of updates.

Problem	Possible Cause	Action
Low oil pressure at operating rpm.	Insufficient oil supply, improper grade of oil, excessive operating temperatures.	Check oil level, grade of oil, increase mixture setting for high ambient temperatures.
	Oil pressure relief valve hung up, defective or loose.	Check oil pressure relief valve setting and operation.
	Oil leakage from lines or fittings.	Check all lines and fittings.
	Oil pump failing or sump suction screen partially blocked.	Check oil pump output and suction screen.
High oil and cylinder head temperatures.	Insufficient cooling air to engine and oil coolers.	Check cooling air inlet for obstruction, check cylinder fins for excessive dirt accumulation, check oil cooler inlets for dirt and debris.
	Insufficient quantity of oil or improper grade.	Check oil level and grade.
	Operating at excessively high power settings exceeding TIT limitations.	Reduce power, increase mixture settings.
Excessive oil consumption.	Improper grade of oil, turbo seals failed, engine ring and/or valve clearance out of limits.	Check grade of oil. If turbo seals are bad, oil seepage from induction sump valves may occur after parking, and this oil may be found in turbo assembly. This condition is usually indicated by excessive exhaust smoke on start-up and at idle.
	On new engines or rebuilt engines, ring may not be properly sealed.	Continue to break in engine with recommended oil until oil consumption stabilizes.
	NOTE: Regarding power settings during break-in period, refer to Lycoming SI 1427 (latest revision).	
	Glazed cylinder walls, caused by improper engine operation during break-in period.	Cylinders must be removed and reworked by honing.

UNCONTROLLED COPY WHEN DOWNLOADED OR PRINTED

Visit www.enstromhelicopter.com for instructions to order an original manual and to register for email notification of updates.

Problem	Possible Cause	Action
Excessive oil consumption. (Continued)	Clogged engine crank-case breather vent line. In cold weather frost can restrict this vent and cause nose seal to fail or pump oil.	Clean vent of sludge, be sure small side vent in tube inside of cowl line is clear and open. This will allow engine to breathe properly if the exposed portion below frosts closed.
Loss of, reduction of, or fluctuation of manifold pressure when turbocharging.	Malfunction of MAP indicator may be the result of debris in the MAP reference line to engine.	Clear line and re-check.
	Air intake restriction, duct collapsing, or air filter blocked or icing.	Check condition of ducting.
	Turbo output leakage through induction system, loose duct, adapter or collar, failure of intake pipe.	Check complete induction system for leaks or failures.
	Partial fuel vapor locking due to hot fuel, altitude, or combination of both with high power settings, may be accompanied by detonation.	Reduce power.
	Malfunctioning fuel pump or pressure regulator, blown seal or leaking pump deck pressure line.	Reduce power. If engine begins to detonate, terminate operation.
Engine runs hot during turbocharging.	Ambient temperatures too hot.	Reduce power to safe TIT levels.
	Over-boosting or mixture too lean.	Reduce power to proper MAP and TIT limitations. Increase mixture setting.
	Ignition timing off.	Check timing to required specification.
Oil in turbocharger or in exhaust pipe on shutdown.	Oil input line check valve stuck open.	Clean or replace check valve.

UNCONTROLLED COPY WHEN DOWNLOADED OR PRINTED

Visit www.enstromhelicopter.com for instructions to order an original manual and to register for email notification of updates.

B. Preparation for Engine Removal for Replacement or Overhaul

The engine is removed as a unit with components of engine associated systems and engine accessory items (alternator, starter, magnetos, wiring harness, etc.) attached to the engine (Figure 13-1).

(1) Disconnect battery.

(2) Remove segmented cowl, baggage box, side panels, lower cowling, and engine compartment doors (Para. 8-11).

(3) Remove fuel tanks and drain fuel lines (Para. 13-10, B).

NOTE: Upon removal all line, fittings and/or openings to engine, tanks or coolers should be plugged with dust caps or covers to protect from contamination.

(4) Drain oil from engine, oil coolers and oil lines.

(5) Remove jack strut and fan assembly (Para. 13-8, B, (1)).

(6) Remove main rotor transmission (Para. 11-6, B).

NOTE: Utilizing some type of overhead lifting device is recommended as the easiest and safest method of engine removal. If overhead lifting capability is not available, it will not be necessary to remove the transmission (step 6) or install lifting ring (step 10).

(7) Disconnect fuel line from the fuel shutoff valve and detach the doubler encircling the fuel line at the fire curtain.

(8) Remove upper engine baffling.

(9) Remove or detach fire curtain as required.

(10) Remove primary oil cooler (right side) (Para. 13-11, B, (1), (a)).

(11) Remove induction air box and ducting (Para. 13-7, B, (4)).

(12) Disconnect exhaust gas temperature probes and remove exhaust system, wastegate, and associated flexible ducting.

(13) Detach fan shroud from engine and remove mount brackets from top and bottom of engine.

(14) Pull fan shroud and secondary oil cooler away from engine.

(15) Detach clutch cable clamps from bay tube.

(16) Disconnect fuel lines from main fuel strainer, if installed on the bay tubes.

NOTE: Later model helicopters have the fuel strainer located on the left side lower pylon longeron.

UNCONTROLLED COPY WHEN DOWNLOADED OR PRINTED

Visit www.enstromhelicopter.com for instructions to order an original manual and to register for email notification of updates.

(17) Remove bay tubes.

(18) Remove sump drain lines and valves.

(19) Disconnect fuel inlet line to fuel pump, scavenge pump inlet line, and remove fuel pump drain line.

(20) Disconnect engine ground strap starter and alternator wiring.

(21) Remove turbocharger (Para. 13-5, B).

(22) Remove fuel injection servo with inlet air adapter and flexible duct.

(23) Disconnect static pressure lines from induction tube and remove induction tube.

(24) Disconnect static pressure line from fuel pump.

(25) Disconnect tach drive, oil cooler oil lines and crankcase breather tube from engine.

(26) Disconnect oil temperature, pressure, and cylinder head temperature probes.

(27) Remove fuel pressure lines from flow divider.

(28) Disconnect magneto primary leads.

(29) Remove static pressure manifolds from engine baffling.

(30) Remove top ignition wires from engine baffling.

(31) Remove remaining engine baffling.

(32) Remove oil filler tube.

(33) Remove turbocharger and injector mount brackets.

(34) Install caps or plugs on all disconnected lines, fittings, and engine openings to prevent contamination.

(35) Position all lines, wires, etc. to prevent interference with engine removal.

UNCONTROLLED COPY WHEN DOWNLOADED OR PRINTED

Visit www.enstromhelicopter.com for instructions to order an original manual and to register for email notification of updates.

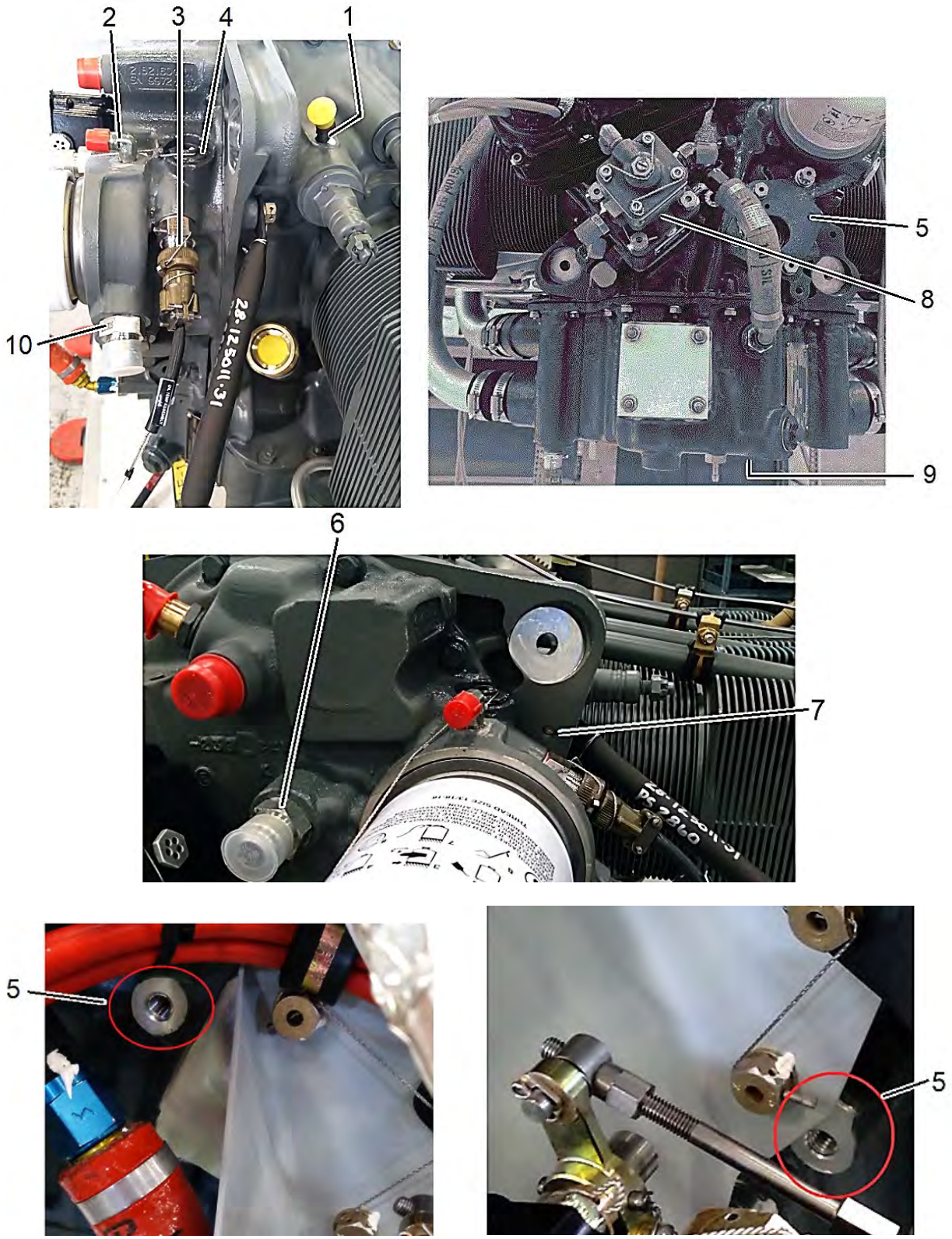

Figure 13-1. Engine Accessory Section

Visit www.enstromhelicopter.com for instructions to order an original manual and to register for email notification of updates.

Figure 13-1 Legend

1. Engine oil pressure fitting: restricted fitting required. (Refer to Note in Para. 13-2, D, (3).)

2. Restricted turbo oil outlet fitting location.

3. Engine oil temperature probe fitting location.

4. Chamfered case plug location.

   NOTE: Upper right photo shown with bracket 28-123022-11 uninstalled. See lower left and right photos for clarity.

5. Check tapped stud holes for breakthrough of case to prevent oil leakage.

6. Oil outlet

   CAUTION: DO NOT OVERTORQUE FITTING (140-160 IN-LB MAX. (15.8-18.1 NM MAX), 20% LESS IF ENGINE IS HOT). CASE MAY CRACK.

7. Turbo mount hole – must be threaded to receive mount bolt. (Bolt is inserted from the other side.)

8. Scavenge pump and piggy-back fuel pump installation.

9. Check engine sump for a machined flat and tapped holes (1/4-20 UNC-3B) to receive turbo mount bracket.

10. Inlet

    CAUTION: DO NOT OVERTORQUE FITTING (140-160 IN-LB MAX. (15.8-18.1 NM MAX), 20% LESS IF ENGINE IS HOT). CASE MAY CRACK.

    NOTE: Images may not depict complete installation of engine.

UNCONTROLLED COPY WHEN DOWNLOADED OR PRINTED

Visit www.enstromhelicopter.com for instructions to order an original manual and to register for email notification of updates.

C. Engine – Removal

(1) Install lifting ring; attach at third case half bolt from the accessory case.

(2) Support the weight of the engine with the lifting device.

(3) Remove the four mount bolts and mount assemblies.

(4) Lower engine to a suitable support on the floor, tilting it as necessary to allow accessories to clear pylon.

(5) Remove any remaining lines, fittings, brackets, probes, and accessories as required, preparing the engine for overhaul and replacement.

D. Inspection Prior to Engine Reinstallation

(1) Engine Compartment

(a) Check engine mount rings and tubes for cracks or distortion.

(b) Check pylon for worn spots, distorted tubes, cracks at welded joints and corrosion.

(c) Check firewall for loose fittings, cracks, and holes.

(d) Inspect fire curtain for general condition. Repair or replace as necessary (Para. 13-8, D).

(e) Inspect mounts for checks, cracks, deformity, and age hardening. Replace as required.

(f) Check electrical panel for security and condition of wiring, and clean ground connections.

(g) Clean main fuel sump screen.

(h) Check oil cooler for cracks, damaged fins, seal deterioration, and restrictions to airflow.

CAUTION: IF ENGINE REMOVAL WAS NECESSARY DUE TO INTERNAL ENGINE FAILURE, IT WILL BE NECESSARY TO FLUSH OIL LINES AND COOLERS WITH MINERAL SPIRITS, KEROSENE, ETC. TO ENSURE REMOVAL OF ALL POSSIBLE CONTAMINANTS. INSPECT TURBOCHARGER AND OIL LINES FOR DAMAGE OR CONTAMINATION.

NOTE: Oil coolers must be sent out for overhaul if oil exhibits metal contamination.

UNCONTROLLED COPY WHEN DOWNLOADED OR PRINTED

Visit www.enstromhelicopter.com for instructions to order an original manual and to register for email notification of updates.

(2) Associated Engine Components

(a) Check all lines, hoses, fittings, and seals for evidence of deterioration, damage, or contamination.

(b) Check exhaust system for cracks and distortion of mounting flanges.

(c) Check wastegate for evidence of internal heat erosion, freedom of movement, cracks, and distortion.

(d) Check exhaust tube matting flanges and V clamps for distortion and cracks.

(e) Check heater muff and heat exchanger for evidence of cracks or deterioration.

(f) Check turbocharger for freedom of rotation, cracks, indications of leakage, condition of heat shroud, condition of adapter gasket and security (Para. 13-5, C, (2) and Para. 13-5, D, (1)), and security of fittings.

(g) Check turbo mount tubing and fittings for cracks, distortion, and excessive corrosion.

(h) Check intake induction tube for cracks or distortion of mounting flange, mating duct adaptor for deterioration, and damage to the clamps and security of clamp installation (Para. 13-5, C, (3) and Para. 13-5, D, (10)).

(i) Check static air fuel nozzle vent check valve for dirt contamination and freedom of movement at low pressures.

(j) Check three sump drain valves, two in bottom engine sump and one low point in intake induction tube, for sticking or clogging.

NOTE: These valves are open in a neutral pressure position; a slight positive or negative pressure will close them.

(k) Check engine baffling, fan shroud and fan for cracks, galling, or other damage.

NOTE: For full inspection requirements, see specific section identified.

(3) Engine Preparation Prior to Installation

NOTE: Refer to Figure 13-1 for numbered items.

NOTE: Some engines may have had an oil pressure restrictor fitting installed during engine overhaul, in the field, or by compliance with SDB 0123. If the fitting is engraved with the letter “R” or “D”, a restrictor fitting is installed. If no engraving is detected, verify if the fitting is a restrictor fitting in accordance with SDB 0123.

(a) Check mounting points on rear and case of new or rebuilt engine; hole on right upper rear case flange must be drilled and tapped for turbo mount bolt (7). Check bottom aft lower right sump for flatness (9) and turbo mount clearance to drain boss radius.

UNCONTROLLED COPY WHEN DOWNLOADED OR PRINTED

Visit www.enstromhelicopter.com for instructions to order an original manual and to register for email notification of updates.

(b) Transfer restricted oil pressure fitting (1) (P/N ECD110-11 or P/N 02A22619). Torque 30-40 in-lb/3.4-4.5 Nm.

(c) Transfer restricted oil feed fitting (2) to turbo.

(d) Transfer oil return line fitting from scavenge pump (8).

(e) Transfer oil inlet and outlet fittings (6 and 10).

(f) Check four tapped stud holes (5) in accessory housing for break-through. If they show evidence of breaking through the case, the holes will have to be drilled and tapped to seal them or the accessory housing will have to be replaced.

(g) Transfer case plug (4) to upper port and safety (MS20995C32).

(h) Install oil temperature pick-up (3) in lower port.

NOTE: If a new plug is being used, machine the edge of the nut so that it will not contact the engine mount lug on the pylon. If a used plug is installed, the previously machined section of the nut may not align in the correct position; it will also need to be machined. (Plug is available as P/N 28-121018-11; use new crush washer P/N MS35769-11.)

NOTE: Items (a), (b), (c), (e), (f), and (g) must be accomplished prior to engine installation. If not, engine may have to be removed to perform.

(i) Remove fuel pump, transfer scavenge pump and bolts, and install fuel and scavenge pump. Apply Loctite 1552029 gasket sealant to the fuel pump bolts on installation.

NOTE: Verify a 0.014-0.020” restrictor fitting is installed on the fuel pump. The restrictor fitting should be stamped or marked with the letter “R”. (Reference Lycoming Service Bulletin 497 and AD 91-08-07.)

(j) Check security of oil filter.

(k) Check condition and security of magneto. Be sure fuel pressure line clamp support is attached under upper bolt. Verify timing in accordance with Para. 13-9, E, (2).

(m) Check security of alternator if new and remove fan to install spacer. If transferring alternator, inspect for cracks, check brushes and bearings, and reinstall.

(n) Check starter for security, condition of electrical connections and brushes, and lubricate Bendix assembly. Check for proper ring gear clearance to Bendix.

(o) Install CHT probes in cylinders.

(p) Install lifting ring, attach at third top engine case bolt from the accessory end.

UNCONTROLLED COPY WHEN DOWNLOADED OR PRINTED

Visit www.enstromhelicopter.com for instructions to order an original manual and to register for email notification of updates.

E. Engine – Installation

(1) Place engine in position under the pylon and attach lifting device.

(2) Raise engine into pylon, tilting as necessary to ensure accessories are not damaged.

(3) Install serviceable mounts and bolts with one to three AN960-716 washers under the nuts.

CAUTION: CHECK NUMBER OF WASHERS REQUIRED ON EACH INSTALLATION SO NUT WILL NOT BOTTOM OUT AT TORQUING.

(4) Torque upper engine mount bolts to 460-500 in-lb (52.0-56.5 Nm) before releasing the weight of the engine.

(5) Install cotter pins on top bolts.

(6) Disconnect and remove lifting device.

(7) Torque lower engine mount bolts to 460-500 in-lb (52.0-56.5 Nm) and install cotter pins.

(8) Remove lifting ring.

(9) Install baffling around sides of engine. (Leave all attaching hardware loose until all the baffling and the fan shroud are all in place.)

(10) Install ignition wires to engine through baffling.

(11) Install static air manifolds on baffling.

(12) Connect static air lines to nozzles.

(13) Install oil filler tube.

(14) Loosely install fan shroud and mount brackets.

(15) Temporarily install top engine baffle cover.

(16) Install T-0204 on starter ring rear support. Attach with two #8 bolts and washers on the support where there are no crankshaft bushings.

NOTE: Fan tape must be removed from the fan shroud to install T-0204.

(17) Snug bolts or temporarily install fan to align shroud.

NOTE: If T-0204 is not available, use small wood wedges, or similar shims around the fan to maintain equal clearance between the edges of the fan blades and the inside of the shroud.

(18) Secure fan shroud, baffling, and brackets, ensuring the shroud stays centered during the process. Torque all hardware connecting side baffles and supports.

(19) Remove tool T-0204.

(20) Install new fan tape.

UNCONTROLLED COPY WHEN DOWNLOADED OR PRINTED

Visit www.enstromhelicopter.com for instructions to order an original manual and to register for email notification of updates.



Left Side



Right Side

Figure 13-2. Engine Compartment Views

UNCONTROLLED COPY WHEN DOWNLOADED OR PRINTED

Visit www.enstromhelicopter.com for instructions to order an original manual and to register for email notification of updates.

(21) Install fuel lines to engine driven fuel pump, oil lines to engine crankcase breather tube and fuel pump drain.

NOTE: Ensure the installed fuel lines are lagged. For reference, see SIL 0062.

(22) Install induction tube to engine sump. Do not torque at this time.

(23) Install sump drain valves, three places.

(24) Install bay tubes and fuel filter.

(25) Connect fuel lines to filter.

(26) Install induction air line from fuel pump to induction tube.

(27) Install primary oil cooler and ducting.

(28) Install oil lines to both oil coolers.

(29) Install induction air box, hoses, and fuel nozzle static air check valve.

(30) Install engine ground strap, starter wiring, and alternator wiring.

(31) Install injector and turbocharger mount brackets.

(32) Install injector, inlet adapter, and AMC assembly cooling shroud.

NOTE: Ensure that the cooling shroud of the automatic mixture control is not contacting the forward pylon tubes or the horizontal upper deck static line. If the cover contacts the pylon, it will cause a vibration that will be felt by the pilot. If the shroud is touching the airframe, insert a flat blade screwdriver between the shroud and the pylon to move the shroud. If the shroud contacts the static line or the clamp that secures the line to the pylon, the clamp on the pylon should be relocated so there is no interference.

(33) Connect fuel and air lines to injector.

(34) Install inlet adapter to injector and safety wire.

(35) Install turbocharger and connect induction tube, oil lines and controls. Do not torque until entire exhaust system is installed.

(36) Connect manifold pressure line.

(37) Install cylinder head, oil temperature, and oil pressure probes and connections.

NOTE: For CHT probe installation, refer to Para. 7-21, C, to install spacer (P/N 28-22096-11), if not currently installed.

(38) Install exhaust system and TIT temperature probes.

(39) Torque all fuel injector, turbocharger mounts, exhaust flange nuts, and exhaust clamps.

UNCONTROLLED COPY WHEN DOWNLOADED OR PRINTED

Visit www.enstromhelicopter.com for instructions to order an original manual and to register for email notification of updates.

(40) Connect flexible duct to heater muff, heater control and fan shroud.

(41) Connect fuel and pressure lines to the fuel flow divider.

(42) Install fire curtain and seal with fire barrier sealant CP 25WB+ (3M) or equivalent.

(43) Install fuel line to fuel shutoff valve and seal doubler around line to the fire curtain with fire barrier sealant CP 25WB+ (3M) or equivalent.

(44) Install top engine baffling.

(45) Install main rotor transmission (Para. 11-6, D).

(46) Install fan and jack strut assembly (Para. 13-8, B, (5)).

(47) Install baggage box (Para. 8-11, D).

(48) Install fuel tanks (Para. 13-10, B, (2)).

(49) Connect battery.

(50) Service engine according to HIO-360 Operators Manual.

(51) Run engine to check control operation, fuel pressure and for evidence of system leaks.

(52) Check belt track (Para. 11-5, B).

(53) Install all cowling.

F. Cylinder – Removal

NOTE: Engine is installed for the following procedure.

(1) Remove upper side cowling to gain access to cylinder.

(a) Removing #1 cylinder will require removing the jack strut assembly and fan.

1 Remove jack strut assembly in accordance with Para. 11-4, A.

2 Remove fan in accordance with Para. 13-8, B, (1).

(2) Remove engine baffling above affected cylinder.

(3) Disconnect fuel and airlines from nozzle.

(4) Remove any clamps attached to cylinder tubes.

(5) Remove static air manifold.

(6) Remove ignition wires as necessary and remove side baffling.

(7) Disconnect exhaust system.

UNCONTROLLED COPY WHEN DOWNLOADED OR PRINTED

Visit www.enstromhelicopter.com for instructions to order an original manual and to register for email notification of updates.

(8) Remove induction tube to cylinder.

(9) Disconnect oil return line from cylinder.

(10) Remove probes if there are any in the affected cylinder.

(11) Remove or relocate any other hoses or lines obstructing cylinder removal.

(12) Refer to Avco Lycoming HIO-360 Operators Manual for detailed procedure on cylinder removal, inspection, and assembly.

G. Cylinder – Installation

(1) Install cylinder per instructions in Avco Lycoming HIO-360 Operators Manual.

NOTE: Cylinder hold-down through studs must have the nuts torqued on both sides of the engine.

(2) Install any probes removed for disassembly.

NOTE: For EDM 700 CHT probe installation, refer to Para. 7-21, C, to install spacer (P/N 28-22096-11), if not currently installed.

(3) Connect oil return lines to the cylinder.

(4) Check condition of induction tube and install.

(5) Check exhaust system flanges and gaskets and install exhaust system.

NOTE: Exhaust system may require shimming (Para. 13-3, C.2).

(6) Install engine side baffling.

(7) Install ignition wires.

(8) Install static air manifold, safety wire screws in pairs.

(9) Install flow divider fuel line clamp.

(10) Install nozzle and connect fuel and static air lines.

(11) Service engine oil and fuel systems.

(12) Run engine to check for system leaks.

(13) Install remaining baffling and cowling.

UNCONTROLLED COPY WHEN DOWNLOADED OR PRINTED

Visit www.enstromhelicopter.com for instructions to order an original manual and to register for email notification of updates.

13-3 ENGINE EXHAUST SYSTEM

A. General Information

The exhaust system on the engine consists of two manifold/collectors which route exhaust gases through the heater-exchange manifold and out through the wastegate and/or turbocharger, depending on engine power requirements. Refer to Figure 13-3 and Figure 13-9.

NOTE: For F-28F models prior to S/N 746, 280F models prior to S/N 1519, and 280FX models prior to S/N 2012 that have not complied with SDB 0073, refer to the procedure in Para. 13-3, J, to replace a clamp installation with a retention pin installation.

B. Exhaust Manifold – Removal

NOTE: Cylinder #1 and cylinder #3 are on the left side of the engine (pilot's side). Cylinder #2 and cylinder 4# are on the right side of the engine (co-pilot's side).

NOTE: The tips of the EGT/TIT probes will expand inside the exhaust pipes due to exhaust heat. Removal of a probe from a hot exhaust pipe may cause damage to the probe. If a probe will not come out of the pipe, disconnect the probe electrical lead and leave the probe installed in the pipe.

(1) Disconnect TIT probe (1) from exhaust manifold.

(2) Disconnect EGT (11) probes at cylinders.

(3) Remove ducting from heater muff (2).

(4) Remove clamp (4, Figure 13-9) that connects exhaust collector to turbocharger.

NOTE: The clamp connecting the exhaust collector to the turbocharger is hinged and can be easily removed. The clamp securing the tail pipe to the turbo is not hinged and must be spread gently to slide if off of the tail pipe and turbo flanges. Be careful to only spread the clamp enough to slide if off of the flanges so that it will not be damaged by bending.

(5) Remove exhaust inlet gasket (2).

(6) Disconnect linkage (4, Figure 13-3) at wastegate.

(7) Loosen v-band coupling (1, Figure 13-9) connecting tail pipe (or muffler) to turbocharger. Spread clamp open to permit clamp to slip off flange and onto tail pipe.

CAUTION: THE CLAMP SECURING THE TAIL PIPE TO THE TURBO IS NOT HINGED. DO NOT SPREAD THE CLAMP ANY FARTHER THAN NECESSARY.

(8) Remove exhaust pipe gasket (2, Figure 13-9).

UNCONTROLLED COPY WHEN DOWNLOADED OR PRINTED

Visit www.enstromhelicopter.com for instructions to order an original manual and to register for email notification of updates.

(9) Remove safety wire and retention pin (8) and remove wastegate (6) (Figure 13-3).

(a) If a clamp (9) is present, replace clamp with a retention pin installation in accordance with Para. 13-3, J.

(10) Remove two clamshell clamps (10) that connect #1 and #4 risers to the collectors.

(11) Remove two nuts (7) and washers on exhaust flange on each cylinder.

(12) Lubricate (penetrating oil) sleeve joint where right side (#2) collector is inserted into left side collector (at the heater muff). Break it loose by pulling #2 collector off cylinder studs and rotating back and forth where inserted into the left side collector. This allows the exhaust system to be removed in two pieces.

(13) Remove right-side collector from the left-side collector.

NOTE: The left and right collectors can be removed from the helicopter in one piece if the #2 intake pipe is removed from the engine.

C. Exhaust Manifold – Inspection

Upon removal of the complete exhaust system, inspect for the following:

(1) Exhaust flange mounts for cracks.

(2) Distortion of exhaust mount flanges.

(3) Correct gaskets.

(4) Hardware condition.

(5) V-band couplings for cracks, splits, and broken weld joints.

(a) Refer to Para. 13-5, C for additional turbocharger inspection criteria.

(6) Protruding areas in exhaust (usually found at the base of the turbocharger bypass/wastegate) that resemble bubbles.

NOTE: These areas form due to aircraft operating with higher than acceptable EGT/TIT. If any areas such as these are found, the exhaust system must be overhauled or replaced prior to further operation.

(7) Heater exchange manifold for cracks.

WARNING: AT THE 100-HOUR INSPECTION, IT WILL BE NECESSARY TO REMOVE THE CABIN HEAT EXCHANGER COVER TO INSPECT FOR ANY CRACKS INTERNALLY WHICH COULD ALLOW CARBON MONOXIDE TO ENTER THE CABIN THROUGH THE HEATING SYSTEM.

UNCONTROLLED COPY WHEN DOWNLOADED OR PRINTED

Visit www.enstromhelicopter.com for instructions to order an original manual and to register for email notification of updates.

(8) Check for indication of exhaust leakage.

NOTE: The primary cause of exhaust leaks on the F series Enstrom helicopters is the fit of the right side (co-pilot) collector to the #2 and #4 cylinders. Often the #4 stack is too long preventing the #2 collector from sitting flat on the cylinder exhaust port.

(a) If evidence of leakage is present on the cylinder fin or on the spark plug, the leakage may be caused by the following:

1 The #4 stack is too long.

2 Warped flange on the exhaust pipe.

NOTE: Warped flanges are usually caused by over-torquing the retention nuts. This is because the center spiral-wound part of the gasket is thicker than the flange around the outside edge. Disassembly is required to determine the repair required (Para. 13-3, C.1).

C.1 Exhaust Manifold – Disassembly

NOTE: Disassembly is required to determine the repair required if a warped flange is evident or if #4 exhaust stack is too long.

(1) Loosen four exhaust nuts on left side of engine (pilot's side).

(2) Remove clamp on #4 stack and nuts holding #2 exhaust pipe to the cylinder.

(3) Lubricate the sleeve joint where the right side (#2) collector is inserted into the left side collector (at the heater muff) with penetrating oil and break it loose by pulling the #2 collector off of the cylinder studs and rotating back and forth where it is inserted into the left side collector.

(4) Disconnect EGT wire leads.

CAUTION: OFTEN THE TIPS OF THE EGT PROBES WILL SWELL AND PREVENT THE PROBE ASSEMBLY FROM BEING REMOVED FROM THE PIPE. IF THE PROBES WILL NOT COME OUT OF THE PIPE EASILY, THEN DO NOT REMOVE THEM AS THE PROBES WILL BE DAMAGED.

(5) Remove right-side collector from engine and heater muff assembly.

(6) Remove #2 stack from the cylinder.

(7) Check collector assembly for stack lengths (Figure 13-3A, (a)).

(a) Place the collector assembly and the #4 riser on a flat surface with the #4 riser inserted into the collector assy. Both flanges should sit flat on the surface.

(b) If there is a gap under the inside edge of the #2 stack it is an indication that the #4 stack is too long and the collector assembly will need to be shimmed when installed on the helicopter.

(c) If required, refer to Para. 13-3, C.2 for shimming the exhaust stacks.

UNCONTROLLED COPY WHEN DOWNLOADED OR PRINTED

Visit www.enstromhelicopter.com for instructions to order an original manual and to register for email notification of updates.

(8) Check exhaust pipe flanges for straightness (Figure 13-3A, (b)) and repair, if required.

(a) Place the flange on a flat surface such as the anvil surface of a vise.

(b) If a .001" feeler gauge can be inserted between the flange and the flat surface, the flange is warped (Figure 13-3A, (c)).

(c) A large punch and hammer can sometimes be used to straighten the flange by tapping it against the flat surface of the vise (Figure 13-3A, (d)). The stainless steel is quite soft and can normally be re-shaped to repair warped flange.

C.2 Exhaust Manifold – Shimming

NOTE: There are TWO styles of exhaust gaskets approved by Lycoming for turbocharged engines (Reference Lycoming SI-1204, latest revision). The blow-proof gasket is P/N 77611 and P/N LW-16567 is a thin stainless gasket that is intended to be a nested double gasket (12, Figure 3-3).

NOTE: Blow-proof gaskets may be reused but must be replaced at overhaul.

CAUTION: COPPER GASKETS MUST NEVER BE USED ON A TURBOCHARGED ENGINE DUE TO THE HIGHER EGTS.

(1) Install short stack (#1 or #4 cylinder) on engine and loosely torque nuts (7, Figure 3-3).

(2) Use a .001 feeler gauge to check for a gap under gasket or the exhaust flange on both sides of stack (Figure 13-3A, (e)).

(a) If the feeler gauge can be inserted into a gap on either side of the gasket, the collector will require shimming.

NOTE: The most common shimming is required because the #4 stack is frequently too long causing a gap on the inside (against the cylinder fin) on #2 cylinder.

(2) Install one P/N 77611 gasket and one P/N LW-16567 gasket on the #2 cylinder and two P/N LW-16567 gaskets under the flange on the #4 cylinder.

NOTE: P/N LW-16567 gasket is installed adjacent to the stack.

(a) Verify if gaskets are sealing at both exhaust flanges.

(b) The configuration of the gaskets can be adjusted between the two cylinders to compensate for individual differences between the cylinders.

UNCONTROLLED COPY WHEN DOWNLOADED OR PRINTED

Visit www.enstromhelicopter.com for instructions to order an original manual and to register for email notification of updates.

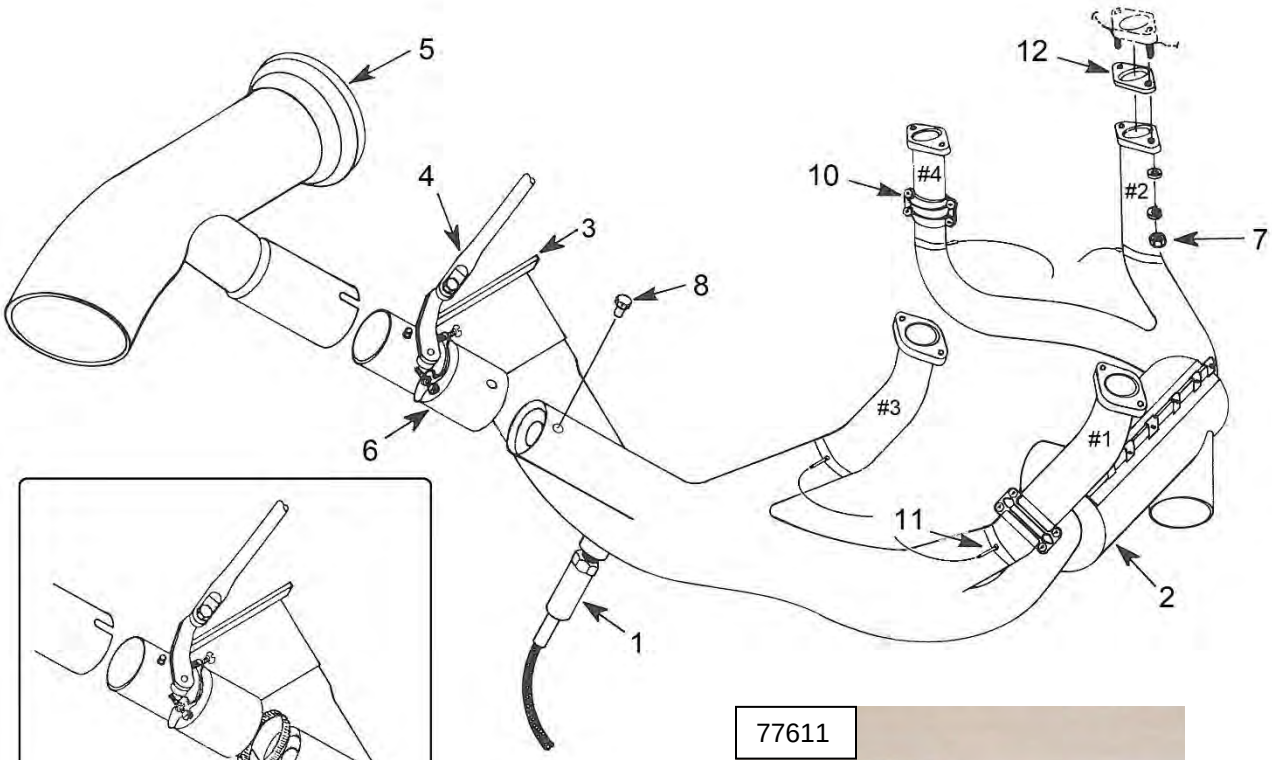

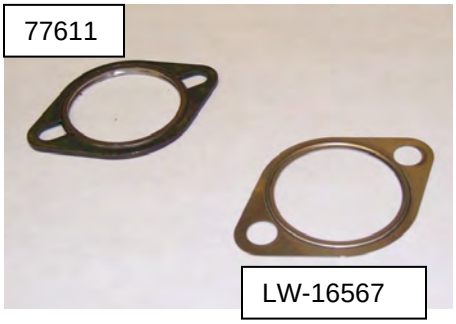

1. TIT probe
2. Heater exchange manifold
3. Exhaust to turbo collector clamp location
4. Wastegate Linkage
5. Tailpipe to turbo location
6. Wastegate
7. Nut
8. Retention Pin
9. Clamp (Obsolete) (Replaced by Retention Pin (8)
10. Clamp
11. EGT probe
12. Gasket (77611 or LW-16567)

Figure 13-3. Engine Exhaust System and Wastegate

UNCONTROLLED COPY WHEN DOWNLOADED OR PRINTED

Visit www.enstromhelicopter.com for instructions to order an original manual and to register for email notification of updates.



a) Stack Length Check



b) Flange Warp Check



c) .001” Feeler Gauge Inserted



d) Flange Repair



e) Feeler Gauge Check

Figure 13-3A

UNCONTROLLED COPY WHEN DOWNLOADED OR PRINTED

Visit www.enstromhelicopter.com for instructions to order an original manual and to register for email notification of updates.

D. Exhaust Manifold – Installation

NOTE: If the engine has been run for many hours with exhaust leaks, the surface of the cylinder will be eroded, and the gaskets will not seal. Often the cylinder flange can be repaired on the helicopter. Contact customer support for instructions on how to perform this repair.

NOTE: Gasket sealer (Flo-Ex brand) applied between the interface of the manifold flange, gasket, engine cylinder head provides additional sealing for the exhaust manifold installation.

(1) Assemble the cover on the cabin heat exchanger (2, Figure 13-3).

(2) Install the #1 riser on the cylinder with gasket and hardware but leave the nuts loose by several threads.

(3) Install the left-side (pilot-side) manifold section with new gaskets (12) and hardware. Leave the nuts (7) loose by several threads.

(4) Apply a generous amount of anti-seize (Nickel Grade or Silver Grade, MIL-PRF-907) to the interior of the heat exchanger where the right-side collector will be inserted.

(5) Install #4 exhaust pipe riser with gaskets and hardware onto cylinder. DO NOT TORQUE.

(6) Install right-side manifold section into left side collector and connect to #2 cylinder with new gaskets (12) and hardware. DO NOT TORQUE.

(7) Connect exhaust inlet (manifold) to turbocharger inlet with v-band coupling (4, Figure 13-9).

(a) If the collar (5) can be removed, coat the inside of the collar with anti-seize (Nickel Grade or Silver Grade, MIL-PRF-907) and slide the collar up and rotate for proper alignment.

(b) Refer to Para. 13-5, D, (13), (a) through step 5 for partially installing the v-band coupling (4).

NOTE: Do not fully torque v-band coupling (4) at this time.

(8) Install wastegate assembly (6, Figure 13-3).

(9) Connect turbocharger exhaust outlet and exhaust tailpipe with v-band coupling (1, Figure 13-9).

(a) Refer to Para. 13-5, D, (13), (b) to complete the v-band coupling installation.

(10) Complete the v-band coupling (4) installation.

(a) Refer to Para. 13-5, D, (13), (a), step 6 through 11.

(11) Check all attachment points for alignment.

UNCONTROLLED COPY WHEN DOWNLOADED OR PRINTED

Visit www.enstromhelicopter.com for instructions to order an original manual and to register for email notification of updates.

(12) Torque manifold nuts (7, Figure 13-3) (80-90 in-lb/9.0-10.2 Nm).

(13) Use a .001" feeler gauge to measure the gap between the #2 exhaust pipe flange and the cylinder exhaust port, especially around the back side of the exhaust port (Figure 13-3A, (e)).

(14) Install the clamshell clamps (10, Figure 13-3) on #1 and #4 stacks and torque (25 in-lb/2.8 Nm).

(15) Install or connect the TIT probe (1).

(16) Install or connect the EGT probes (11).

(17) Install heater muff ducting.

(18) Connect wastegate linkage (4).

(19) Check wastegate system for security, rigging, freedom of movement and proper operation (Para. 13-3, E and F).

(20) Run engine and check for possible exhaust leaks.

(21) Retorque the exhaust flange nuts (7) and all other exhaust installations after the engine has cooled. Re-safety (MS20995C32) as required.

CAUTION: DO NOT INSTALL A COPPER EXHAUST GASKET ON A TURBOCHARGED ENGINE.

E. Wastegate – Operational Check

NOTE: This check is done with the engine shut down.

(1) Check freedom of operation of injector to wastegate rod "breakaway" function by holding the wastegate arm stationary, partially opened, and rotating the throttle in both directions causing rod to break away and move approximately two inches in each direction.

(2) Ensure breakaway mechanism is engaged after completion of operational check.

F. Wastegate – Rigging

NOTE: Ensure throttle arm is properly rigged to the injector.

CAUTION: MISRIGGING CAN POTENTIALLY RESTRICT THE ABILITY OF THE ENGINE TO REACH FULL ENGINE POWER.

(1) Set injector to full throttle position.

(2) Check wastegate butterfly to ensure it is fully closed.

(3) Adjust butterfly position by adjusting the inboard rod end.

(4) Adjust wastegate closed stop to provide a .015-.020 inch gap between stop and arm.

UNCONTROLLED COPY WHEN DOWNLOADED OR PRINTED

Visit www.enstromhelicopter.com for instructions to order an original manual and to register for email notification of updates.

(5) Lock closed stop with jam nut.

(6) Set injector to position throttle arm on the idle stop.

(7) Check wastegate butterfly to ensure it is open past center.

(8) Adjust wastegate open stop to provide a .015-.020 inch gap between stop and arm.

(9) Lock stop with jam nut.

G. Wastegate – Removal

(1) Disconnect wastegate linkage

(2) Loosen the v-band coupling (1, Figure 13-9) connecting the tail pipe (or muffler) to the turbocharger and being careful not to spread it apart any farther than is necessary, slide it of off the flange and onto the tail pipe.

(3) Remove exhaust pipe/muffler and gasket (2).

(4) Remove wastegate assembly (6, Figure 13-3).

H. Wastegate – Inspection

(1) Check wastegate for internal heat erosion of the butterfly valve and shaft, freedom of movement, excessive clearance, cracks, and distortion.

I. Wastegate – Installation

NOTE: Use anti-seize (Nickel Grade or Silver Grade, MIL-PRF-907) on all slip joints

NOTE: If a new wastegate is installed, modify the wastegate in accordance with Para. 13-3, K, before proceeding.

(1) Place wastegate in position on exhaust manifold.

(2) Install retention pin (8) and safety (MS20995C32).

(3) Install exhaust outlet to the wastegate (6, Figure 13-3).

(4) Install exhaust outlet, gasket (2), and v-band coupling (1) to the turbocharger (Figure 13-9).

(a) Refer to Para. 13-5, D, (13), (b) to complete the v-band coupling (1) installation.

(6) Connect wastegate actuating rod.

(7) Check assembly for security of attachment and freedom of movement.

UNCONTROLLED COPY WHEN DOWNLOADED OR PRINTED

Visit www.enstromhelicopter.com for instructions to order an original manual and to register for email notification of updates.

J. Wastegate – Clamp Replacement

NOTE: For F-28F models prior to S/N 746, 280F models prior to S/N 1519, and 280FX models prior to S/N 2012 that have not complied with SDB 0073, refer to the following procedure to replace a clamp (9, Figure 13-3) installation with a retention pin (8, Figure 13-3) installation. Refer to Figure 13-3B for the following procedure.

(1) First determine that the wastegate assembly is properly positioned and rigged correctly (Para. 13-3, E through I).

(2) After readjustment or determination that the wastegate position and rigging are correct, its position relative to the exhaust stack stub must be marked for repositioning after drilling and reassembly.

(a) Draw a line radially along the lower edge of the wastegate tube to establish its position relative to the exhaust stack stub (Detail i, Line A).

(b) Use the steel scale to draw a centerline parallel to the tube sides on the exhaust stub overlapping the wastegate tube by at least 1 inch and extending at least 2 inches on the stub tube (Detail i, Line B).

(3) Remove stack and slide wastegate upward and off the exhaust stack stub (by-pass tube).

(4) Discard lower seal clamp (9).

(5) Measure exactly 2.50 inches from the end of the by-pass tube toward the exhaust stack and mark (Detail ii, Point C).

NOTE: Prior to reassembly, inspect the wastegate in accordance with Para. 13-3, H.

(6) Reassemble exhaust stack and wastegate, reposition wastegate to original location by matching index lines (Detail ii, Lines A and B) and recheck rigging.

(7) Position, mark, and install retention pin (8, Figure 13-3).

(a) Measure exactly 2.00 inches from Point C and mark Point D (Detail i).

(b) Center punch Point D and drill a 0.196 inch diameter hole to a depth of 0.38 inch. Deburr hole.

(c) Install stainless steel (retention) pin (8) (P/N 28-12574-11).

(d) Safety (MS20995C32) (MS9226-05) retention pin (8) in position: Thread wire through head and double wrap around wastegate and twist ends together (Detail iii).

(8) Check exhaust wastegate system for security, rigging, freedom of movement and proper operation (Para. 13-3, E and F).

K. Wastegate – Wastegate Replacement

(1) Before removal of an old wastegate assembly, transfer the existing position of the retention pin hole for relocating on the new replacement. Refer to the preceding steps (Para. 13-3, J).

UNCONTROLLED COPY WHEN DOWNLOADED OR PRINTED

Visit www.enstromhelicopter.com for instructions to order an original manual and to register for email notification of updates.

INTENTIONALLY LEFT BLANK

UNCONTROLLED COPY WHEN DOWNLOADED OR PRINTED

Visit www.enstromhelicopter.com for instructions to order an original manual and to register for email notification of updates.

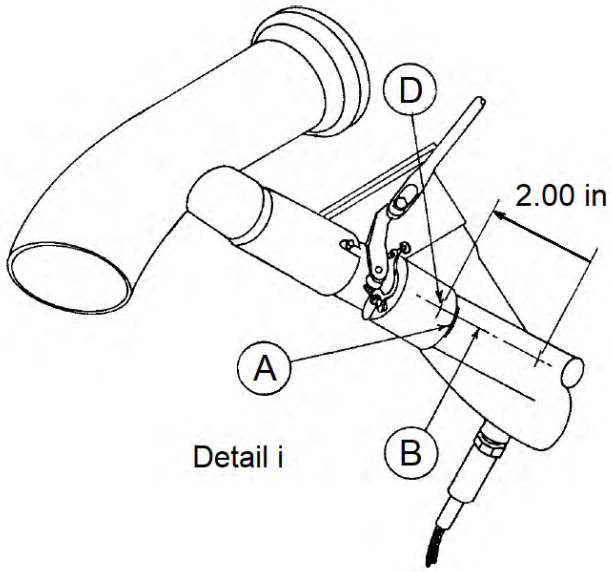

Detail i

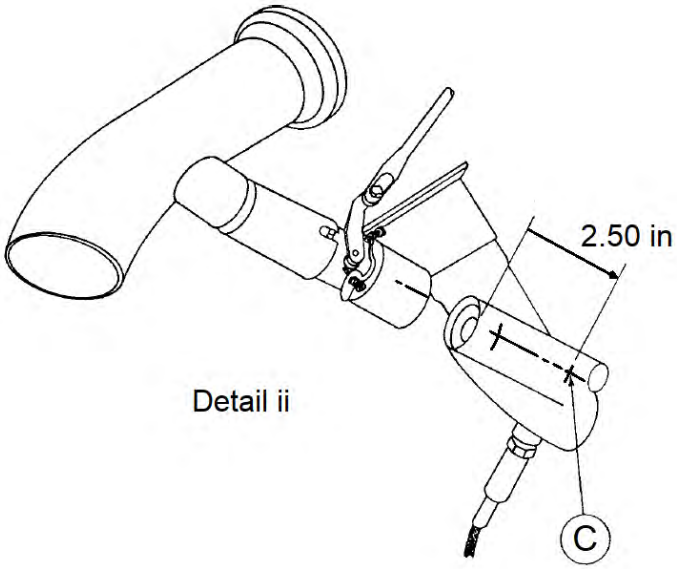

Detail ii



Detail iii

Figure 13-3B. Wastegate Retention Pin Installation

UNCONTROLLED COPY WHEN DOWNLOADED OR PRINTED

Visit www.enstromhelicopter.com for instructions to order an original manual and to register for email notification of updates.

13-4 FUEL INJECTION SYSTEM

A. General Information

All RSA type fuel injection systems are based on the principle of measuring engine air consumption by use of a Venturi tube and using the airflow forces to control fuel flow to the engine. Fuel distribution to the individual cylinders is obtained via a fuel flow divider and fuel injection nozzles.

It is suggested that all adjustments to the RSA-5 fuel injection system be performed with the use of the Operation and Service Manual, Form 15-338 (latest revision), published by the Bendix Corporation (Precision Airmotive).

B. Fuel Injector System - Troubleshooting

NOTE: Internal field maintenance of RSA type injector is limited to lapping the main metering jet and rotating plates and replacing the O-ring.

Repairs to and calibration of the regulator section must be done by an authorized Bendix Service Center or Overhaul Facility, for the specific parts list number indicated on the servo data plate.

UNCONTROLLED COPY WHEN DOWNLOADED OR PRINTED

Visit www.enstromhelicopter.com for instructions to order an original manual and to register for email notification of updates.

Problem	Possible Cause	Action
Hard starting accompanied by the discharge of black puffs of smoke and popping from exhaust stack while cranking and possible fuel leakage from the engine sump drains.	Flooding because of excessive prime with boost pressure or improper mixture setting.	Clear engine by cranking with throttle in the wide open position, ignition switch off, boost pump off, and mixture in idle cut-off position.
	Flooding because of fuel servo leaky mixture control plate, usually indicated previously by failure to have a crisp shut-off when mixture control was placed at idle cut-off position.	See Para. 13-4, D, (2), (c)
	Flooding because of center body seal leak in servo.	See Para. 13-4, D, (2), (b)
Hard starting accompanied by possible backfiring and fuel leakage from induction tube sump drain.	Insufficient fuel prime, improper mixture control setting, no boost pressure or obstructed fuel flow.	Reference normal engine starting procedures (Para. 13-4, E, (1)).
	Insufficient fuel to fuel nozzles because ambient air check valve on air filter box stuck, resulting in fuel being drawn into induction sump tube and seeping from drain.	Clean fuel static air vent valve (Para. 13-2, D, (2), (i)).
Rough idle.	Mixture too rich or too lean.	Confirm with mixture control. A too rich mixture will be corrected and roughness decreased during lean-out while a too lean mixture will be aggravated and roughness increased. Adjust idle to give a 25-50 rpm rise at 1400-1500 rpm.
	Fuel vaporizing in fuel line or distributor. Encountered only under high ambient temperature conditions or following prolonged operation at low idle rpm.	Increase engine rpm, turn into the wind or terminate ground operation (Para. 13-4, C).
	Plugged nozzle(s), usually accompanied by high takeoff fuel flow readings and slightly higher MAP'S.	Clean nozzles.

UNCONTROLLED COPY WHEN DOWNLOADED OR PRINTED

Visit www.enstromhelicopter.com for instructions to order an original manual and to register for email notification of updates.

Problem	Possible Cause	Action
Rough idle. (Continued)	Slight air leak into induction system through manifold drain check valve. Usually able to adjust initial idle, but rough in 1000-1500 rpm range, and will have a slightly higher MAP.	Confirm by temporarily plugging sump drain lines. Replace or clean check valves as necessary.
	Internal leak in injector (usually unable to lean out idle range).	Replace injector.
	NOTE: If engine does not stop crisply at mixture idle cut-off position, check Para. 13-4, D, (2), (b) and (c), Para. 13-4, D, (8), (a), 9.	
Low takeoff fuel flow.	Fuel filter or finger screen partially plugged.	Remove and clean in a suitable solvent.
	Injector out of adjustment.	Replace injector with properly calibrated unit.
	Faulty gauge.	Replace as necessary.
	Low fuel pressure.	Readjust to correct setting.
Poor cut-off.	Improper rigging of mixture control.	Adjust.
	Mixture control valve scored or not seating properly.	Eliminate cause of scoring (usually a burr or dirt) and lap mixture control valve and plug on surface plate.
	Boost on.	Turn off.
Rough engine and poor cut-off.	Fuel injection nozzle air bleed hole(s) clogged.	Clean or replace nozzles.
Erroneous fuel flow.	Faulty gauge.	Replace as necessary.
	AMC blast tube disconnected.	Repair as necessary.
Abnormal engine operation – combination of cold start engine stalling, high TIT, rough of high engine idle.	Air leakage at adapter due to loose attachment screws, deteriorated gasket, and possible ingestion of adapter gasket.	Check condition of gasket and security of screws.
		Replace gasket, if necessary.

UNCONTROLLED COPY WHEN DOWNLOADED OR PRINTED

Visit www.enstromhelicopter.com for instructions to order an original manual and to register for email notification of updates.

Typical Fuel Flow Performance For “F” Models

3050 rpm
Sea Density Altitude

Manifold Pressure Inches	Horsepower	Percent of Horsepower	Fuel Flow (PPH)		Endurance (Hours)	
			Lean	Rich	Lean	Rich
20”	120	53%	62	76	3.8	3.1
22”	130	58%	68	82	3.4	2.8
24”	142	63%	74	89	3.2	2.6
26”	153	68%	80	97	2.9	2.4
28”	165	73%	87	107	2.7	2.2
30”	176	78%	NA	119	NA	2.0
32”	186	83%	NA	131	NA	1.8
34”	198	88%	NA	142	NA	1.6
36”	208	92%	NA	153	NA	1.5
38”	220	98%	NA	163	NA	1.4
39”	225	100%	NA	168	NA	1.4

NOTE: This performance is typical for Enstrom "F" models. There will be some variation between individual helicopters.

NOTE: “LEAN” limits denote TIT at 1650 degrees Fahrenheit.

NOTE: “NA” denotes not approved mixture setting.

C. General Operating Information

Several phases of ground operation are adversely affected by fuel vaporization in the lines. Fuel vaporization is experienced under extreme conditions of ambient and/or nacelle temperatures. Starting idle operating and engine shutdown procedures must all be modified to obtain optimum results under these conditions.

(1) Starting

In cold weather the engine compartment (nacelle) temperature drops off rapidly following engine shutdown and the nozzle lines remain nearly full of fuel. Cold weather starting procedures are therefore simple with highly predictable results. However, in extremely hot weather, nacelle temperatures increase rapidly following engine shutdown and fuel in the lines vaporizes and escapes out into the manifold. Hot weather starting procedures therefore depend on how soon the next start is attempted. Within the first 20-30 minutes wait; the vaporized fuel in the manifold will have nearly disappeared and some slight "priming" could be required to refill the nozzle lines and keep the engine running after first firing.

UNCONTROLLED COPY WHEN DOWNLOADED OR PRINTED

Visit www.enstromhelicopter.com for instructions to order an original manual and to register for email notification of updates.

(2) Idling

During ground operation every precaution should be taken to keep nacelle temperatures from increasing to the extent that fuel will vaporize in the fuel lines. The following suggestions are aimed at minimizing this problem.

(a) Keep nacelle temperatures as low as possible by:

1 Avoiding excessive ground operation.

2 Keeping cooling airflow up by keeping engine rpm's as high as possible.

3 Upon restarting of a hot engine, operate engine at 1200-1500 rpm for several minutes to reduce the residual heat in the engine compartment.

(b) Keep fuel temperatures as low as possible. Higher rpm's with the accompanying higher line pressure and flow will help to dissipate some of the heat within the lines.

(c) Make an idle speed and mixture adjustment that is a compromise between the engine's requirement during the cool of the morning and the heat of the day. The higher than normal temperature encountered during the heat of the day results in the engine requiring a considerably leaner idle mixture. However, with fuel injection, this richer setting at the heat of the day will help dissipate more engine heat.

(3) Shutdown (Cut-Off)

The idling procedure practiced just prior to engine shutdown has considerable bearing on the "cleanliness" or smoothness with which the engine stops. If the idling procedures suggested above are not followed and fuel is vaporizing in the lines, the engine will continue to idle very rough for several seconds. This, despite a 100% cut-off of fuel supply by the mixture control.

D. Injector (Fuel Servo)

(1) General

Since the air differential pressure is a function of the airflow, and the fuel differential pressure is a function of the fuel flow, the correct fuel-to-air ratio is always maintained with this system regardless of the quantity of air being consumed by the engine.

Provisions have been made to compensate for the low air forces experienced in the idle range by the incorporation of the constant head idle spring. This spring provides a constant fuel differential pressure that will allow adequate fuel supply for the idle range. As the air forces increase, the spring compresses until the spring retainer touches the air diaphragm and acts as a solid member.

UNCONTROLLED COPY WHEN DOWNLOADED OR PRINTED

Visit www.enstromhelicopter.com for instructions to order an original manual and to register for email notification of updates.

NOTE: The Bendix Model RSA5AB1 fuel injector which is supplied with the HIO-360-F1AD Lycoming engine is internally adjusted specifically for the Enstrom turbocharged installation. ALL replacement injectors must be acquired from your nearest Lycoming or Bendix distributor by parts list number.

(2) Operational Checks

(a) Idle Mixture and rpm Check

1 Operate helicopter to normal temperature and pressure ranges.

2 Verify magneto operation.

NOTE: Maximum engine drop 125 rpm and rise of 100°F.

3 Perform normal cool down.

a 1 minute at 2000 engine rpm

b 2 minutes with throttle off and clutch disengaged

4 Verify idle is 1450-1500 rpm.

NOTE: If required, perform any adjustment to the idle stop with the engine off.

5 Boost pump – remain ON.

6 Slowly lean the engine, observing rpm change.

NOTE: Move mixture to full rich before engine quits.

- If rpm rise during leaning – idle mixture is rich.
- If immediate rpm drop – idle mixture is lean.

7 Engage clutch.

a Accelerate engine to 2500 rpm.

b If engine will not accelerate smoothly from idle, idle mixture is too lean.

8 Perform idle mixture and rpm adjustment (Para. 13-4, D, (8)), if necessary.

(b) Center Body Seal Leakage Check

1 Remove intake flex hose from injector inlet.

2 Disconnect injector fuel outlet line.

3 Cap injector fuel outlet fitting

4 Magneto Switch – Off

5 Throttle – Full On

6 Mixture – Full Rich

UNCONTROLLED COPY WHEN DOWNLOADED OR PRINTED

Visit www.enstromhelicopter.com for instructions to order an original manual and to register for email notification of updates.

7 Master Switch – On

8 Boost Pump – On

9 Observe injector impact tubes for fuel leakage.

NOTE: Leakage indicates a damaged center body seal. This repair is done ONLY by an authorized Bendix Service Center or Overhaul Facility.

10 Replace injector if necessary.

(c) Mixture Control Plates Leakage Check

1 Magneto Switch – Off

2 Disconnect injector fuel outlet line from injector.

3 Mixture Control – Full Lean

4 Throttle – All the way out (Off)

5 Master Switch – On

6 Boost Pump – On

7 Observe open fitting for evidence of fuel leakage.

NOTE: Fuel leakage indicates scored (a) mixture control jet, (b) rotating plates or a damaged O-ring on the jet.

8 Lap plates as necessary (Para. 13-4, D, (9)).

(3) Normal Operating Characteristics

(a) Mixture full rich, engine at 3050 rpm.

1 29" MAP fuel flow - 110/120 lb/hr.

2 39" MAP fuel flow - 150/155 lb/hr.

(b) Cold or hot engine may not idle with boost pump off.

(c) At normal operating temperature engine should idle with boost pump on or off.

(d) Engine idle rpm will not decrease, boost off to boost on.

(e) When throttle is rapidly reduced to idle (chopped) from 3050 rpm, engine idle will not drop below normal idle setting.

(4) Rigging Throttle and Wastegate Actuating Arm to Injector

(a) Position centerline of throttle arm two serrations (approximately 30°) counter clockwise from an imaginary line drawn between the throttle shaft end and the center of the idle valve arm pivot point.

UNCONTROLLED COPY WHEN DOWNLOADED OR PRINTED

Visit www.enstromhelicopter.com for instructions to order an original manual and to register for email notification of updates.

(5) Injector - Removal

NOTE: Injector removal, through the firewall access, can be accomplished without removing the turbocharger or the turbocharger can be removed (Para. 13-5, B) to improve accessibility.

(a) Disconnect hose (1, Figure 13-5) from blast tube assembly.

(b) Disconnect mixture control cable (2).

(c) Disconnect fuel inlet (3) and outlet lines (4).

(d) Disconnect throttle (5) and wastegate (6) controls.

(e) Remove four attachment bolts (7).

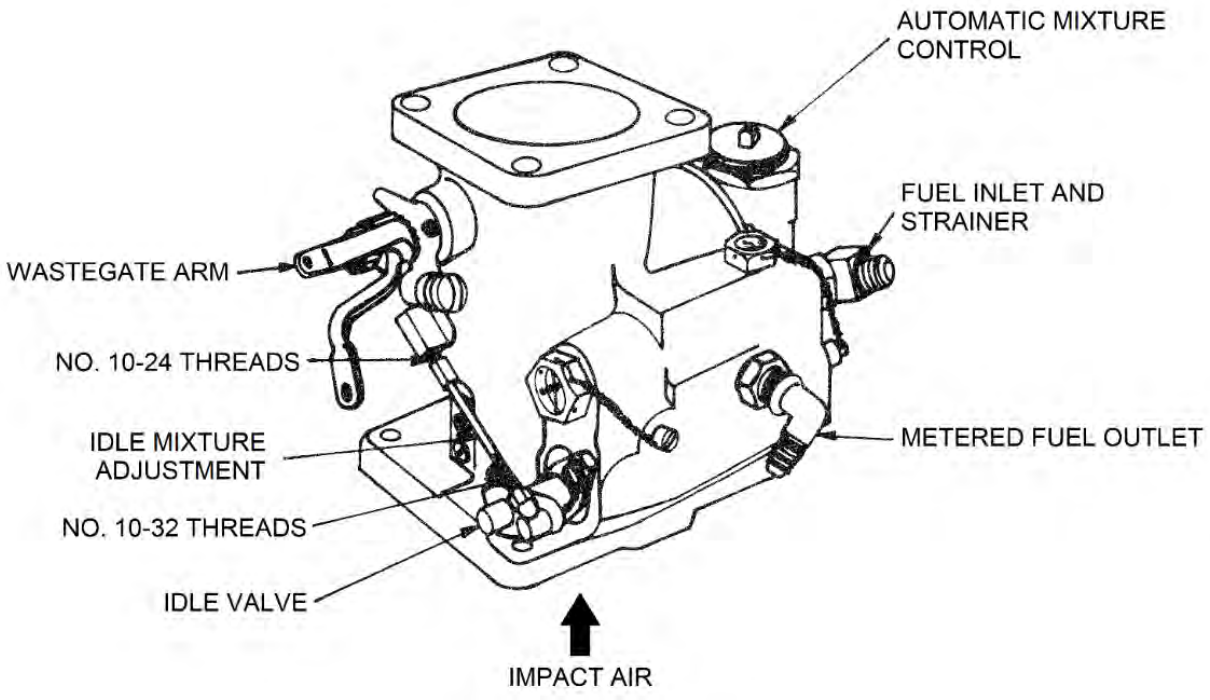

Figure 13-4. Fuel Injector (Servo)

UNCONTROLLED COPY WHEN DOWNLOADED OR PRINTED

Visit www.enstromhelicopter.com for instructions to order an original manual and to register for email notification of updates.

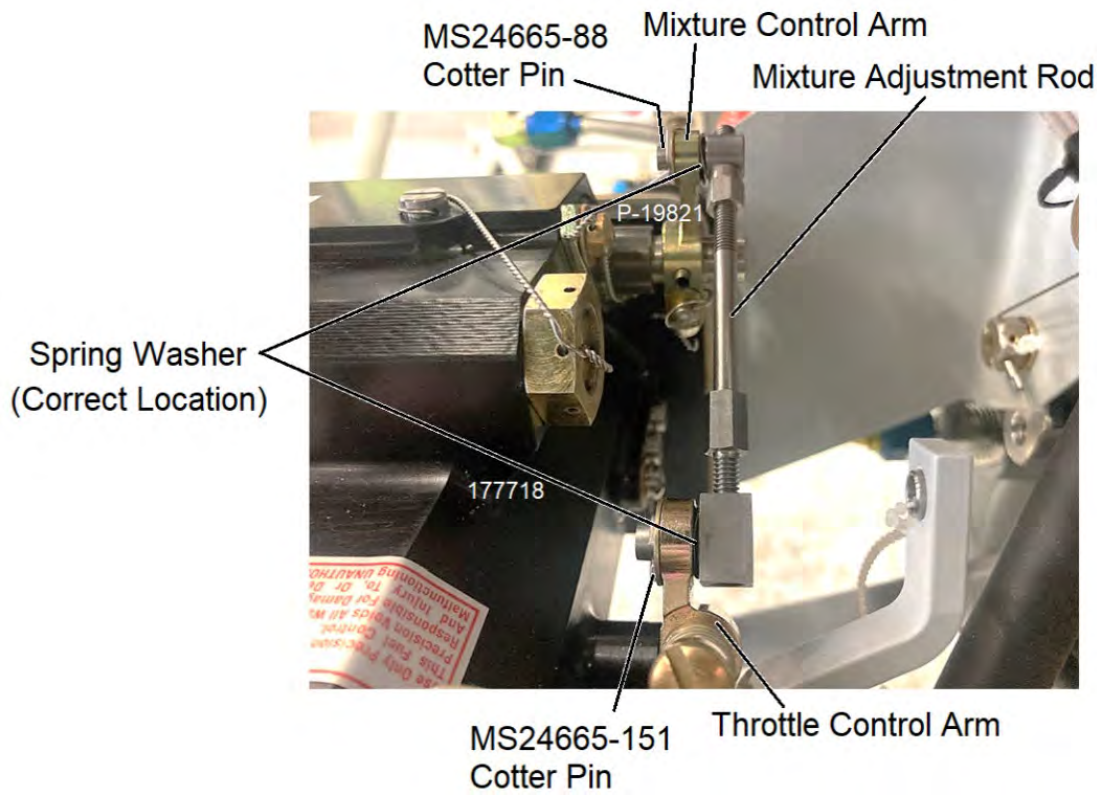

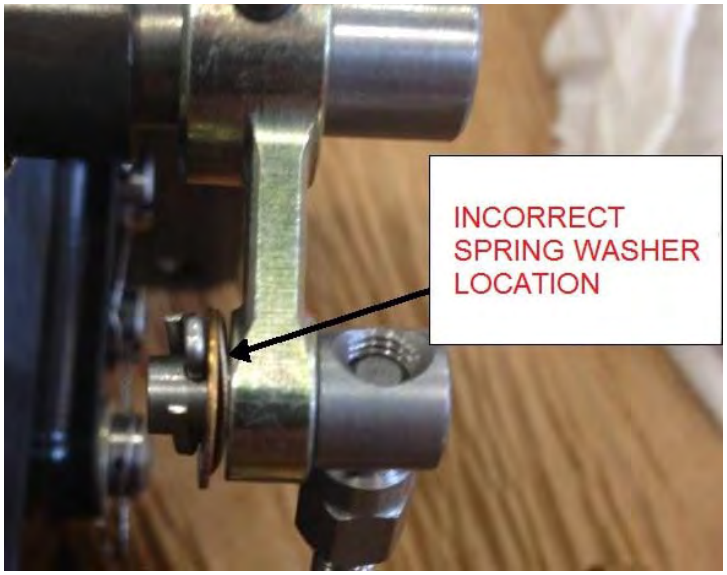

Figure 13-4.1. Mixture Adjustment Rod Installation

Visit www.enstromhelicopter.com for instructions to order an original manual and to register for email notification of updates.

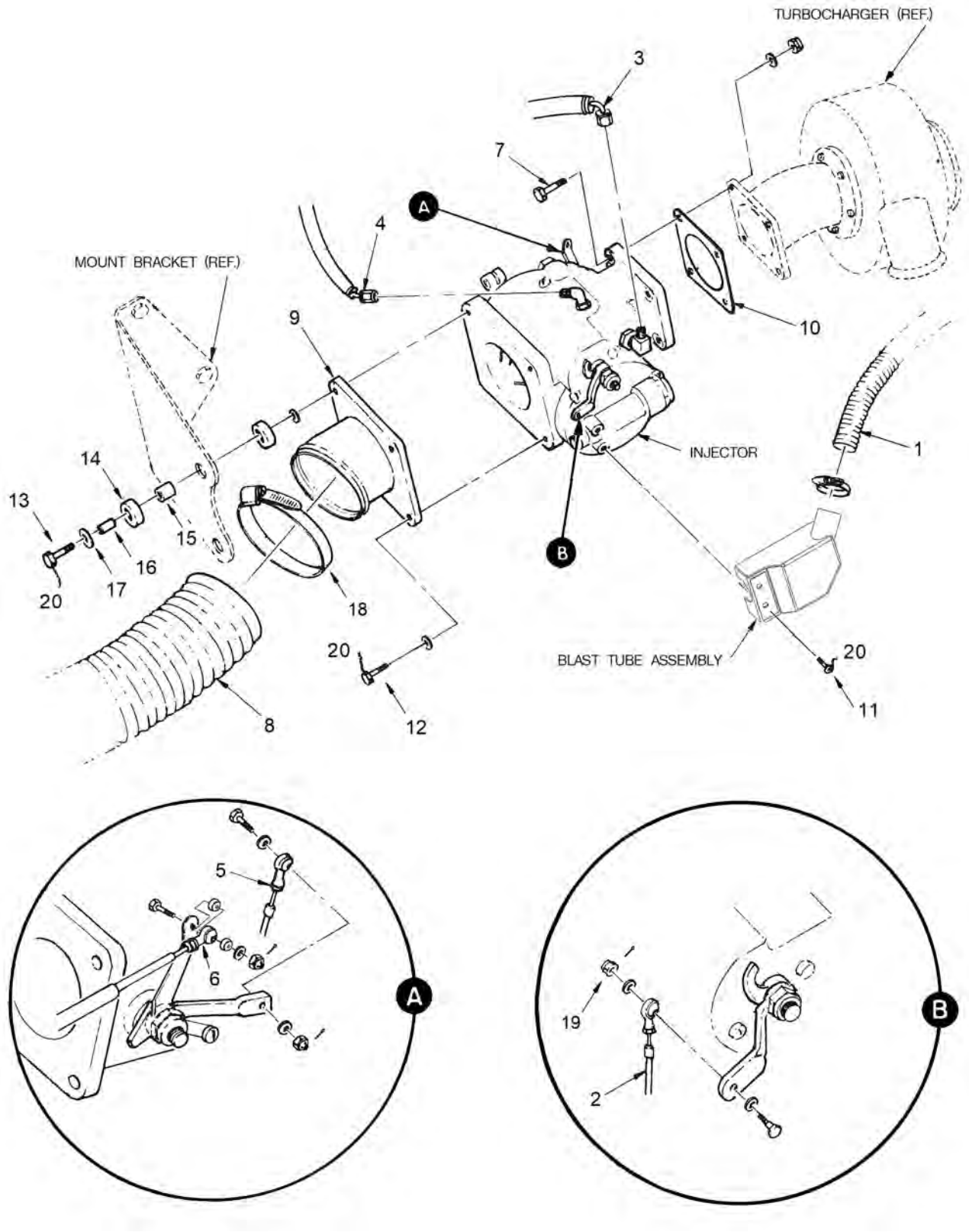

Figure 13-5. Fuel Servo Installation

UNCONTROLLED COPY WHEN DOWNLOADED OR PRINTED

Visit www.enstromhelicopter.com for instructions to order an original manual and to register for email notification of updates.

Figure 13-5 Fuel Servo Installation Legend

1.	Blast Tube Hose	8.	Air Inlet Hose	15.	Shock Mount (small)
2.	Mixture Control Cable	9.	Air Inlet Adapter	16.	Metal Spacer
3.	Fuel Inlet Line	10.	Gasket	17.	1/4” Harper Washer
4.	Fuel Outlet Line	11.	Screw	18.	Clamp
5.	Throttle Control	12.	Bolt	19.	Nut
6.	Wastegate Control	13.	Bolt	20.	Safety Wire
7.	Bolt	14.	Shock Mount (large)		(MS20995C32)

(f) Disconnect air inlet hose (8) from injector adapter.

(g) Disconnect injector and air inlet adapter (9) by removing two mounting bracket connecting bolts (13) and two forward bolts (12).

(h) Remove the injector, inlet adapter and outlet gasket (10).

(6) Injector – Inspection

(a) Check air inlet hose and blast tube hose (1, Figure 13-5) for evidence of wear that could cause leakage.

(b) Check condition of gasket (10) between injector adapter and turbocharger.

(c) Check security of bolts (7).

(d) Inspect for proper location of spring washers (Figure 13-4.1).

(7) Injector - Installation

NOTE: On new injectors and those that have had throttle arm removed, it will be necessary to check rigging of the throttle arm to injector by checking operation of the waste gate. (See Figure 13-5)

(a) Place injector and air inlet adapter (9, Figure 13-5) in position in the engine compartment.

(b) Attach air inlet adapter (9) to injector with the two forward bolts (12).

(c) Assemble shock mounts on mounting bracket.

1 Place one large diameter shock mount (14) on each side of bracket, aligned with the hole.

2 Insert small diameter shock mount (15) into two large diameter shock mounts (14) and mounting bracket.

3 Insert metal spacer (16) into small diameter shock mount.

UNCONTROLLED COPY WHEN DOWNLOADED OR PRINTED

Visit www.enstromhelicopter.com for instructions to order an original manual and to register for email notification of updates.

(d) Install injector and air inlet adapter with bolts (12) and (13). Install bolts (13) with one 1/4" Harper washer (17) on each side of the shock mounts. Torque 40-50 in-lb/4.5-5.6 Nm.

(e) Connect air inlet hose (8) to adapter (9). Secure with clamp (18).

(f) Insert gasket (10) between injector and turbocharger adapter and secure components with four bolts (7). Torque 100-140 in-lb/11.3-15.8 Nm.

(g) Safety wire injector inlet adapter bolts (7).

(h) Connect throttle cable (5) and wastegate actuating rod (6).

(i) Connect fuel line (3) and outlet (4) lines.

(j) Connect mixture control (2).

(k) Connect hose (1) to blast tube cover.

CAUTION: ON NEW SERVOS, WHEN TRANSFERRING BLAST TUBE ASSEMBLY BY REMOVING AMC SCREWS AND REPLACING THEM, BE SURE THE GASKET IS NOT ROTATED TO BLOCK VENT HOLE.

(l) Check security of all connections.

NOTE: After installing the servo, ensure that the AMC cover is not contacting the pylon tube. A flat-bladed screwdriver may be used to slightly modify the shape of the cooling shroud and prevent contact and potential vibration.

(m) Install turbocharger if it has been removed (Para. 13-5, D).

(n) Test run engine to ensure freedom of control movement and proper function.

(o) Shut engine down and inspect for leaks.

(8) Injector – Adjustments

(a) Idle Mixture and rpm

1 Perform idle mixture operational check (Para. 13-4, D, (2), (a)).

2 Loosen jam nut on mixture adjustment linkage rod (Figure 13-4).

3 Richen or lean the fuel flow to provide a 0 to 25 rpm rise before shutdown.

a Turning the coarse thread end of the rod into the throttle lever block leans the fuel mixture (mixture adjustment linkage shortens).

b Turning the coarse thread end of the rod from the throttle lever block richens the fuel mixture (mixture adjustment linkage lengthens).

UNCONTROLLED COPY WHEN DOWNLOADED OR PRINTED

Visit www.enstromhelicopter.com for instructions to order an original manual and to register for email notification of updates.

4 While making adjustments, if the rod does not have proper thread engagement or disengages from the throttle lever block, it will be necessary to remove, adjust, and reassemble linkage rod, threaded pin and block as follows:

a Remove cotter pins and washers holding the throttle lever blocks to the arms on the fuel injector and remove assembly.

b Measure the overall length.

c Disassemble the rod from the blocks.

d Reassemble the rod to the previously measured length, allowing enough thread at each end for further adjustment, if required.

e Install assembly to the arms of the fuel injector.

NOTE: The spring washers must be installed between the arm of the fuel servo and the idle mixture blocks. See Figure 13-4.1.

5 After each adjustment, operate the engine up to 2200 rpm and back to idle to allow the system to normalize.

6 Adjust the idle mixture until the engine will accelerate through 1800 to 2200 rpm range without stuttering.

7 Perform mixture operational check (Para. 13-4, D, (2), (a)).

8 Secure the jam nut on the idle mixture adjustment rod.

9 Perform normal shutdown procedure.

NOTE: Optional alternate idle mixture adjustment: (Required equipment: 150 cc flask and spare 28-12463-1 fuel outlet line).

Method: Engine off, mixture full rich, main fuel valve on, throttle at idle, attach spare fuel line to servo outlet, turn boost pump on and measure flow in cc. For one minute - flow should be 90-100CC. If not, readjust idle mixture to required flow.

Perform mixture operational check (Para. 13-4, D, (2), (a).

(9) Injector – Repairs

(a) Lapping idle valve and mixture control valve:

1 Disconnect mixture control cable (2, Figure 13-5, Inset B) from the injector mixture control lever.

2 Remove the following:

a Two screws holding the mixture control lever assembly

b Mixture control level assembly

c Packing

UNCONTROLLED COPY WHEN DOWNLOADED OR PRINTED

Visit www.enstromhelicopter.com for instructions to order an original manual and to register for email notification of updates.

d Idle valve

NOTE: A hook fabricated from 1/8” brass rod can be used to hook the orifice of the idle valve and gently work it out.

3 Visually inspect non-tapered end of valves and control plates for scoring.

4 Remove scores by lapping components in a figure 8 pattern with crocus cloth and clean oil on a surface plate.

5 Wash components with clean gasoline or solvent.

6 Reinspect components to ensure they are free of scores.

7 Reinstall the components as follows:

a Idle valve, flat side first

NOTE: Idle valve has a full length keyed slot.

b New packing and O-ring on mixture control valve

c Mixture control valve, flat side out

d Mixture control lever assembly

8 Connect mixture control cable.

9 Perform leakage check.

E. Mixture Control

(1) General Information (See Figure 13-6).

The mixture control cable is manually operated by depressing the knob in end of control handle and pushing inward to richen mixture and pulling out to lean mixture. The mixture control handle also has a vernier adjustment to complete fine mixture adjustments. Vernier adjustments are made by turning the large diameter portion of the control handle.

CAUTION: IT IS IMPORTANT TO KEEP FRICTION ON THE MIXTURE CONTROL SHAFT TO PREVENT VIBRATION FROM TURNING THE VERNIER CONTROL DURING FLIGHT. IF UNOBSERVED, CYLINDER HEAD TEMPERATURES AND EXHAUST GAS TEMPERATURE COULD EXCEED LIMITS, CAUSING ENGINE AND/OR TURBOCHARGER DAMAGE.

Mixture control friction should be adjusted to provide sufficient "drag" to prevent rotation due to vibration yet allow normal mixture adjustment without binding. Friction adjustments can be made by varying the torque on the large hex nut (11, Figure 13-6) by finger pressure without disturbing the mounting position of the control.

UNCONTROLLED COPY WHEN DOWNLOADED OR PRINTED

Visit www.enstromhelicopter.com for instructions to order an original manual and to register for email notification of updates.

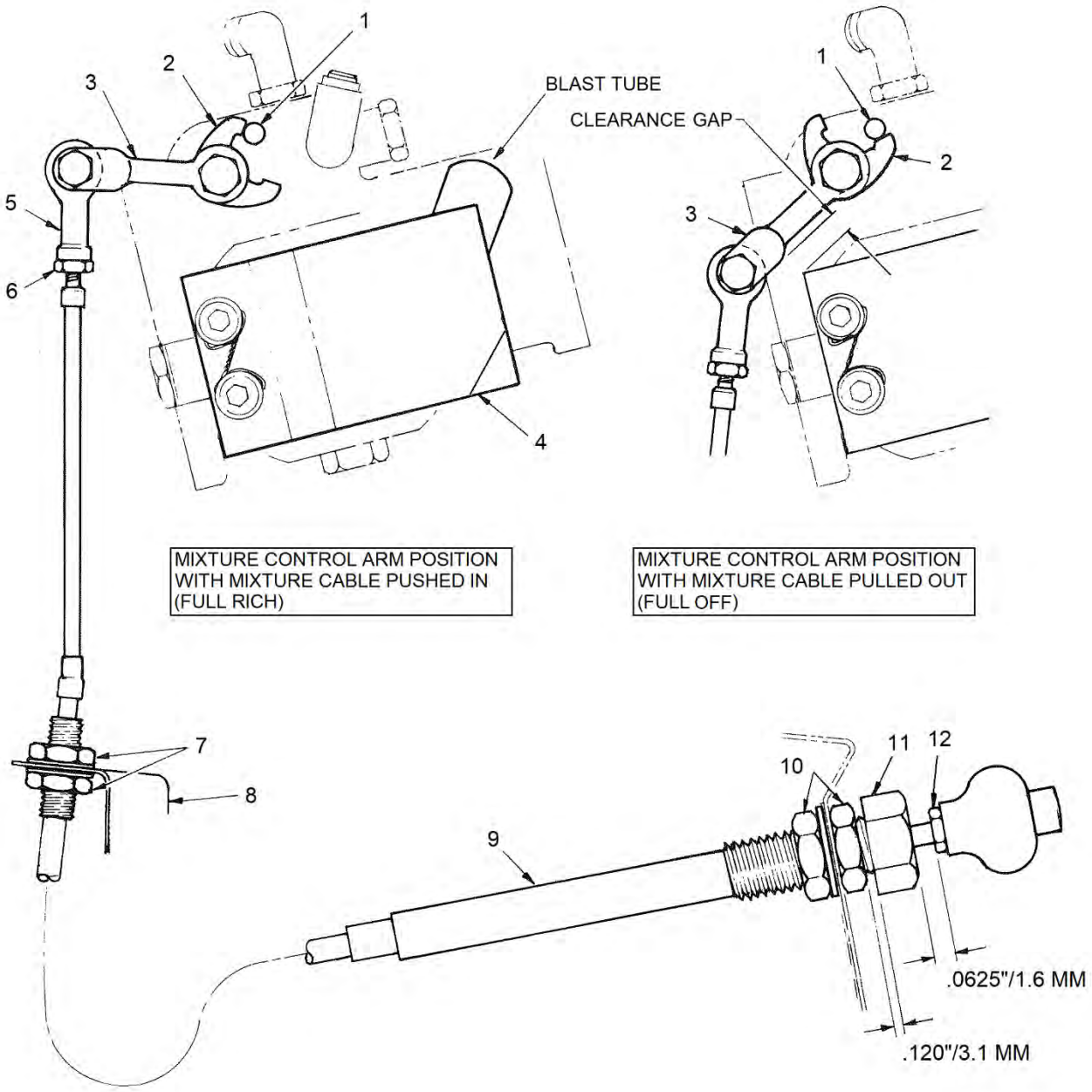

1. Stop
2. Mixture Control Arm
3. Mixture Control Lever
4. Cover (Blast Tube Assembly)
5. Rod End
6. Nut
7. Nut
8. Mount Bracket
9. Mixture Cable
10. Nut
11. Friction Nut
12. Jam Nut

Figure 13-6. Mixture Control Rigging

UNCONTROLLED COPY WHEN DOWNLOADED OR PRINTED

Visit www.enstromhelicopter.com for instructions to order an original manual and to register for email notification of updates.

(2) Mixture Cable – Removal

(a) Remove fiberglass seat deck (Para. 8-8, A) and firewall inspection panels.

(b) Remove covers from instrument console.

(c) Disconnect mixture cable rod end (5) from mixture control lever (3) on injector.

(d) Break jam nut (6) loose from rod end (5) and remove both items from cable (9).

(e) Remove jam nuts (7) securing mixture cable to pylon mount which is aft of firewall. Remove nuts from cable.

(f) Cut tie wraps securing cable in seat structure.

(g) Remove jam nut (10) from mixture cable inside instrument console.

(h) Carefully pull mixture cable (9) through seat structure and out through instrument console.

(3) Mixture Cable – Installation

(a) Install mixture cable (9, Figure 13-6) through instrument panel and route it through seat structure and firewall.

NOTE: Install jam nut (10) on cable before routing through seat structure.

(b) Secure mixture control to instrument console with jam nuts (10).

NOTE: Mixture control is to be located in panel with a 0.120 in/3.1 mm gap between friction nut (11) and jam nut (10).

(c) Route mixture cable through pylon mount (8) on aft side of firewall and temporarily secure with jam nuts (7).

NOTE: The final steps of cable installation are completed in the following rigging procedure.

(4) Mixture Control Rigging

(a) Locate mixture control lever (3, Figure 13-6) on injector as follows:

1 Rotate the mixture control arm (2) until it hits stop (1) in the full rich position.

2 Locate mixture control lever (3) in a down position, leaving a slight gap between lever and blast tube cover (4) while aligning notches to mesh with mixture control arm (2).

3 Install nut (19, Figure 13-5) to secure mixture control lever (3) in this position.

NOTE: Recheck arm and lever positions after tightening nut. Control arm will sometimes rotate with nut during torque procedure.

UNCONTROLLED COPY WHEN DOWNLOADED OR PRINTED

Visit www.enstromhelicopter.com for instructions to order an original manual and to register for email notification of updates.

(b) Install jam nut (6) and rod end (5) on mixture cable. Rotate rod end until it bottoms out on cable.

(c) Attach mixture cable rod end to mixture control lever (3) and secure with hardware. nut (19, Figure 13-5) and install cotter pin.

(d) Tighten jam nut (6) against rod end (5).

(e) Position mixture control knob allowing 1/16 in/1.6 mm gap between jam nut (12) and friction nut (11).

(f) With mixture control in this position, loosen jam nuts (7) at pylon mount and adjust cable sheath at mount bracket (8) until mixture control arm (2) hits the stop (1). Secure jam nuts (7).

NOTE: Mixture control arm (2) must be in full rich position as shown in Figure 13-6.

(g) Pull mixture control knob out to full lean position and check that control arm (2) hits the stop (1).

(h) Inspect all hardware for security.

(i) Install covers on instrument console.

(j) Install firewall inspection panels and fiberglass seat deck (Para. 8-8, D).

F. Automatic Mixture Control (AMC)

(1) General Information

This unit provides a variable orifice between impact pressure. It is responsive to both changes in air temperature and pressure (density) and will keep the differential air pressure between the two air chambers constant for any airflow, regardless of changes in the air inlet density.

The automatic mixture control incorporates a contoured needle that is moved in or out of an orifice by a bellows assembly. The sealed bellows, which reacts to changes in air density, is filled with helium gas and a small quantity of inert oil to help damp vibration. Under high density conditions, the bellows are contracted and positions the needle in the orifice so that the effect of impact pressure on venturi throat pressure in the airflow section is at a minimum. As density decreases, due to either a decrease in pressure or an increase in temperature, the bellows elongate and repositions the needle in the orifice to increase the effect of impact pressure on venturi pressure which decreases the air metering forces to maintain a constant fuel-air ratio.

Attached to the aluminum housing, enclosing the temperature sensitive AMC unit, is a blast tube assembly which provides the necessary cooling airflow.

(2) AMC Blast Tube Assembly – Removal

(a) Disconnect hose (1) from blast tube shroud.

UNCONTROLLED COPY WHEN DOWNLOADED OR PRINTED

Visit www.enstromhelicopter.com for instructions to order an original manual and to register for email notification of updates.

(b) Remove safety wire and two screws (11, Figure 13-5) attaching blast tube assembly to the fuel servo and AMC unit.

NOTE: Observe position of gaskets and spacer to ensure correct reassembly and operation.

(3) AMC - Cleaning

NOTE: Enstrom does not recommend disassembly of the AMC for cleaning.

(4) AMC Blast Tube Assembly – Installation

(a) Install screws (11) and safety (MS20995C32).

(b) Connect hose (1) to blast tube shroud and secure with clamp.

NOTE: Ensure that the AMC cover is not contacting the pylon tube. Refer to Para. 13-4, D, (7), (l) NOTE.

G. Fuel Servo Screen

(1) Servo Screen - Removal

(a) Disconnect hose (1, Figure 13-5) from blast tube assembly.

(b) Disconnect and cap fuel inlet line.

(c) Loosen jam nut on fuel inlet elbow and turn elbow to point downward.

NOTE: Place a container under inlet fitting to catch fuel that drains from the fuel inlet elbow.

(d) Cut safety wire and loosen plug that is installed in servo at opposite end of screen.

NOTE: When the hydraulic lock is released as the plug is loosened, remaining fuel inside the screen chamber will drain from the inlet plug.

(e) Remove plug on aft side of servo and carefully pull out screen.

(2) Servo Screen - Cleaning

Refer to Bendix Overhaul Manual for RSA-AB1 Fuel Injectors, Form 15-419.

(3) Servo Screen - Installation

(a) Insert screen into injector body with spring oriented aft. Twist spring carefully and ensure screen seats fully in inlet fitting.

(b) Install new O-ring on fuel inlet elbow. Torque and safety.

(c) Turn inlet fitting back to permit attachment of fuel line.

(d) Connect fuel inlet line.

UNCONTROLLED COPY WHEN DOWNLOADED OR PRINTED

Visit www.enstromhelicopter.com for instructions to order an original manual and to register for email notification of updates.

(e) Torque inlet fitting jam nut.

(f) Torque inlet line to inlet fitting.

(g) Turn on main fuel valve.

(h) Run engine and check for fuel leakage around the inlet elbow.

H. Fuel Flow Divider

(1) Flow Divider - Removal

(a) Remove top right and left engine baffles.

(b) Disconnect fuel gauge (1) and fuel inlet (2) lines (Figure 13-7, View A) from flow divider.

(c) Disconnect fuel lines (5).

(d) Remove bolt (6) attaching center of flow divider mount bracket.

(e) Remove two bolts (4) attaching inboard side of mount bracket to engine case.

(f) Remove flow divider and mount bracket from engine compartment.

(2) Flow Divider - Disassembly

Refer to Bendix Form 15-540, latest revision, Flow Divider Overhaul Manual.

(3) Flow Divider - Installation

(a) Place flow divider and mount bracket in position on the top right side of the engine (Figure 13-7, View A).

(b) Install bolt (6) attaching center of mount bracket to engine case.

(c) Install two bolts (4), washers and nuts attaching top side of mount bracket to engine case.

(d) Connect fuel gauge (1) and fuel inlet (2) lines.

(e) Connect fuel lines (5).

(f) Briefly run engine and check connections for fuel leaks.

(g) Install baffling.

I. Air Bleed Nozzles

(1) Nozzles - Troubleshooting

Engines operating with a plugged nozzle may exhibit some of the following characteristics:

NOTE: If the engine exhibits any of the following, refer to step (2) below to perform an operational check.

UNCONTROLLED COPY WHEN DOWNLOADED OR PRINTED

Visit www.enstromhelicopter.com for instructions to order an original manual and to register for email notification of updates.

(a) Rough idle (with severe obstruction, a popping exhaust noise).

(b) Roughness during high power settings.

(c) Engine may quit with power reduction with severe obstruction.

(d) Fuel nozzle pressure will indicate slightly higher fuel flows than normal.

(e) Slightly higher MAP setting than normal for conditions.

(2) Nozzles - Operational Check

(a) Run or hover the helicopter until it starts to run poorly. Shut down and quickly remove the static lines from the manifolds at the valve covers.

(b) If fuel runs out of one of the lines, one of the nozzles on that side of the engine is plugged.

(c) Remove the intake pipes from the cylinder.

NOTE: If it has been determined which side of the engine has the plugged nozzle, it is necessary to only remove the intake pipes of the side with the plugged nozzle. If it cannot be determined which nozzle is plugged, remove all four intake pipes.

(d) Place metal containers under the intake ports to catch the fuel and run the boost pump with the fuel valve on, the mixture rich, and the throttle wide open.

CAUTION: PERFORM THIS OPERATION OUTSIDE, WITH APPROPRIATE FIRE PREVENTION APPARATUS AVAILABLE. TAKE CARE TO GROUND THE AIRCRAFT. WORKING WITH OPEN FUEL CONTAINERS IS A HAZARDOUS OPERATION.

(e) Using a mirror and a flash light inspect the fuel flow from the nozzles by looking up into the intake port of the cylinder.

(f) The spray pattern must be perfectly formed, needle thin, clear and must shoot all the way across the port and hit the other side. If the stream is not perfectly shaped or spits air, the nozzle must be cleaned (Para. 4 below) or changed.

(g) Do not clean and re-use the old one-piece nozzles. Replace them with new nozzles.

(3) Nozzles - Removal

(a) Remove right and left panels from top of engine.

(b) Disconnect air line hose (7, Figure 13-7, View B) from air line fitting (3).

(c) Disconnect fuel line (5) from nozzle assembly.

(d) Remove air line fitting (3) and spring and spring holders (8) to provide access for socket installation on nozzle and remove nozzles.

NOTE: Use care in retaining the two O-rings (packing) located inside airline fitting for reinstallation.

UNCONTROLLED COPY WHEN DOWNLOADED OR PRINTED

Visit www.enstromhelicopter.com for instructions to order an original manual and to register for email notification of updates.

(4) Nozzles – Cleaning (Ref. Figure 13-8)

NOTE: Cleaning the nozzles annually as was previously published is not required. Clean a nozzle only if it is plugged.

NOTE: Keep each restrictor with its respective body.

(a) Remove fuel restrictor (7) from nozzle body (8) and clean in MEK or acetone.

(b) Use air pressure to clean the nozzle body (8).

(5) Nozzles - Installation (See Figure 13-7, View B)

(a) Install nozzle assembly in cylinder. Torque to 60 in-lb/6.8 Nm.

NOTE: The bleed hole in the side of the nozzle should be pointing up.

(b) Install air line fitting (3) and nozzle spring and spring holders (8).

NOTE: Be sure to install both O-rings under air line fitting.

(c) Connect fuel line (5) to nozzle assembly. Torque 25-50 in-lb/2.8-5.6 Nm maximum

(d) Connect air line hose (7) to air line fitting (3) and secure with clamp.

(e) Install right and left top engine panels.

UNCONTROLLED COPY WHEN DOWNLOADED OR PRINTED

Visit www.enstromhelicopter.com for instructions to order an original manual and to register for email notification of updates.

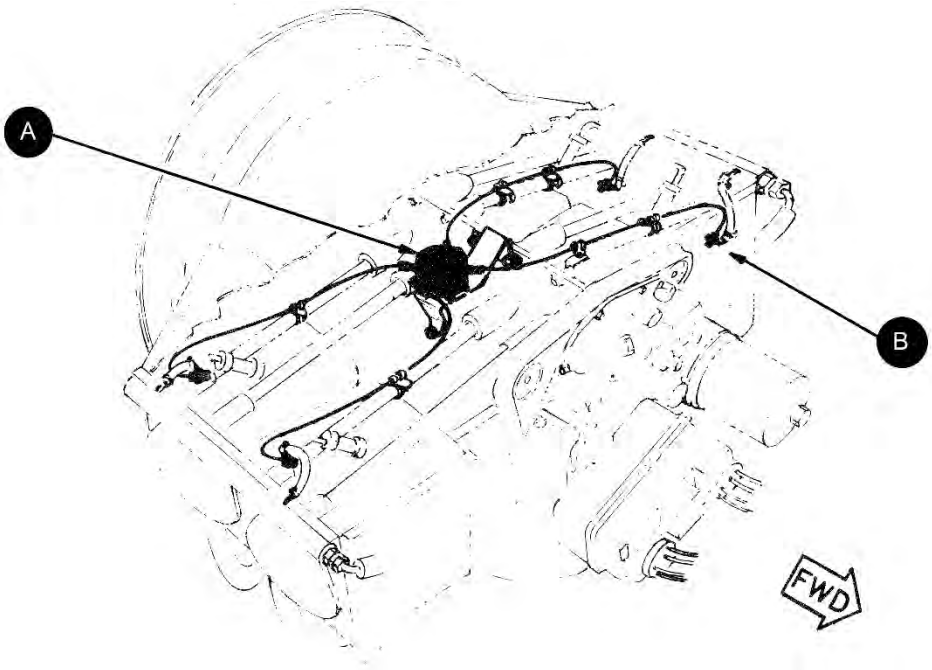

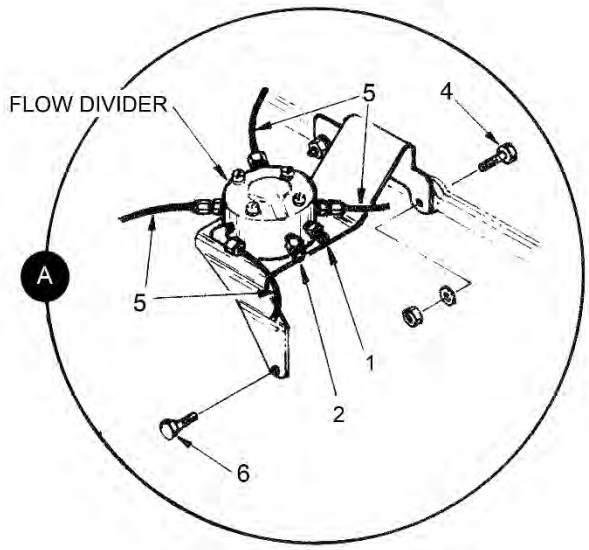

FLOW DIVIDER INSTALLATION

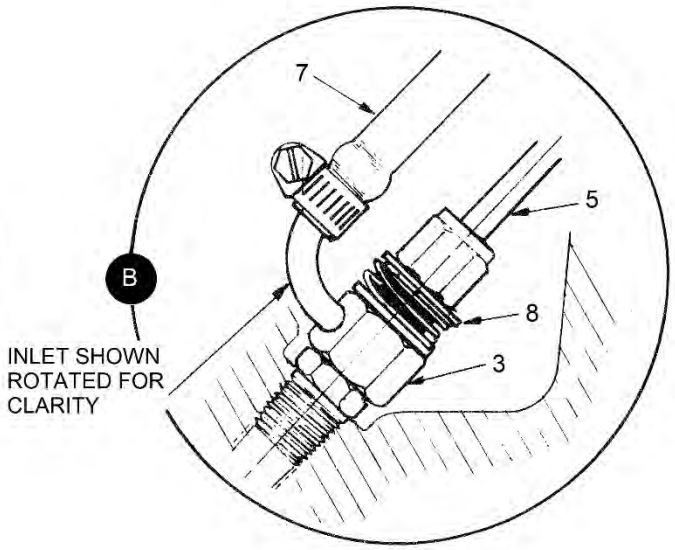

TYPICAL AIR BLEED
NOZZLE INSTALLATION
LOOKING AFT

1. Fuel gauge (line)
2. Fuel inlet (line)
3. Air line fitting
4. Bolt
5. Fuel line
6. Bolt
7. Air line
8. Spring/Spring holders (See Figure 13-8)

Figure 13-7. Flow Divider and Air Bleed Nozzles

UNCONTROLLED COPY WHEN DOWNLOADED OR PRINTED

Visit www.enstromhelicopter.com for instructions to order an original manual and to register for email notification of updates.

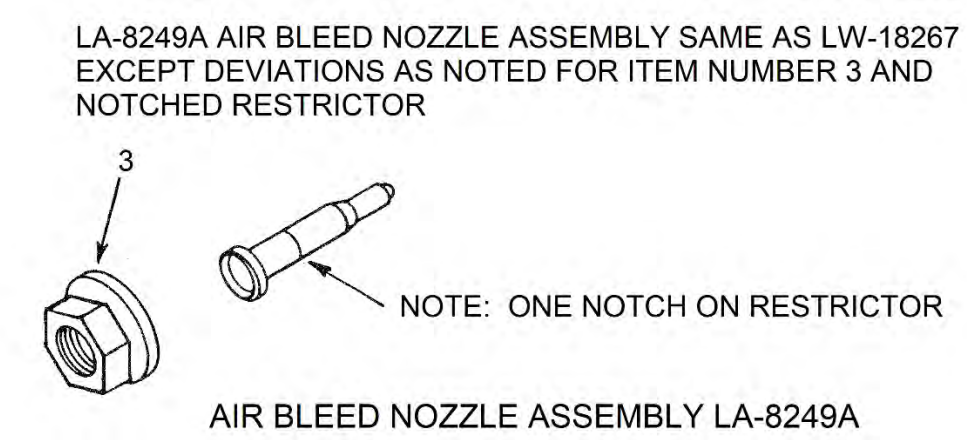

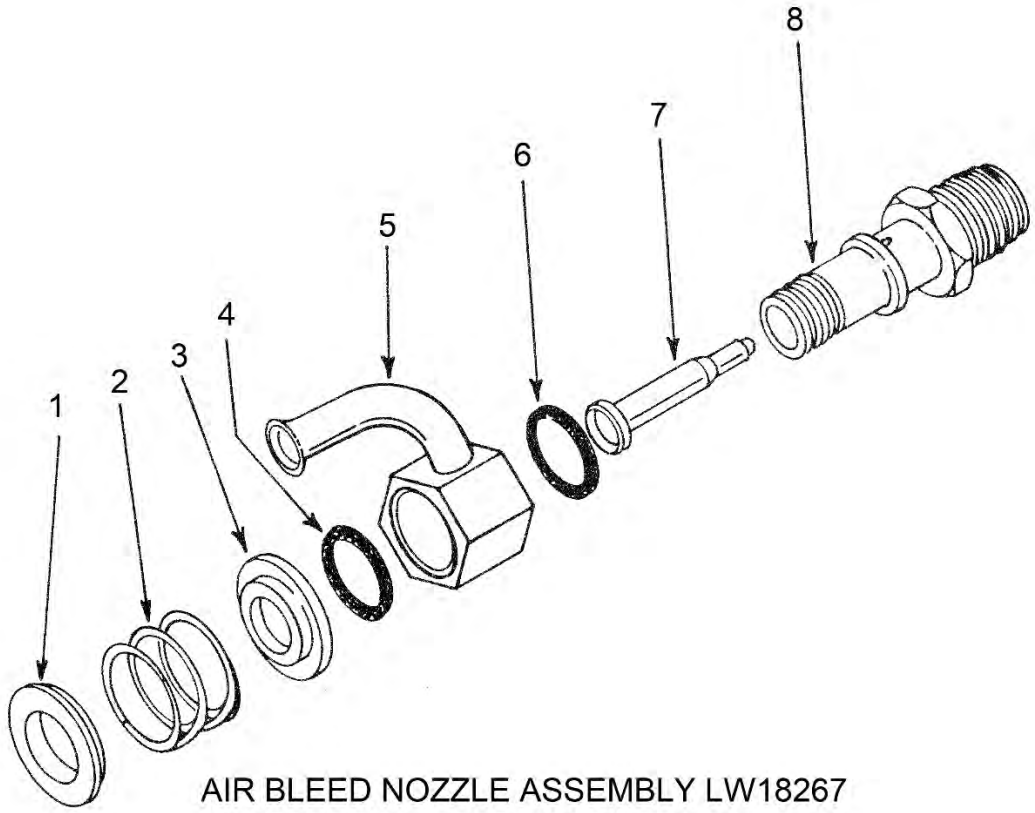

1. Spring holder
2. Spring
3. Spring holder
4. Preformed packing
5. Air line fitting
6. Preformed packing
7. Restrictor
8. Nozzle body

Figure 13-8. Air Bleed Nozzle Assembly

UNCONTROLLED COPY WHEN DOWNLOADED OR PRINTED

Visit www.enstromhelicopter.com for instructions to order an original manual and to register for email notification of updates.

13-5 TURBOCHARGER

A. General Information

The turbo unit's primary moving parts are a rotating shaft with a turbine wheel on one end and a compressor impeller on the other, all precision balanced, and each impeller contained in its own housing. The turbine wheel, driven by exhaust gas energy, drives the impeller which compresses intake air to a density equivalent of near sea level and delivers it to the engine intake. This increased volume of air allows the engine to "breathe" with the same volumetric efficiency, and produce equivalent power, at all altitudes up to 12,000 feet density altitude.

When turbocharged, the engine's entire intake system is pressurized. The fuel/air mixture is literally forced into the cylinder the instant the intake valve starts to open, completely filling the entire chamber prior to the start of the compression stroke. This ensures a full charge of the fuel/air mixture, resulting in more power during each combustion stroke. It also ensures a more evenly balanced air/fuel/power ratio between cylinders. Refer to Figure 13-9 for installation detail and numbered items.

Pertinent data established in FAA AD 2023-09-09, *Exhaust Turbine System (Recip*) and applicable data provided in publication, *Best Practices Guide for Maintaining Exhaust System Turbocharger to Tailpipe V-band Couplings/Clamps* has been included in the relevant procedures that follow. These publications can be found on the internet for further information.

B. Turbocharger – Removal

(1) Remove seat cushions and back access panel in fiberglass seat deck.

(2) Remove firewall access panels from cabin firewall.

(3) Open left side engine panel.

(4) Loosen v-band coupling (1, Figure 13-9) connecting tail pipe (or muffler) to turbocharger. Spread open to permit v-band coupling to slip off flange and onto tail pipe.

CAUTION: THE V-BAND COUPLING SECURING THE TAIL PIPE TO THE TURBO IS NOT HINGED. DO NOT SPREAD THE V-BAND COUPLING ANY FARTHER THAN NECESSARY.

(5) Remove exhaust pipe gasket (2, Figure 13-9).

(6) Remove the tail pipe or muffler assembly (depending on which is installed).

(7) Disconnect and remove turbo heat shield (3).

(8) Remove exhaust inlet v-band coupling (4) and slide adapter collar (5) down on the exhaust tube. Remove gasket (2).

(9) Loosen induction tube clamps (6) and slide adapter collar down on the induction inlet tube.

(10) Disconnect oil inlet line (18) and outlet lines (8).

NOTE: The outlet line should be disconnected at the junction to the hard line and left attached to the turbocharger to avoid flexing the line and causing leaks from cracks in the flexible hose.

(a) Leave the lower elbow (9) and flexible line (8) attached to the turbocharger.

UNCONTROLLED COPY WHEN DOWNLOADED OR PRINTED

Visit www.enstromhelicopter.com for instructions to order an original manual and to register for email notification of updates.

(11) Remove the four bolts (10) from the turbo inlet adapter (11) at the injector. Leave inlet adapter (11) mounted on the turbocharger.

(12) Detach turbocharger from the turbo mount brackets (12) and (19) by removing bolts (16).

NOTE: Identify washers (shims) (17) for proper assembly.

(13) Slide turbocharger (with turbo inlet adapter attached) up and off the mount brackets (12) and (19).

(14) Cover openings at injector, induction tube, and exhaust system to prevent contamination.

(15) Remove screws (14) to remove injector inlet adapter (11) and gasket (13) from turbocharger.

NOTE: Identify orientation of adapter to turbocharger for reassembly.

NOTE: Replace slotted head screws (AN503-10-8) with cap screws (P/N NAS1352-3H8P).

C. Turbocharger – Inspection

NOTE: Refer to the publication, *Best Practices Guide for Maintaining Exhaust System Turbocharger to Tailpipe V-band Couplings/Clamps* for comprehensive inspection and installation tips as well as depictions of various v-band coupling failures. Refer also to Figure 8-3.1 when performing the inspection steps in paragraphs (5) and (6).

(1) Check turbocharger unit for the following:

(a) Rotating unit rubbing housing.

(b) Cracked or distorted housing.

(c) Dirt accumulation on impeller.

(d) Carbon buildup on turbine wheel.

(e) Foreign object damage.

(f) Evidence of looseness between compressor and turbine sections.

(2) Check turbocharger adapter installation for the following:

(a) Check condition of gasket (13) and security of visibly accessible screws (14).

1 If screws are loose or gasket shows signs of deterioration, remove the turbocharger with adapter. Replace gasket as required. Torque and safety screws (35 in-lb/4.0 Nm).

2 Inspect the condition of the welds on the adapter flanges. The weld should be continuous and in good condition.

NOTE: The round flange on the adapter may have a segmented weld joint on the outside of the adapter; however, the inside weld on the flange must be a continuous weld joint.

UNCONTROLLED COPY WHEN DOWNLOADED OR PRINTED

Visit www.enstromhelicopter.com for instructions to order an original manual and to register for email notification of updates.

(3) Check induction system hose clamps (6) for damage or faulty operation.

(4) Visually inspect v-band coupling (4) (P/N 28-12162-1) as installed:

CAUTION: ENSURE V-BAND COUPLING SELF-LOCKING NUTS ARE SERVICEABLE AND RETAIN THEIR LOCKING CAPABILITY.

NOTE: P/N 28-12162-1 is a hinged v-band coupling that connects the turbocharger inlet to the exhaust manifold.

NOTE: Inspection of P/N LW-13464, as installed, requires use of a flashlight or other bright light source and an inspection mirror.

(a) Using a flashlight or other bright light source, inspect the v-band coupling, the area around the v-band coupling, the turbocharger inlet, and the exhaust manifold for exhaust stains, soot, and discoloration. If any conditions are found, note the pattern and location of the condition relative to the v-retainers, remove the coupling, and perform the inspections in step (6).

(5) Visually inspect v-band coupling (1) (P/N LW-13464) as installed:

NOTE: Per AD 2023-09-09, the inspections listed in step (6) may be performed as an alternative to the inspection steps listed in (5).

NOTE: P/N LW-13464 is a continuous, spot-welded, multi-segment v-band coupling that connects the tailpipe (or muffler) to the turbocharger outlet.

WARNING: NEVER USE HIGHLY FLAMMABLE SOLVENTS, WIRE BRUSHES, OR ABRASIVES TO CLEAN EXHAUST SYSTEMS. DO NOT USE AN ETCH TOOL, GRAPHITE LEAD PENCIL, OR SCRIBE TO APPLY A MARK ON EXHAUST PIPES.

NOTE: Inspection of P/N LW-13464, as installed, requires use of a flashlight or other bright light source and an inspection mirror.

(a) Using a flashlight or other bright light source, inspect the v-band coupling, the area around the v-band coupling, and tailpipe flange for exhaust stains, soot, and discoloration. If any conditions are found, remove the coupling and proceed to step (6).

(b) Inspect the v-band coupling outer band for cracks, paying particular attention to the spot weld areas. If there is a crack, before further flight, remove the v-band coupling from service and install a new v-band coupling.

(c) Inspect the v-band coupling for looseness and for separation of the outer band from the v-retainer segments at all spot welds. If there is any looseness or separation of the outer band from any retainer segments, before further flight, remove the v-band coupling from service and install a new v-band coupling. To facilitate the inspection, perform the following:

1 Remove the safety wire.

2 Apply a penetrant (LPS 2, ACF-50, or equivalent) to the base of the nut.

3 Loosen the nut.

4 Lightly tap the v-band coupling circumference to check that the outer band is securely attached to the v-retainer segments. Finger tap or use a soft rubber mallet.

UNCONTROLLED COPY WHEN DOWNLOADED OR PRINTED

Visit www.enstromhelicopter.com for instructions to order an original manual and to register for email notification of updates.

(d) Inspect the v-band coupling outer band for cupping, bowing, and crowing as depicted in Figure 13-8.1. If there is cupping, bowing, or crowning, before further flight, remove the v-band coupling and proceed to step (6).

(e) Inspect the area of the v-band coupling, including the outer band, opposite the t-bolt for damage and distortion. If there is any damage or distortion, before further flight, remove the v-band coupling from service and install a new v-band coupling.

(f) Using a mirror, inspect the v-band coupling to determine whether there is a space between the v-retainer segments next to the t-bolt. If there is no space between the two v-retainer coupling segments next to the t-bolt, before further flight, remove the v-band coupling from service and install a new v-band coupling.

(g) Determine whether the v-band coupling nut is properly torqued and apply correct torque as necessary.

(6) Visually inspect v-band couplings (1) (P/N 28-12162-1) and (4) (P/N LW-13464), as removed, as follows:

NOTE: Per AD 2023-09-09, remove P/N LW-13464 v-band coupling and do the inspections listed in step (6) if required by step (5) (a) or (d) or as an alternative to the inspection steps listed in (5).

(a) Using crocus cloth or fine abrasive cloth and mineral spirits, clean the outer band of the v-band coupling. Pay particular attention to the spot weld areas on the v-band coupling. If there is corrosion that cannot be removed by cleaning or if there is pitting, before further flight, remove the v-band coupling from service and install a new v-band coupling.

(b) Using a 10X magnifying glass, visually inspect the outer band for cracks, paying particular attention to the spot weld areas. If there is a crack, before further flight, remove the v-band coupling from service and install a new v-band coupling.

(c) Visually inspect for flatness of the outer band using a straight edge. Lay the straight edge across the width of the outer band as depicted in Figure 13-8.1. If the gap between the outer band and the straight edge exceeds 0.062 inch/1.57 mm, before further flight, remove the v-band coupling from service and install a new v-band coupling.

(d) With the t-bolt in the 12 o'clock position, visually inspect the attachment of the outer band to the v-retainer coupling segments for gaps between the outer band and the v-retainer coupling segments from the 1 o'clock through 11 o'clock positions. Use of backlighting may facilitate inspection for gaps. If there are any gaps between the outer band and the v-retainer coupling segments, before further flight, remove the v-band coupling from service and install a new v-band coupling.

(e) Visually inspect the bend radii of the v-retainer coupling segments, throughout the length of the segment, as depicted in Figure 13-8.1 for cracks. If there are any cracks, before further flight, remove the v-band coupling from service and install a new v-band coupling.

(f) Visually inspect the outer band opposite the t-bolt for damage (distortion, creases, bulging, or cracks) caused by excessive spreading of the coupling during installation or removal. If there is any damage, before further flight, remove the v-band coupling from service and install a new v-band coupling.

(g) If either v-band coupling (1) or (4) passes all of the inspections, it may be re-installed.

UNCONTROLLED COPY WHEN DOWNLOADED OR PRINTED

Visit www.enstromhelicopter.com for instructions to order an original manual and to register for email notification of updates.

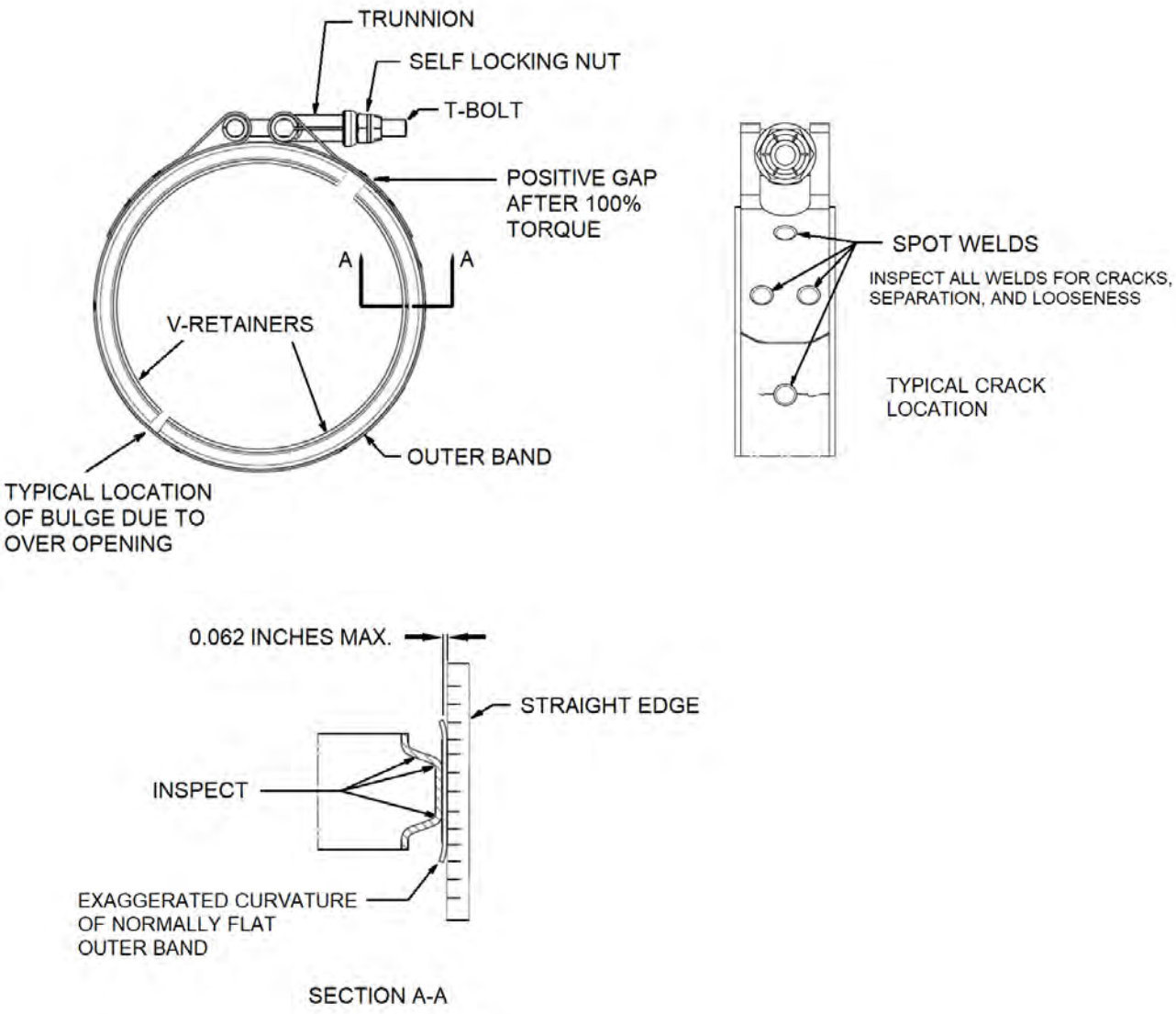

Figure 13-8.1. V-band Coupling P/N LW-13464 Schematic – Inspection Checks

Visit www.enstromhelicopter.com for instructions to order an original manual and to register for email notification of updates.

D. Turbocharger – Installation

WARNING: CRACKS AS WELL AS INCORRECT ASSEMBLY OR INSTALLATION OF THE TURBOCHARGER EXHAUST SYSTEM CAN ADVERSELY AFFECT ENGINE OPERATION, OR RESULT IN RELEASE OF HOT AND TOXIC GASES, WHICH CAN CAUSE DAMAGE TO NEARBY COMPONENTS AND SYSTEMS OR A FIRE.

CAUTION: USE CARE TO SUPPORT THE ENTIRE EXHAUST SYSTEM DURING INSTALLATION. DO NOT FORCE, PRY, OR BEND COMPONENTS DURING FINAL ALIGNMENT TO PREVENT DAMAGE TO THE PARTS.

(1) Prior to installation:

(a) Ensure the v-band couplings (1) and (4) and attaching hardware are free from any damage such as cracks, gouges, tears, bulges, and fractures.

(b) Ensure the turbocharger exhaust exit flange and exhaust tailpipe flange interfaces are free from any wavy condition, cracks, warps, gouges, nicks, grease, dirt, or deposits.

(2) Install new gasket (13) between turbo inlet adapter (11) and turbocharger. Secure turbo inlet adapter (11), properly oriented, to turbocharger. Torque screws (14) to 35 in-lb/4.0 Nm and safety with .020 or .025 safety wire.

NOTE: Replace slotted head screws (AN503-10-8) with cap screws (P/N NAS1352-3H8P).

(3) If removed, install the lower oil outlet elbow (9) and flexible outlet line to the turbocharger on the bench. If required, install adapter (21) and O-ring (22).

NOTE: Adapter (21) and O-ring (22) installation is effective for F-28F S/N 832 and subsequent and 280FX S/N 2147 and subsequent and should be retrofitted onto older serial number helicopters to help with alignment of the oil outlet line.

NOTE: Apply a thread sealant to adapter (21) and elbow (9) on installation (Loctite 569, or equivalent).

NOTE: Orient elbow (9) for clearance with mounting bracket upon installation.

(4) Install oil inlet nipple (7), if removed.

NOTE: Apply a thread sealant (Loctite 569, or equivalent) to nipple (7).

(5) Install turbocharger on mount brackets (12) and (19) with stainless bolts (16), nuts, washers, and shims (17). The bolts should be installed with the heads inboard and lubricated with anti-seize before installation. DO NOT torque bolts (16).

NOTE: If required, turbo mount brackets may be secured only finger tight to facilitate proper turbo alignment.

NOTE: It may be required to loosen the turbocharger center divider clamp (20) so that the exhaust side housing can be turned on the center section to install the turbo on to the mounts. DO NOT break the seal.

UNCONTROLLED COPY WHEN DOWNLOADED OR PRINTED

Visit www.enstromhelicopter.com for instructions to order an original manual and to register for email notification of updates.

(7) Install turbocharger heat shield (3). Safety wire from a cap on one side of each mount bracket, behind the bracket, to the next cap.

(8) Install new gasket (15) and the bolts (10) connecting the injector to turbo inlet adapter (11). DO NOT torque bolts (10).

CAUTION: WHEN INSTALLING EXHAUST SYSTEM COMPONENTS, INITIALLY TIGHTEN HARDWARE FASTENERS FINGER-TIGHT. ENSURE ALL COMPONENTS ARE ALIGNED PROPERLY BEFORE APPLYING FINAL TORQUE TO FASTENERS.

(9) Slip clamps (6) over ends of induction tube (24).

(10) Install the flexible sleeve (24) with clamps (6) between the induction inlet tube and the turbocharger compressor.

NOTE: The turbocharger center divider clamp (20) may be released to rotate the compressor section for adjustment. DO NOT break the seal.

(11) Torque clamps (6) 40-45 in-lb/4.5-5.1 Nm and safety (MS20995C32).

NOTE: If it is preferred to safety the hose clamp screw through a hole in the head of the screw, drill through the clamp screw head with a No. 55 (0.052” diameter) drill prior to installation and torquing.

(a) Thread the ends of the safety wire through the gap between the band and the screw housing, pulling the loop of the wire securely over the slot in the screw head or through the drilled hole and complete the safety. Refer to Figure 13-9.1.

(12) Connect exhaust collar (5) to the exhaust inlet. Rotate the collar for correct alignment.

(13) Install v-band coupling (1) (P/N LW-13464) and v-band coupling (4) (P/N 28-12162-1).

NOTE: Figures 13-8.2 through 13-8.5 depict a P/N LW-13464 installation. Differences in the installation of P/N 28-12162-1 are noted where applicable.

CAUTION SUBSTITUTION OF A V-BAND COUPLING PART NUMBER OR TYPE FOR ANOTHER COUPLING IS NOT ALLOWED.

WARNING: INCORRECT ASSEMBLY OR INSTALLATION OF THE V-BAND COUPLINGS CAN ADVERSELY AFFECT ENGINE OPERATION OR RESULT IN THE RELEASE OF HOT AND TOXIC GASES, WHICH CAN CAUSE DAMAGE TO NEARBY COMPONENTS, SYSTEMS, OR A FIRE.

(a) Slip the v-band coupling P/N 28-12162-1 (4) over the exhaust inlet.

CAUTION: THE SIDES OF P/N 28-12162-1 V-BAND COUPLING ARE MACHINED TO OPTIMIZE THE FIT ADJACENT TO THE TURBOCHARGER. FOR COUPLINGS MANUFACTURED CIRCA 2015 AND PRIOR, ONLY ONE SIDE WAS MACHINED. INSPECT THE COUPLING TO DETERMINE IF ONE OR BOTH SIDES ARE MACHINED.

CAUTION: INTERFACING FLANGES MUST BE ALIGNED CORRECTLY FOR THE COUPLING INSTALLATION TO ENSURE MAXIMUM SEALING.

UNCONTROLLED COPY WHEN DOWNLOADED OR PRINTED

Visit www.enstromhelicopter.com for instructions to order an original manual and to register for email notification of updates.

NOTE: Anytime the turbocharger inlet v-band coupling is disassembled, it is recommended to install a new metal gasket at reassembly.

1 For v-band coupling (4) (P/N 28-12162-1) machined on one side only, verify the clamp is installed with machined side toward the turbocharger.

2 Place the metal gasket (2) in between the flanges (Figure 13-8.3).

3 Join the flanges.

4 Assemble the v-band coupling (4) over both flanges and the gasket (Figure 13-8.4).

5 Engage the t-bolt on the v-band coupling (4) and press the coupling over the flanges. Using a torque indicator wrench, tighten the nut to approximately 50 in-lb/5.6 N/m (70% of the maximum torque (70 in-lb/7.9 Nm)).

6 If possible, lightly tap the outer periphery of the coupling band in several places perpendicular to the circumference using a soft rubber mallet and a plastic drift (if required) to ensure proper seating and to distribute band tension. Do not tap in such a way that causes deformation.

NOTE: It may require approximately 10-15 tap and torque repetitions to achieve a stabilized torque reading.

7 Ensure there a no gaps at other exhaust system connections and all exhaust system components are correctly aligned before the final torque of all exhaust system hardware.

8 Ensure the turbocharger exhaust inlet flange and exhaust manifold flanges are aligned.

9 Tighten the nut the maximum required torque (70 in-lb/7.9 Nm).

10 Repeat as in steps 6 through 8 until the torque reading stabilizes. Do **NOT** overtorque.

11 Safety wire v-band coupling (4) using two twisted wraps of MS20995C32 safety wire.

(b) Install gasket (2) and connect turbocharger to exhaust outlet with v-band coupling (1) (P/N LW-13464). Ensure alignment of tailpipe flange and turbocharger exhaust exit flange with no gaps (maximum 0.005 in) prior to installing coupling.

CAUTION ENSURE THE TURBOCHARGER EXHAUST EXIT FLANGE AND EXHAUST TAILPIPE FLANGE INTERFACE DOES NOT EXHIBIT ANY NON-FLAT SURFACE OR CORROSION, PITTING, SCALING, OR DEPOSITS. REPAIR BEFORE PROCEEDING.

NOTE: Anytime the v-band coupling is disassembled, it is recommended to install a new metal gasket at reassembly.

UNCONTROLLED COPY WHEN DOWNLOADED OR PRINTED

Visit www.enstromhelicopter.com for instructions to order an original manual and to register for email notification of updates.



Figure 13-8.2. V-band coupling (1), P/N LW-13464, joining the tailpipe to the turbocharger exhaust outlet



Figure 13-8.3. Installing metal gasket, P/N LW-14485



Figure 13-8.4. Flanges and metal gasket joined; V-band coupling positioned over joint

UNCONTROLLED COPY WHEN DOWNLOADED OR PRINTED

Visit www.enstromhelicopter.com for instructions to order an original manual and to register for email notification of updates.



Figure 13-8.5. V-band coupling(1), P/N LW-13464, positioned for ease of spot weld inspections

CAUTION: DURING INSTALLATION OF V-BAND COUPLING P/N LW-13464, USE CARE NOT TO SPREAD OR FORCE THE COUPLING BEYOND ITS NORMAL OPEN POSITION TO PREVENT DISTORTION OF THE COUPLING. THIS DISTORTION CAN CAUSE AN INEFFECTIVE SEAL OR RUPTURE THE METAL WHICH CAN RESULT IN FAILURE OF THE COUPLING AND EXHAUST GAS LEAKAGE.

CAUTION: INTERFACING FLANGES MUST BE ALIGNED CORRECTLY FOR THE COUPLING INSTALLATION TO ENSURE MAXIMUM SEALING.

CAUTION: THE V-BAND COUPLING AT THE TURBOCHARGER EXHAUST FLANGE MUST BE CORRECTLY ALIGNED TO THE TAILPIPE FLANGE. DO USE THE COUPLING TO BRING THE EXHAUST SYSTEM COMPONENTS INTO ALIGNMENT. INCORRECT ALIGNMENT OF THE COUPLING IS AN INDICATION THAT THE EXHAUST SYSTEM IS NOT CORRECTLY INSTALLED. IF THE COUPLING DOES NOT ALGIN, ADJUST THE EXHAUST SYSTEM COMPONENTS UNTIL THE COUPLING IS IN CORRECT ALIGNMENT. A SLIGHT ADJUSTMENT TO THE TURBOCHARGER ORIENTATION MAY ALSO PERMIT CORRECT COUPLING ALIGNMENT.

NOTE: Step 1 below is intended to aid visual inspection of the spot welds during an intermediate inspection routine, such as a pre-flight inspection and during subsequent 100 hour/annual inspections.

1 Position the v-band coupling (1) to facilitate visual inspections of the spot welds (Figure 13-8.5).

CAUTION: USE OF POWERED TOOLS FOR INSTALLING THE NUT IS NOT RECOMMENDED. HOWEVER, IF USING A POWERED DEVICE TO INSTALL THE NUT, DO NOT INSTALL AT GREATER THAN 120 RPM. EXCESSIVE NUT INSTALLATION SPEED CAN CAUSE THREAD DAMAGE AND INCORRECT FINAL TORQUE.

UNCONTROLLED COPY WHEN DOWNLOADED OR PRINTED

Visit www.enstromhelicopter.com for instructions to order an original manual and to register for email notification of updates.

2 Engage the t-bolt on the v-band coupling and press the coupling over the flanges.

3 Using a torque indicator wrench, tighten the nut to approximately 50 in-lb/5.6 N/m (70% of the maximum torque (70 in-lb/7.9 Nm)).

CAUTION: TO PREVENT DAMAGE, APPLY A LIGHT TAPPING FORCE PERPENDICULAR TO THE V-BAND COUPLING CIRCUMFERENCE – NOT TO THE EDGE OF THE COUPLING.

4 If possible, lightly tap the outer periphery of the coupling band in several places perpendicular to the circumference using a soft rubber mallet and a plastic drift (if required) to ensure proper seating and to distribute band tension. Do not tap in such a way that causes deformation.

NOTE: It may require approximately 10-15 tap and torque repetitions to achieve a stabilized torque reading.

5 Ensure there a no gaps at other exhaust system connections and all exhaust system components are correctly aligned before the final torque of all exhaust system hardware.

6 Ensure the turbocharger exhaust exit flange and exhaust tailpipe flanges are aligned.

7 Tighten the nut the maximum required torque (70 in-lb/7.9 Nm).

CAUTION: DO NOT OVER-TORQUE IN AN ATTEMPT TO ACHIEVE PROPER FIT OF EXHAUST SYSTEM COMPONENTS. IF AT 100% TORQUE, TAILPIPE FIT IS INCORRECT, DISASSEMBLE THE EXHAUST SYSTEM AS REQUIRED TO DETERMINE THE CAUSE AND CORRECT IT PRIOR TO PROCEEDING.

8 Repeat as in steps 3 through 8 until the torque reading stabilizes. Do **NOT** overtorque.

9 Safety wire v-band coupling (1) using two twisted wraps of MS20995C32 safety wire.

(14) Torque two turbocharger mount bolts (16) (100-140 in-lb/11.3-15.8 Nm).

(15) If required, torque lower engine turbocharger mount bracket bolts (40-50 in-lb/4.5-5.6 Nm) and safety to hole flange.

(16) Torque injector outlet attaching bolts (10) (100-140 in-lb/11.3-15.8 Nm) and safety (MS20995C32).

(17) If required, torque turbo center divider clamp (20) (20 in-lb/2.3 Nm) and safety (MS20995C32).

UNCONTROLLED COPY WHEN DOWNLOADED OR PRINTED

Visit www.enstromhelicopter.com for instructions to order an original manual and to register for email notification of updates.

(18) Connect oil inlet line (18).

NOTE: Ensure that check valve (23) located in the oil inlet line has arrow pointing toward turbocharger.

(19) Connect oil outlet line (8).

NOTE: It is recommended to fill the turbocharger with oil before connecting the line.

(20) Inspect all areas prior to closure of the engine compartment and flight check.

CAUTION: WHEN INSTALLING A NEW OR OVERHAULED TURBOCHARGER AND BEFORE STARTING THE ENGINE. IT IS CRITICAL TO PRE-OIL THE TURBOCHARGER TO PREVENT DAMAGE TO THE TURBOCHARGER FROM A DRY START. REMOVE THE SPARK PLUGS FROM THE BOTTOM CYLINDERS AND RUN THE ENGINE ON THE STARTER WITH THE MAGS OFF UNTIL OIL PRESSURE IS OBSERVED ON THE OIL PRESSURE GAUGE. THEN REINSTALL THE SPARKPLUGS BEFORE ATTEMPTING TO START THE ENGINE.

NOTE: If a new v-band coupling is installed, update maintenance records to include a record of the coupling date of installation, the time-in-service of the new coupling, manufacturer, and part number.

(20) Check torque of all installations after initial engine run-up and cool-down. Re-safety (MS20995C32) as required.

(21) Recheck the torque on any new or re-installed v-band coupling after 25 hours time-in-service.

E. Turbocharger – Repair

Consult Hartzell Engine Technologies, or an authorized Hartzell/Rotomaster/Rajay turbocharger repair facility for information on turbocharger repair or overhaul.

NOTE: The following table is the legend for Figure 13-9, which is depicted on the following page.

Figure 13-9 Legend

1.	V-Band Coupling (Exhaust Outlet)	8.	Oil Outlet Line	17.	Shim
2.	Gasket	9.	Oil Outlet Elbow	18.	Oil Inlet Line
3.	Heat Shield	10.	Bolt	19.	Mount Bracket
4.	V-Band Coupling (Exhaust Inlet)	11.	Turbo Inlet Adapter	20.	Divider Clamp
5.	Exhaust Collar	12.	Mount Bracket	21.	Adapter
6.	Clamp	13.	Gasket	22.	O-ring
7.	Oil Inlet Nipple	14.	Screw	23.	Check Valve
		15.	Gasket	24.	Flexible Sleeve
		16.	Bolt		

UNCONTROLLED COPY WHEN DOWNLOADED OR PRINTED

Visit www.enstromhelicopter.com for instructions to order an original manual and to register for email notification of updates.

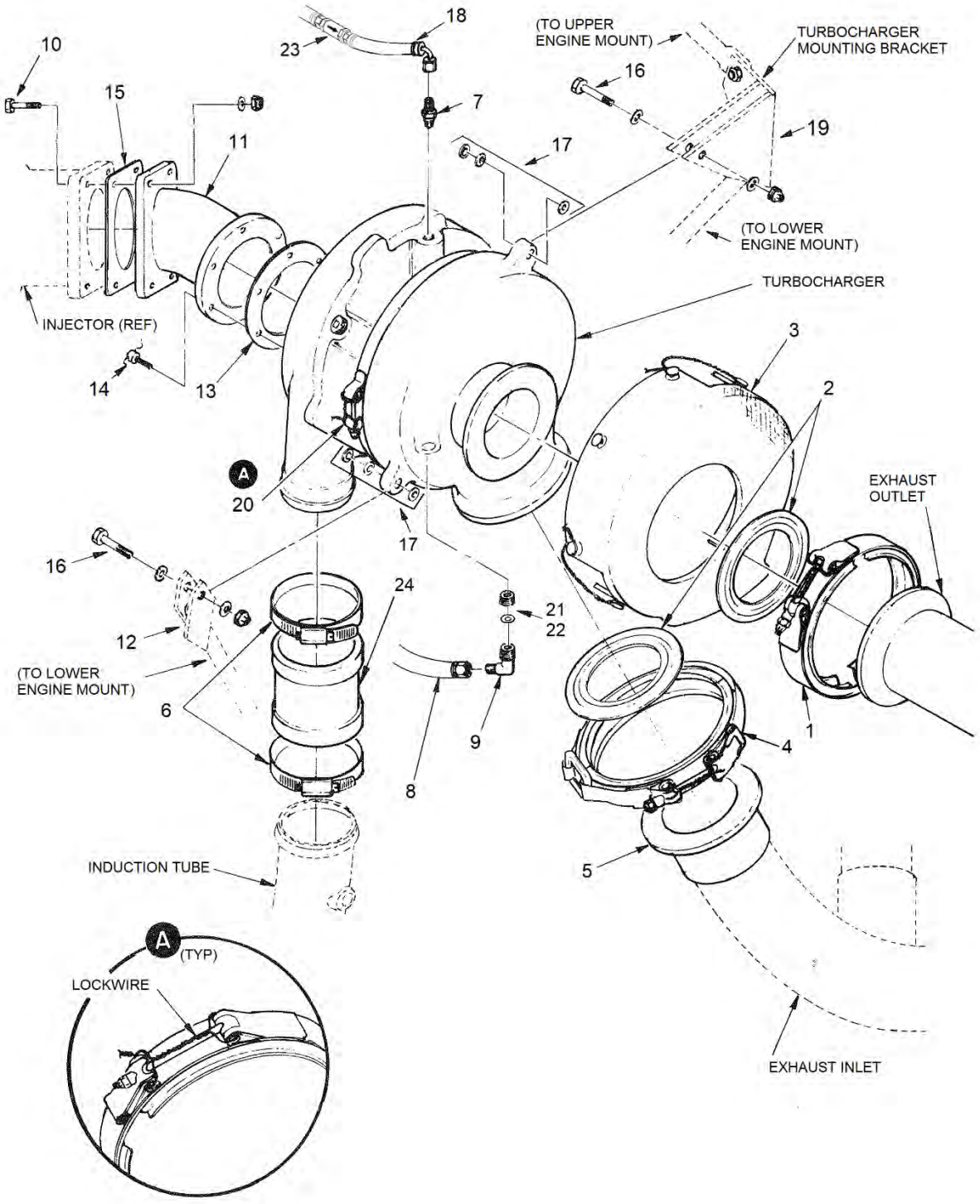

Figure 13-9. Turbocharger Installation

Visit www.enstromhelicopter.com for instructions to order an original manual and to register for email notification of updates.



Figure 13-9.1. Safety Installation (over the screw slot).

UNCONTROLLED COPY WHEN DOWNLOADED OR PRINTED

Visit www.enstromhelicopter.com for instructions to order an original manual and to register for email notification of updates.

13-6 TURBOCHARGER STATIC AIR PRESSURE SYSTEM

A. General Information

Installed in the static air system is a single, swing type, check valve which is vented to ambient air pressure on the filtered side of the inlet container. During starting, idling and manifold pressure up to ambient, this valve is open. The valve closes automatically when turbocharger compressor inlet pressure exceeds the existing ambient pressure. Pressurized air is now being furnished to the air bleed nozzle from a line connected to the induction inlet tube. Static pressure lines run to manifold pipes located above the rocker covers on each side of the engine. Flexible lines run from these manifolds to each cylinder nozzle to provide positive system pressure in all operating environments. (Refer to Figure 13-10 for the system schematic.)

B. Turbocharger Static Air Pressure System - Troubleshooting

Problem	Possible Cause	Action
Hard starting or will not start.	Ambient air check valve stuck closed or sticky.	Clean or replace valve.
	Dirt in nozzle.	Clean lines and nozzles.
	Dirt in air manifolds.	Disconnect lines and blow out static air manifolds.
Engine rough at idle and low power.	Ambient air check valve partially closed or sticky.	Clean or replace valve.
Excessive smoking at idle.	Ambient air check valve stuck closed or sticky.	Clean or replace valve.
Excessive EGT at high power.	Ambient air check valve stuck open.	Clean or replace valve.
Engine quits with power reductions at high density altitude.	Ambient air check valve stuck closed or sticky.	Clean or replace valve.

C. Ambient Air Check Valve

(1) Ambient Air Check Valve - Removal

(a) Disconnect inlet and outlet lines at the ends of the valve. Observe airflow marking on valve case for correct installation.

(2) Ambient Air Check Valve – Disassembly

(a) Remove "hinge" end of valve (marked on hex flat) by locking opposite end in vise and loosening hinge end with a wrench.

(3) Ambient Air Check Valve – Cleaning

(a) Carefully clean inside surfaces and components with a clean, lint-free cloth and air.

(4) Ambient Air Check Valve - Installation

(a) Connect to inlet and outlet lines to allow "free flow" from the air inlet container to the static pressure lines.

UNCONTROLLED COPY WHEN DOWNLOADED OR PRINTED

Visit www.enstromhelicopter.com for instructions to order an original manual and to register for email notification of updates.

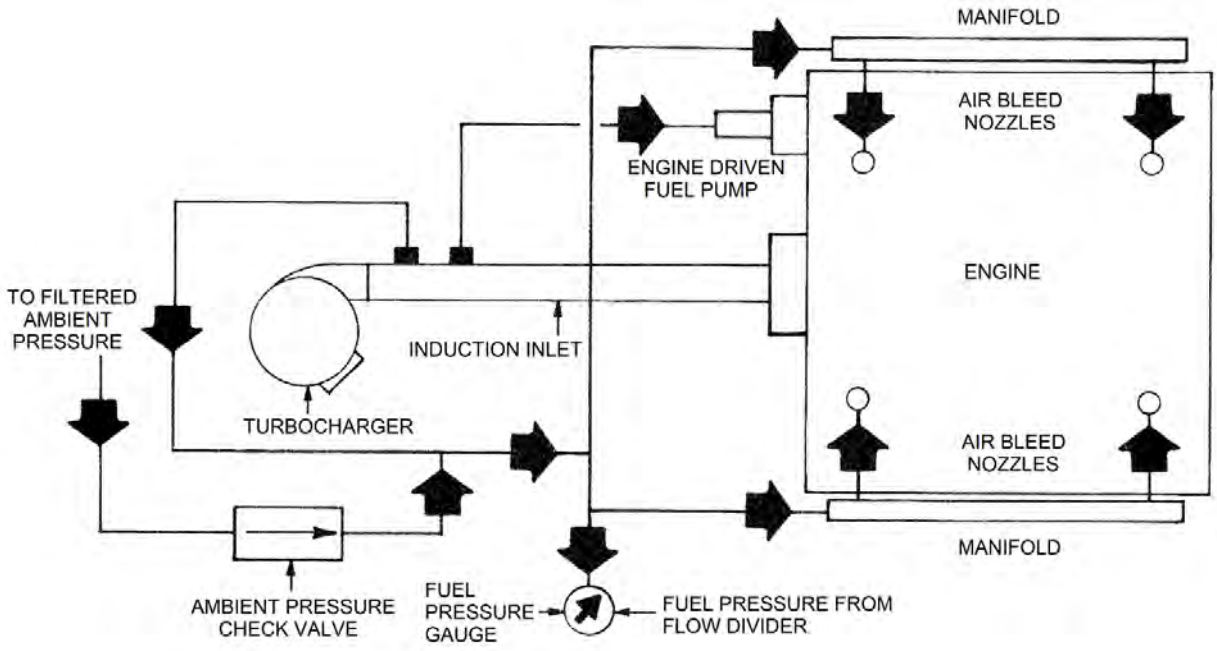

Figure 13-10. Turbocharger Static Pressure System

UNCONTROLLED COPY WHEN DOWNLOADED OR PRINTED

Visit www.enstromhelicopter.com for instructions to order an original manual and to register for email notification of updates.

13-7 PRIMARY AIRFLOW SYSTEM

A. General Information

Intake air is drawn in through the non-ram air scoop mounted on the right side of the aircraft. The intake air then passes through the air filter on its way to the injector. At the injector the air volume is metered in proper proportion to the fuel mixture that the engine requires. The metered air is drawn into the compressor impeller section of the turbocharger where it is compressed. This compressed air is forced into the intake manifolds where it is delivered to the various cylinders. After combustion, the exhaust gases are expelled out the exhaust ports and through the exhaust manifolds back to the turbocharger. The engine exhaust gases drive the turbocharger exhaust turbine wheel which drives the compressor impeller through a common rotating shaft. Exhaust gases are then dumped overboard through the exhaust outlet. A bypass, just before the turbocharger exhaust inlet, incorporates a wastegate which is mechanically linked to the throttle lever to regulate exhaust flow through the turbocharger for varying engine power requirements. Refer to Figure 13-11 for the system schematic.

B. Air Filter and Housing (Air Box)

(1) General Information

A polyurethane filter is utilized to remove all foreign material from the air before it enters the induction system. The filter is installed in a housing which also incorporates an alternate air door and back-fire bypass door. In the event of a filter blockage, due to ingested dirt or ice buildup, the spring-loaded alternate air door will open, allowing engine compartment air to be drawn into the injector. The back-fire bypass door prevents damage to the filter assembly and flexible intake hose by allowing back pressure, due to engine back-fire, to escape with minimal restriction. (Refer to Figure 13-12 for numbered items.)

NOTE: Review maintenance records to determine compliance with SDB 0129 for modifying the hinge pin on the backfire housing door.

(2) Filter Removal

Filter change is recommended every 100 hours. More frequent changes will be necessary for aircraft used for agricultural spraying, dusting, or operation in dusty areas.

(a) Remove air box cover (1).

(b) Remove filter retainer (2).

(c) Remove and discard filter (3).

(3) Filter Installation

NOTE: Clean air box and check for freedom of operation of the alternate air door (4) and back-fire door (5) before installing filter.

(a) Install filter (3) in air box (6).

(b) Install filter retainer with back-fire door (5) oriented to align with aft side of inlet hole in air box cover (1).

(c) Install air box cover (1).

UNCONTROLLED COPY WHEN DOWNLOADED OR PRINTED

Visit www.enstromhelicopter.com for instructions to order an original manual and to register for email notification of updates.

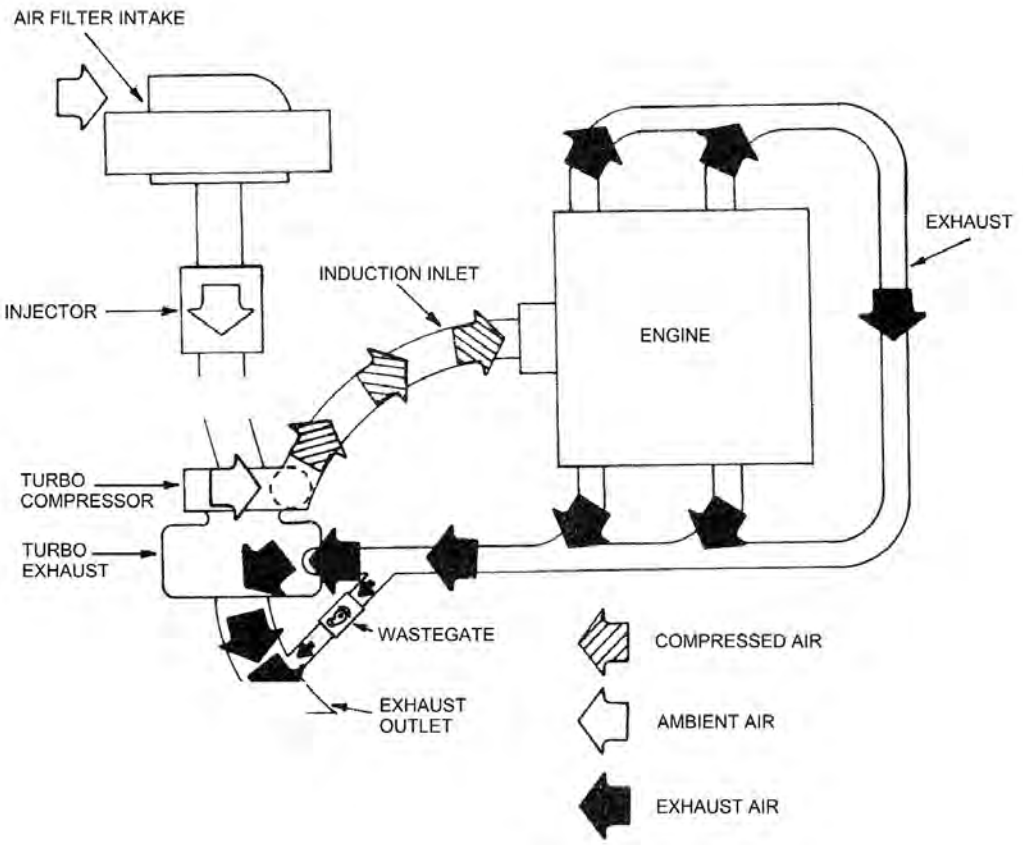

Figure 13-11. Primary Air Flow Schematic

UNCONTROLLED COPY WHEN DOWNLOADED OR PRINTED

Visit www.enstromhelicopter.com for instructions to order an original manual and to register for email notification of updates.

(4) Air Box Removal

NOTE: The housing is attached to the pylon and the firewall mount brackets with quarter-turn fasteners (14).

(a) Disconnect flexible intake hose (7) from air box.

(b) Disconnect static air (fuel nozzle vent) line (8) above hose.

(c) Disconnect unit from pylon mount bracket (9).

(d) Support air box and disconnect it from the firewall mount bracket (10).

(e) Lift unit from aircraft, allowing drain line (11) to pull through cowling.

(5) Air Box Installation

(a) Position unit in aircraft with drain line (11) going out through the lower side cowling.

(b) Secure unit to firewall mount bracket (10).

(c) Secure to pylon mount bracket (9).

(d) Connect static air line (8).

(e) Connect flexible intake hose (7).

(f) Ensure that the cowling (16) fits tightly against the airbox seal.

(g) Ensure that the airbox seal (15) is in good condition.

(h) Ensure that each end of the pin in the backfire door hinge has a minimum 30° bend (SDB 0129).

UNCONTROLLED COPY WHEN DOWNLOADED OR PRINTED

Visit www.enstromhelicopter.com for instructions to order an original manual and to register for email notification of updates.

C. Induction System Leak Check

WARNING: FAILURE TO ENSURE THAT THE MAGNETO SWITCH IS OFF COULD RESULT IN INJURY TO PERSONNEL.

(1) Ensure the magneto switch is off.

(2) Remove the access panels/cowling as required to access the engine cooling fan.

(3) Disconnect the spark plug lead from any one of the lower spark plugs on the engine and remove the spark plug.

(4) Carefully pull the engine through until the open cylinder is in the intake stroke.

(5) Install the spark plug hole adapter from a deferential compression test set into the open cylinder.

(6) Connect a shop air hose to the adapter and apply dry, filtered shop air to the cylinder. Do not exceed 80 psi/552 kPa pressure.

(7) Using a soapy water solution, check the following locations for leaks:

1 Engine induction tubes at the cylinders.

2 Engine induction tubes at the sump assembly.

3 Turbocharger outlet tube at sump assembly.

4 Turbocharger outlet tube at the turbocharger adapter collar.

5 Turbocharger inlet adapter to turbocharger.

6 Turbocharger inlet adapter to fuel servo/injector.

7 Engine fuel pump drain line and fitting at fuel pump and turbocharger outlet tube.

8 Static pressure line fitting at turbocharger outlet tube.

9 Sump vent at turbocharger outlet tube.

(8) Repair induction leaks as required.

UNCONTROLLED COPY WHEN DOWNLOADED OR PRINTED

Visit www.enstromhelicopter.com for instructions to order an original manual and to register for email notification of updates.

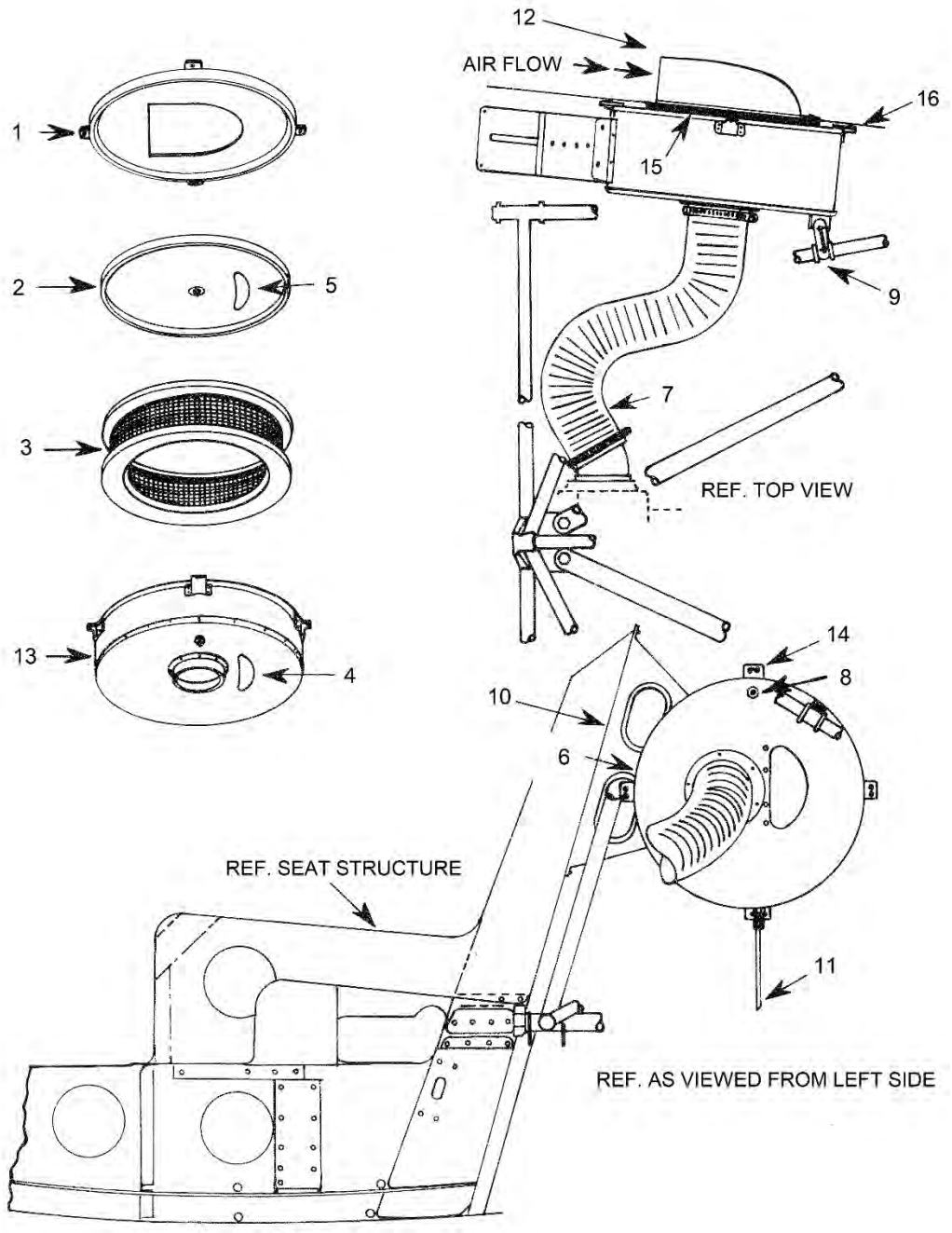

1. Air Box Cover
2. Filter Retainer
3. Filter
4. Alternate Air Door
5. Back-Fire Door
6. Air Box
7. Intake Flex Hose
8. Fuel Nozzle Vent Line
9. Pylon Mount Bracket
10. Firewall Mount Bracket
11. Drain Line
12. Air Scoop
13. Cover Assembly
14. Quarter-turn Fastener
15. Seal
16. Cowling

Figure 13-12. Filter – Primary Airflow System

UNCONTROLLED COPY WHEN DOWNLOADED OR PRINTED

Visit www.enstromhelicopter.com for instructions to order an original manual and to register for email notification of updates.

INTENTIONALLY LEFT BLANK

UNCONTROLLED COPY WHEN DOWNLOADED OR PRINTED

Visit www.enstromhelicopter.com for instructions to order an original manual and to register for email notification of updates.

13-8 COOLING SYSTEM

A. General Information

The cooling system consists of the fan assembly, shroud assembly, oil coolers and ducting. Outside air is drawn in by the fan and forced through the shroud assembly to provide cooling air flow to the engine and other components.

B. Fan Assembly

(1) Fan - Removal

(a) Remove aft cowling and baggage box.

(b) Remove idler pulley assembly.

(c) Remove jack strut and drive pulley.

(d) Remove fan.

NOTE: The fan, like the starter ring gear support, is designed to fit on the output flange of the engine in only one position. Marking a fan mount hole and its associated stud is suggested to ease installation.

(2) Fan - Disassembly

NOTE: Disassembly of the fan to replace blades requires that the fan be statically rebalanced prior to installation. Repair and balancing can be accomplished by Enstrom Helicopter Corporation or a maintenance facility equipped with tools specified in the Balancing Procedure.

(a) Mark blade ring and fan disc to show proper relationship for reassembly.

(b) Remove all nuts, bolts and washers attaching blade ring to fan disc.

NOTE: Check for elongation of bolt holes. Fan should be replaced if evidence of hole elongation exists.

(c) Discard used locknuts.

(d) Drill out rivets securing damaged blade(s).

(3) Fan - Reassembly

(a) Attach new fan blade(s) to blade ring with AN427M4-7 rivets.

(b) Align and attach blade ring to fan disc.

NOTE: Attach with AN3-6A bolts, one AN960-10L washer under each nut, and new AN364-1032 nuts.

(c) Balance fan.

(4) Fan - Balancing (See Figure 13-13)

UNCONTROLLED COPY WHEN DOWNLOADED OR PRINTED

Visit www.enstromhelicopter.com for instructions to order an original manual and to register for email notification of updates.

(a) Install balancing arbor (T-1900) to fan assembly.

(b) Place assembly on balancing stand and allow heavy side to settle to the bottom. Identify blade that is closest to the bottom.

(c) Remove bolts, nuts and washers from heavy side and replace with AN3-5A bolt, (2) AN960-10L washers, and a AN364-1032 nut and/or remove AN960-10L washers from light side and replace with AN960-10 washers as required for balancing.

NOTE: Not more than (3) AN960-10 washers may be used per bolt for balancing.

Fan blade should balance in any position with blade drift not exceeding one inch in five seconds from any check position.

(d) Torque all nuts.

(5) Fan - Installation

(a) Align and install fan on engine output flange.

NOTE: Ensure .125” thick shim is installed on output flange before installing fan.

(b) Install jack strut and lower drive pulley.

UNCONTROLLED COPY WHEN DOWNLOADED OR PRINTED

Visit www.enstromhelicopter.com for instructions to order an original manual and to register for email notification of updates.

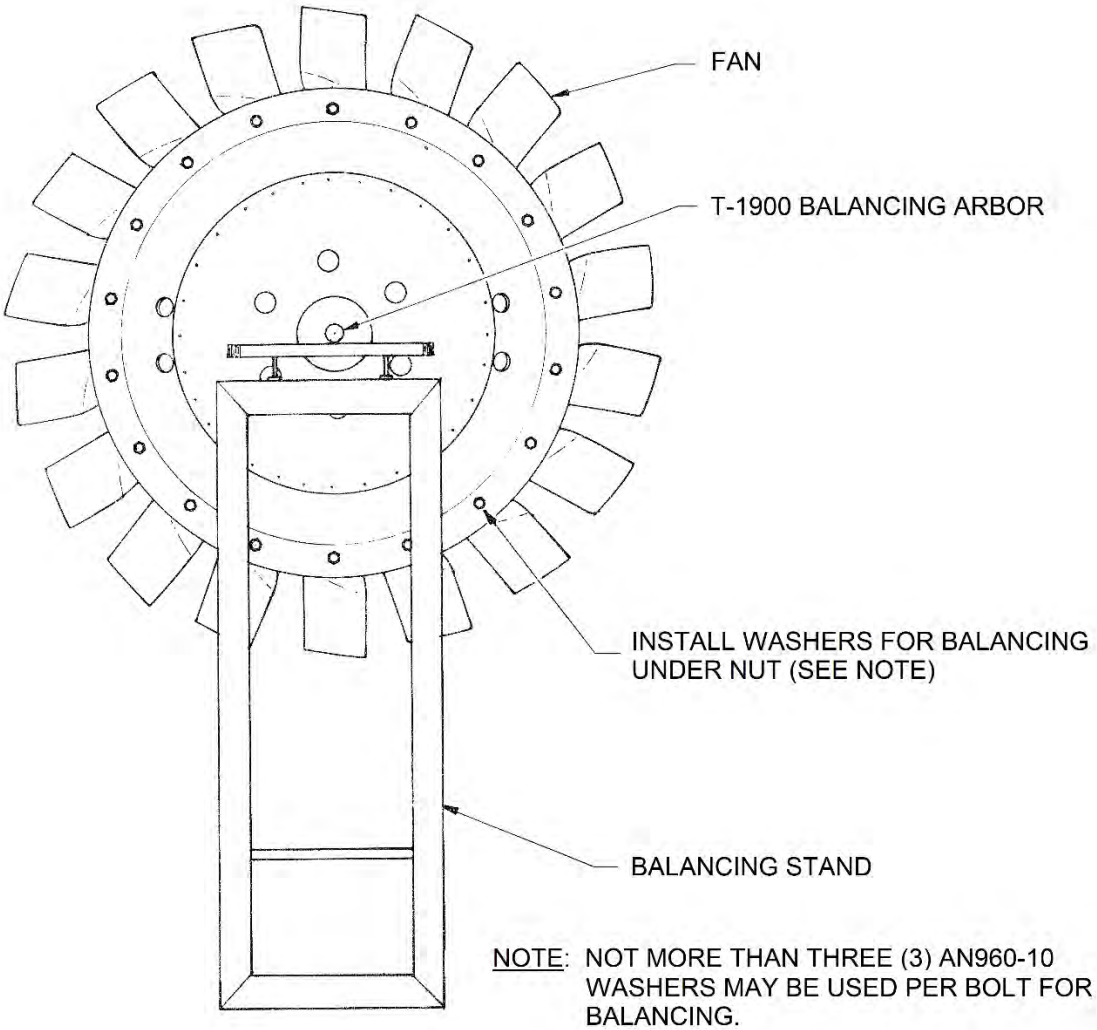

Figure 13-13. Fan Balancing

UNCONTROLLED COPY WHEN DOWNLOADED OR PRINTED

Visit www.enstromhelicopter.com for instructions to order an original manual and to register for email notification of updates.

(c) Install idler pulley assembly.

(d) Slowly rotate fan to check for proper fan to shroud clearance. Adjust shroud as necessary.

(e) Run engine to check belt tracking and fan operation.

(f) Install baggage box and cowling.

C. Fan Shroud

(1) Fan Shroud - Removal

(a) Remove aft cowling and cowling from both sides.

(b) Remove baggage compartment.

(c) Remove idler pulley assembly.

(d) Remove jack strut and drive pulley.

(e) Remove fan assembly.

(f) Remove shim, starter ring gear and alternator drive belt.

(g) Disconnect lines and drain oil from auxiliary oil cooler.

NOTE: Raise lines as they are disconnected to prevent drainage of oil from lines and primary oil cooler.

(h) Remove auxiliary oil cooler.

(i) Disconnect shroud from bracket attaching it to the bottom of the engine.

(j) Disconnect flexible duct to heater muff.

(k) Remove two lower panels from the front of the shroud assembly.

(l) Disconnect alternator from belt tension adjustment bracket and remove bracket.

(m) Remove fasteners attaching fan shroud to fire curtain and top and side engine baffling.

(n) Disconnect air deflection vanes.

(o) Remove air deflection vanes.

(p) Remove fan shroud assembly by pulling it aft and tipping it as necessary to clear pylon.

UNCONTROLLED COPY WHEN DOWNLOADED OR PRINTED

Visit www.enstromhelicopter.com for instructions to order an original manual and to register for email notification of updates.

(2) Fan Shroud – Installation

NOTE: Use tool T-0204 or install small wood wedges between the fan blade tips and the fan shroud to maintain alignment while connecting the baffles.

(a) Position fan shroud in engine compartment and loosely attach it to the top engine bracket and side baffling.

(b) Temporarily install the fan to align shroud and tighten fasteners.

(c) Install air deflection vanes.

(d) Install two lower panels on front of shroud assembly and attach lower engine shroud bracket.

(e) Attach fire curtain.

(f) Install belt tensioning bracket.

(g) Install auxiliary oil cooler.

(h) Seal holes where leakage may occur with fire barrier sealant CP 25WB+ (3M) or equivalent.

(i) Connect flexible duct to heater muff.

(j) Connect lines to primary oil cooler.

(k) Install alternator drive belt and starter ring gear.

(l) Check alternator belt tension and adjust if necessary.

(m) Check shroud foam tape and replace if necessary.

(n) Install shim and fan assembly.

(o) Install drive pulley and jack strut.

(p) Install idler pulley assembly.

(q) Check engine oil level and replace oil removed with oil cooler.

(r) Run engine to check fan clearance and belt tracking.

(3) Foam Tape – Installation

(a) Remove all tape from the fan shroud and check fan blade to shroud clearance. Adjust if necessary.

NOTE: If significant amounts of tape were missing, check oil coolers for partial obstruction by tape fragments.

UNCONTROLLED COPY WHEN DOWNLOADED OR PRINTED

Visit www.enstromhelicopter.com for instructions to order an original manual and to register for email notification of updates.

NOTE: The fan shroud must be clean and free of residue for the new tape to adhere. Use a plastic scraper and stripper (acetone, toluene, or equivalent solvent) to remove all adhesive residue. Use Scotch Brite to clean the aluminum thoroughly. Then using clean cloths or rags wetted with acetone, toluene, or equivalent solvent, wipe out residue until cleaning cloths are free of residue.

(b) Remove all grease, oil, and contaminants from area to be tapped by cleaning with solvent. Avoid finger prints on cleaned area.

(c) Cut end of foam tape at approximately 45° angle.

(d) Install tape and cut finishing end to match.

NOTE: Using a gentle application of heat may help facilitate the tape installation.

CAUTION: UPON INITIAL RUNNING OF THE ENGINE, IT IS NECESSARY TO CLEAN OIL COOLER AIR PASSAGES OF FOAM TAPE PARTICLES SHEARED OFF BY THE FAN.

D. Firewall Repairs

NOTE: Refer to Figure 13-14 for the following repair instructions.

NOTE: All openings in the firewall in excess of 1/32 inch/0.8 mm are to be repaired. Small openings, such as around pylon tubes, may be caulked with CP 25WB+ (3M) or equivalent sealant. Fire curtains requiring extensive repairs should be replaced.

(1) Clean area of repair with acetone.

(2) Holes up to 1/4 inch/6.4 mm in stainless steel cabin firewall:

(a) Caulk with fire barrier sealant CP 25WB+ (3M) or equivalent.

(3) Holes up to 1 inch in fabric (see Figure 13-14 A):

(a) Form (2) round patches of 0.015 thick stainless steel, allowing 1/2 inch/13 mm overlap on all sides of existing hole.

(b) Drill 0.015 inch diameter hole in center of both patches.

(c) Coat one side of each patch with fire barrier sealant CP 25WB+ (3M) or equivalent.

(d) Place one patch of each side of fabric hole with fire barrier sealant CP 25WB+ (3M) or equivalent against the fabric.

(e) Fasten patches over the hole with (1) AN525-6R6 screw, (1) AN960-6L washer, and (1) AN364-632 nut.

(4) Areas of worn fabric around pylon tubes or cables (see Figure 13-14 B):

(a) Cut a patch of firewall curtain (or equivalent) to cover 1/2 inch/13 mm to 3/4 inch/19 mm beyond the damaged area.

(b) Coat one side of patch with fire barrier sealant CP 25WB+ (3M) or equivalent.

UNCONTROLLED COPY WHEN DOWNLOADED OR PRINTED

Visit www.enstromhelicopter.com for instructions to order an original manual and to register for email notification of updates.

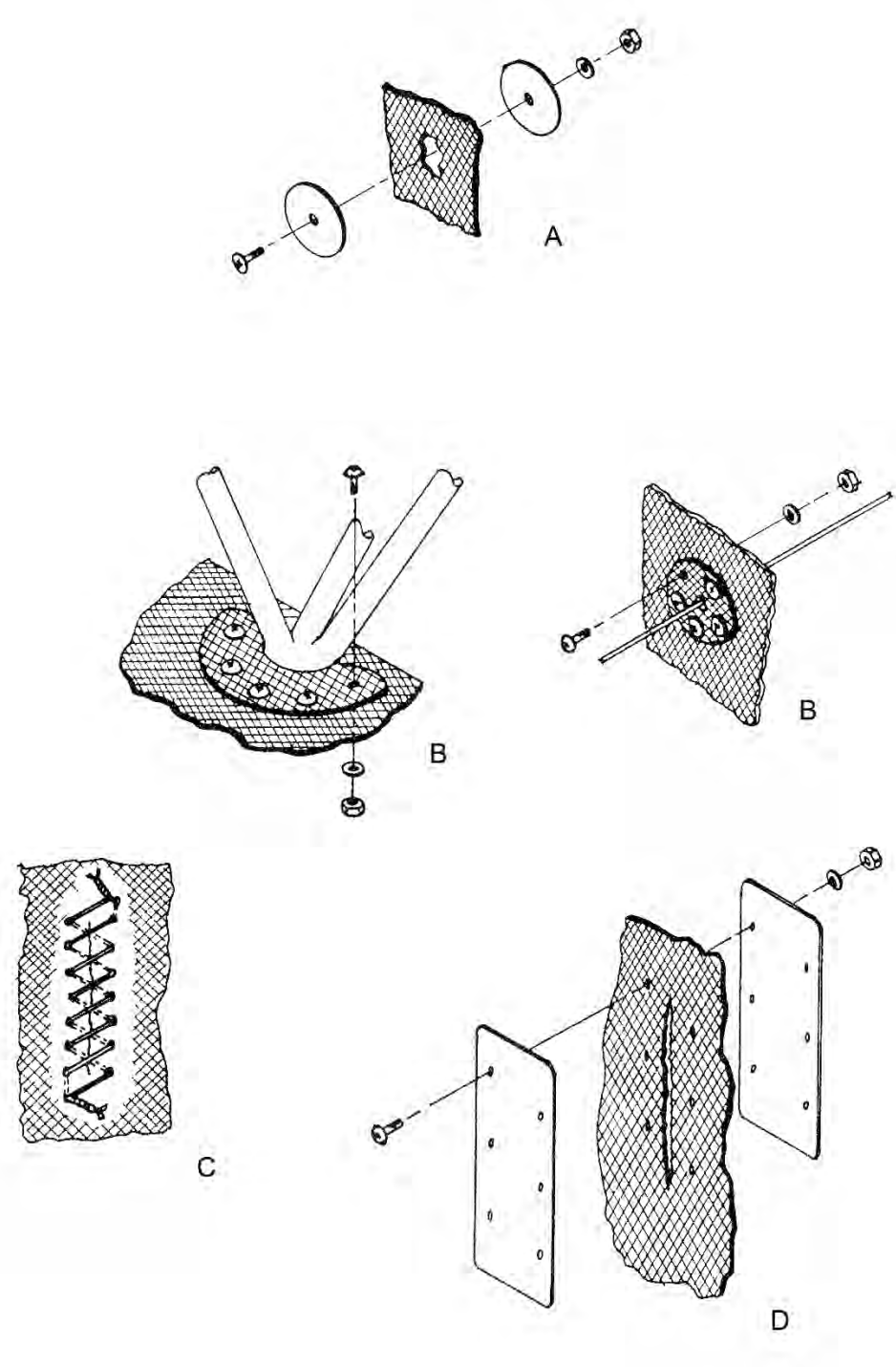

Figure 13-14. Standard Fire Curtain Repair Procedure

UNCONTROLLED COPY WHEN DOWNLOADED OR PRINTED

Visit www.enstromhelicopter.com for instructions to order an original manual and to register for email notification of updates.

(c) Apply patch, sealant side against fabric.

(d) Attach patch with AN525-6R6 screws, AN960-6L washers, and AN364-632 nuts at 3/4 inch/19 mm to 1 inch/25 mm spacing.

(e) Seal nonessential gaps (around pylon tubes, etc.) with fire barrier sealant CP 25WB+ (3M) or equivalent.

(5) Tears in fabric material which are less than 3 inch/7.6 cm in length (Figure 13-14 C):

(a) Lace damaged area together with .020-inch stainless steel safety wire.

(b) Apply sealant to repaired area on the side away from the engine compartment.

(6) Tears in fabric material in excess of 3 inches/7.6 cm in length:

(a) Cut two 1-inch/25 mm wide strips of .015-inch stainless steel to a length allowing for 1/2 inch/13 mm overlap at each end of the repair (Figure13-14, D)

(b) Drill .150-inch (approximate) diameter holes, space 1 inch/25 mm apart diagonally.

(c) Apply patch, sealant side against fabric.

(d) Attach patch, sealant sides against fabric, with AN525-6R6 screws, AN960-6L washers, and AN364-632 nuts.

13-9 IGNITION SYSTEM

A. General Information

The D-3200 ignition system consists of a dual magneto which features two electrically independent ignition circuits in one housing, a harness assembly, starting vibrator (for shower of sparks starting system), and the magneto switch.

At low cranking speed of the engine the vibrator provides the high voltage spark necessary to fire the plug. The vibrator provides interrupted battery current to the primary coil of the magneto where it is stepped up by transformer action, producing a shower of sparks which is directed to the spark plugs through the retard points located in the left magneto. Detailed operation, installation and service instruction may be found in Bendix Operational Manual No. L-928 and Overhaul Manual No. L-945.

B. Ignition System - Troubleshooting

NOTE: Reference information found in Bendix Installation, Operating and Maintenance Instructions Manual L-928.

UNCONTROLLED COPY WHEN DOWNLOADED OR PRINTED

Visit www.enstromhelicopter.com for instructions to order an original manual and to register for email notification of updates.

Problem	Possible Cause	Action
Hard starting.	Low voltage at vibrator input (9.5 volts minimum on 12 volt systems, measured between vibrator “IN” and ground terminal with starter engaged).	Check and change or replace battery as required. Use of an auxiliary power unit is recommended for cold weather starts.
		Check all electrical grounds and connections for corrosion or looseness.
	Inoperative vibrator (no buzzing audible when starter is engaged).	Check – ground and power in.
		Replace vibrator.
	Incorrect vibrator point gap.	.025” ± .005” gap
	Retard points opening too late.	Check timing of retard points (Para. 13-9, E, (2)).
Starting upon release of starter button.	Retard timing set too far advanced	Check timing of retard points (Para. 13-9, E, (2)).
	Rubber retard terminal P-insulator installed.	Replace rubber P-lead insulator (Para. 13-9, E, (3)).
Engine kicks back during starting.	Open retard circuit. Engine fires only in its normal advance position.	Check continuity (10 ohms or less) between LR terminal of the vibrator to nearest paint-free ground. If circuit is open, retard contact spring in magneto may not be making contact.
	Retard points not closing due to incorrect adjustment.	Check and adjust retard points as necessary.
	Poor electrical connection.	Check connections at vibrator and magneto.
	Internal relay in vibrator unit not functioning.	Replace vibrator assembly.
	Magneto incorrectly timed to the engine.	Check magneto to engine timing (Para. 13-9, E, (2))
	Magneto internal timing incorrect.	Check magneto timing (Para. 13-9, E, (2)).

UNCONTROLLED COPY WHEN DOWNLOADED OR PRINTED

Visit www.enstromhelicopter.com for instructions to order an original manual and to register for email notification of updates.

Problem	Possible Cause	Action
Engine roughness.	Fouled or defective spark plugs.	Clean or replace spark plugs
	Defective spark plug leads.	Check plug leads for continuity and break-down.
	Arcing in distributor.	Check distributor block for moisture and carbon tracking.
	Eroded or compressed distributor block contact spring(s).	Check contact springs in distributor block.
	Burned magneto contacts.	Check magneto contact assemblies for burring or dirt.
Excessive magneto drop on rpm check.	Magneto to engine timing incorrect.	Adjust timing.
	Incorrect contact adjustment.	Inspect contact assemblies for proper opening.
	One or more cylinders misfiring.	Check plugs and leads.

C. Vibrator/Magneto Check

(1) Method 1 – Vibrator/Magneto Check:

(a) Disconnect starter input wire to prevent engine from turning during this check.

(b) Turn engine in direction of normal rotation to bring number one cylinder to top dead center on its compression stroke.

(c) Check to ensure retard points have opened.

(d) Hold No. 1 cylinder top plug wire 3/16 inch/4.8 mm from ground.

(e) Turn magneto switch to BOTH.

(f) Depress starter button.

NOTE: A steady spark should be visible between the plug wire and ground. A weak or missing spark indicates possible faulty vibrator, electrical connection, or magneto internal timing.

(g) Release the starter button.

(h) Turn the magneto switch to OFF.

(i) Check the system, replace, or adjust components as necessary.

(j) Repeat checking procedure before reconnecting the starter.

UNCONTROLLED COPY WHEN DOWNLOADED OR PRINTED

Visit www.enstromhelicopter.com for instructions to order an original manual and to register for email notification of updates.

(2) Method 2 – Vibrator/Magneto Check:

(a) Remove the top spark plugs.

(b) Re-attach #1 spark plug to its ignition wire and lay it on top of the cylinder so it can be observed while turning the fan.

(c) Remove the wires from the starter.

(d) With mags on BOTH, master ON, ignition ON, hold the starter switch down, and listen for buzzing from the vibrator.

(e) Pull the engine through in the direction of rotation using the fan until the #1 spark plug starts to fire.

(f) Immediately stop turning and observe where the timing mark is on the starter. (It should be 1/2 tooth on the ring gear after top dead center.)

(g) If the spark plug does not fire after the engine has been rotated through all four cylinders, and if the vibrator can be heard buzzing, remove the magneto cover and investigate the cause.

(h) If the magneto is off time, remove the magneto cover and investigate the retard contactor timing.

D. Magneto Operation Check

(1) Start the engine and engage the rotor.

NOTE: Maintain rotor in flat pitch during the following procedure.

(2) Advance the throttle to 1800 rpm and allow cylinder head temperature to reach 200°F.

(3) Slowly advance the throttle to 2300 rpm and allow oil temperatures to reach 80°F.

(4) Advance the throttle to 3050 rpm.

(5) Check manifold pressure; 17-19 inches.

(6) Check fuel flow; 60-80 lb/hr.

(7) Turn the magneto switch from BOTH to L (left magneto) position. Note rpm drop (125 rpm max.) and EGT rise (100°F max.) in 5 seconds.

(8) Return the switch to BOTH position and allow rpm to stabilize.

(9) Turn the magneto switch from BOTH to R (right magneto) position. Note rpm drop (125 rpm max.) and EGT rise (100° F max.) in 5 seconds.

NOTE: Maximum permissible rpm differential between left and right magnetos is 50 rpm without engine roughness. A differential of greater than 50 rpm or a drop in rpm greater than 125 rpm may indicate spark plug, spark plug lead wire, or magneto problems. An EGT rise in excess of 100°F, while operating either in L or R position of the magneto switch indicates a magneto timing problem.

UNCONTROLLED COPY WHEN DOWNLOADED OR PRINTED

Visit www.enstromhelicopter.com for instructions to order an original manual and to register for email notification of updates.

(10) Return the switch to BOTH position and allow rpm and EGT to stabilize prior to engine shutdown.

E. Magneto

(1) Magneto – Removal

(a) Remove the magneto cover.

(b) Remove nuts and washers from the magneto mounting clamp studs.

(c) Pull the flow divider fuel line bracket forward to clear the stud and rotate the bracket and clamp upwards to allow clearance for magneto clamp removal.

(d) Remove the magneto and clamps.

(2) Magneto Installation and Timing to the Engine

NOTE: Refer to Enstrom Tech Tip, Magneto Maintenance, for additional information regarding magneto installation before proceeding.

NOTE: Remove bottom spark plugs for ease of turning over engine.

NOTE: Refer to the maintenance records to check compliance with SIL 0189. If there is no record of compliance, inspect for a rubber P-lead insulator prior to performing the timing procedure. Refer to step (3) for inspection and replacement of the P-lead insulator, if necessary.

(a) Remove the bottom spark plugs.

(b) Remove the plastic viewing plug from the left side of the magneto. Ensure that the other three plugs are installed and that the vented plug(s) is not in the top.

(c) Turn the magneto drive shaft in the direction of normal rotation until the chamfered tooth on the distributor gear is visible in the timing hole and the “C” printed on the rotating magnet is aligned with the cast marker on the inside of the magneto housing.

NOTE: Observe at this time that the pointer in the rotor viewing window aligns with the “L” marked on the rotor. If internal timing of the magneto is required, refer to the Enstrom Tech Tip or Bendix Operation and Maintenance Manual No. L-928.

(d) Set engine No. 1 cylinder at 21.5° +0.05/-0 BTDC (align mark on the starter ring gear with the mark on the starter housing) on its compression stroke (see Figure 13-15).

(e) Maintain magneto No. 1 firing position (chamfered tooth visible in the hole and pointer aligned with “C” on the rotor).

NOTE: Ensure the flow divider fuel line support bracket is placed on the magneto mount stud before the nut and washer are installed.

(f) Install the magneto to the engine. Install the clamps, new lock washers, nuts, and the flow divider fuel line bracket. Tighten the nuts finger tight so that the magneto can be moved for final timing to the engine.

UNCONTROLLED COPY WHEN DOWNLOADED OR PRINTED

Visit www.enstromhelicopter.com for instructions to order an original manual and to register for email notification of updates.

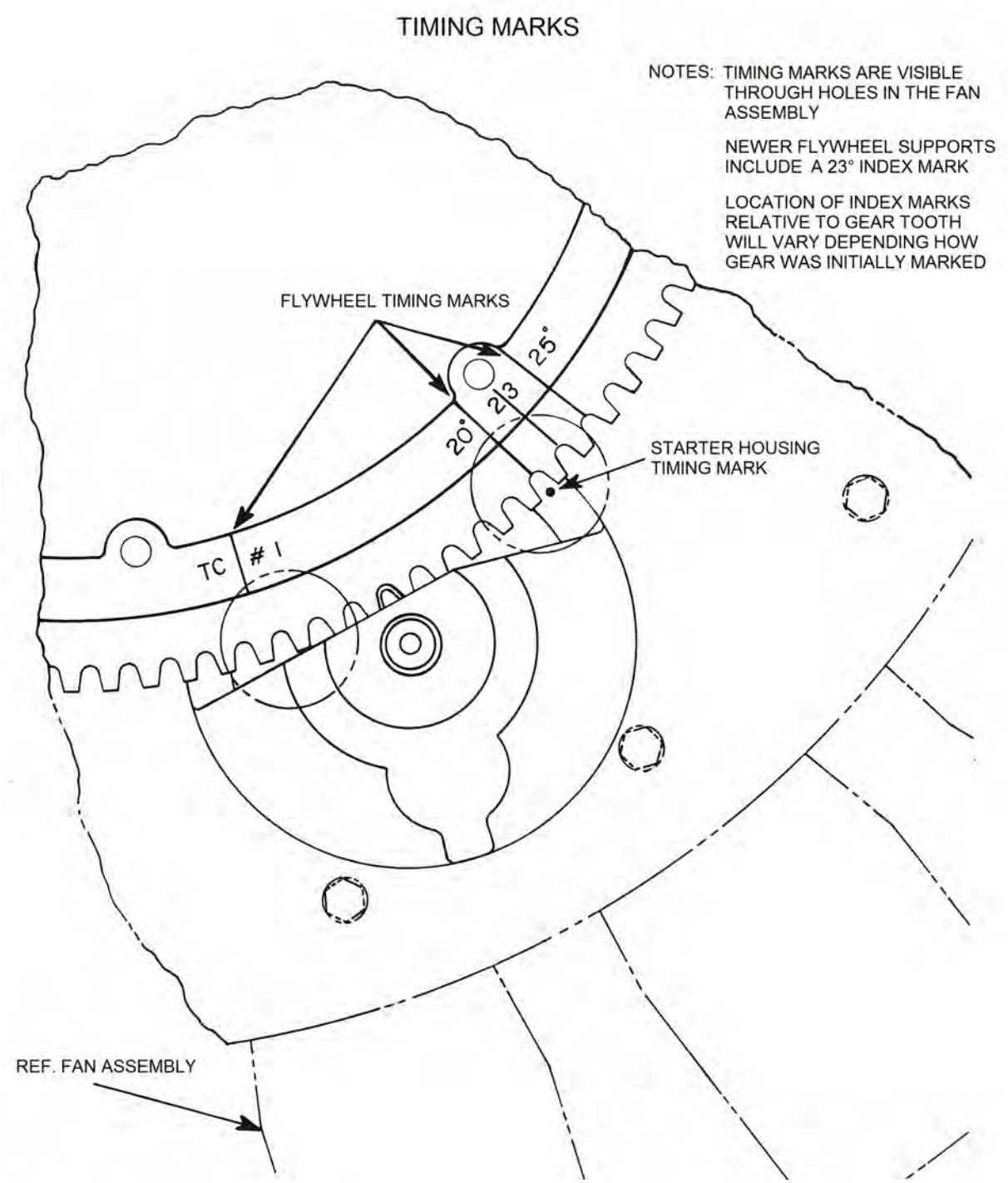

Figure 13-15

Visit www.enstromhelicopter.com for instructions to order an original manual and to register for email notification of updates.

(g) Attach the “P” lead wires from the magneto timing light to each “P” lead, black lead to ground.

(h) Turn the entire magneto in the direction of rotor rotation until the timing light indicates the contacts (points) have closed.

(i) Rotate the magneto in the opposite direction until the first set of contacts opens.

(j) Tighten the magneto clamps and install the plug in the viewing hole.

(k) Back the engine up approximately 20° to 30° and then carefully bump the engine forward while observing the timing light.

(l) At the No. 1 firing position (21.5° BTDC), the first contact should open. The second contact should open within +0.5 / -1.5° of the first contact.

NOTE: Each tooth of the starter ring gear is approximately 2°.

(m) Torque the magneto hold-down nuts to 17 ft-lb (23 Nm)

(n) Disconnect the timing light leads from the “P” leads and reconnect one to the retard breaker terminal.

(o) Rotate the crankshaft to bring No. 1 cylinder to half tooth (1°) on the ring gear after TDC.

NOTE: The timing light should go out at a half tooth after TDC indicating the retard points have opened.

(p) Loosen the retard cam securing screw and adjust the cam, as necessary, to achieve correct timing.

(q) Retorque the cam securing screw to 16-20 in-lb/1.8-2.3 Nm.

(r) Back the engine off 20° to 30° and bump it forward again until the timing light goes out. Check the timing mark on the starter ring gear to ensure the crankshaft is at half tooth in the ring gear after TDC (1° crankshaft rotation after TDC). Adjust the retard cam as necessary.

(s) Remove the timing light leads.

(t) Install the magneto cover. Torque the screws to 30-35 in-lb (3.4-4.0 Nm).

(u) Install the “P” leads.

NOTE: It is important that the retard P lead slides freely within the magneto cover to ensure that the P lead makes an electrical connection with the retard points (contactor) inside the magneto.

NOTE: Is it possible to distort the retard points (copper contactor tang) when installing the cover; thus, it is important to check that the retard P lead is actually contacting the retard points during installation of the P lead. When installing the retard P lead, and before the coupling nut is installed, push the P lead insulator into the magneto cover and ensure that the contactor inside the magneto is touching and pushes the insulator back out a small amount.

UNCONTROLLED COPY WHEN DOWNLOADED OR PRINTED

Visit www.enstromhelicopter.com for instructions to order an original manual and to register for email notification of updates.

(v) Install the bottom spark plugs and torque in accordance with Lycoming specifications (30-35 ft-lb/40.7-47.5 Nm).

(3) Magneto Retard Terminal P-Lead Insulator

NOTE: The following procedure is applicable to aircraft that have not complied with SIL 0189 and are eligible per the serial number effectivity provided in the SIL. The procedure inspects for a soft retard terminal P-lead insulator and if installed, replaces it with a phenolic bushing. The bushing is P/N 10-157212 and is available in kit P/N 10-157208.

NOTE: The retard contact inside the magneto is designed to contact the inside of the cover when the P-lead is removed from the magneto to deactivate the shower of sparks system. It is important that the retard P-lead slides freely within the magneto cover to ensure that the P-lead makes an electrical connection with the retard points (contactor) inside the magneto.

(a) Remove seat cushions and the access panel in the seat back, if not already removed.

(b) Remove the co-pilot side firewall access panel.

(c) Identify the retard circuit P-lead.

(d) Remove the retard P-lead from the magneto cover and determine if the P-lead insulator is the soft rubber insulator or the hard phenolic bushing. If the insulator is rubber, proceed to step (e). If the insulator is the phenolic bushing, proceed to step (i).

NOTE: If the aircraft has a phenolic insulator and has been starting when the starter button is released, set the magneto retard timing per Para. 13-9, E, (2), (n).

(e) Cut the P-lead wire about 2 inch/51 mm from the terminal.

CAUTION: THE MAGNETO RETARD TERMINAL BUSHING (P/N 10-157212) IS SIMILAR TO RIGHT AND LEFT P-LEAD CONNECTION BUSHINGS (P/N 10-382697) BUT IS SHORTER IN LENGTH. ENSURE THE CORRECT BUSHING IS BEING INSTALLED ON THE RETARD TERMINAL P-LEAD WIRE. INSTALLING THE INCORRECT BUSHING WILL CAUSE IMPROPER MAGNETO OPERATION

(f) Slide the rubber P-lead insulator (P/N 10-382812) off of the wire and slide the phenolic insulated bushing (P/N 10-157212) onto the wire.

(g) Reconnect the P-lead wire with a butt connector (P/N AS-N-345) or equivalent.

(h) Install the P-lead back into the magneto.

NOTE: It is possible to distort the retard points copper contactor tang when installing the cover. It is important to check that the retard P-lead is contacting the retard points during installation of the P-lead. When installing the retard P-lead, and before the coupling nut is installed, push the P-lead insulator into the magneto cover and ensure that the contactor inside the magneto is touching and pushes the insulator back out a small amount.

(i) Reinstall the access panels and aircraft seat cushions upon completion of timing procedures.

UNCONTROLLED COPY WHEN DOWNLOADED OR PRINTED

Visit www.enstromhelicopter.com for instructions to order an original manual and to register for email notification of updates.

F. Harness Assembly

Ignition wires are routed from the left magneto to all the cylinder top spark plugs and those from the right magneto to all the cylinder bottom spark plugs. (Refer to Figure 13-16)

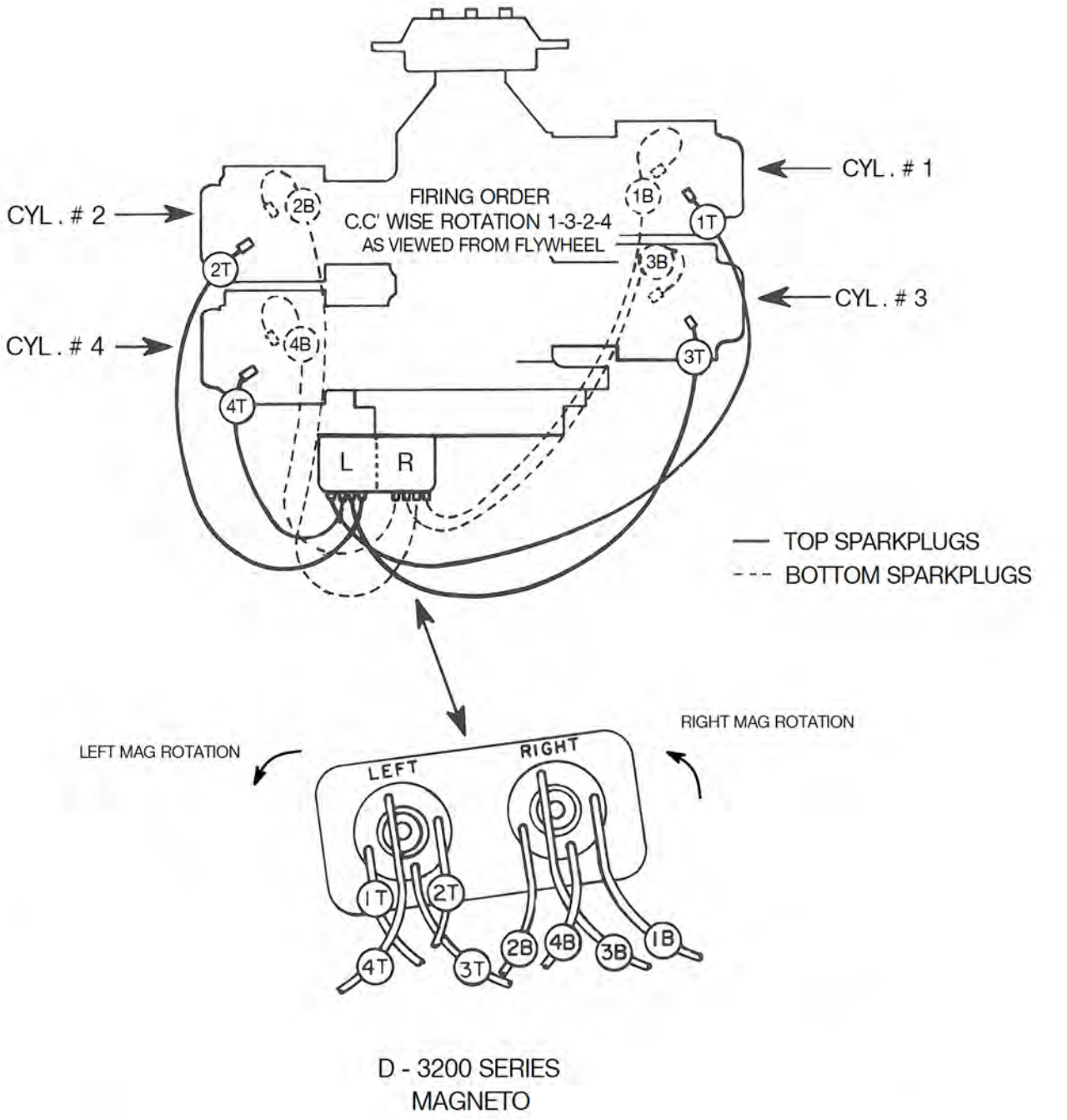

Figure 13-16. Ignition Wire Installation

Visit www.enstromhelicopter.com for instructions to order an original manual and to register for email notification of updates.

13-10 FUEL SYSTEM

A. General Information

The fuel system consists of the fuel tanks, fuel boost pump, valve, filter, fuel lines, engine driven fuel pump and fuel pressure switch. Fuel is gravity fed from the tanks through the shut-off valve, boost pump, filter, and fuel lines to the inlet side of the engine driven fuel pump. This fuel pump functions whenever the engine is operating and delivers a constant flow of fuel under a regulated pressure to the fuel metering section of the injector. The fuel metering section operates by measuring the airflow through the throttle body of the injector and uses this measurement to operate a servo valve within the section. The accurately regulated fuel pressure established by the servo valve is used to control the flow divider, which then schedules fuel flow to the cylinders in proportion to airflow. Refer to Figure 13-17 for the fuel system installation.

B. Fuel Tanks

(1) Tank – Removal

(a) Drain fuel into suitable containers, siphon fuel from tanks, then drain remaining fuel by opening the tank drain valves (1) at the bottom of each tank.

(b) Disconnect vent lines (2) at top of tanks.

(c) Disconnect fuel level sending unit wires at the “wristlock” connections located between the tops of the tanks.

(d) Disconnect fuel outlet lines (3), tank drain lines (1), and scupper drain lines (4) at bottom of tank.

(e) Remove screws (5) attaching tanks to bulkhead and cabin.

(f) Remove fuel tanks.

NOTE: Shims dislodged during tank removal should be resecured in position with 3M brand Trim Adhesive, P/N 08021, or equivalent.

(2) Tank – Installation

(a) Position tanks on bulkheads and install attachment screws (5), at cabin and bulkhead.

(b) Connect vent lines (2) at top of tanks.

(c) Connect fuel level sending unit wires at the “wristlock” connections.

(d) Secure plastic covers over "wristlock" connections with tie-wrap.

(e) Secure wires to main rotor transmission vent pipe with tie-wrap.

(f) Connect fuel outlet lines (3), tank drain lines (1), and scupper drain lines (4) at bottom of tank.

(g) Fill fuel tanks to check gauge calibration (Para. 13-10, B, (3)).

UNCONTROLLED COPY WHEN DOWNLOADED OR PRINTED

Visit www.enstromhelicopter.com for instructions to order an original manual and to register for email notification of updates.

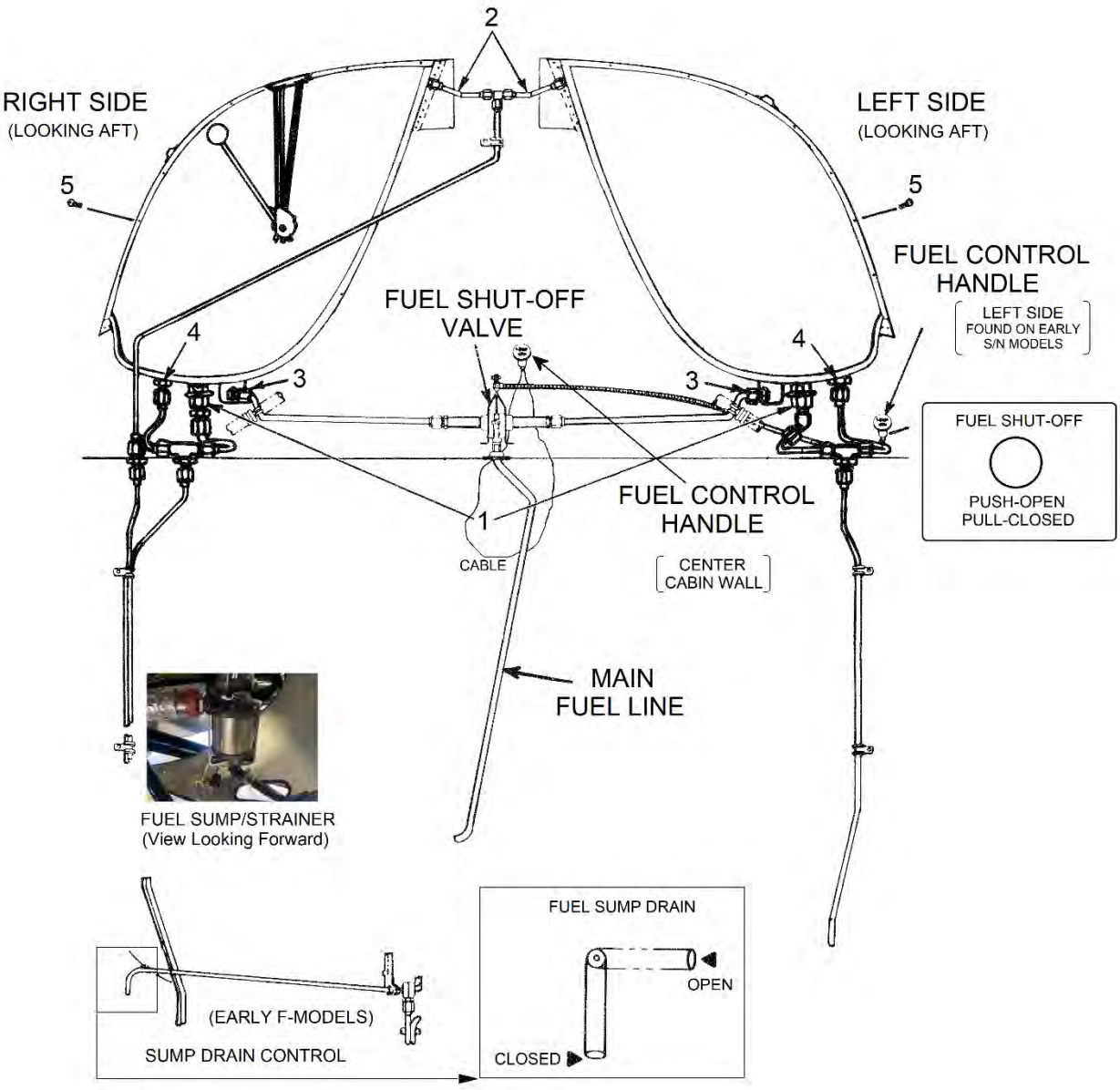

1. Drain Line
2. Vent Line
3. Outlet Line
4. Scupper Drain Line
5. Screw

Figure 13-17. Fuel Tank Installation

UNCONTROLLED COPY WHEN DOWNLOADED OR PRINTED

Visit www.enstromhelicopter.com for instructions to order an original manual and to register for email notification of updates.

(3) Fuel Transmitter Calibration (See Figure 13-18, Figure 13-19)

NOTE: Calibrate the fuel quantity system in accordance with the following procedure any time maintenance is performed on the fuel quantity system (i.e. replacing a quantity transmitter, wiring, or indicator).

NOTE: Perform the inspection procedure listed in Para. 13-10, B, (4), (a.1) anytime the fuel quantity system is suspected of being out of calibration.

NOTE: Cabin fuel gauge calibration is done with aircraft in flight attitude (6° nose down angle), ground handling wheels down.

NOTE: Fuel dip stick calibration procedures are provided in SIL 0182. When calibrating the fuel dip stick, the helicopter must be in its normal parked attitude.

(a) Place aircraft into 6° nose down attitude and level aircraft laterally to within ±1/2 degree using ground handling wheels and shoring materials or other suitable means. Measure the 6° nose down angle at the lower fore and aft tube located on the left side of the pylon assembly and the lateral level angle using the cockpit floor.

(b) Drain fuel from fuel system including sumps and gascolator located in lower right side of engine compartment.

(c) Close sump drains and gascolator drain.

NOTE: Each tank contains one gallon of unusable fuel.

(d) Service each tank with 1 gallon/3.78 liters of fuel (2 gallons/7.56 liters total) (zero fuel condition).

NOTE: Allow the fuel levels to stabilize in the fuel tanks before checking quantity indications or making adjustments. Verify the fuel level has stabilized with dip stick.

(e) Turn Master Switch ON.

(f) Check that the fuel quantity indicator is at “0".

(g) If indicator is not at “0":

1 Turn Master Switch “OFF”.

2 Disconnect wiring from fuel transmitter and remove transmitter from tank.

3 Bend the float arm down at the approximate midpoint if the indicator is below “0" (Figure 13-19).

4 Bend the float arm up at the approximate midpoint if the indicator is above “0" (Figure 13-19).

5 Reinstall the transmitter and check the “0" indication.

6 Repeat the adjustment procedure as required.

UNCONTROLLED COPY WHEN DOWNLOADED OR PRINTED

Visit www.enstromhelicopter.com for instructions to order an original manual and to register for email notification of updates.

(h) Service each tank with 5 gallons/18.9 liters of fuel (10 gallons/37.85 liters total).

NOTE: Allow the fuel levels to stabilize in the fuel tanks before checking quantity indications or making adjustments.

(i) Check fuel quantity indication as follows:

NOTE: In the following checks, the location of the bend in the transmitter arm can be moved to adjust the indicator range movement. If the zero fuel indication is “0" and the “1/4” or “60" indication is high, move the location of the bend in the arm closer to the arm pivot. If the indication is low, move the bend location closer to the arm float. After making an adjustment to the bend in the arm, always recheck the zero fuel condition. The indicator must indicate “0" when the aircraft is in the zero fuel condition.

NOTE: Some older F-models are equipped with the fuel tank sight window.

1 Check that the fuel quantity indication is “60" lbs ± 1 gallon/3.78 liters.

2 Replace fuel transmitter if the indication cannot be corrected by moving the bend location on the float arm.

NOTE: Previously published procedure regarding F-models equipped with the fuel tank sight window was removed due to obsolescence.

Figure 13-18. [Deleted]

(4) Fuel Transmitter (See Figure 13-19)

(a) Removal – Fuel Transmitter

NOTE: Note the orientation of the fuel transmitter and screws before removal.

1 Remove three screws (2) attaching sending unit cover (3) to top of right fuel tank. Remove cover (3) and spacers (4).

2 Remove screw (7) and disconnect ground wire (5).

3 Remove nut (10) and washers (11), (12) and remove transmitter output wire (6).

NOTE: Due to the shape of the float, it is necessary to tilt the unit to get float out of fuel tank opening.

4 Remove remaining screw attaching unit to fuel tank, note location for reassembly. Remove fuel transmitter.

UNCONTROLLED COPY WHEN DOWNLOADED OR PRINTED

Visit www.enstromhelicopter.com for instructions to order an original manual and to register for email notification of updates.

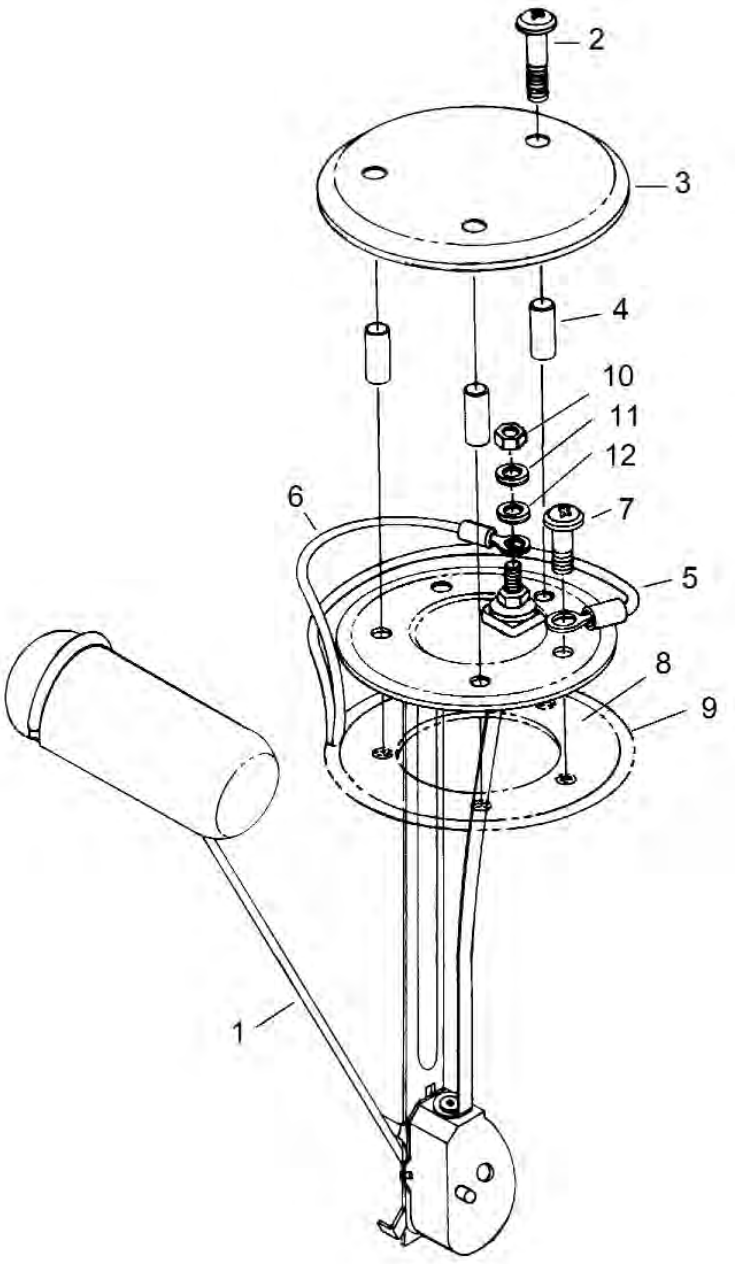



Two-piece bracket configuration
(float arm not shown)

1.	Float Arm	5.	Ground Wire	9.	Backing Plate (bonded to fuel cell)
2.	Screw	6.	Transmitter Wire	10.	Nut
3.	Cover	7.	Screw	11.	Lockwasher
4.	Spacer	8.	Gasket	12.	Washer

Figure 13-19. Fuel Transmitter

UNCONTROLLED COPY WHEN DOWNLOADED OR PRINTED

Visit www.enstromhelicopter.com for instructions to order an original manual and to register for email notification of updates.

(a.1) Inspection – Fuel Transmitter

1 Remove the cover from the fuel transmitter in accordance with preceding step 1 (if not already accomplished).

2 Inspect fuel transmitter for condition and corrosion. Remove any corrosion from the fuel transmitter stud and/or ground location. If corrosion is excessive, replace the fuel transmitter.

NOTE: In some instances, the fuel quantity transmitter can develop a high resistance at the interface between the upper and lower bracket of the two-piece bracket configuration (see Figure 13-19, inset photo). Mark the upper and lower brackets with a reference mark and disassemble the two brackets. Using Scotch Brite, abrade the interface and then reassemble. Verify operation when inspection steps are completed.

3 Inspect wiring for condition and security. Clean the electrical contacts to remove any waxy or oily residue. Repair the wiring as required. Apply a corrosion inhibitor (ACF-50) to the ground wire and the transmitter wire connections.

NOTE: ACF-50 protects for up to one year (two years on new metal).

4 Determine quantity of fuel in tank using a dip stick or similar method. Verify fuel gauge reading matches the actual fuel quantity.

5 If the fuel quantity system is suspected of being out of calibration or if any maintenance on the fuel quantity system, i.e., right side fuel tank, quantity transmitter, wiring, or indicator has been performed, check the calibration of the fuel quantity system in accordance with preceding Para. (3), steps (a) through (i).

NOTE: Ensure the spacers are installed on the transmitter cover screws.

6 Remove the old sealant from the fuel transmitter cover and fuel tank. Apply sealant (Dow Corning RTV 732 or equivalent) to the cover, under the cover screw heads, and seal the wire conduit. Install the cover and torque the screws to 12-15 in. lbs./1.4-1.7 Nm. Remove any excess sealant.

(b) Installation – Fuel Transmitter

1 Replace gasket (8), if damaged, or installing a replacement fuel transmitter.

2 Install fuel transmitter into fuel tank.

3 For a replacement fuel transmitter, apply CP8-TB (Kopr-Shield) to the ground wire contact and the transmitter output wire contact.

4 Install the one mounting screw and connect ground wire (5) with screw (7). Torque screws (12-15 in-lb/1.4-1.7 Nm).

UNCONTROLLED COPY WHEN DOWNLOADED OR PRINTED

Visit www.enstromhelicopter.com for instructions to order an original manual and to register for email notification of updates.

5 Connect transmitter wire (6) with washers (11), (12) and nut (10).

NOTE: Do not over torque. If stud is spun, a system fault can occur.

6 Apply corrosion inhibitor (ACF-50) to ground wire (5) and transmitter wire connections (6) and remaining exposed sending unit surface within the cavity.

NOTE: ACF-50 protects for up to one year (two years on new metal).

7 Calibrate the fuel quantity system in accordance with preceding Para. (3), (a) through (i).

8 Remove old sealant from fuel transmitter cover (3) and fuel tank.

9 Apply sealant (Dow Corning RTV 732, or equivalent) to cover (3), under cover screw (2) heads, and wire conduit.

NOTE: Ensure spacers are installed on transmitter cover screws.

10 Install cover (3), spacers (4), and screws (2). Torque screws (12-15 in-lb/1.4-1.7 Nm).

11 Remove any excess sealant.

(5) Fuel Tank – Repairs

(a) Drain fuel from tanks.

(b) Remove leaking tank(s) from aircraft.

(c) Remove fuel level sending unit (right tank) and all other fittings, as applicable.

NOTE: Sloshing sealer used is 3M Fuel Resistant Coating EC-776.

(d) Repair a fuel tank seam as follows:

NOTE: This procedure is limited to sealing only the area of the tank with the suspected leak. This limited application is sufficient to repair a seam leak without excessive or unnecessary use of sloshing sealer.

CAUTION: CARE MUST BE TAKEN TO PREVENT SLOSHING SEALER FROM COATING FUEL FITTINGS. REMOVE FITTINGS AND PLUG HOLES IF NECESSARY.

1 Prop tank such that the seam (especially the area of the seam with the suspected leakage) is visible through the filler neck.

2 Using a funnel, pour approximately 1/4 cup/60 mL of sealer into the area of the tank seam. Rock the tank back and forth to allow the sealer to flow along the seam in each direction until the seam is fully coated with sealer. (There should be no excess sealer remaining.)

NOTE: A fabricated channel formed of non-porous cardboard or similar material may be used in lieu of a funnel.

UNCONTROLLED COPY WHEN DOWNLOADED OR PRINTED

Visit www.enstromhelicopter.com for instructions to order an original manual and to register for email notification of updates.

3 Repeat step (e).

4 Prop the tank so that the suspected leakage area is oriented at the bottom and at the lowest point possible while propped up.

5 Insert an air hose into the tank to provide a gentle air flow. Leave the tank in place to allow sealer to cure per manufacturer's instructions.

NOTE: Allow a minimum of eight hours cure time. (Sloshing compound is tack-free when cured.)

6 Install fuel level sending unit (right tank) and fittings, if required.

7 Check sump drain to assure it is not blocked.

8 Cap all fuel outlets.

9 Place approximately five gallons of fuel in the tank to check for leaks before installation on the aircraft.

10 Drain fuel and reinstall tank on aircraft.

(e) Repair leak(s) around tank cover seam.

1 Drill out rivets in area of leak.

2 Remove old fuel tank sealant from between tank and cover by scraping.

3 Install a new coating of PR1440 B-2 fuel tank sealant.

4 Drill out rivet holes and install next size larger diameter rivets.

5 Allow PR1440 B-2 to cure tack-free.

6 Coat interior of tank in area of repair with sloshing sealer.

CAUTION: CARE MUST BE TAKEN TO PREVENT SLOSHING SEALER FROM COATING FUEL FITTINGS. REMOVE FITTINGS AND PLUG HOLES IF NECESSARY.

7 Drain excess sloshing sealer.

8 Allow compound to cure tack-free.

9 Place approximately five gallons of fuel in the tank to check for leaks.

10 Drain fuel and reinstall on aircraft.

UNCONTROLLED COPY WHEN DOWNLOADED OR PRINTED

Visit www.enstromhelicopter.com for instructions to order an original manual and to register for email notification of updates.

C. Fuel Boost Pump

(1) General Information

The fuel system boost pump is factory set at a pressure of 27 psi. A pressure switch monitors the fuel system pressure and activates the indicator panel lights. The green light will come on when the fuel system pressure increases to 20 psi and above. The red warning light will come on when the fuel system pressure falls to 15 psi or below.

NOTE: Newer F-models will not have the green normal fuel pressure indicator.

(2) Boost Pump – Adjustment

NOTE: Adjustments are to be made with a fully charged battery.

(a) Master switch - OFF

(b) Boost pump switch - OFF

(c) Fuel shutoff valve - CLOSED

(d) Remove 7/16 inch plug from RSA fuel injector.

(e) Install 0-50 psi pressure gauge.

(f) Fuel shutoff valve - OPEN

(g) Mixture control to idle cutoff.

(h) Master switch - ON

(i) Magneto switch - OFF

(j) Boost pump switch - ON

NOTE: Fuel pressure should read 27 psi.

(k) Loosen jam nut on boost pump relief valve adjustment screw.

(l) Adjust boost pump pressure.

NOTE: Clockwise rotation of the adjustment screw decreases pressure.

(m) Lock adjustment screw with jam nut.

(n) Recheck pressure.

(o) Boost pump switch - OFF

UNCONTROLLED COPY WHEN DOWNLOADED OR PRINTED

Visit www.enstromhelicopter.com for instructions to order an original manual and to register for email notification of updates.

(p) Master switch - OFF

(q) Fuel shutoff valve - CLOSED

(r) Adjust engine-driven fuel pump.

D. Engine-Driven Fuel Pump

(1) Engine-Driven Fuel Pump - Removal (See Figure 13-21)

WARNING: ENSURE FUEL SHUTOFF VALVE IS CLOSED.

(a) Remove firewall access panels.

(b) Disconnect fuel inlet line (1) and outlet line (2).

(c) Disconnect static pressure line (3) and drain line (4).

(d) Cut safety wire and remove bolts (5) which secure fuel pump to scavenge pump and engine accessory case mounting pad.

(e) Remove fuel pump and fiber spacer (7).

CAUTION: WITHDRAW FUEL PUMP STRAIGHT AWAY FROM ENGINE. SCAVENGE PUMP WILL REMAIN IN POSITION WITH OIL LINES INTACT.

(2) Engine-Drive Fuel Pump - Inspection

Perform an inspection and operational check on the engine-driven fuel pump in accordance with manufacturer's overhaul instructions.

(3) Engine-Driven Fuel Pump - Installation (See Figure 13-21)

NOTE: On new fuel pumps, install elbows in correct locations prior to installation on engine.

(a) Install bolts (5) with washers through the fuel pump.

(b) Install fiber spacer (7) on bolts.

(c) Align splined shaft and bolts to scavenge pump and slide fuel pump into position, lubricate spline.

NOTE: Be sure gasket between scavenge pump and engine is properly aligned before securing bolts.

(d) Secure scavenge pump and fuel pump to engine accessory case. Torque bolts and safety wire in pairs with MS20995C32 wire.

UNCONTROLLED COPY WHEN DOWNLOADED OR PRINTED

Visit www.enstromhelicopter.com for instructions to order an original manual and to register for email notification of updates.

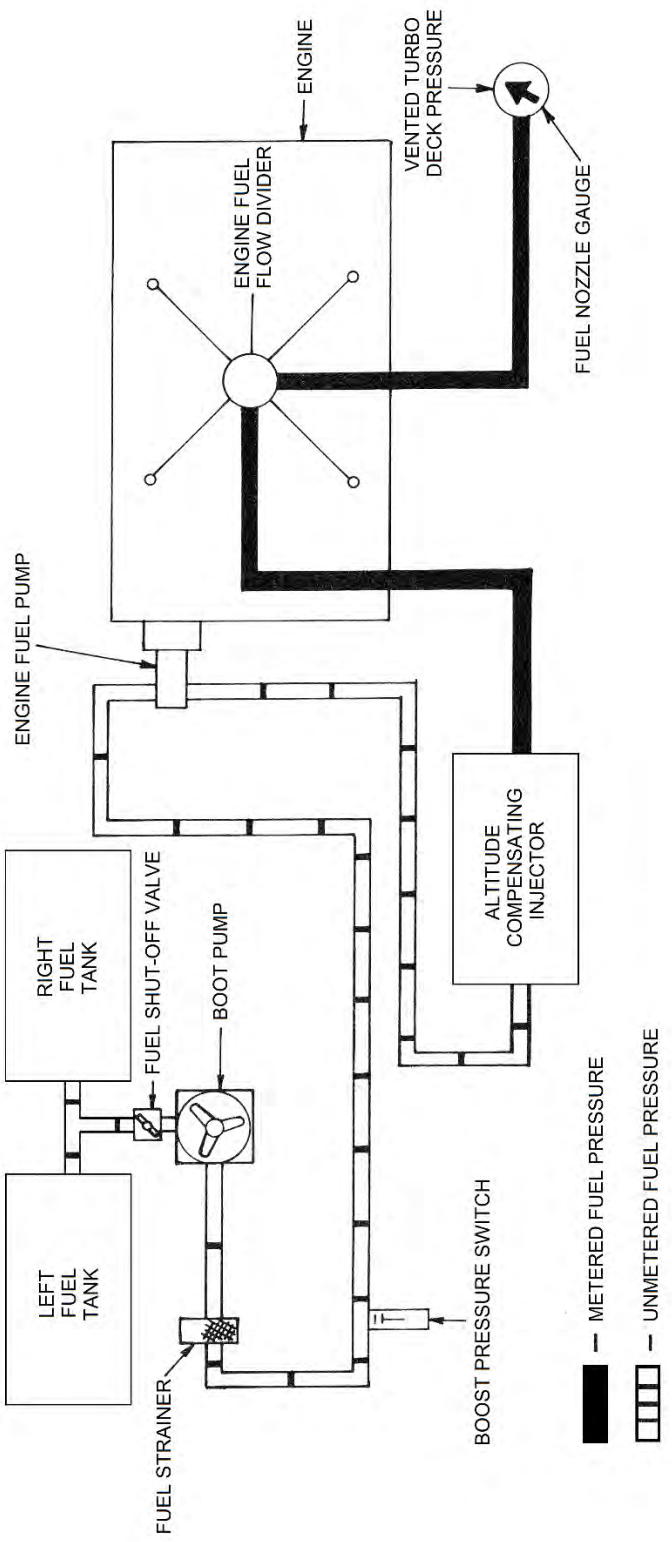

Figure 13-20. Fuel Flow Schematic

UNCONTROLLED COPY WHEN DOWNLOADED OR PRINTED

Visit www.enstromhelicopter.com for instructions to order an original manual and to register for email notification of updates.

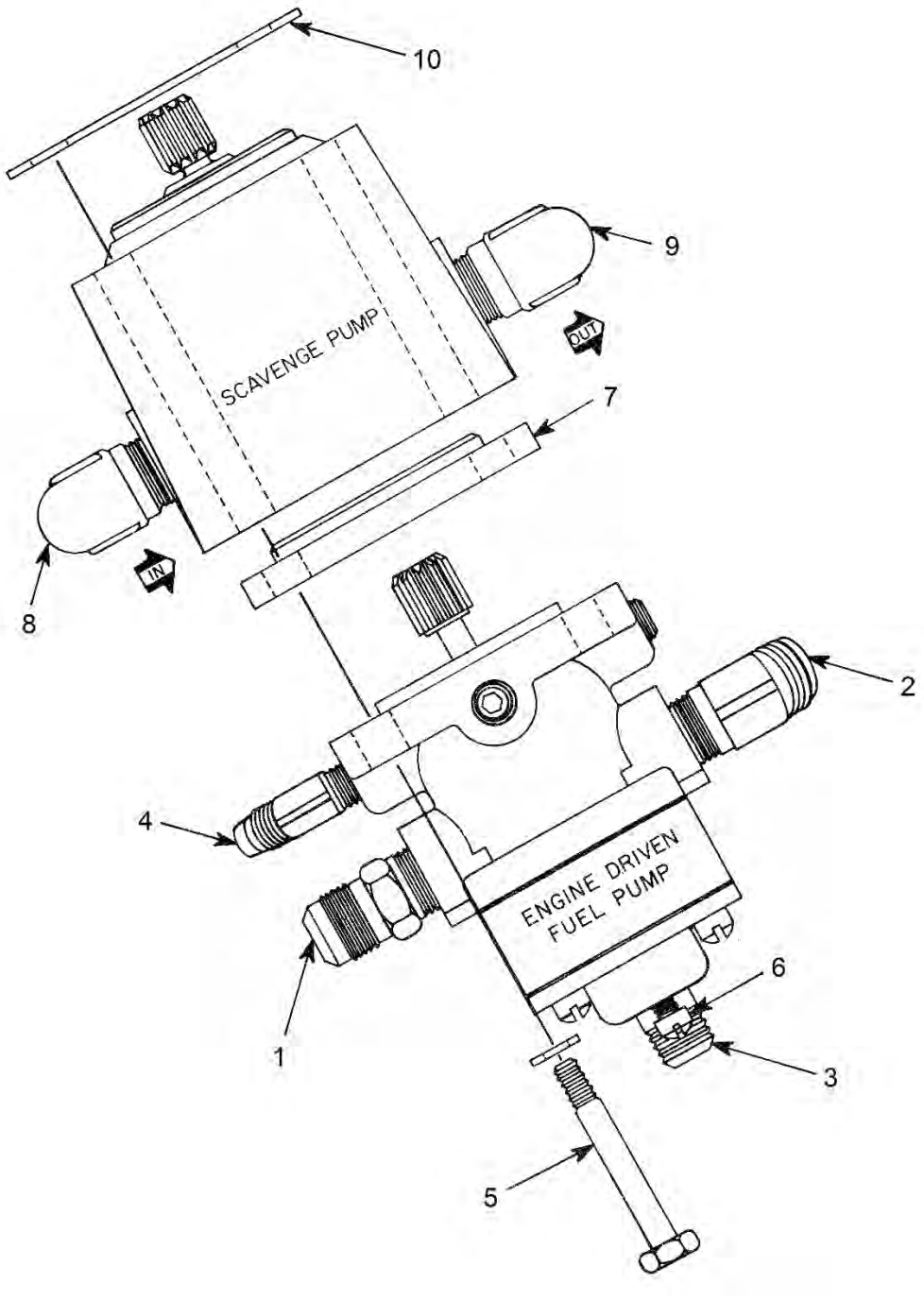

1.	Fitting (Fuel Inlet Line)	6.	Adjustment Screw
2.	Fitting (Fuel Outlet Line)	7.	Fiber Spacer
3.	Fitting (Static Pressure Line)	8.	Fitting (Oil Inlet Line)
4.	Fitting (Drain Line)	9.	Fitting (Oil Outlet Line)
5.	Bolt	10.	Gasket

Figure 13-21. Engine Driven Fuel Pump and Scavenge Pump

UNCONTROLLED COPY WHEN DOWNLOADED OR PRINTED

Visit www.enstromhelicopter.com for instructions to order an original manual and to register for email notification of updates.

(e) Connect drain line (4) and static line (3).

(f) Connect fuel inlet line (1) and outlet line (2).

NOTE: Following the removal and overhaul of any fuel system-related engine components, turn fuel on and check operation of fuel system. Every 25 hours a visual check of the pump drain should be made with the engine running. If the engine-driven pump fails, there is a possibility that it will pump fuel overboard through the drain line.

(4) Engine-Driven Fuel Pump - Adjustment

NOTE: Fuel boost pump pressure should be adjusted prior to adjustment of engine-driven fuel pump.

(a) Remove safety wire from engine-driven fuel pump adjustment screw (6).

(b) Follow normal engine starting and rotor engagement procedures.

(c) Engine rpm - 3050

(d) Boost pump - OFF

(e) Adjust engine driven fuel pump to 24 ± 1 psi.

NOTE: Clockwise rotation of the adjustment screw increases pressure.

(f) Follow normal engine cooling and shutdown procedure.

(g) Safety wire adjustment screw (6).

(h) Remove 0-50 psi pressure gauge.

(i) Reinstall and safety wire 7/16-inch plug.

(j) Run engine and check for fuel system leaks.

(k) Perform idle mixture and rpm check.

E. Fuel Filter

(1) Fuel Filter - Removal

(a) Shut off fuel with fuel shutoff valve.

(b) Drain fuel from filter by opening sump drain.

(c) Disconnect sump drain valve extension shaft from assembly.

UNCONTROLLED COPY WHEN DOWNLOADED OR PRINTED

Visit www.enstromhelicopter.com for instructions to order an original manual and to register for email notification of updates.

(d) Disconnect fuel inlet and outlet line.

(e) Cap lines and fittings.

(f) Remove safety wire from pipe plug at top of assembly.

(g) Remove bolts securing strainer assembly to pylon mount bracket.

(2) Fuel Filter - Disassembly

NOTE: The assembly does not have to be removed from aircraft for filter inspection.

(a) Remove safety wire from bolt at bottom of filter retaining bracket.

(b) Loosen filter retaining bracket bolt.

(c) Swing retaining bracket forward to release bottom cover, outer body, and gaskets.

(d) Remove retaining pin at bottom of filter to release end cap.

(3) Fuel Filter - Inspection

(a) Check fuel filter assembly for:

1 Cracks and evidence of corrosion.

2 Loose or damaged fittings.

3 Worn or damaged gaskets.

4 Security of filter retaining pin.

(b) Check filter for:

1 Rips, dents, or deformation.

2 Contamination.

(4) Fuel Filter Assembly - Cleaning

(a) Clean fuel filter assembly in accordance with Para. 4-5.1.

(5) Fuel Filter Housing - Assembly

(a) Install upper gasket, filter top ring, screen, and end cap.

(b) Secure filter with pin (spring clip).

WARNING: THE CURVED SECTION OF THE PIN MUST BE INSTALLED BETWEEN THE STRAIGHT SECTION OF THE PIN AND THE BASE OF THE SCREEN AND THE CURVED TAIL OF THE PIN MUST BE TUCKED UNDER THE STRAIGHT SECTION OF THE PIN (FIGURE 1). THE SCREEN ASSEMBLY MUST BE CHECKED FOR LOOSENESS AND MUST FIT TIGHTLY INTO THE FILTER BASE.

UNCONTROLLED COPY WHEN DOWNLOADED OR PRINTED

Visit www.enstromhelicopter.com for instructions to order an original manual and to register for email notification of updates.

NOTE: Take care that the curved portions of the pin are installed between the bottom cap of the filter and the straight section of the pin and that the curved section of the pin tail is tucked under the straight section of the pin (Figure 13-21.1).

(c) Check screen fits tightly into filter assembly top cap with no looseness.

(d) Install gasket in bottom cover.

(e) Install outer body and end cap on assembly.

NOTE: Align drain port on end cap with fuel outlet port on top of assembly.

(f) Swing retaining bracket under assembly and align bolt with recess in end cap.

(g) Secure assembly by tightening retaining bracket bolt (torque 20-25 in-lb/2.3-2.8 Nm) and safety (MS20995C32) bolt to bracket.

(h) Install drain valve and tube in bottom of assembly.



Figure 13-21.1a. Correct Installation of Pin; Curved tail is installed under the straight tail.



Figure 13-21.1b. Incorrect Installation of Pin; Curved tail is installed over the straight tail.

(6) Fuel Filter Assembly - Installation

(a) Attach filter assembly to pylon with drain valve positioned aft.

(b) Safety wire plug on top of assembly.

UNCONTROLLED COPY WHEN DOWNLOADED OR PRINTED

Visit www.enstromhelicopter.com for instructions to order an original manual and to register for email notification of updates.

(c) Attach fuel inlet line to the forward top port.

(d) Attach fuel outlet line to the aft top port.

(e) Attach drain valve extension.

(f) Close drain valve.

(g) Open fuel shutoff valve.

(h) Turn boost pump ON.

(i) Mixture control to idle cutoff.

(j) Check for fuel leakage.

(k) Turn off boost pump and close fuel shutoff valve.

F. Fuel Pressure Switch

(1) Fuel Pressure Switch - Removal

(a) Close fuel shutoff valve.

(b) Drain fuel sump.

(c) Remove safety wire from electrical connection.

(d) Disconnect electrical connection.

(e) Disconnect switch assembly from pylon attachment.

(f) Loosen jam nut on fuel line attachment fitting.

(g) Remove switch assembly from fuel line fitting.

(2) Fuel Pressure Switch - Installation

(a) Install switch assembly on fuel line fitting.

(b) Secure with jam nut.

(c) Attach switch assembly to pylon clamp.

(d) Install electrical connector.

(e) Safety wire connector to switch assembly.

(f) Open fuel shutoff valve.

(g) Turn boost pump on.

(h) Mixture control to idle cutoff.

(i) Check for fuel leakage.

UNCONTROLLED COPY WHEN DOWNLOADED OR PRINTED

Visit www.enstromhelicopter.com for instructions to order an original manual and to register for email notification of updates.

(j) Turn off boost pump and close fuel shutoff valve.

G. Fuel Shutoff Valve

(1) Fuel Shutoff Valve - Removal

(a) Remove left fuel tank to gain access to shutoff valve.

(b) Disconnect fuel line from aft side of valve.

(c) Disconnect fuel lines from left and right sides of valve.

(d) Disconnect cable from valve actuating arm: loosen jam nut, loosen screw, and unhook wire.

(e) Remove bolts securing valve to pylon.

(2) Fuel Shutoff Valve - Installation

(a) Secure valve to pylon mount with two nuts and bolts.

(b) Install and check rigging (step (3)) of control cable.

(c) Connect fuel inlet and outlet lines.

(d) Install fuel tank.

(e) Place fuel in tanks and check for leaks prior to flight.

(3) Fuel Shutoff Valve - Rigging

(a) Position top of shutoff valve actuating arm full forward to ensure valve is open.

(b) Insert wire from control cable through hole in valve actuating arm attachment swivel.

(c) Secure cable sheath to pylon.

(d) Secure wire in swivel by tightening the screw on the swivel end and locking it with the jam nut.

(e) Form a hook in the wire end by bending it upward and aft.

(f) Position shutoff valve control knob pushed in to within 0.25 inch of nut securing it to firewall.

NOTE: This 0.25-inch "cushion" is used to ensure the valve is completely open when the control knob is pushed in.

(g) Check control operation: Pull knob out, to close valve, and push it back in to open the valve.

1 The knob should not bottom out at the firewall.

UNCONTROLLED COPY WHEN DOWNLOADED OR PRINTED

Visit www.enstromhelicopter.com for instructions to order an original manual and to register for email notification of updates.

2 Check for further movement of the shutoff valve actuating arm by manually pulling the top of the arm forward. The arm should not have any further movement forward. If there is further movement forward, check the cable security and repeat the rigging procedure.

13-11 LUBRICATION SYSTEM

A. Description

Engine oil flows to the turbocharger from the engine through a restricted elbow fitting. On this same line, a valve is located just before the oil inlet to the turbocharger. This check valve prevents an oil buildup in the turbocharger after the engine is shut down. An engine-driven scavenge pump is utilized to return the turbocharger oil back to the engine sump. The scavenge pump parts are stamped "in" or "out" and the correct rotation is marked.

Two reverse flow oil coolers are used to cool the oil for the entire system. Cooling air from the fan is directed through the cores of the coolers and exhausted into the atmosphere. Regulation of oil flow through the cooler is accomplished by a temperature and pressure sensitive valve located in the engine accessory case.

The cockpit oil pressure gauge line runs from under the instrument console back to the engine accessory case.

Refer to Figure 13-22 for the lubrication system schematic.

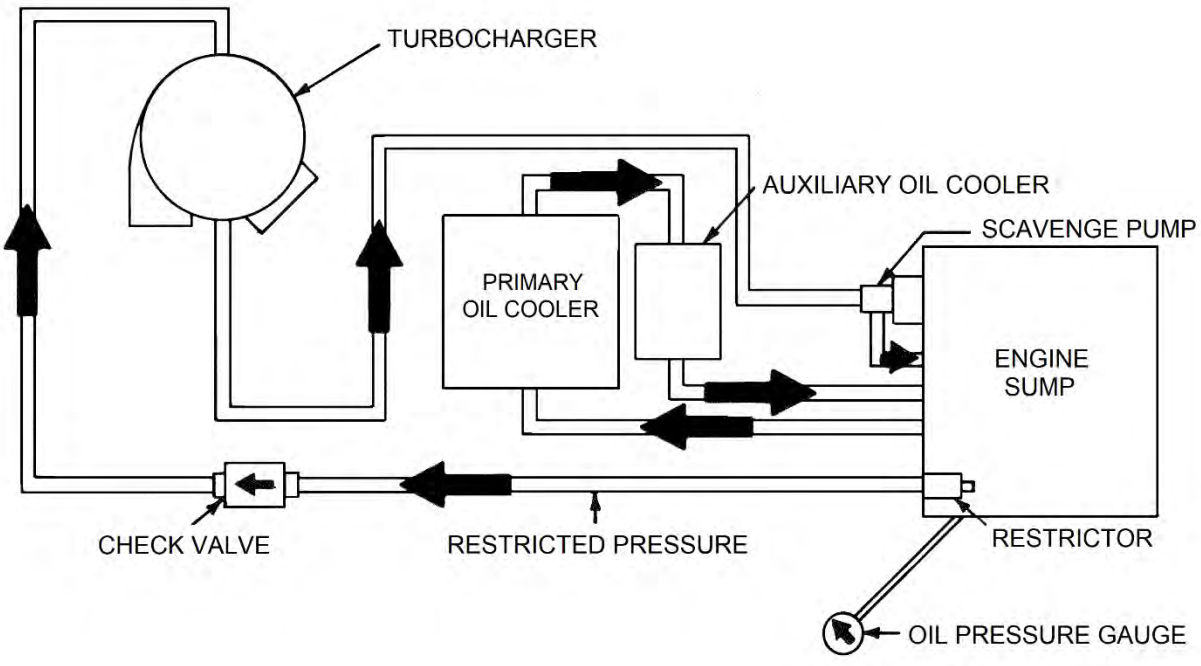

Figure 13-22. Oil System Diagram

Visit www.enstromhelicopter.com for instructions to order an original manual and to register for email notification of updates.

B. Oil Coolers

(1) Oil Cooler - Removal

The primary oil cooler is mounted on the right-hand side of the engine compartment. The auxiliary oil cooler is mounted to a duct located on the lower left side of the cooling fan shroud.

(a) Primary Oil Cooler

1 Open right side cowl.

NOTE: Place magneto switch in OFF position.

2 Drain oil out of the lower inlet oil line fitting.

NOTE: Place container beneath the oil cooler when disconnecting lines to collect any drain oil from the cooler and lines.

3 Disconnect and cap the inlet lines.

4 Remove four bolts holding the oil cooler boot to the inboard side of the oil cooler.

5 Remove four bolts holding the oil cooler air exit duct to the outboard side of the oil cooler.

NOTE: Upon removal of cooler, visually inspect rubber flex boot for rips. Replace the boot assembly if necessary.

(b) Auxiliary Oil Cooler

1 All switches - OFF

2 Drain oil from engine sump.

3 Open left cowl.

4 Place oil catch pan beneath oil cooler.

5 Disconnect and plug inlet and outlet lines.

6 Remove two screws and washers from bottom of oil cooler heat shield.

7 Remove two screws and washers from top of oil cooler heat shield.

8 Remove heat shield.

9 Remove two screws and washers attaching aft side of oil cooler to oil cooler duct.

10 Remove oil cooler.

(2) Oil Cooler - Inspection

(a) Inspect oil coolers for:

UNCONTROLLED COPY WHEN DOWNLOADED OR PRINTED

Visit www.enstromhelicopter.com for instructions to order an original manual and to register for email notification of updates.

1 Bent, broken or dirty core fins.

2 Nicked, burred, or deformed plumbing fittings.

3 Deformed screw holes.

4 Loose boot attachment to oil cooler inlet.

(b) Inspect oil cooler air ducts for:

1 Cleanliness.

2 Cracks, checking, tears or dents.

3 Integrity of mounting flanges.

(c) Inspect oil inlet and return lines for:

1 Cleanliness and freedom from obstructions.

2 Cracks, checking, swelling, and kinks.

3 Integrity of wire shields.

4 Plumbing fittings for nicks, burrs, and deformity.

(3) Oil Cooler - Leakage Check

(a) Perform a hydrostatic test on the oil cooler. Operate test set in accordance with manufacturer's instructions or take oil cooler to certified facility and have it pressure tested for leakage.

(b) Install pressure cap on one oil cooler fitting.

(c) Connect test set to remaining oil cooler fitting.

(d) Regulate test set pressure to 150 psi.

(e) Check for leakage.

NOTE: Leakage is indicated by escaping fluid and a drop in regulator pressure.

(f) Locate and mark source of leak, if any.

NOTE: Use standard procedure to repair leaks. If required repairs are inaccessible or extensive, replace oil cooler with a new unit. After repairs are completed, repeat steps (a) through (e).

(g) Remove oil cooler from test set.

(4) Oil Cooler - Installation

(a) Primary oil cooler.

1 Secure oil cooler to the oil cooler boot and lower mount with four bolts.

UNCONTROLLED COPY WHEN DOWNLOADED OR PRINTED

Visit www.enstromhelicopter.com for instructions to order an original manual and to register for email notification of updates.

2 Secure oil cooler inlet and return lines.

3 Secure air inlet duct to oil cooler and lower mount with four bolts.

4 Thoroughly inspect the oil cooler assembly installation, torque on fittings, routing of lines, and ducting.

5 Perform preflight inspections; service engine as required.

6 Perform operational check of engine prior to flight.

7 After the engine has been run up to operating temperature, inspect assembly for oil leaks.

NOTE: Oil circulates through the entire system only when engine is at operating temperature.

8 Secure right side cowl.

(b) Auxiliary Oil Cooler

1 Position oil cooler in place on the duct from the cooling fan shroud with inlet and outlet fittings aft.

2 Install two screws and washers in aft side of oil cooler mount.

3 Place heat shield in position.

4 Install two screws and washers in top of heat shield.

NOTE: It may be necessary to bend the heat shield slightly to facilitate installation of the top two screws.

5 Install two screws and washers in the bottom of the heat shield.

6 Remove inlet and outlet line plugs and connect lines to oil cooler.

7 Check routing of lines.

8 Check fittings and attachment hardware for security.

9 Service oil system to proper level.

10 Run engine to bring oil to normal operating temperature.

11 Shut down engine and inspect for leaks.

C. Scavenge Pump

(1) Scavenge Pump – Removal (See Figure 13-21)

The scavenge pump is removed with the same procedure listed under Engine-Driven Fuel Pump Removal – Section 13-10, with the following additions:

(a) Disconnect oil inlet line (8).

UNCONTROLLED COPY WHEN DOWNLOADED OR PRINTED

Visit www.enstromhelicopter.com for instructions to order an original manual and to register for email notification of updates.

(b) Disconnect oil outlet line (9).

(c) Pull engine-driven fuel pump and scavenge pump out as a unit.

(d) Remove gasket (10).

(2) Scavenge Pump – Installation (See Figure 13-21)

Complete Engine-Driven Fuel Pump Installation Procedure, Section 13-10, with the following additions:

(a) Install scavenge pump and gasket (10) on bolts (5) with spacer (7) and engine-driven fuel pump.

(b) Install both pumps as a unit into engine case.

(c) Connect oil inlet line (8) and outlet line (9).

(d) Check for both oil and fuel leaks.

(e) Verify the operation:

NOTE: The turbocharger does not have seals on the turbo wheel and relies on the scavenge pump scavenging more oil than the engine can supply as there is a restrictor in the oil line from the engine to the turbocharger.

1 Disconnect the turbocharger flexible drain line from the hard line to the scavenge pump.

2 Connect a line to each end of the hose and route both hoses down into a container with two quarts of clean fresh oil.

3 Crank the engine. The scavenge pump should empty the container of oil as it should remove more oil than what is supplied through the restrictor.

4 Reassemble the flexible drain line to the hard line.

UNCONTROLLED COPY WHEN DOWNLOADED OR PRINTED

Visit www.enstromhelicopter.com for instructions to order an original manual and to register for email notification of updates.

13-12 CORRELATOR

This specification presents the method to most accurately and safely rig the throttle correlator system used on the F-28F and 280F aircraft. The correlator rigging is a repetitive process and, by necessity, some of the steps are repeated. Although this procedure is written to incorporate the minimum number of steps, the more repetitions used to rig the correlator, the better the correlator will perform.

A. Operating Principles

The mechanical correlator installed on the Enstrom Piston Engine helicopters automatically operates the throttle when the pilot moves the collective relieving the pilot of having to manipulate the throttle to maintain blade RPM in the green arc. The correlator is unlike an electronic governor in that the throttle twist grip must not move during collective operation. This forces the correlator to change the position of the throttle arm on the servo. If the throttle twist grip is allowed to rotate during collective operation, the correlator will not cause the throttle arm on the servo to move in the correct relationship to the collective, and the correlator will not work correctly.

With the helicopter sitting on the ground, the pilot begins the take-off process by opening the throttle to bring the engine and rotor RPM into the green arc, and then raises the collective while rolling OFF the throttle to maintain the RPM in the green arc. As the collective is raised, the correlator will automatically increase the throttle so to maintain the RPM in the green, the pilot must roll off throttle as the collective is raised. As the helicopter lifts into a hover with the RPM in the green, the throttle is then CORRELATED to the collective and the engine for the helicopter gross weight, density altitude, wind, etc., for that particular flight. As the pilot moves the collective up and down, the correlator automatically adjusts the throttle to maintain engine RPM.

The throttle friction must be set firmly enough so that when the collective is moved up and down, the throttle twist grip on the collective does not move.

B. Injector Rigging

(1) The injector shall be rigged as shown in Figure 13-26. The injector is at idle position. The lever may be repositioned in 15° increments by loosening the butterfly shaft nut.

(2) The injector used for the “F” model shall be one of two types:

(a) Part No. 2524858-A. This injector has been modified to obtain 85% butterfly travel with the idle screw fully backed out. Preflight idle is to be set such that the butterfly is closed to .020 inch gap in the sidewall.

(b) Part No. 2524858-1 and higher has the idle position preset at 97° and no further check is required.

(3) Connect the throttle cable:

(a) Set aft cable attach position at 6.88 plus .13/-.25 inch (Figure 13-24).

(b) Set the forward cable attach position at 1.13 ± .13 inches (Figure 13-23).

(c) Pre-adjust point "B" override stop to 0.60 ± .02 inches (Figure 13-25).

(d) Set collective stick on down stop and lock.

(e) Set injector at idle stop (Figure 13-26).

UNCONTROLLED COPY WHEN DOWNLOADED OR PRINTED

Visit www.enstromhelicopter.com for instructions to order an original manual and to register for email notification of updates.

(f) Set summing lever (1) on idle stop, point "A." (Figure 13-25).

(g) Adjust throttle cable rod ends to fit. Attach at injector.

(4) Adjust override stop, point “B” (Figure 13-27):

(a) Position collective stick on down stop.

(b) Rotate throttle twist grip open enough to insert a 0.14 ± .01 inch thick shim or tool No. T-0113 between idle stop screw and stop pin on injector (Figure 13-28). Rotate twist grip against shim and maintain pressure during step 3-c.

(c) Check for 5.0 ± .06 inches dimension between offset shaft and summing lever output arm (points "D" and "E" respectively, Figure 13-27) by:

1 Use tool gauge T-0111 or similar device and slip over offset shaft (point "D") adjacent to offset fitting (1).

2 Attempt to slip other end of tool over cone washer on summing lever, point "E."

3 Adjust override stop, point "B", until gauge tool slips over cone washer on summing lever.

(d) Lock jam nut on stop bolt, point "B."

(e) Remove 0.14-inch shim from injector stop.

(f) Set injector idle stop arm against stop pin (Figure13-26).

(g) Set correlator summing lever at idle stop, point "A" (Figure 13-25).

(h) Remove bolt connecting throttle cable to throttle arm on servo and check that bolt is a slip fit and that the throttle stop is against the stop (Figure 13-26).

NOTE: If there is insufficient thread engagement in rod end, then aft cable housing attachment on pylon (Figure 13-24) can be moved 6.88 +13/-.25 inches.

(5) Check wide open rigging:

(a) Raise collective stick 2 inches at handle or .25 inch at stop (Figure 13-29) from down stop position and lock.

(b) Rotate twist grip to wide open position.

(c) Check if injector wide open stop arm is against stop pin for P/N 2524858-A only (Figure 13-30). On -1 or -2 servos, stop arm may not contact stop pin; adjust to within 0.125 inch of stop pin.

NOTE: If adjustment is required, make adjustments at cable rod ends and aft cable attach point dimension 6.88 +.13/-.25 inches (Figure 13-24).

(d) Check if output lever (1) is within 0.06 inch of stop point "C" (Figure 13-29). If out of tolerance, adjust aft cable attach point dimension 6.88 +.13/-.25 inches (Figure 13-24) and repeat steps 4-c and 4-d.

UNCONTROLLED COPY WHEN DOWNLOADED OR PRINTED

Visit www.enstromhelicopter.com for instructions to order an original manual and to register for email notification of updates.

NOTE: Primary open stop should be at the injector and the stop at point “C” is secondary.

(e) Secure all hardware on cable rod ends.

(6) Recheck idle adjustments by:

(a) Set collective stick on down stop and lock.

(b) Rotate throttle twist grip to idle stop.

(c) Check at the injector that the idle adjustment screw is against the stop pin (Figure 13-26).

NOTE: The throttle twist grip must have enough authority to force all backlash out of the system and cable. A piece of paper placed between the idle adjustment screw and the stop pin should be clamped. However, only 10° rotation (20° maximum) of the twist grip should release the paper enough to be able to pull it free. Any more rotation than this causes a large dead band which uses up too much correlator motion, thus causing improper collective/throttle correlation. To adjust, move the aft cable attach point (Figure 13-24). Usually no more than one rotation of the jam nuts is required. For insufficient clamping of the paper, move the cable down. For excessive clamping move the cable up.

NOTE: Preflight rigging is now completed. Correlator will perform satisfactory until idle screw/mixture linkage adjustment has been made. Readjustment of correlator is then required for satisfactory and safe correlator function.

C. Verifying Proper Correlator Operation

(1) Remove the collective cover and the firewall access cover in the seat back to gain access to the correlator and to the fuel injector servo and waste gate linkage.

(2) Place the collective down and set the throttle so the rivet is in the 12 o’clock position.

(3) Check that the idle speed adjustment screw is against the stop on the servo.

(4) Check that the clearance between the waste gate arm and the open stop is 0.06 to 0.09 inch (Figure 13-22.1a). (The waste gate should be in the open position, Figure 13-22.1b.)

(5) Completely close the throttle; there should be no change in the position of the throttle-arm position on the servo. The throttle position between the point where the rivet is at 12 o’clock and fully closed is the override position and should have no effect on the position of the throttle arm on the servo. It is there only to make the correlator function properly.

(6) Open the throttle to the full throttle position.

(7) The throttle arm on the servo should be at least 90% open.

(8) Open and close the throttle several times.

UNCONTROLLED COPY WHEN DOWNLOADED OR PRINTED

Visit www.enstromhelicopter.com for instructions to order an original manual and to register for email notification of updates.

(9) The operation of the output lever (Figure 13-22.2, Item 2) should be smooth and the output lever should rotate freely (perpendicular to the mounting plate (1) on its shaft bolt (3) without causing the shaft to move laterally. If moving the throttle causes the pivot shaft to lean over (move laterally forward) this is an indication that there is friction in the system, throttle cable, servo, or wastegate.

(10) Raise the collective about 2 inches. Rotate the throttle from the idle position (closed) to the wide-open position. As before, the actuator arm must rotate freely on the pivot shaft parallel to the seat frame and the pivot shaft should not lean over laterally (forward). There will be no override position at the closed throttle position with the collective up two inches.

(11) Open and hold the throttle at 100%, slowly raise the collective. As the collective is raised the shaft supporting the output lever should lean over sideways (forward) and allow the collective to be raised about 2 inches without the throttle turning. At about 2 inches, the throttle will begin to close as the pivot shaft deflection reaches its limit.

(12) If the output lever shaft leans over at any time other than when the throttle arm on the servo is at the full open position, it is an indication that there is binding (friction) in the system.

D. Troubleshooting the Correlator

NOTE: If the throttle cable actuator arm moves laterally (forward) when the throttle is rotated, there is an issue with the system binding that must be corrected for the correlator to operate correctly.

(1) Throttle Cable:

(a) Disconnect the throttle cable from the servo and operate the throttle. If the throttle output lever rotates on the pivot shaft and the pivot shaft does not move out of plane, (laterally forward), the correlator and throttle cable are working correctly and the servo or the waste gate are causing the problems.

(b) If the throttle actuator arm (Figure 13-22.2, Item 2) continues to pivot sideways (forward) on its shaft when the throttle is twisted, disconnect the throttle cable from the throttle actuator arm and test the correlator operation again.

(a)  (b) 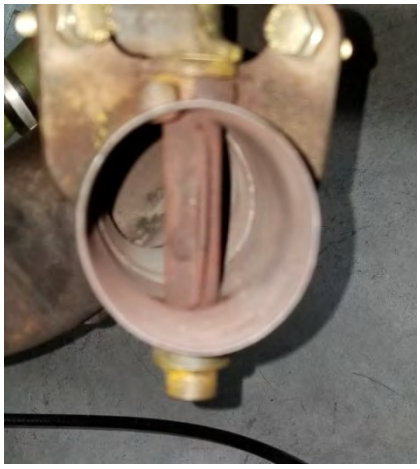

Figure 13-22.1. (a) Clearance (0.06 – 0.09 inch) between the arm and the stop; (b) Open position

UNCONTROLLED COPY WHEN DOWNLOADED OR PRINTED

Visit www.enstromhelicopter.com for instructions to order an original manual and to register for email notification of updates.

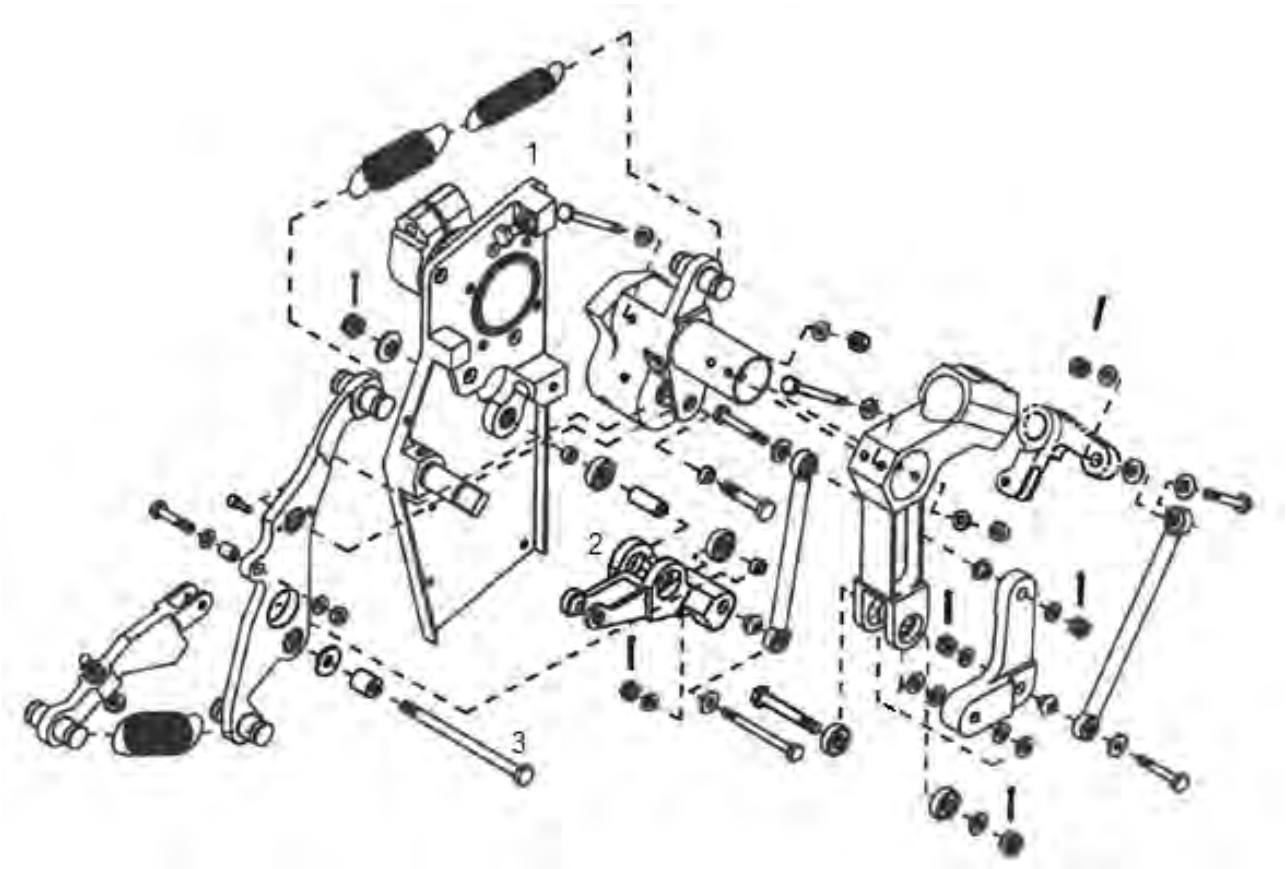

1. Mounting Plate
2. Output Lever
3. Shaft Bolt

Figure 13-22.2. Correlator Assembly

UNCONTROLLED COPY WHEN DOWNLOADED OR PRINTED

Visit www.enstromhelicopter.com for instructions to order an original manual and to register for email notification of updates.

(c) If the correlator now works correctly, the throttle cable has internal friction and should be replaced (Para. 13-13).

NOTE: In some instances, the throttle cable sheath attachment may need modification upon installation of a replacement correlator throttle cable. Refer to Tech Tip, *Modifying the Throttle Cable Sheath Attachment of F and FX Series Helicopters* and contact Enstrom Product Support for further assistance.

(2) Correlator:

(a) If the actuator arm pivot shaft is still moving laterally (forward) after the throttle cable has been disconnected, there is a problem with the correlator. Contact Enstrom product support if the cause cannot be determined.

(3) Wastegate:

(a) Disconnect the wastegate actuating arm from the throttle arm on the servo and operate the wastegate by hand.

(b) Operate the throttle and observe the throttle actuating arm for lateral movement on the pivot shaft, if the correlator now works correctly the issue is in the servo.

(4) Servo:

(a) If the correlator, throttle cable, and wastegate have been eliminated as causes, the servo is the issue.

(b) Operate the throttle arm on the servo by hand. If the throttle arm is stiff, disconnect the mixture arm control rod and operate the mixture arm and the throttle arms independently to determine if the issue is in the throttle shaft or the mixture side of the servo.

E. Correlator Preflight Rigging

NOTE: The rigging procedure is written for three considerations:

(1) When installing a new throttle cable or replacing any part of the correlator or throttle system start with Item B - Correlator Preflight Rigging.

(2) For service adjustments to cover idle adjustment, injector servicing or replacement, start with Item C - Correlator Post-Flight Rigging.

(3) When installing a replacement throttle cable, fuel servo, waste gate or engine the throttle arm to waste gate rigging should be performed first to ensure that the throttle arm is installed in the correct position on the servo.

NOTE: When installing a replacement throttle cable, wastegate, or engine the wastegate to servo adjustment should be performed first to ensure that the throttle arm is installed in the correct position on the servo.)

UNCONTROLLED COPY WHEN DOWNLOADED OR PRINTED

Visit www.enstromhelicopter.com for instructions to order an original manual and to register for email notification of updates.

(a) Wastegate Link Rod Adjustment:

1 Disconnect throttle cable from servo throttle arm.

2 Set throttle arm against the full throttle stop (Figure 13-30).

3 Adjust wastegate link length for 0.015 inch gap at wastegate closed stop. (DO NOT adjust stop. Stop was previously set for a 0.015 inch gap with the butterfly in the fully closed position.)

(4) Set throttle arm against the idle stop (Figure 13-26).

(5) Check that the gap at the waste gate open stop is 0.09 / 0.06 inch clearance.

(6) The position of the throttle arm on the servo may have to be changed if the rod cannot be adjusted.

(7) Lock jam nut on stop bolt, point "B."

(8) Remove 0.14-inch shim from injector stop.

(9) Set injector idle stop arm against stop pin (Figure13-26).

(10) Set correlator summing lever at idle stop, point "A" (Figure 13-25).

(11) Remove bolt connecting throttle cable to throttle arm on servo and check that bolt is a slip fit and that the throttle stop is against the stop (Figure 13-26).

NOTE: If there is insufficient thread engagement in rod end, then aft cable housing attachment on pylon (Figure 13-24) can be moved 6.88 +13/-.25 inches.

F. Correlator Post-Flight Rigging

(1) Readjust override stop, point "B" (Figure 13-27).

(a) Position collective stick on down stop.

(b) Rotate throttle twist grip open enough to insert a 0.14 ± .01 inch thick shim or tool No. T-0113 between idle stop screw and stop pin on injector (Figure 13-28). Rotate twist grip against shim.

(c) Check for 5.0" ± 0.06 dimension between offset shaft and summing lever output arm (points "D" and "E" respectively, Figure 13-27) by:

1 Use tool gauge T-0111 or similar device and slip over offset shaft (point "D") adjacent to offset fitting (1).

2 Attempt to slip other end of tool over cone washer on summing lever, point "E."

3 Adjust override stop, point "B", until gauge tool slips over cone washer on summing lever.

UNCONTROLLED COPY WHEN DOWNLOADED OR PRINTED

Visit www.enstromhelicopter.com for instructions to order an original manual and to register for email notification of updates.

(d) Lock jam nut on stop bolt, point "B."

(e) Remove 0.14 inch shim from injector stop.

(2) Check idle stop position.

(a) Set collective stick on down stop and lock.

(b) Rotate throttle twist grip to idle stop.

(c) Check at the injector that the idle adjustment screw is against the stop pin (Figure 13-26).

NOTE: The throttle twist grip must have enough authority to force all backlash out of the system and cable. A piece of paper placed between the idle adjustment screw and the stop pin should be clamped. However, only 10° rotation (20° maximum) of the twist grip should release the paper enough to be able to pull it free. Any more rotation than this causes a large dead band which uses up too much correlator motion, thus causing improper collective/throttle correlation. To adjust, move the aft cable attach point (Figure 13-24). Usually no more than one rotation of the jam nut is required. For insufficient clamping of the paper, move the cable down. For excessive clamping move the cable up.

(d) Readjust stop on wastegate, if necessary, to provide .06/.09 inch clearance.

(3) Check wide open injector position:

(a) Raise collective stick 2" from down stop position and lock or .25 inch from stop (see Figure 13-29).

(b) Rotate twist grip to wide open position.

(c) Check if injector wide open stop arm is against stop pin.

(d) Readjust wastegate link length, if necessary, for 0.015 inch gap at wastegate stop. (DO NOT adjust stop. This stop was previously set for a 0.015 inch gap with the butterfly in fully closed position.)

G. Adjusting the Correlator After Maintenance

(1) Adjustments to the engine such as magneto timing and fuel injection mixture adjustments may affect the correlator operation requiring fine tune adjustments after a test flight.

(2) Throttle friction must be set high enough to prevent the throttle from moving when the collective is raised and lowered.

(3) Fly the helicopter with the RPM set at 2900, 25 in MAP, and 55 MPH.

(4) While holding airspeed at 55 MPH, increase collective to 39 in MAP.

(5) Note the RPM change.

UNCONTROLLED COPY WHEN DOWNLOADED OR PRINTED

Visit www.enstromhelicopter.com for instructions to order an original manual and to register for email notification of updates.

(6) Hold airspeed and reduce collective to 25 in MAP.

(7) Note RPM change.

(8) The desired operation of the correlator will not allow the RPM to exceed the maximum RPM while increasing collective or the minimum RPM while lowering the collective.

(9) Make a small adjustment to the summing lever bolt (Figure 13-22.2, Item 180) (No more than 1/8 to 1/4 turn of the summing lever bolt each adjustment.)

(10) Fly the operational test again and continue to make adjustments until the best operation of the correlator is obtained.

13-13 CORRELATOR THROTTLE CABLE

NOTE: In some instances, the throttle cable sheath attachment may need modification upon installation of a replacement correlator throttle cable. Refer to Tech Tip, *Modifying the Throttle Cable Sheath Attachment of F and FX Series Helicopters* and contact Enstrom Product Support for further assistance.

Install a replacement correlator throttle cable in accordance with the following procedures.

A. Removal

(1) Remove fiberglass seat deck and firewall inspection panels.

(2) Remove bolt securing forward throttle cable to correlator output lever (Figure 13-25).

(3) Remove rod end and jam nut from throttle cable.

(4) Remove dust caps and measure and record the forward cable attach point (Figure13-23).

(5) Remove the sheath securing nut and lock washer from the cable sheath (Figure13-23).

(6) Remove bolt securing throttle cable to servo throttle arm (Figure13-24).

(7) Remove the dust caps and measure and record the aft cable attach point (Figure13-24).

(8) Remove the upper cable sheath securing nut and lock washer from the throttle cable aft attach point (Figure13-24).

(9) Remove the clamp securing the throttle cable to the quarter panel.

(10) Remove the throttle cable from the helicopter.

B. Installation

(1) Remove the dust caps, the outside two securing nuts, and the lock washers from the new cable.

(2) Insert one end of the cable through the firewall and the cable support (Figure13-23).

UNCONTROLLED COPY WHEN DOWNLOADED OR PRINTED

Visit www.enstromhelicopter.com for instructions to order an original manual and to register for email notification of updates.

(3) Install the lock washer and securing nut. Set the cable sheath to the dimension measured in step A, (4) (Figure13-23) and torque the nut to 80 in-lb/9 Nm.

(4) Install the dust caps on the forward end of the throttle cable.

(5) Insert the aft end of the throttle cable into the aft throttle cable support bracket.

(6) Install the lock washer and the securing nut. Set the cable sheath to the dimension measured in step A, (7) (Figure13-24) and torque the nut to 80 in-lb/9 Nm.

(7) Set the collective on the down stop and roll the throttle to the full closed position.

(8) Ensure that the summing lever is against the idle stop Point “A” (Figure13-25).

(9) Adjust the rod ends to fit at the fuel injector throttle arm (Figure13-26) and the correlator output lever (Figure13-25).

(10) Install securing hardware and torque to 20-25 in-lb/2.3-2.8 Nm.

(11) Verify that the idle stop screw is against the pin (Figure13-26) when the rivet on the throttle twist grip is in the 12 position and that the summing lever touches the Throttle Idle Stop Point “A” when the throttle is rolled completely closed.

(12) Raise the collective 2 inches and open the throttle to the FULL throttle position. Ensure that the throttle arm is against the wide open stop on the fuel injector servo.

(13) If step (11) or (12) are not in tolerance, the correlator requires rigging in accordance with Para. 13-12.

UNCONTROLLED COPY WHEN DOWNLOADED OR PRINTED

Visit www.enstromhelicopter.com for instructions to order an original manual and to register for email notification of updates.

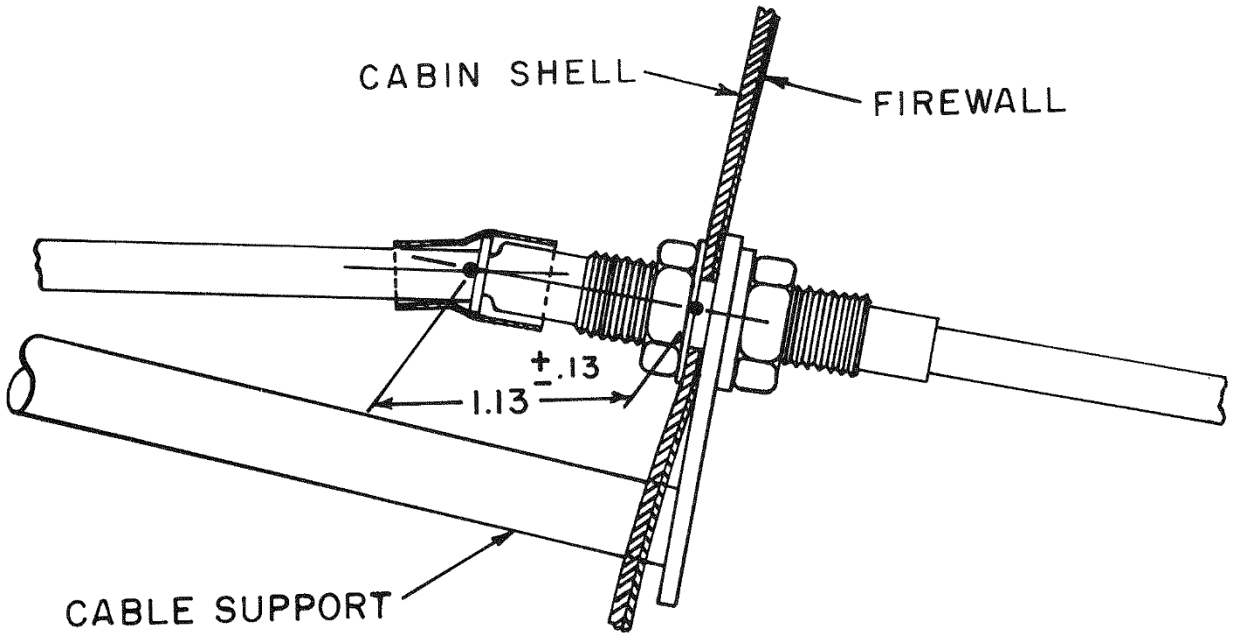

Figure 13-23. Forward Cable Attach Point

UNCONTROLLED COPY WHEN DOWNLOADED OR PRINTED

Visit www.enstromhelicopter.com for instructions to order an original manual and to register for email notification of updates.

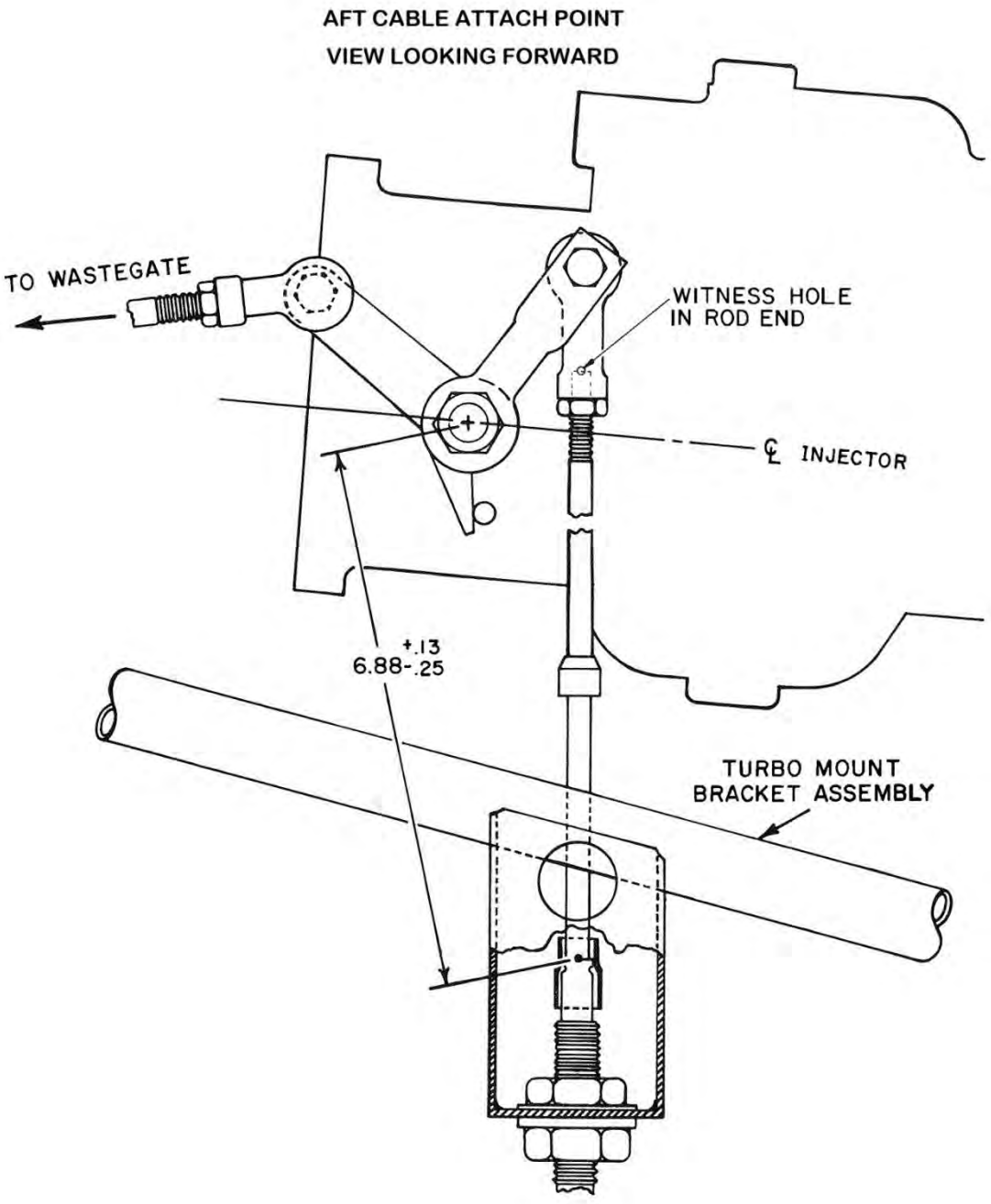

Figure 13-24. Aft Cable Attach Point

Visit www.enstromhelicopter.com for instructions to order an original manual and to register for email notification of updates.

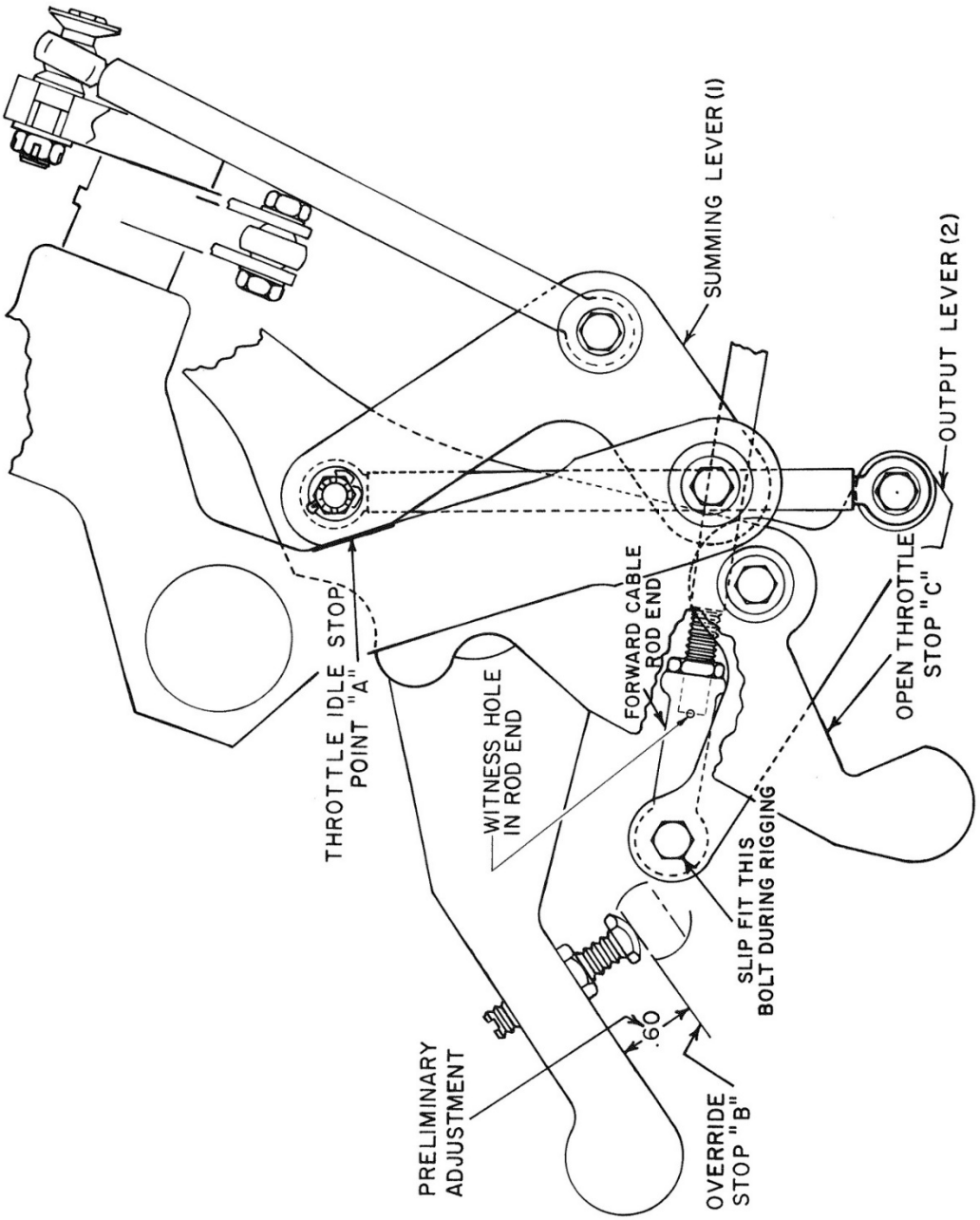

Figure 13-25. Correlator Idle Stop Position

UNCONTROLLED COPY WHEN DOWNLOADED OR PRINTED

Visit www.enstromhelicopter.com for instructions to order an original manual and to register for email notification of updates.

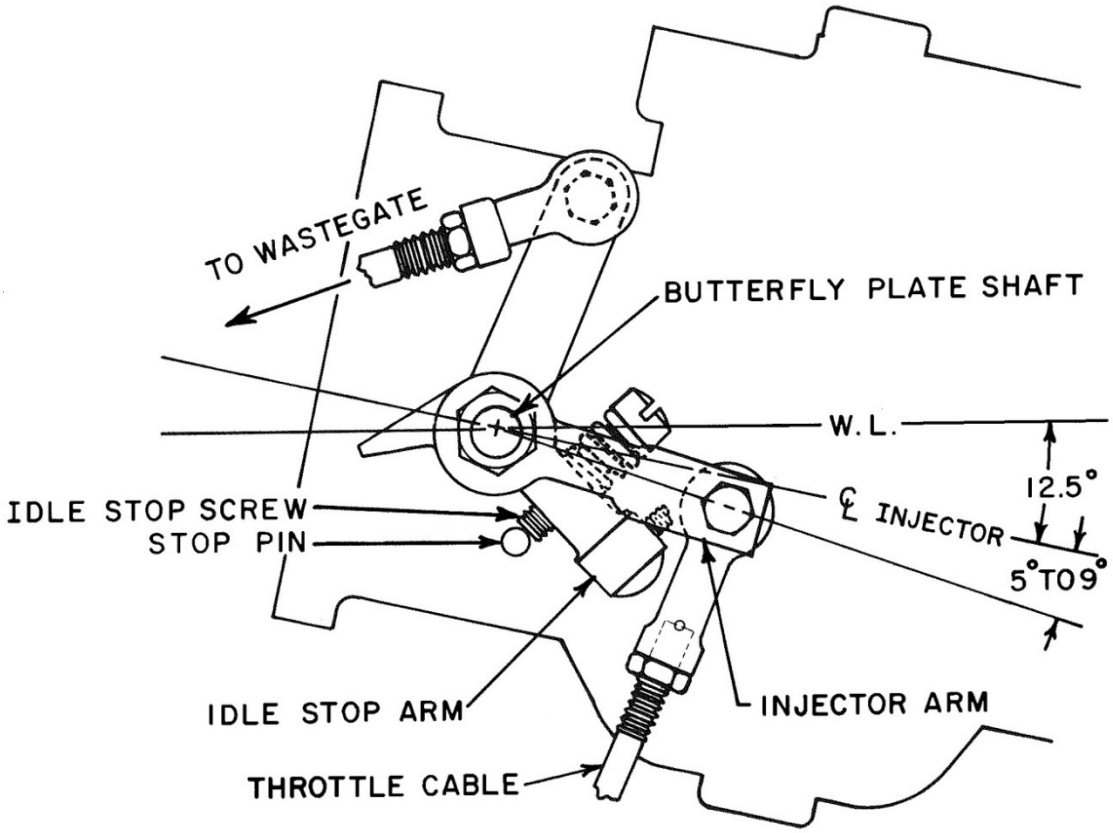

Figure 13-26. Fuel Servo Throttle Bellcrank

UNCONTROLLED COPY WHEN DOWNLOADED OR PRINTED

Visit www.enstromhelicopter.com for instructions to order an original manual and to register for email notification of updates.

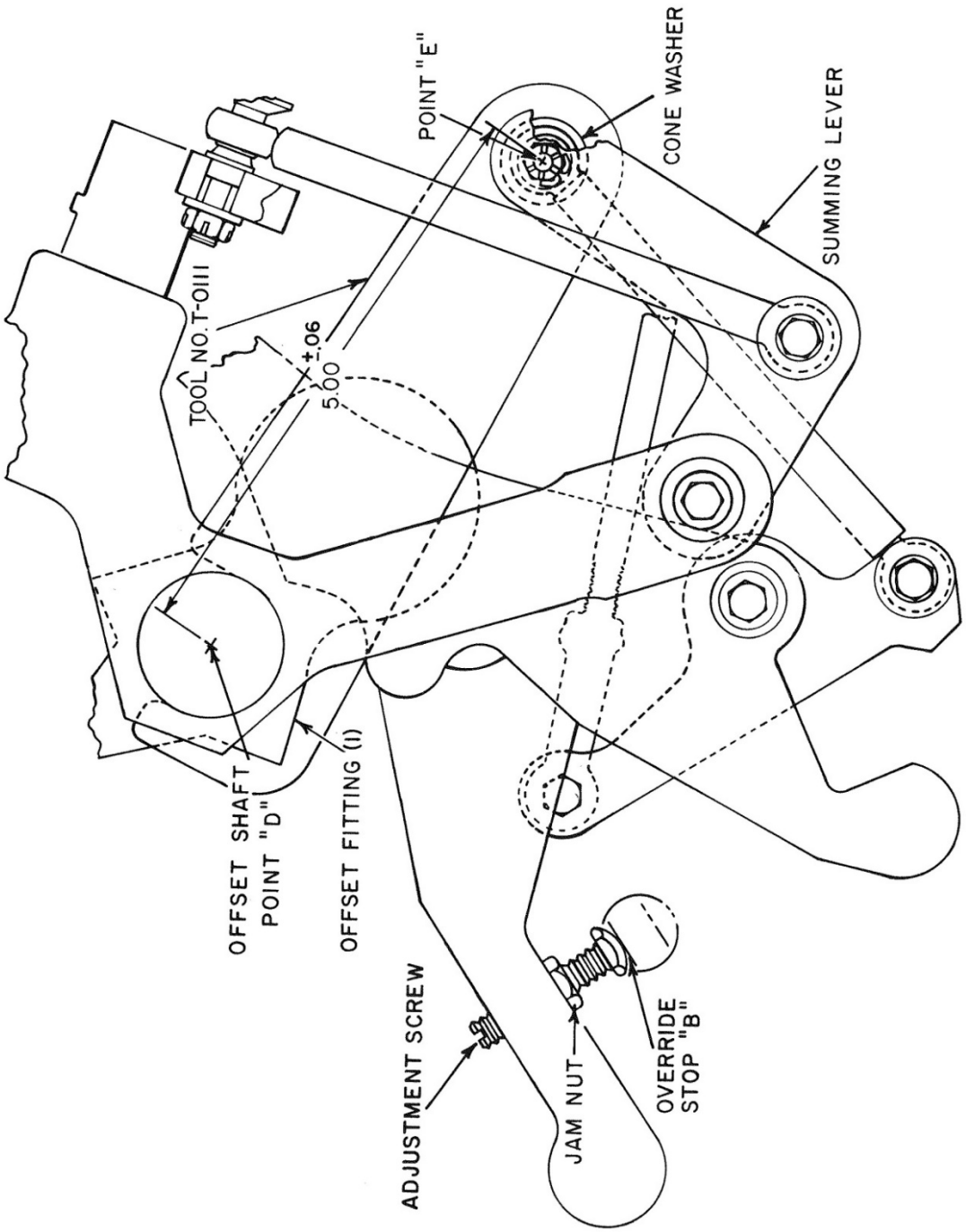

Figure 13-27. Override Stop Adjustment

Visit www.enstromhelicopter.com for instructions to order an original manual and to register for email notification of updates.

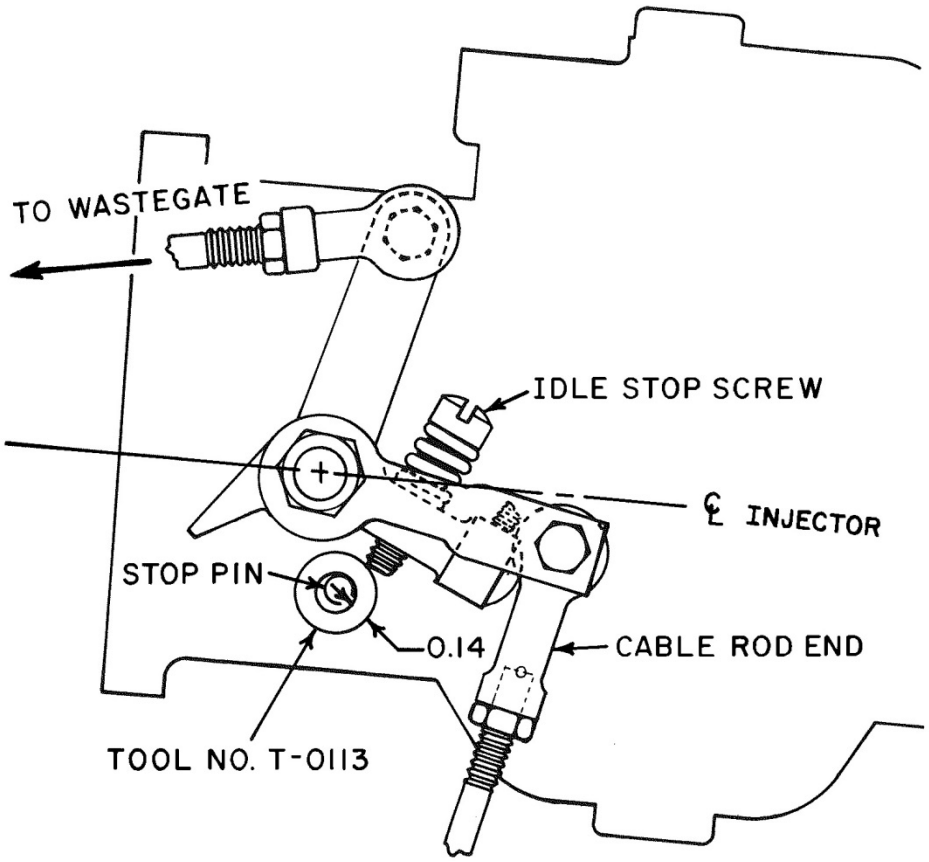

Figure 13-28. Fuel Servo with Tool No. T-0113 Installed

Visit www.enstromhelicopter.com for instructions to order an original manual and to register for email notification of updates.

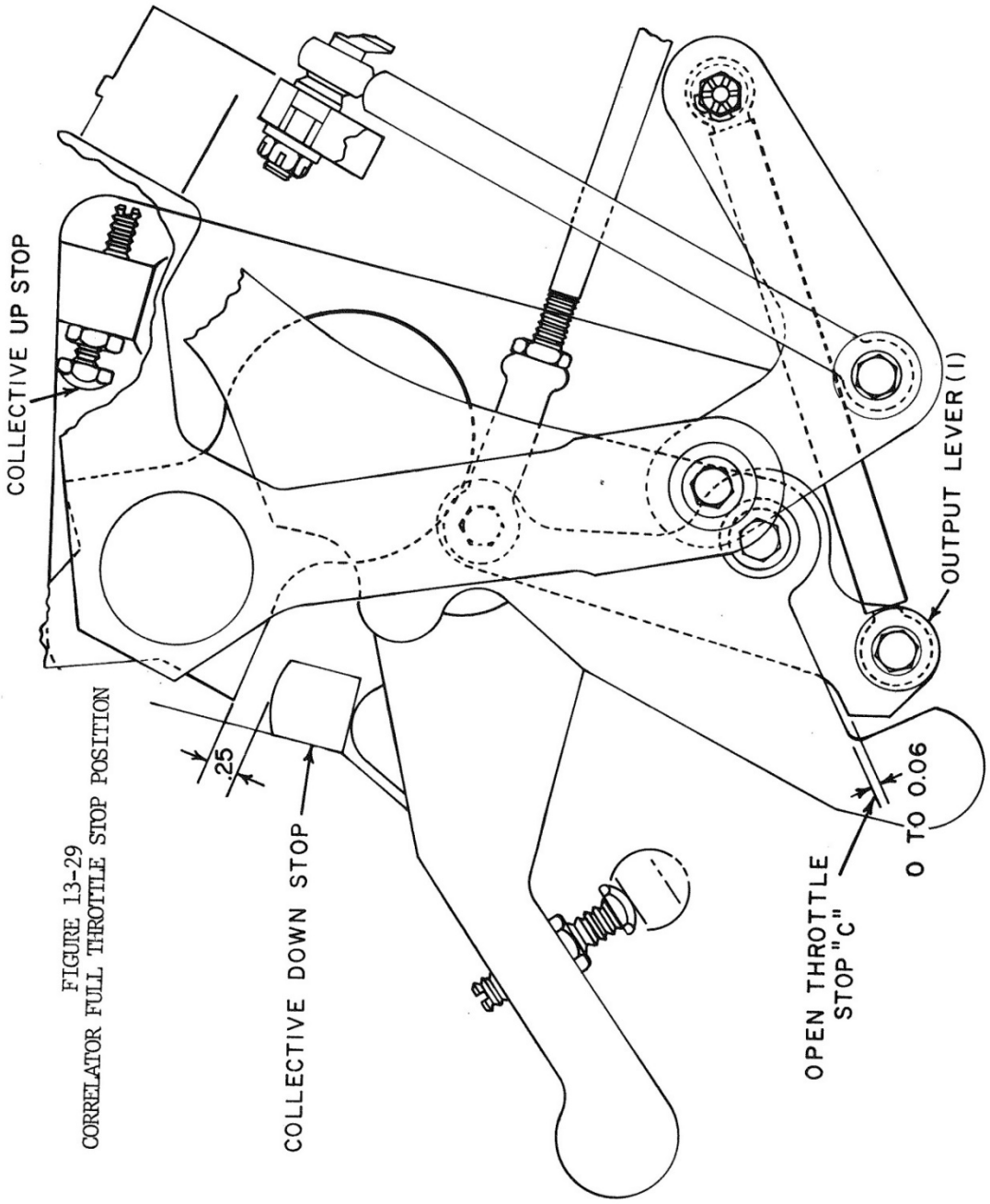

Figure 13-29. Correlator Full Throttle Stop Position

Visit www.enstromhelicopter.com for instructions to order an original manual and to register for email notification of updates.

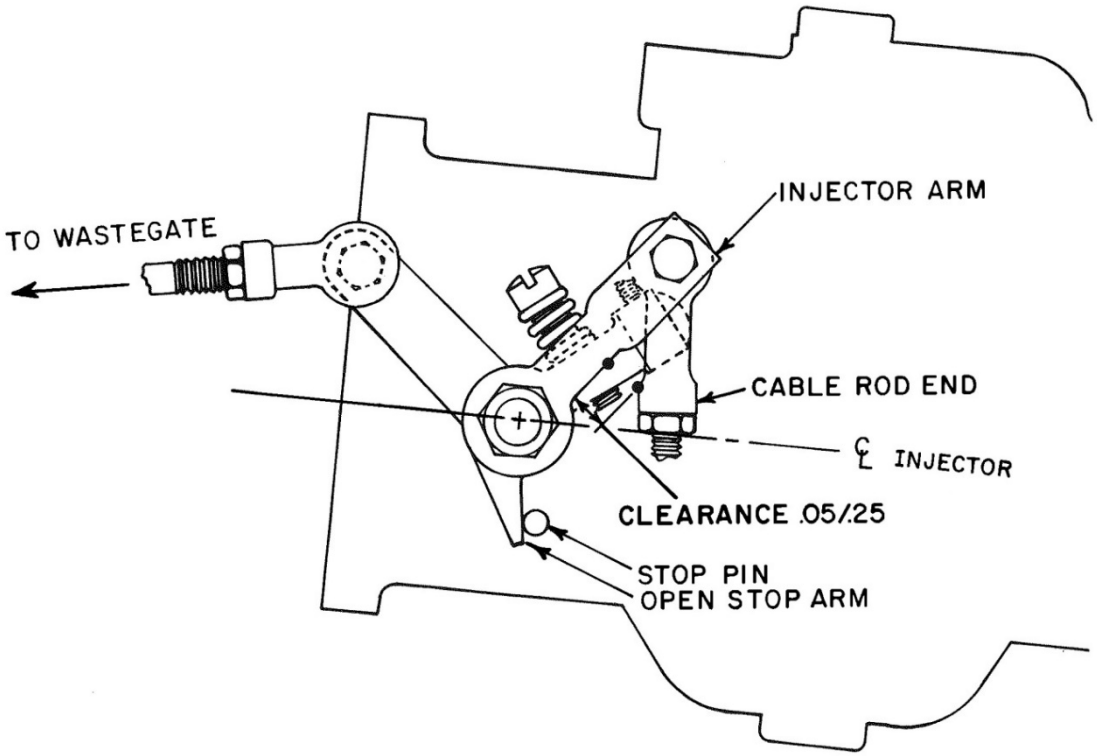

Figure 13-30. Fuel Servo Full Throttle Position

UNCONTROLLED COPY WHEN DOWNLOADED OR PRINTED

Visit www.enstromhelicopter.com for instructions to order an original manual and to register for email notification of updates.

SECTION 14

UTILITY SYSTEMS

TABLE OF CONTENTS

Paragraph	Description	Page
14-1	**Cabin Heat**	**MM-14-3**
	A. Description	MM-14-3
	B. Cabin Heating System – Troubleshooting	MM-14-3
.	C. Heater Valve Assembly	MM-14-3
	D. Heater Control Cable	MM-14-4
	E. Heater Shroud	MM-14-5

UNCONTROLLED COPY WHEN DOWNLOADED OR PRINTED

Visit www.enstromhelicopter.com for instructions to order an original manual and to register for email notification of updates.

INTENTIONALLY LEFT BLANK

UNCONTROLLED COPY WHEN DOWNLOADED OR PRINTED

Visit www.enstromhelicopter.com for instructions to order an original manual and to register for email notification of updates.

14-1 CABIN HEAT

A. Description

Warm air used for heating the cabin is derived from a heat exchanger mounted on the exhaust muffler. The air enters this system from the engine cooling shroud and is ducted by a flexible hose to the heat exchanger. Air flows to the heater control valve which is mounted on the aft side of the firewall and regulates the air flow into the cabin area. The control is located on the left hand side of the pilot's seat for easy access to vary the temperature by pushing in to the OFF position or out to the ON position. There are three heat delivery ducts inside the cabin. The main duct is located in the center of the seat structure, with two smaller ducts located just forward of the tail rotor control pedals on either side of the cabin floor.

B. Cabin Heating System – Troubleshooting

Problem	Cause	Required Action
Exhaust fumes enter cabin when cabin heat is applied.	Crack in exhaust stack or heat exchanger.	Replace stack, heat exchanger, or repair by welding.
Insufficient heat.	Flexible hoses forward of firewall off or loose.	Connect hoses and secure with clamps.
	Control linkage disconnected or loose.	Connect linkage properly.
	Defective heater shroud.	Replace or repair heater shroud.
	Defective valve assembly.	Replace or repair valve assembly.

C. Heater Valve Assembly

(1) Heater Valve – Removal

NOTE: See Figure 14-1, View A.

(a) Remove fiberglass seat deck from cabin.

(b) Disconnect the heater control cable (1) from the heater valve (2).

(c) Disconnect and remove hose (3) from aft side heater valve.

(d) Remove the attachment screws securing heater valve to hose divider (4) and firewall. Remove valve.

UNCONTROLLED COPY WHEN DOWNLOADED OR PRINTED

Visit www.enstromhelicopter.com for instructions to order an original manual and to register for email notification of updates.

(2) Heater Valve – Installation (See Figure 14-1, View A)

(a) Install heater valve (2) with valve control lever on top and align to hose divider (4) on firewall.

(b) Install attachment screws to secure valve to firewall, and torque screws.

(c) Connect heater control cable (1) to heater valve and adjust. See heater control cable installation.

(d) Connect hose (3) to aft side of heater valve and secure.

(e) Install fiberglass seat deck.

D. Heater Control Cable

(1) Heater Control Cable – Removal (See Figure 14-1, View A)

(a) Remove fiberglass seat deck.

(b) Disconnect control cable (1) at the heater valve (2).

(c) Disconnect cable clamp (6) from forward landing gear cross tube.

(d) Remove cable nut securing control knob to seat structure and pull cable out through front of seat structure.

(2) Heater Control Cable – Installation (See Figure 14-1, View A)

(a) Slide cable (1) through seat structure and install nut and lock washer on inboard side. Secure nut to mount cable control knob in place.

(b) Connect cable (1) to heater valve (2) and secure with clamp (5).

NOTE: Remove hose from aft end of heater valve (2) so valve damper is visible for cable adjustment.

(c) Adjust cable until valve is in closed position with 1/4” to 3/8” gap between seat structure and cable control knob with control knob pushed in.

NOTE: Adjustment is made by sliding cable sheath in or out at the cable clamp (5) on top side of heater control valve. Check that valve fully opens and closes after adjustment.

(d) Install hose and secure to aft side of control valve.

(e) Connect cable clamp (6) at landing gear cross tube.

(f) Install fiberglass seat deck and cushions.

UNCONTROLLED COPY WHEN DOWNLOADED OR PRINTED

Visit www.enstromhelicopter.com for instructions to order an original manual and to register for email notification of updates.

E. Heater Shroud

(1) Heater Shroud – Removal (See Figure 14-1, View B)

(a) Remove hoses (7) and (9) from heater shroud (8).

(b) Remove screws along top of heater shroud.

(c) Separate shroud and remove from heat exchanger.

(2) Heater Shroud – Installation (See Figure 14-1, View B)

(a) Install heater shroud (8) around heat exchanger with shroud seam on top.

(b) Install screws to secure shroud to heat exchanger.

(c) Connect hoses (7) and (9) to heater shroud and secure with hose clamps.

UNCONTROLLED COPY WHEN DOWNLOADED OR PRINTED

Visit www.enstromhelicopter.com for instructions to order an original manual and to register for email notification of updates.

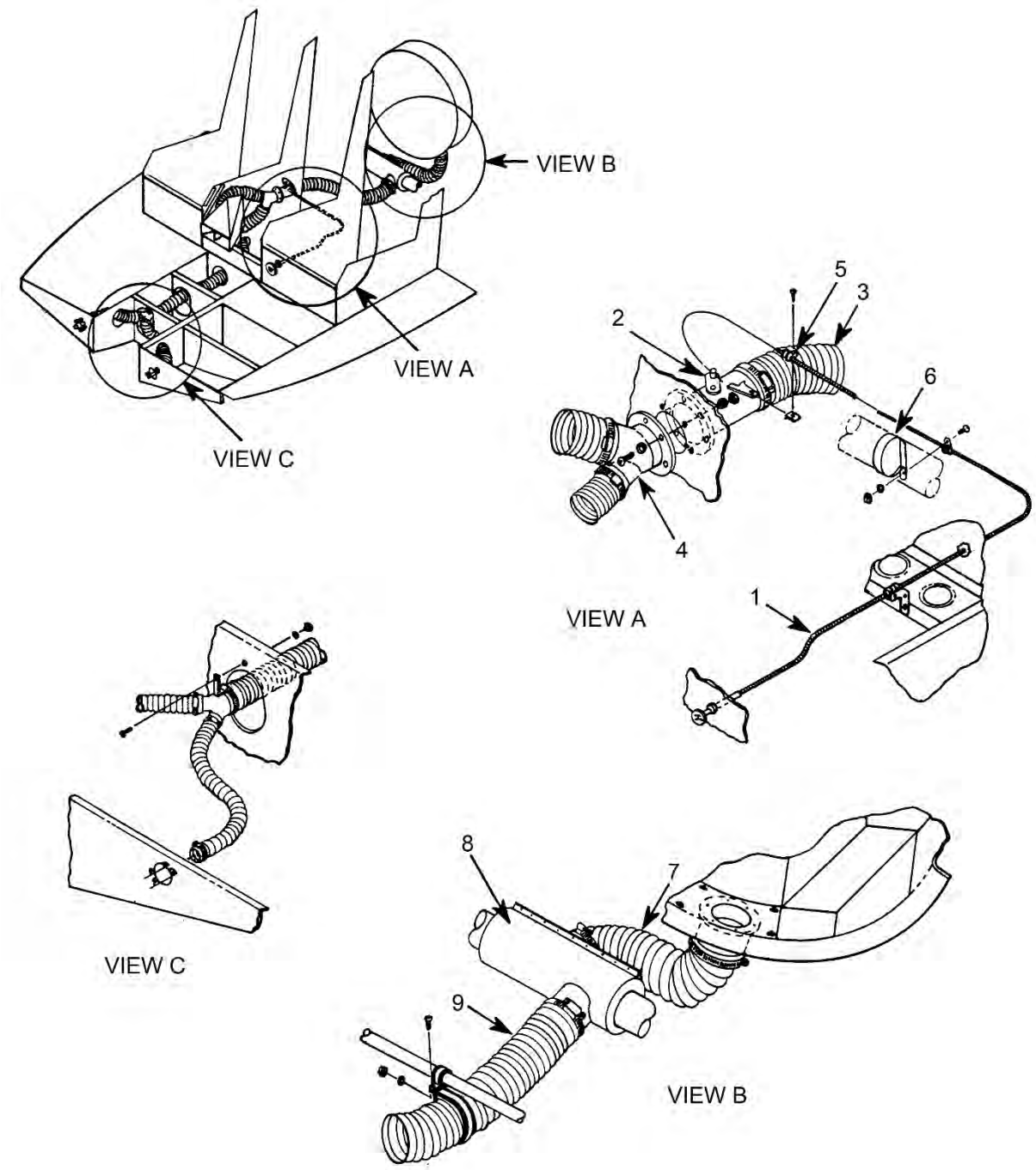

1.	Control Cable	4.	Hose Divider	7.	Hose
2.	Heater Valve	5.	Clamp	8.	Heater Shroud
3.	Hose	6.	Clamp	9.	Hose

Figure 14-1. Cabin Heating System

UNCONTROLLED COPY WHEN DOWNLOADED OR PRINTED

Visit www.enstromhelicopter.com for instructions to order an original manual and to register for email notification of updates.

SECTION 15

SUPPLEMENT PROCEDURES

15-1 INTRODUCTION

The F-28F (1986) and 280FX Series Maintenance Manual Supplement Procedures portion of the manual (Sections 15 through 25) provided information defining the differences between the 1986 F-28F and the 280FX models from the standard F-28F and 280F helicopters. (The manual was originally published as the *F-28F and 280F Maintenance Manual*. It is currently published as the *F-28F and 280F Series Maintenance Manual*.)

Over the course of recent manual revisions, several supplement sections (Sections 16 through 20 and 22 through 25) have been integrated into the original maintenance manual. Section 15 and Section 21, *Electrical Systems and Components,* are the only supplement sections that remain active.

UNCONTROLLED COPY WHEN DOWNLOADED OR PRINTED

Visit www.enstromhelicopter.com for instructions to order an original manual and to register for email notification of updates.

INTENTIONALLY LEFT BLANK

UNCONTROLLED COPY WHEN DOWNLOADED OR PRINTED

Visit www.enstromhelicopter.com for instructions to order an original manual and to register for email notification of updates.

SECTION 21

ELECTRICAL SYSTEMS AND COMPONENTS

TABLE OF CONTENTS

Paragraph	Description	Page
21-1	**General**	**MM-21-1**
21-2	**Exterior Lighting**	**MM-21-1**
	A. LED Forward and Aft Landing Lights	MM-21-1
	B. Combined Anticollision and Navigation Lights	MM-21-1
21-3	**Annunciator Panel**	**MM-21-3**
	A. Lamp Replacement – Annunciator Panel	MM-21-3
	B. Clutch Disengagement Warning Circuit	MM-21-3
	C. Low Fuel Pressure Warning Circuit	MM-21-3
	D. Low Rotor RPM Circuit	MM-21-4
	E. Hi/Lo Rotor RPM Circuit	MM-21-4
	F Overboost Circuit	MM-21-4
	G. Main and Tail Rotor Gearbox Chip Detectors	MM-21-4
21-4	**Anticollision and Navigation Lights, Annunciator Panel, and Landing Lights Troubleshooting**	**MM-21-6**
21-5	**Lamp/Assembly Replacement Guide Chart**	**MM-21-8**
21-6	**Ampere Load Conditions**	**MM-21-8**
21-7	**Hi/Lo Rotor RPM Warning System**	**MM-21-11**
	A. Signal Conditioning Unit	MM-21-11
	B. Removal	MM-21-11
	C. Inspection	MM-21-11
	D. Repair	MM-21-11
	E. Installation	MM-21-11
	F. Function Test	MM-21-11
21-8	**Schematic Diagrams**	**MM-21-14**
21-9	**Illuminated Panels**	**MM-21-33**

UNCONTROLLED COPY WHEN DOWNLOADED OR PRINTED

Visit www.enstromhelicopter.com for instructions to order an original manual and to register for email notification of updates.

INTENTIONALLY LEFT BLANK

UNCONTROLLED COPY WHEN DOWNLOADED OR PRINTED

Visit www.enstromhelicopter.com for instructions to order an original manual and to register for email notification of updates.

SECTION 21

ELECTRICAL SYSTEMS AND COMPONENTS

21-1. General – Reference Section 6 for Other Information

Updates to the electrical systems of the 280FX and F-28F include changes listed below:

- Combined anticollision and navigation lights and LED landing lights (Para. 21-2)
- Annunciator Panel 280FX and F-28F S/N 746 and subsequent (Para. 21-3)
- Hi/Lo rotor RPM warning system (Para. 21-7)
- Engine monitor 280FX and F-28F (Para. 7-21)
- Illuminated switch panel, radio panel, and collective control panel (Para. 21-9)

NOTE: Early F-28F aircraft do not have the annunciator panel but do have press-to-test lights for required items in Para. 21-3.

Refer to Paragraph 21-8 for the F-28F and 280FX electrical schematics.

21-2. Exterior Lighting

Refer to paragraph 21-4 for troubleshooting an inoperative LED landing light and refer to Paragraph 21-5 for replacement part numbers.

A. LED Forward and Aft Landing Lights

F-28F S/N 833 and subsequent and 280FX S/N 2167 and subsequent helicopters are equipped with LED landing lights (forward landing light standard for both models; aft landing light standard for 280FX, optional for F-28F). The installations are shown in Figure 21-1. Controls for landing light operation are provided by a forward landing light switch and an aft landing light switch on the pilot collective and co-pilot collective (if installed). The switches and location are shown in Figure 21-3.

Annunciation for the two modes of operation (“On” and “Pulse”) of the forward landing light is provided by an annunciator light installed in the upper left portion of the instrument console (Figure 21-4). The annunciator illuminates a green FWD LDG LT ON or FWD LDG LT PLS depending on the mode of operation. “On” annunciation of the aft landing light is also provided by an annunciator light installed next to the forward landing light annunciator. The annunciator illuminates a green AFT LDG LT ON when the light is in operation.

Both annunciators are readable in sunlight and include a discrete dimming feature that dims the annunciator when the PANEL LTS toggle switch located on the switch/circuit breaker panel is toggled ON.

B. Combined Anticollision and Navigation Lights

The 280FX and F-28F S/N 744 and subsequent are equipped with combined anticollision-navigation lights. These light assemblies are mounted on the outside of each vertical stabilizer, and the anti-collision light power supplies are located under the floor on either side of the cabin, as shown in Figure 21-1.

UNCONTROLLED COPY WHEN DOWNLOADED OR PRINTED

Visit www.enstromhelicopter.com for instructions to order an original manual and to register for email notification of updates.

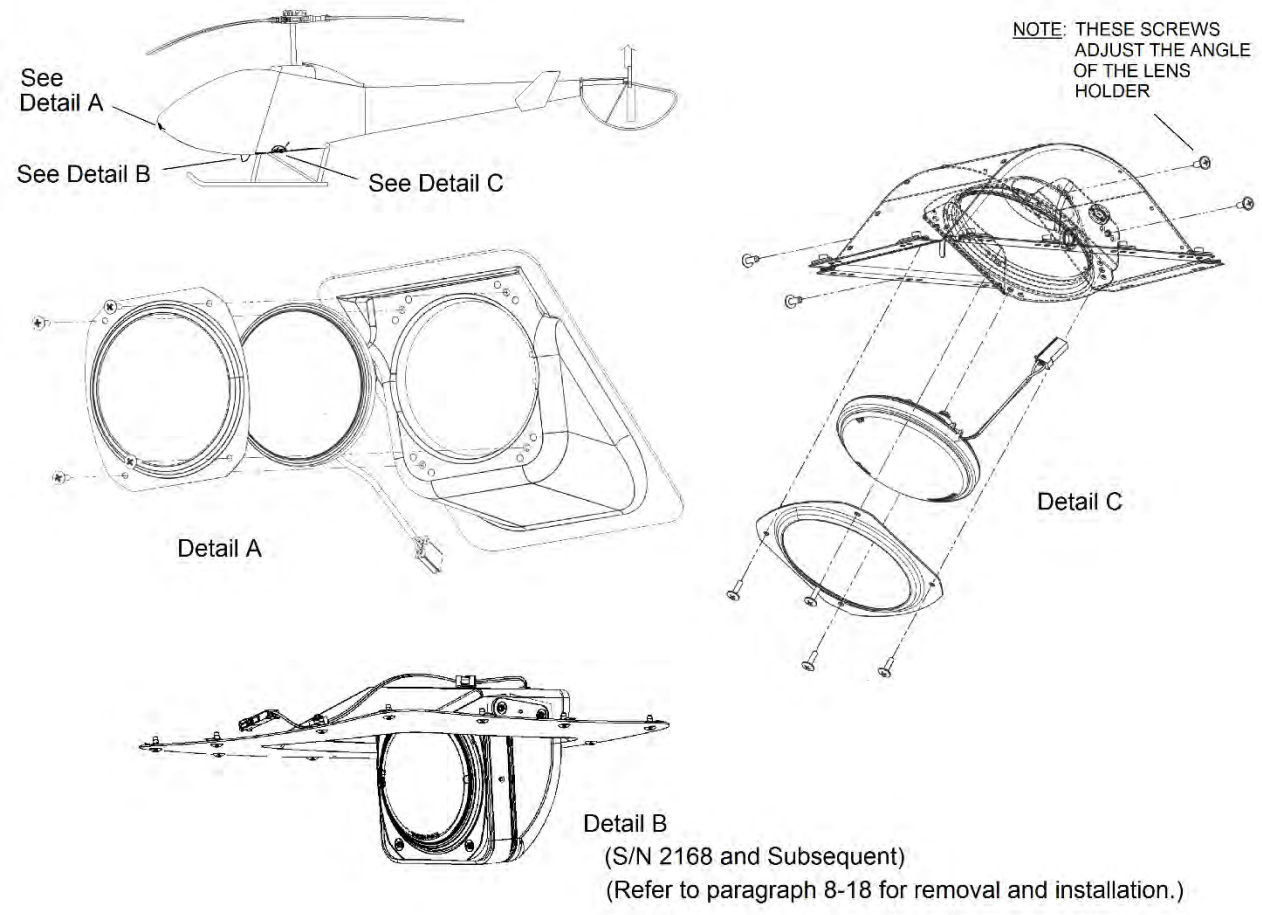

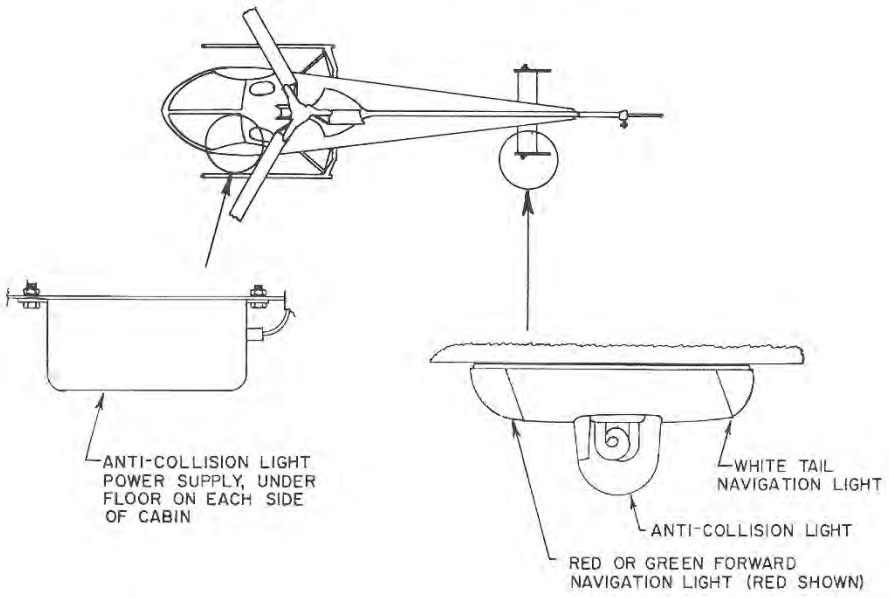

Figure 21-1. Forward and Aft Landing Light (280FX shown)
and Anti-Collision and Navigation Light Systems

Visit www.enstromhelicopter.com for instructions to order an original manual and to register for email notification of updates.

21-3. Annunciator Panel

All of the warning and caution lights for 280FX helicopters are contained in an annunciator panel, which is located at the top of the instrument panel. On early production helicopters, the warning lights include LOW ROTOR RPM, CLUTCH ENGAGE, and LOW FUEL PRESS; the caution lights include OVERBOOST, MRGB CHIP, and TRGB CHIP. On later production helicopters, STARTER RELAY is added to the warning lights and LOW VOLTAGE is added to the caution lights.

The annunciator panel for F-28F helicopters was optional equipment starting with S/N 746. Later F-28F production helicopters incorporated the annunciator panel with all eight segments as standard equipment.

For aircraft equipped with the Hi/Low Rotor RPM Warning System, ROTOR RPM replaces LOW ROTOR RPM in the annunciator panel.

Pressing the “press-to-test” switch at the extreme left of the panel will illuminate all of the indicator lights.

A. Lamp Replacement – Annunciator Panel

Each indicator light contains two lamps. These lamps can be replaced as follows:

(1) Press inward on the right edge of the indicator until indicator opens.

(2) Swing indicator fully open.

(3) Grasp base of lamp firmly and pull lamp out of socket.

(4) Insert replacement lamp and push into place.

(5) Swing indicator closed.

(6) Push on left side of indicator to close.

B. Clutch Disengagement Warning Circuit

The clutch disengagement warning circuit consists of a microswitch on the clutch plate which operates a red warning light in the annunciator panel. This switch is normally closed and completes a circuit to ground when the clutch is disengaged. When the clutch snaps overcenter into the engaged position, an arm on the actuating mechanism opens the switch, which turns out the light. The “normally open” side of this switch arms the rotor rpm circuit.

If the clutch disengagement light does not go out when the clutch is engaged, or if the light comes on in flight, this indicates that the clutch is misrigged or the clutch actuator cable needs servicing. The problem must be found and corrected before the aircraft is returned to service. Press to test warning indicator on F-28F.

C. Low Fuel Pressure Warning Circuit

The low fuel pressure warning circuit comprises a pressure switch in the fuel line between the electric boost pump and the engine-driven fuel pump which activates a red light in the annunciator panel. If the pressure in this fuel line drops below 15 psi, the switch will turn on the red light. This circuit provides the pilot with a warning if the electric boost pump should

UNCONTROLLED COPY WHEN DOWNLOADED OR PRINTED

Visit www.enstromhelicopter.com for instructions to order an original manual and to register for email notification of updates.

fail. This light does not indicate the condition of the engine-driven fuel pump. Press to test warning indicator on F-28F.

D. Low Rotor RPM Circuit

The low rotor rpm circuit comprises a magnetic sensor in the main rotor transmission, a signal conditioning unit behind the passenger's seat, an amber light in the annunciator panel, and a warning horn. The magnetic sensor is located in the forward portion of the main rotor transmission housing. It is positioned to sense the passage of the ring gear teeth. The signal is sent to a small unit located in the backrest of the passenger's seat. The unit reads the signal from the magnetic sensor and activates the light and the warning horn.

The system is armed by the same switch which activates the clutch disengagement light. Thus, the low rotor rpm light will be on only when the clutch disengaged light is out, and the main rotor rpm is below 334. In addition, the warning horn is wired through a position switch on the collective torque tube such that the horn will not operate with the collective fully down. The horn has a pulsing tone of 2900 Hz at 80-95 decibels.

After the engine is started, the following sequence should occur in the annunciator panel. The red clutch disengagement light will be on until the clutch is engaged. When the clutch snaps into the engaged position, the red clutch disengagement light will go out and the amber low rotor rpm light will turn on. The low rotor rpm light will remain on until the rotor rpm exceeds 334. The horn will sound if the rotor rpm is below 334 and collective is raised off the lower stop.

This system is set to trigger the light and horn at 334 rpm ±1 rpm. The system can be adjusted with a potentiometer on the top of the signal conditioning unit. The position of the magnetic sensor was set at the factory and will need no readjustment. Contact Enstrom Product Support for service on the magnetic sensor. For electrical schematic see Diagram 21-4, for RPM adjustment on low rotor indicator see Figure 21-2.

E. Hi/Lo Rotor RPM Circuit

F-28F S/N 831 and subsequent and 280FX S/N 2136 and subsequent are equipped with a Hi/Lo Rotor RPM Circuit. Refer to paragraph 21-7 for maintenance procedures.

F. Overboost Circuit

The overboost circuit consists of a pressure switch behind the instrument panel and connected to the manifold pressure line which activates an amber warning light in the annunciator panel. The light will illuminate between 37.0 and 40.5 in-Hg manifold pressure. The light may be triggered by short pressure pulses which will not appear on the manifold pressure gauge. The manifold pressure gauge is the primary manifold pressure indicator, while the annunciator panel is a secondary indicator. The manifold pressure gauge should be used to determine severity of any overboost.

G. Main and Tail Rotor Gearbox Chip Detectors

The main and tail rotor gearboxes are equipped with magnetic chip detectors which operate amber lights in the annunciator panel. There is a separate circuit and light for each gearbox. When a chip attaches to the chip detector, it completes a circuit to ground, turning on the light. Further information regarding the chip detection system, refer to Paragraph 4-62, Paragraph 10-5.1, and Paragraph 11-6.1.

UNCONTROLLED COPY WHEN DOWNLOADED OR PRINTED

Visit www.enstromhelicopter.com for instructions to order an original manual and to register for email notification of updates.

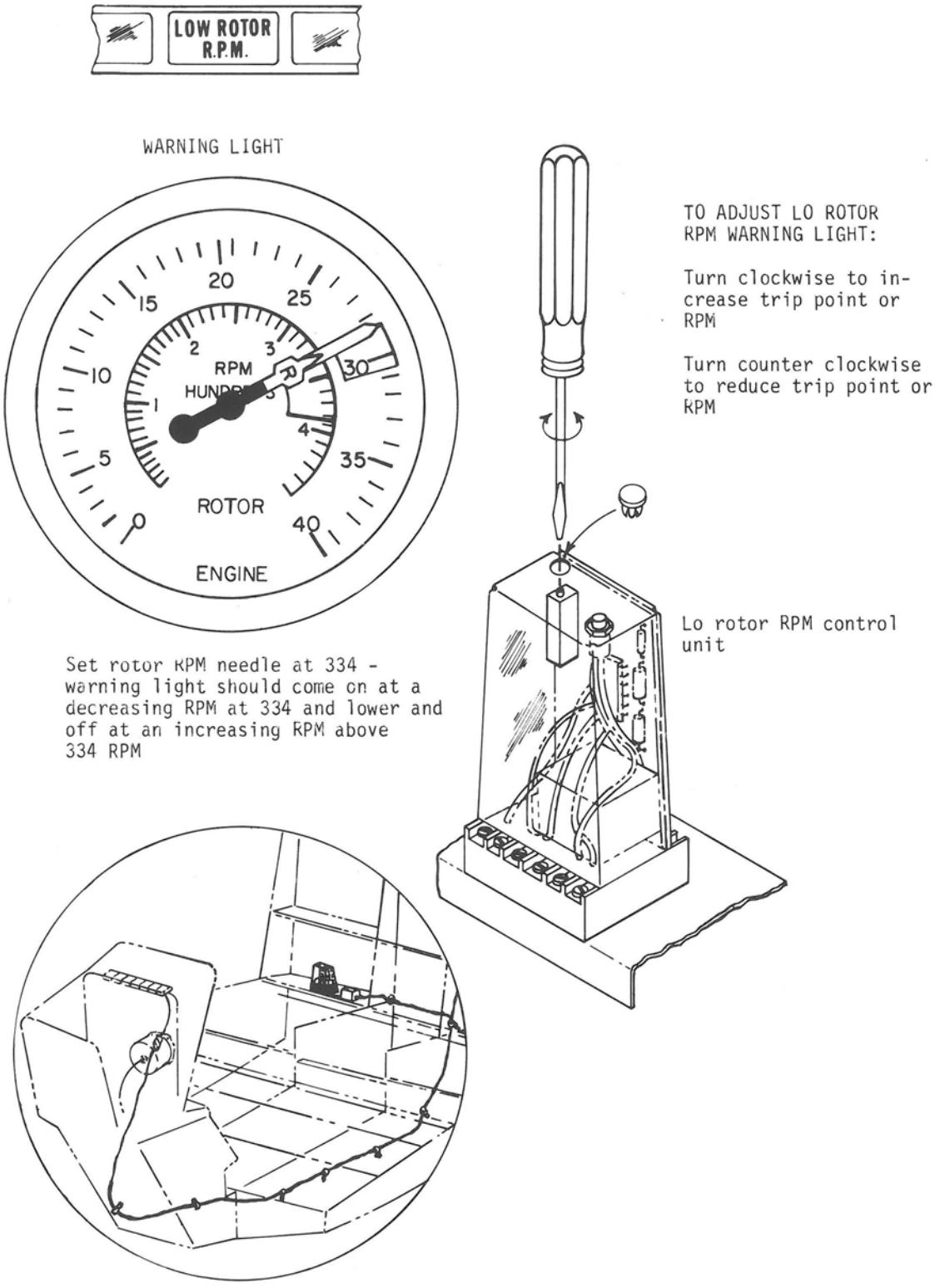

Low Rotor RPM Indicator Adjustment
(F-28F S/N 830 and prior; 280FX S/N 2136 and prior)

Figure 21-2

Visit www.enstromhelicopter.com for instructions to order an original manual and to register for email notification of updates.

21-4. Anticollision and Navigation Lights, Annunciator Panel, and Landing Lights Troubleshooting

PROBABLE CAUSE	REQUIRED ACTION
Anti-collision lights both out with master on and anti-collision light switch on:	
Circuit breaker tripped	Reset circuit breaker. Check for wire shorted to ground.
Open circuit	Check all connections and continuity of wiring harness.
One anti-collision light out:	
Open circuit	Check all connections and continuity of wiring harness.
Failed power supply	Check for audible tone from power supply. If no tone, replace power supply.
Lamp burned out	Replace lamp.
Navigation lights all out with master on and navigation light switch on:	
Circuit breaker tripped	Reset circuit breaker, check for wire shorted to ground.
Open circuit	Check all connections and continuity of wiring harness.
One navigation light out:	
NOTE: F-28F S/N 833 and subsequent and 280FX S/N 2148 and subsequent are equipped with LED position lights.	
Lamp burned out	Replace lamp or assembly, as applicable.
Open circuit	Check all connections and continuity of wiring harness.
Annunciator panel does not illuminate when “press-to-test” is pressed and “panel light” switch is off:	
Master off	Turn master on
Circuit breaker tripped	Reset “Inst.” circuit breaker
Open circuit	Check wiring harness connector inside console. Also check wiring harness connections.
NOTE: For F-28F models, test each press to test indicator individually and take indicated required action.	
Annunciator panel will not illuminate when “press-to-test” is pressed and panel light switch is on:	
Master off	Turn master on.
Dimmer switch fully dimmed	Brighten lights.
Circuit breaker tripped	Reset panel lights circuit breaker.
One indicator will not illuminate when “press-to-test” is pressed:	
Both lamps burned out	Replace both lamps.
Open circuit in warning circuit	Check connections and wiring in circuit

Visit www.enstromhelicopter.com for instructions to order an original manual and to register for email notification of updates.

PROBABLE CAUSE	REQUIRED ACTION
One indicator is dim when “press-to-test” is pressed:	
One lamp burned out	Replace lamp. If no change, reinstall first lamp and replace second lamp.
Low rotor rpm circuit, including horn, doesn’t work:	
Blown fuse	Replace 1 amp fuse, in line between low rotor signal conditioning unit and 12-volt bus.
Open circuit	Check all connections and continuity of wiring harness
NOTE: The troubleshooting steps listed below apply to F-28F S/N 831 and subsequent and 280FX S/N 2136 and subsequent.	
Annunciator panel rotor RPM circuit, including horn and tone, doesn’t work:	
Blown fuse	Replace 1 amp fuse, in line between signal conditioning unit and bus.
Open circuit	Check all connections and continuity of wiring harness.
ROTOR RPM light does not extinguish:	
Open circuit	Check connections and continuity of wiring between the signal conditioner and the magnetic sensor.
Magnetic sensor improperly positioned	Remove the magnetic sensor inspection plug located on the front of the main rotor transmission. Ensure the gap between the ring gear and the magnetic sensor is between 0.030-0.045”/0.76-1.14 mm. Adjust the amount of shims under the head of the magnetic sensor as required. Replace the inspection plug.
Defective magnetic sensor	Using a multi-meter, check for 270-330 ohms across the leads. Replace the magnetic sensor if the ohm check is outside the 270-330 ohm range or if inspection of the system components and wiring isolates the problem to the magnetic sensor.
NOTE: F-28F S/N 833 and subsequent and 280FX S/N 2167 and subsequent are equipped with LED landing light assemblies.	
LED Landing Lights, Forward and Aft (for F-28F, if equipped)	
LED burned out (D52, forward; D53, aft)	Replace LED, as applicable
Landing light breaker open or failed (CB45, forward; CB46, aft)	Reset or replace breaker
Collective control switch failed Forward: (SW121, pilot; SW120, co-pilot) Aft: (SW 133, pilot; SW 132, co-pilot)	Replace landing light switch

Visit www.enstromhelicopter.com for instructions to order an original manual and to register for email notification of updates.

21-5. Lamp/Assembly Replacement Guide Chart

Lamp Location	Quantity	Manufacturer	Number	
			12 volt	28 volt
NOTE: F-28F S/N 832 and prior; 280FX S/N 2147 and prior are equipped with incandescent position light/strobe assemblies at the time of manufacture.				
Anti-collision strobe	2	Whelen	02-0250276-00	02-0250276-00
Left and right position	2	Whelen	34-0414020-65	34-0428020-65
NOTE: F-28F S/N 833 and subsequent; 280FX S/N 2148 and subsequent are equipped with LED position light/strobe assemblies at the time of manufacture.				
Anti-collision strobe	2	Whelen	N/A	36-0050626-01
LED Left and right position (LED assembly only)	1	Whelen	N/A	01-0271789-03 (green)
	1		N/A	01-0271789-04 (red)
Anti-collision strobe/LED Left and right position (Complete assembly)	1	Whelen	N/A	01-0790340-03 (green)
	1		N/A	01-0790340-04 (red)
Tail navigation	2	Whelen	34-0412070-63	34-0428070-64
Annunciator Panel	12*	G.E.	330 (MS25237-330)	327 (MS25237-327)
* 2 lamps per indicator				
NOTE: F-28F S/N 833 and subsequent; 280FX S/N 2167 and subsequent are equipped with LED landing light assemblies at the time of manufacture.				
Landing Light (forward)	1	AeroLEDs	N/A	28-19132-1
Landing Light (aft; F-28F, if equipped)	1	Whelen	N/A	28-19132-3

21-6. Ampere Load Conditions

NOTE

Table 21-1 and Table 21-2 provide the ampere load conditions for earlier F-28F and 280FX production and are not to be referenced for current production. Due to the variations in avionic installations, current production F-28F (S/N 830 and subsequent) and 280FX (S/N 2135 and subsequent) electrical load analysis tables are omitted from this manual but are documented and maintained with the build records for each aircraft manufactured. Contact Enstrom Product Support to inquire about the ampere load conditions for your aircraft.

UNCONTROLLED COPY WHEN DOWNLOADED OR PRINTED

Visit www.enstromhelicopter.com for instructions to order an original manual and to register for email notification of updates.

Table 21-1. 280FX Flight Ampere Load Conditions

NOTE: The information in this table applies to early production (see paragraph 21-6 NOTE).

ELECTRICAL DEVICE	DAY					NIGHT						
	A[1]	B	C	D	E	F[2]	G	H	I	J	K	L
Boost Pump	5.5	5.5	5.5	5.5	5.5	5.5	5.5	5.5	5.5	5.5	5.5	5.5
Longitudinal Trim[3]	-	6.0	-	6.0	-	-	6.0	-	6.0	-	6.0	-
Lateral Trim[3]	-	-	6.0	-	6.0	-	-	6.0	-	6.0	-	-
Radio, Transmit[3]	-	6.0	6.0	-	-							
Radio, Receive	0.8	0.8	0.8	0.8	0.8	0.8	0.8	0.8	0.8	0.8	0.8	0.8
Transponder	1.8	1.8	1.8	1.8	1.8	1.8	1.8	1.8	1.8	1.8	1.8	1.8
Loran-C	2.3	2.3	2.3	2.3	2.3	2.3	2.3	2.3	2.3	2.3	2.3	2.3
Instrument Cluster[4]	0.64	0.64	0.64	0.64	0.64	0.64	0.64	0.64	0.64	0.64	0.64	0.64
Master Relay	1.0	1.0	1.0	1.0	1.0	1.0	1.0	1.0	1.0	1.0	1.0	1.0
Anticollision Lights	3.4	3.4	3.4	3.4	3.4	3.4	3.4	3.4	3.4	3.4	3.4	3.4
Navigation Lights	-	-	-	-	-	8.2	8.2	8.2	8.2	8.2	8.2	8.2
Panel Lights	-	-	-	-	-	2.0	2.0	2.0	2.0	2.0	2.0	2.0
Forward Landing Light[5]	-	-	-	-	-	-	-	-	-	-	20.8	20.8
Aft Landing Light[5]	-	-	-	-	-	-	-	-	-	-	3.14	3.14
TOTAL	15.44	27.44		21.44		25.64	37.64		31.64		61.58	49.53

NOTES:
1 Flight condition ‘A’ is normal day cruise
2 Flight condition ‘B’ is normal night cruise
3 Device subject to intermittent use
4 Including graphic engine monitor and low rotor rpm circuit
5 Device subject to short duration (5 minutes)

The above load conditions include all standard electrical equipment for the 280FX helicopter. If other equipment is added, the load conditions above must be modified. F-28F loads same as indicated in Section 6-15, page MM-6-27.

UNCONTROLLED COPY WHEN DOWNLOADED OR PRINTED

Visit www.enstromhelicopter.com for instructions to order an original manual and to register for email notification of updates.

Table 21-2. F-28F/280FX Flight Ampere Load Conditions – 28 Volt System

NOTE: The information in this table applies to early production (see paragraph 21-6 NOTE).

ELECTRICAL DEVICE	DAY					NIGHT						
	A	B	C	D	E	F	G	H	I	J	K	L
Nav Lights @ 0.805 amps ea	-	-	-	-	-	3.22	3.22	3.22	3.22	3.22	3.22	3.22
Boost Pump	2.75	2.75	2.75	2.75	2.75	2.75	2.75	2.75	2.75	2.75	2.75	2.75
Long. Trim *	-	2.0	-	2.0	-	-	2.0	-	2.0	-	2.0	-
Lat. Trim *	-	-	2.0	-	2.0	-	-	2.	-	2.0	-	2.0
Radio – Transmit *	-	1.75	1.75	-	-	-	1.75	1.75	-	-	1.75	-
Radio – Receive	0.3	0.3	0.3	0.3	0.3	0.3	0.3	0.3	0.3	0.3	0.3	0.3
Instrument Cluster	0.07	0.07	0.07	0.07	0.07	0.07	0.07	0.07	0.07	0.07	0.07	0.07
Master Relay	0.5	0.5	0.5	0.5	0.5	0.5	0.5	0.5	0.5	0.5	0.5	0.5
Anti-Collision	3.5	3.5	3.5	3.5	3.5	3.5	3.5	3.5	3.5	3.5	3.5	3.5
Panel Lights	-	-	-	-	-	1.0	1.0	1.0	1.0	1.0	1.0	1.0
Forward Landing Light	-	-	-	-	-	-	-	-	-	-	8.93	8.93
Aft Landing Light	-	-	-	-	-	-	-	-	-	-	8.93	8.93
Landing Light Relay	-	-	-	-	-	-	-	-	-	-	0.11	0.11
TOTAL	7.12	11.87		9.12		11.34	15.09		13.34		33.06	29.31

NOTES: Flight condition ‘A’ is normal day cruise
Flight condition ‘B’ is normal night cruise
* Denotes intermittent use
Denotes short duration use (5 min.)

UNCONTROLLED COPY WHEN DOWNLOADED OR PRINTED

Visit www.enstromhelicopter.com for instructions to order an original manual and to register for email notification of updates.

21-7. Hi/Lo Rotor RPM Warning System

The Hi/Lo Rotor RPM Warning System consists of the P/N ECD4079-1 Hi/Lo Rotor RPM switch (signal conditioning unit), a ROTOR RPM warning light, a magnetic sensor, microswitches (S19 and S24), a lamp test switch (S25), warning horn, and a warning tone generator interfaced with the audio panel. The magnetic sensor, located in the forward portion of the main rotor transmission housing, is positioned to sense the passage of the ring gear teeth. A signal is sent to the signal conditioning unit, which activates the ROTOR RPM warning light on the annunciator panel, an audible warning horn, and a tone in the audio system headsets when the main rotor rpm is below 332 RPM or above 385 RPM. The signal conditioning unit is also activated by switch (S24) on the clutch actuator mechanism. The ROTOR RPM warning light, horn, and tone will be on when the CLUTCH ENGAGE light is out, and the main rotor rpm is below 332 RPM or above 385 RPM. A microswitch (S19), located on the collective torque tube behind the pilot's seat, deactivates the warning horn and tone when the collective controls are on the down stop. The annunciator panel press-to-test switch (S25) will illuminate the ROTOR RPM warning light for test purposes when the switch (S25) is pressed.

A. Signal Conditioning Unit

The signal conditioning unit, located behind the passenger's back cushion, reads the signal from the magnetic pickup and activates the ROTOR RPM warning light, and audio horn and tone. The wiring schematic diagram of the Hi/Lo Rotor RPM Warning System is detailed in Diagram 21-5 Sheet 3.

B. Removal – Signal Conditioning Unit

(1) Ensure all electrical power is off.

(2) Remove the back cushions and seatback access panel.

(3) Unplug the electrical connector from the signal conditioning unit.

(4) Remove the four screws mounting the signal conditioning unit to the bulkhead.

(5) Remove the signal conditioning unit.

C. Inspection – Signal Conditioning Unit

(1) Inspect the signal conditioning unit for damage, security of installation, and proper operation.

D. Repair – Signal Conditioning Unit

(1) Replace the signal conditioning unit if damaged or the unit fails to activate the light and horn or the unit cannot be set to activate at rotor speeds below 332 RPM and above 385 RPM.

UNCONTROLLED COPY WHEN DOWNLOADED OR PRINTED

Visit www.enstromhelicopter.com for instructions to order an original manual and to register for email notification of updates.

(2) The signal conditioning unit has been adjusted at the factory to activate at rotor speeds below 332 RPM or above 385 RPM. The unit should not need readjustment, but if it does, the operator may adjust the LO or HI potentiometers located on the top of the unit.

a. Turn the LO adjustment counter clockwise to reduce the low-end (i.e. 332 RPM) activating rpm and clockwise to increase the low-end (i.e. 332 RPM) activating rpm.

b. Turn the HI adjustment counter clockwise to reduce the high-end (i.e. 385 RPM) activating rpm and clockwise to increase the high-end (i.e. 385 RPM) activating rpm.

E. Installation – Signal Conditioning Unit

(1) Install the signal conditioning unit by securing the unit onto the bulkhead with four screws, washers, and nuts.

(2) Plug the electrical connector into the signal conditioning unit.

(3) Replace the seatback access panel and back cushions.

F. Functional Test – Hi/Lo Rotor Rpm Warning System

(1) Apply electrical power to the aircraft. Check the CLUTCH ENGAGE light is illuminated and the ROTOR RPM light is not illuminated.

(2) Engage the belt clutch. Check the ROTOR RPM light is illuminated and the CLUTCH ENGAGE light is not illuminated.

(3) Push the TEST button adjacent to the annunciator panel. Check that the ROTOR RPM and CLUTCH ENGAGE lights are illuminated. Release the button. (The ROTOR RPM light will remain illuminated with the clutch engaged.)

(4) Raise the collective controls off of the down stop. Check the ROTOR RPM horn and tone activate.

(5) Place the collective controls against the down stop. Check the ROTOR RPM horn and tone deactivate.

(6) Carefully disengage the belt clutch.

WARNING

The following checks are to be performed by authorized personnel.

UNCONTROLLED COPY WHEN DOWNLOADED OR PRINTED

Visit www.enstromhelicopter.com for instructions to order an original manual and to register for email notification of updates.

(7) Run up the aircraft in accordance with the operator's manual. Check the CLUTCH ENGAGE warning light extinguishes and the ROTOR RPM light illuminates when the clutch is engaged.

(8) Increase the power to bring rotor up to 334 rpm and check the ROTOR RPM warning light extinguishes at 333 ± 1 rpm. If the light does not illuminate or extinguish at 333 ± 1 rpm, refer to paragraph D, step (2)a for adjustment.

WARNING

The following test procedure requires flying the aircraft in an autorotation. The test should be conducted by an appropriately rated pilot using appropriate safety precautions.

(9) Fly the aircraft to an altitude and location where an autorotation can be safely performed and recovered.

(10) Enter a stabilized autorotation and allow the rotor RPM to build to the upper red line, 385 RPM

CAUTION

Rotor RPM can build very quickly in autorotation. Use care when approaching the upper red line.

NOTE

The aircraft will have to be moderately heavy to achieve a high enough autorotation RPM. An accelerated maneuver, such as a turn or flare, may also be required to increase the RPM.

(11) Check that the ROTOR RPM warning light illuminates above 385 ± 2 RPM. Do not allow the rotor RPM to exceed 390.

NOTE

If the collective is fully down, the horn and tone will not activate.

(12) Bring RPM down. Check that the ROTOR RPM warning light extinguishes below 385 ± 2 RPM.

(13) If the warning light does not illuminate or extinguish at 385 ± 2 RPM, refer to paragraph D, step (2)b for adjustment.

(14) Check the operation of the ROTOR RPM and CLUTCH ENGAGE warning lights during the shutdown procedure

UNCONTROLLED COPY WHEN DOWNLOADED OR PRINTED

Visit www.enstromhelicopter.com for instructions to order an original manual and to register for email notification of updates.

21-8. Schematic Diagrams

Table 21-3. List of Diagrams

Diagram 21-1. 12 Volt Power Distribution – 280FX

Diagram 21-2. 12 Volt Power Distribution – F-28F

Diagram 21-3. 24 Volt Power Distribution – F-28F and 280FX

Diagram 21-4. Annunciator Panel Schematic – F-28F S/N 830 and prior and 280FX S/N 2135 and prior

Diagram 21-5. 24 Volt Power Distribution – F-28F S/N 831-832
280FX S/N 2136-2166

Note: Sheet 6 (EDM-700) applicable to:
F-28F S/N 831-832
280FX S/N 2140-2166

Note: Sheet 7 (LED Position Lights) applicable to:
280FX S/N 2148-2166

Diagram 21-6. 24 Volt Power Distribution – F-28F S/N 833 and subsequent
(begin page MM-21-37) 280FX S/N 2167 and subsequent

Diagram 21-7. 28 to 14 Volt Converter and Dual 14 Volt Power Sockets (Option)

UNCONTROLLED COPY WHEN DOWNLOADED OR PRINTED

Visit www.enstromhelicopter.com for instructions to order an original manual and to register for email notification of updates.

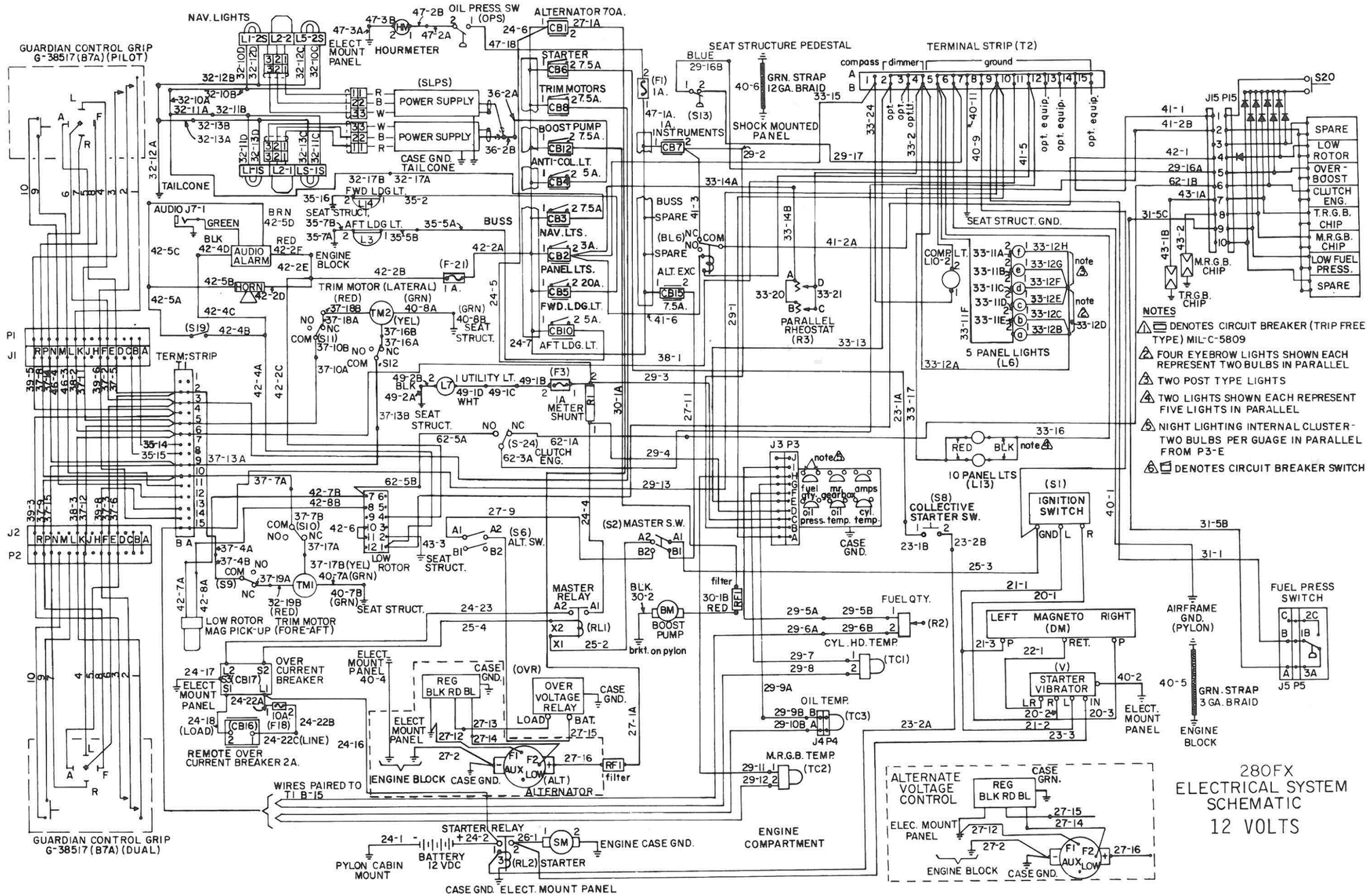

UNCONTROLLED COPY WHEN DOWNLOADED OR PRINTED

Visit www.enstromhelicopter.com for instructions to order an original manual and to register for email notification of updates.

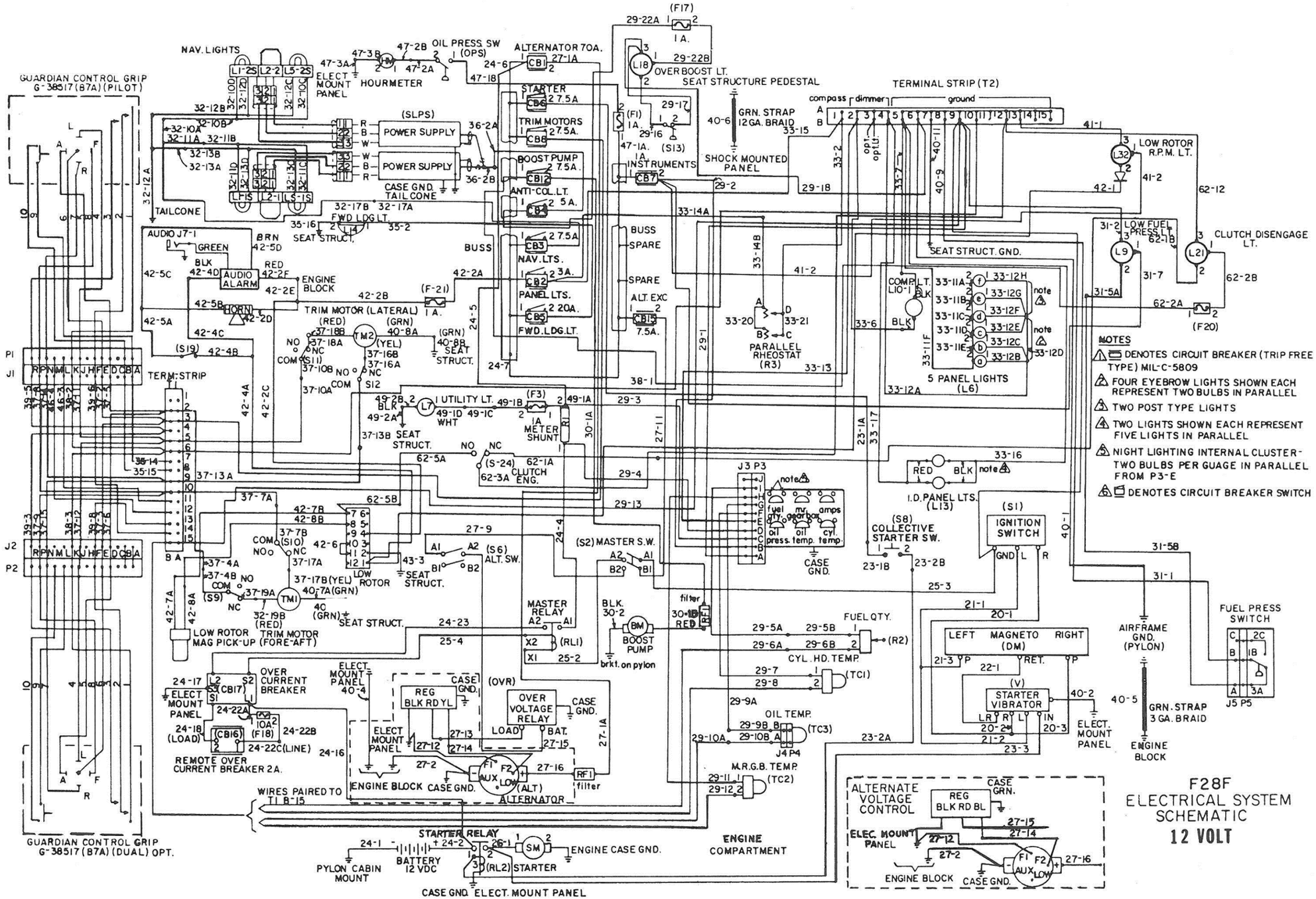

F28F
ELECTRICAL SYSTEM
SCHEMATIC
12 VOLT

UNCONTROLLED COPY WHEN DOWNLOADED OR PRINTED

Visit www.enstromhelicopter.com for instructions to order an original manual and to register for email notification of updates.

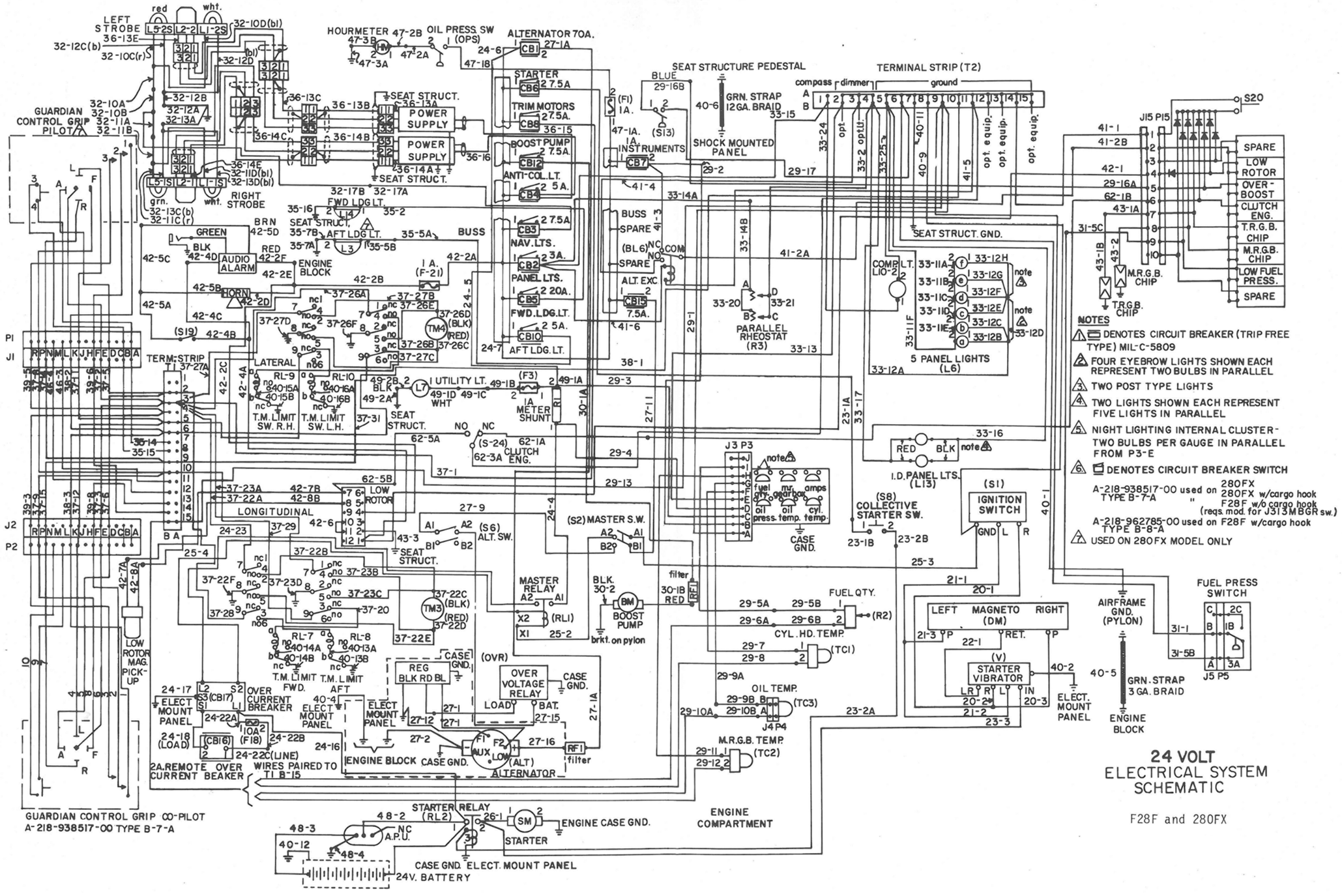

UNCONTROLLED COPY WHEN DOWNLOADED OR PRINTED

Visit www.enstromhelicopter.com for instructions to order an original manual and to register for email notification of updates.

UNCONTROLLED COPY WHEN DOWNLOADED OR PRINTED

Visit www.enstromhelicopter.com for instructions to order an original manual and to register for email notification of updates.

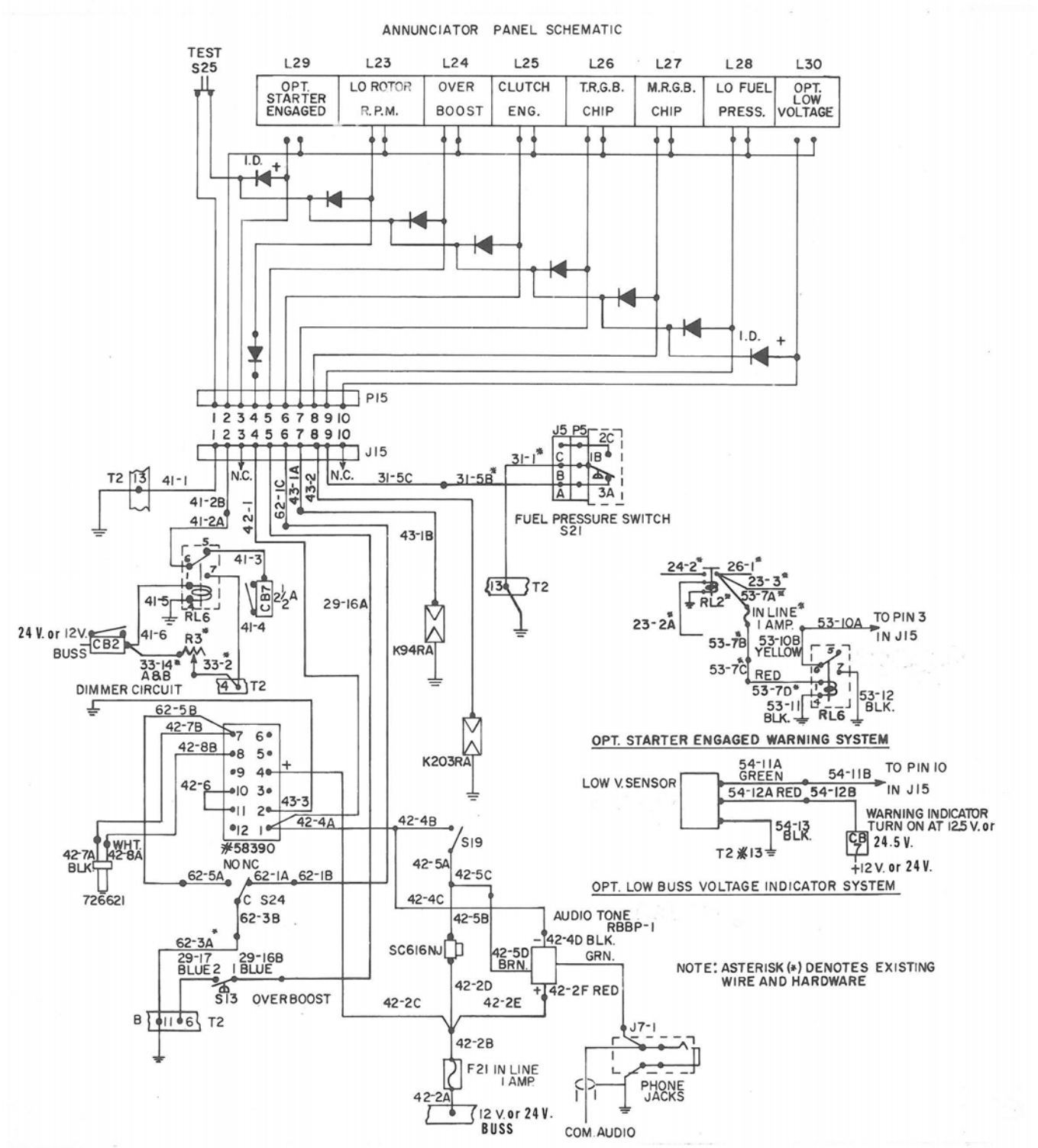

Annunciator Panel Schematic
(F-28F, S/N 830 and prior; 280FX, S/N 2135)

Diagram 21-4

UNCONTROLLED COPY WHEN DOWNLOADED OR PRINTED

Visit www.enstromhelicopter.com for instructions to order an original manual and to register for email notification of updates.

INTENTIONALLY LEFT BLANK

UNCONTROLLED COPY WHEN DOWNLOADED OR PRINTED

Visit www.enstromhelicopter.com for instructions to order an original manual and to register for email notification of updates.

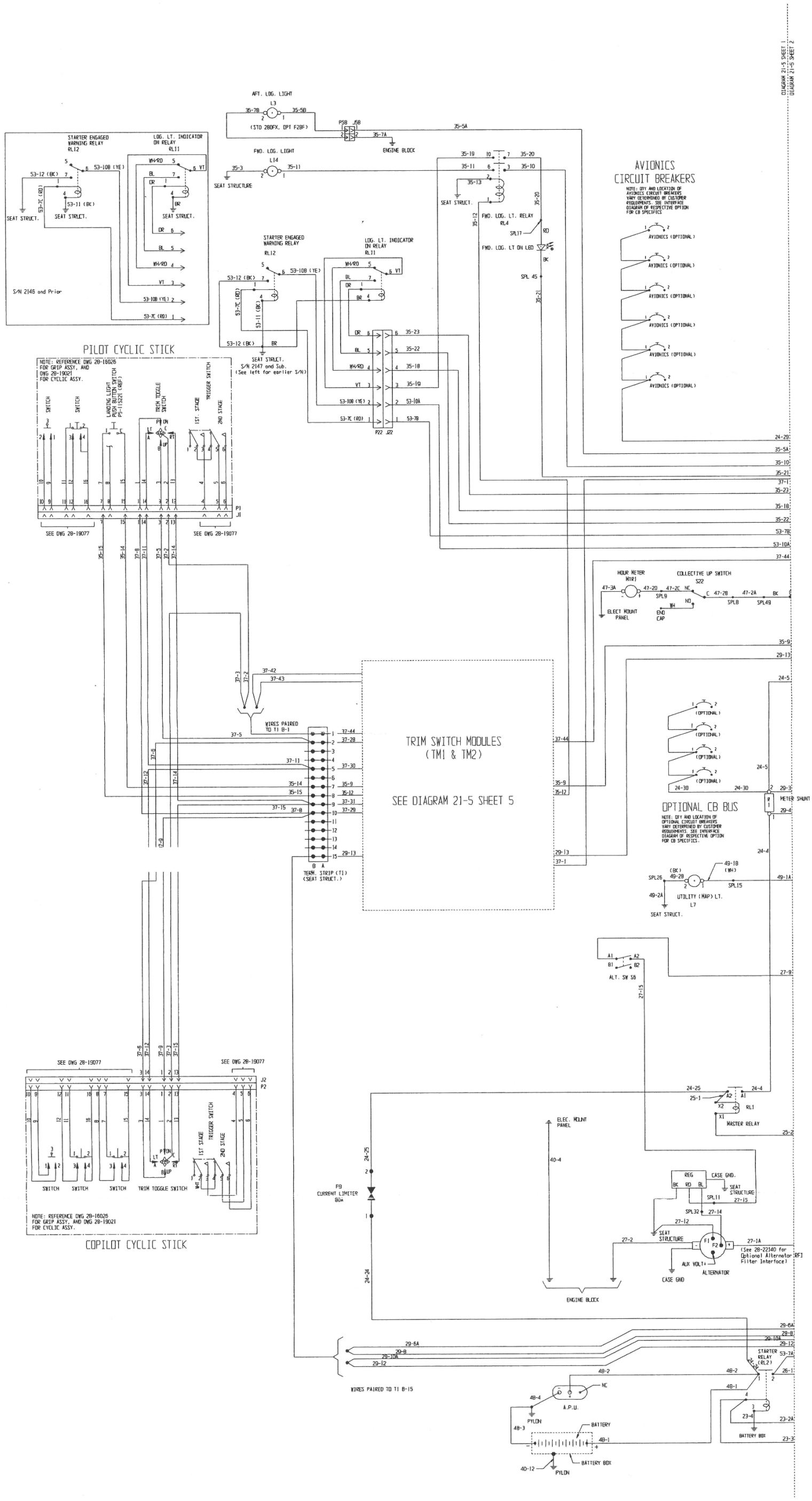

Diagram 21-5. 24 Volt Electrical System Schematic (F-28F, S/N 831 and subsequent; 280FX, S/N 2136 and subsequent) Sheet 1

UNCONTROLLED COPY WHEN DOWNLOADED OR PRINTED

Visit www.enstromhelicopter.com for instructions to order an original manual and to register for email notification of updates.

UNCONTROLLED COPY WHEN DOWNLOADED OR PRINTED

Visit www.enstromhelicopter.com for instructions to order an original manual and to register for email notification of updates.

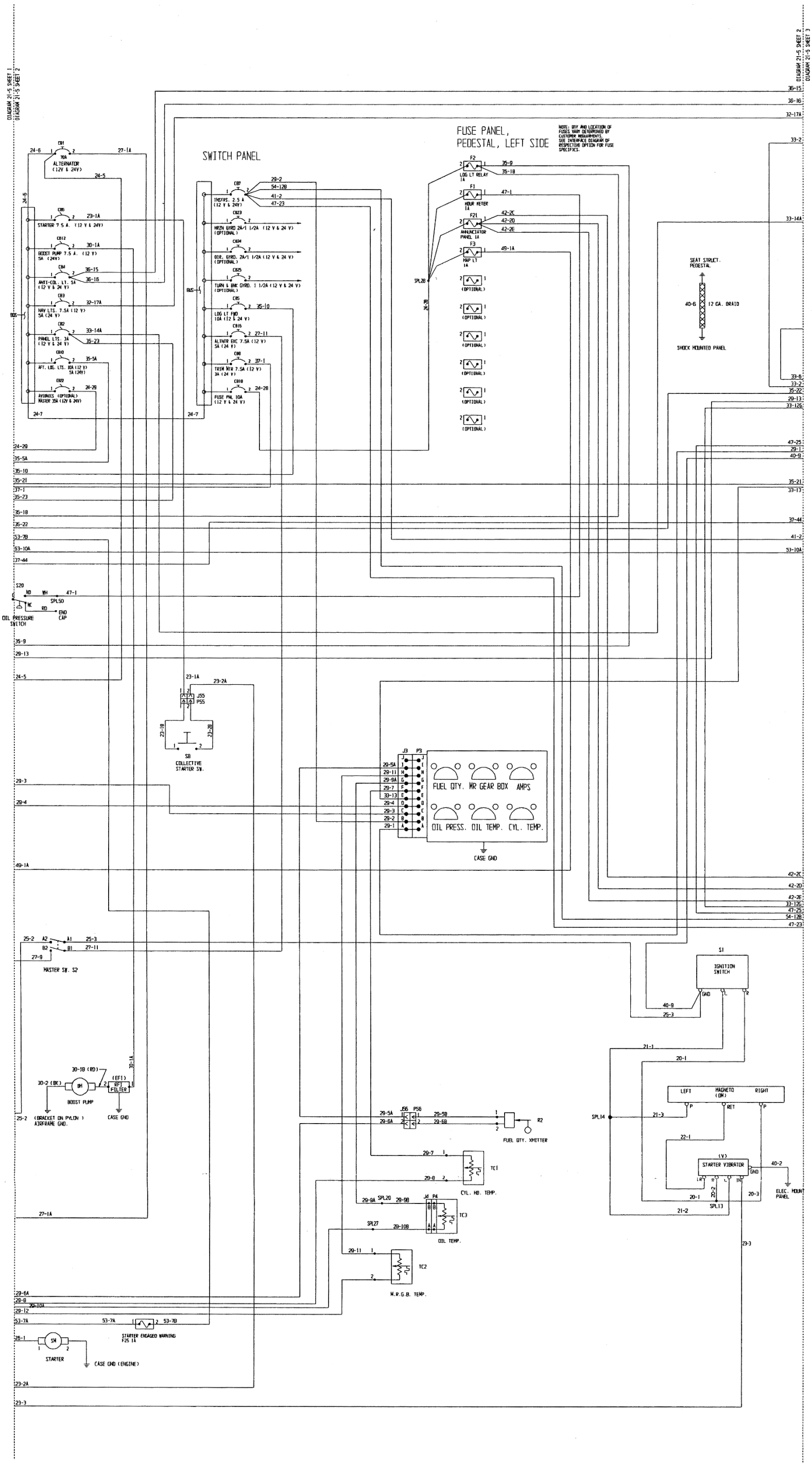

Diagram 21-5. 24 Volt Electrical System Schematic (F-28F, S/N 831 and subsequent; 280FX, S/N 2136 and subsequent) Sheet 2

UNCONTROLLED COPY WHEN DOWNLOADED OR PRINTED

Visit www.enstromhelicopter.com for instructions to order an original manual and to register for email notification of updates.

UNCONTROLLED COPY WHEN DOWNLOADED OR PRINTED

Visit www.enstromhelicopter.com for instructions to order an original manual and to register for email notification of updates.

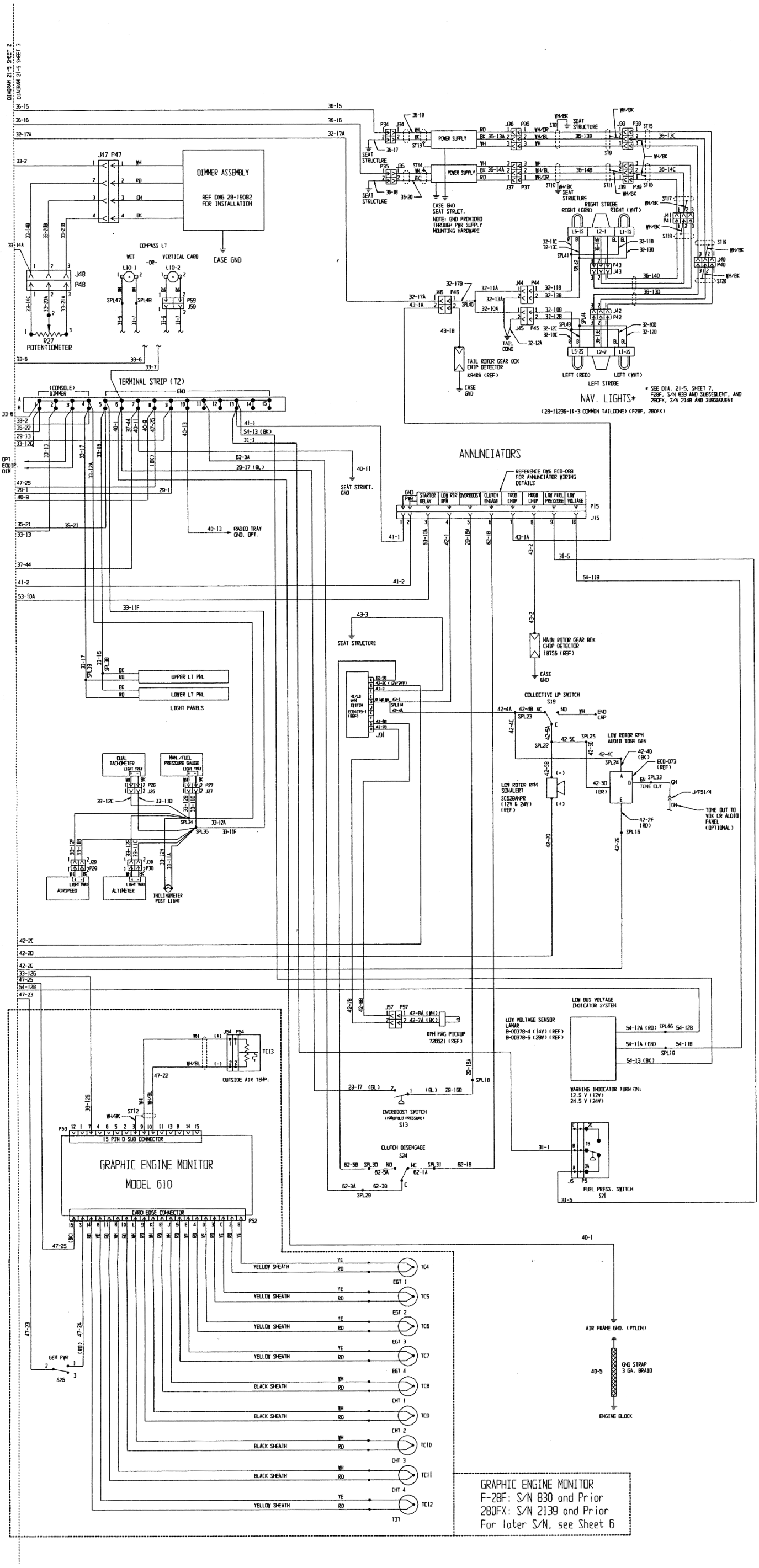

Diagram 21-5. 24 Volt Electrical System Schematic (F-28F, S/N 831 and subsequent; 280FX, S/N 2136 and subsequent) Sheet 3

UNCONTROLLED COPY WHEN DOWNLOADED OR PRINTED

Visit www.enstromhelicopter.com for instructions to order an original manual and to register for email notification of updates.

UNCONTROLLED COPY WHEN DOWNLOADED OR PRINTED

Visit www.enstromhelicopter.com for instructions to order an original manual and to register for email notification of updates.

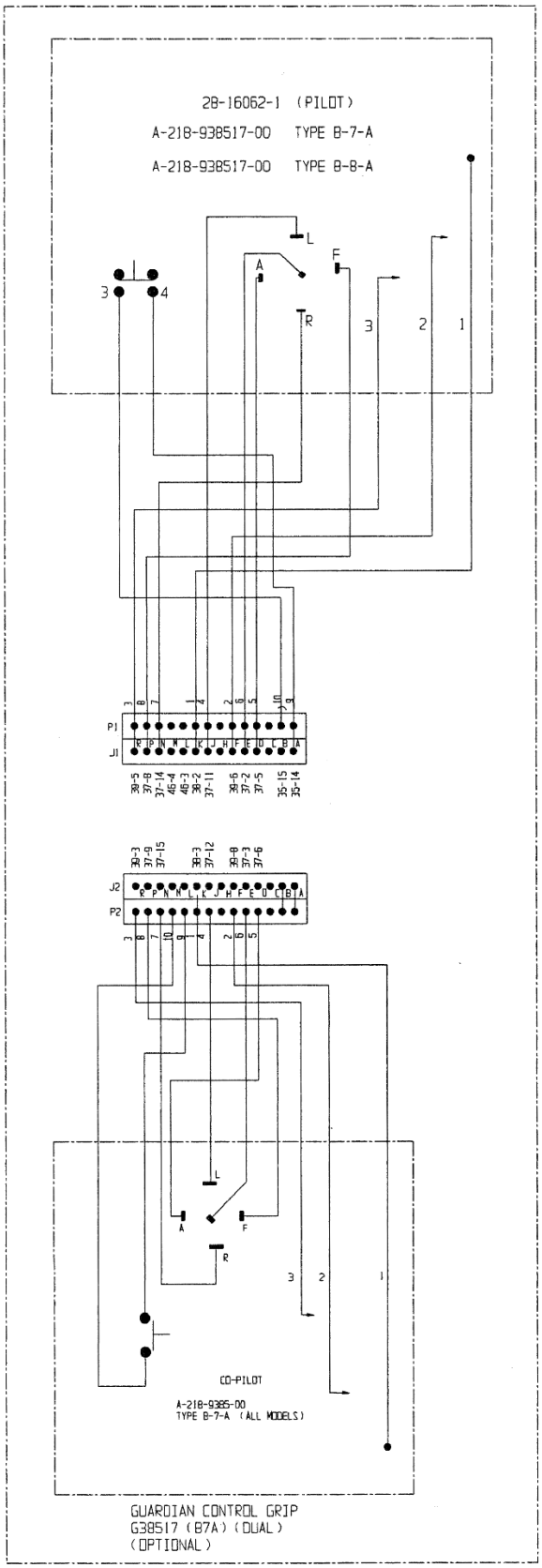

Diagram 21-5. 24 Volt Electrical System Schematic – Cyclic Grip
(F-28F, S/N 831 and subsequent; 280FX, S/N 2136 and subsequent) Sheet 4

UNCONTROLLED COPY WHEN DOWNLOADED OR PRINTED

Visit www.enstromhelicopter.com for instructions to order an original manual and to register for email notification of updates.

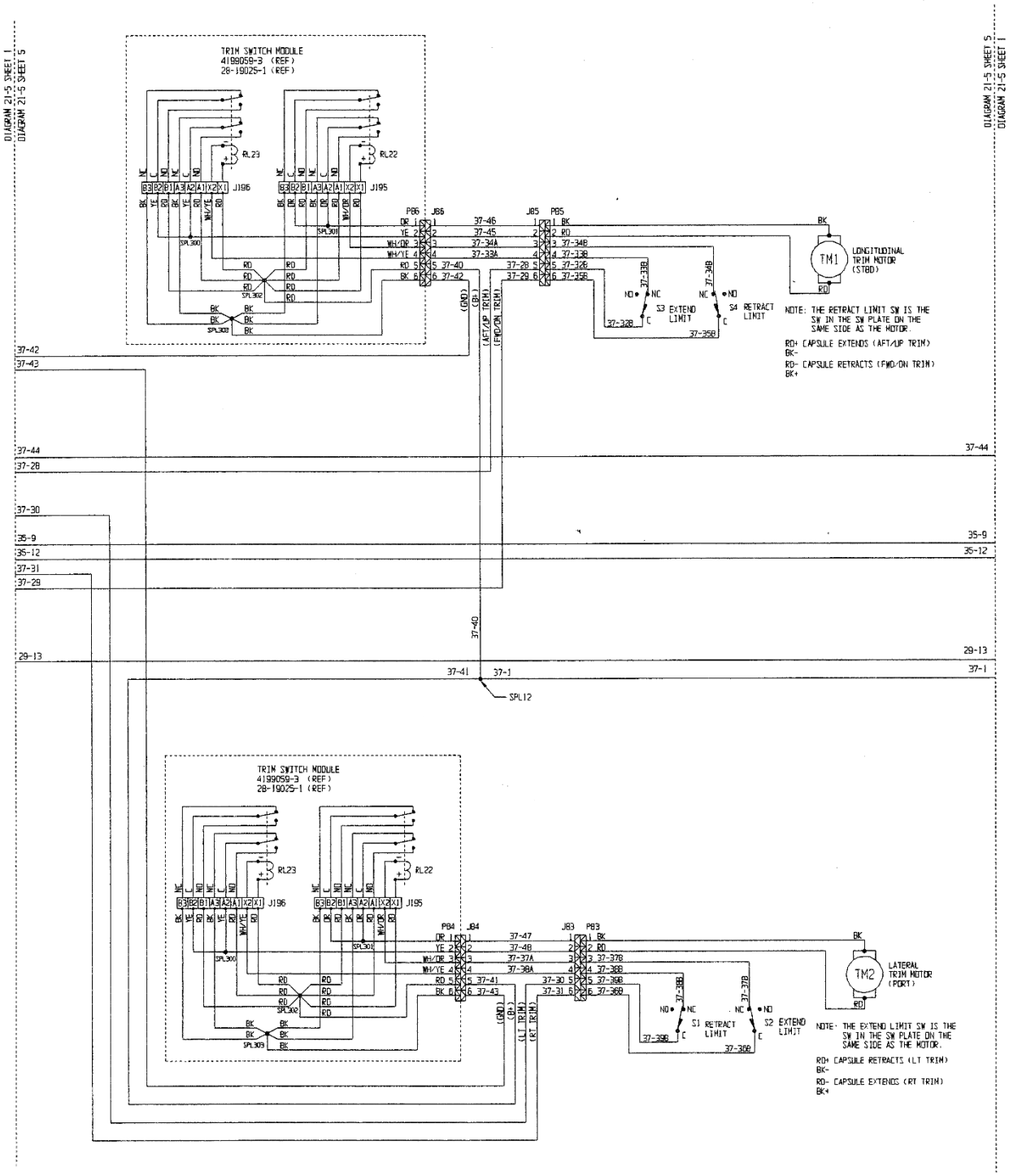

Diagram 21-5. 24 Volt Electrical System Schematic – Trim Switch Modules
(F-28F, S/N 831 and subsequent; 280FX, S/N 2136 and subsequent) Sheet 5

Visit www.enstromhelicopter.com for instructions to order an original manual and to register for email notification of updates.

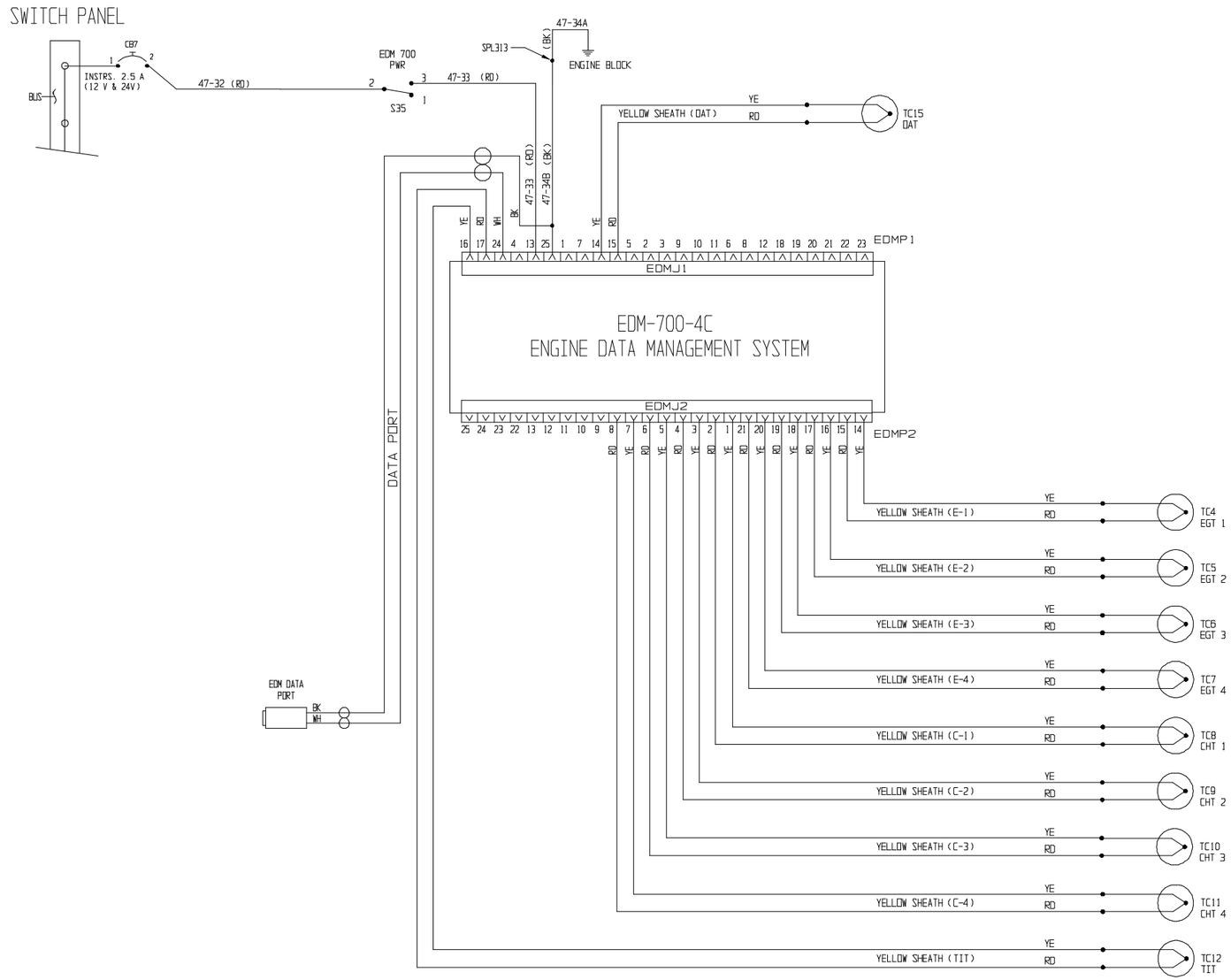

Diagram 21-5. 24 Volt Electrical System Schematic – EDM-700 (F-28F, S/N 831 and subsequent; 280FX, S/N 2140 and subsequent) Sheet 6

UNCONTROLLED COPY WHEN DOWNLOADED OR PRINTED

Visit www.enstromhelicopter.com for instructions to order an original manual and to register for email notification of updates.

UNCONTROLLED COPY WHEN DOWNLOADED OR PRINTED

Visit www.enstromhelicopter.com for instructions to order an original manual and to register for email notification of updates.

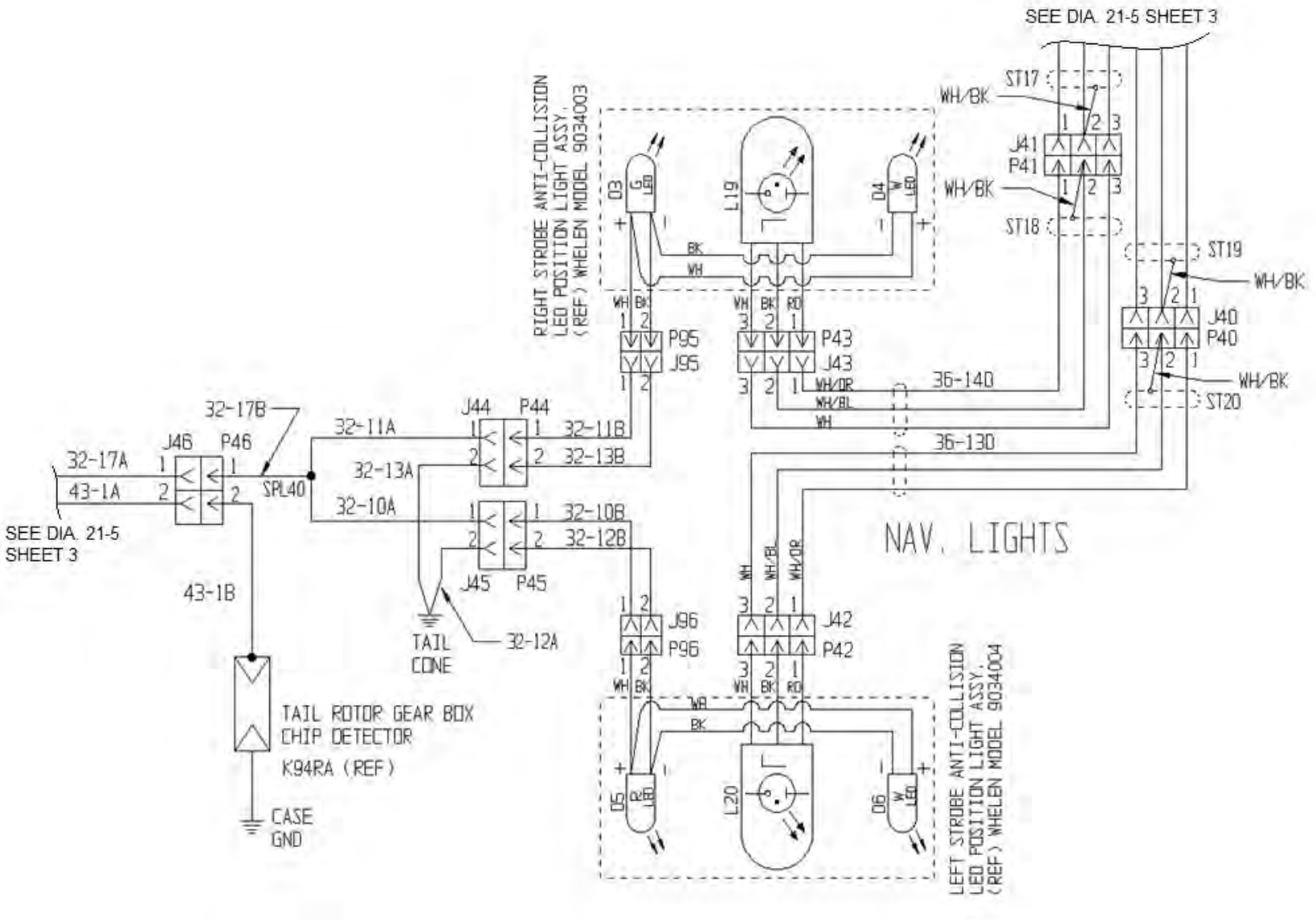

Diagram 21-5. LED Position Light Schematic (F-28F, S/N 833 and subsequent; 280FX, S/N 2148 and subsequent) Sheet 7

UNCONTROLLED COPY WHEN DOWNLOADED OR PRINTED

Visit www.enstromhelicopter.com for instructions to order an original manual and to register for email notification of updates.

INTENTIONALLY LEFT BLANK

UNCONTROLLED COPY WHEN DOWNLOADED OR PRINTED

Visit www.enstromhelicopter.com for instructions to order an original manual and to register for email notification of updates.

21-9. Illuminated Panels

NOTE

F-28F S/N 833 and subsequent and 280FX S/N 2167 helicopters are equipped with illuminated collective switch panel, illuminated circuit breaker/switch panel, and illuminated radio panel.

A. Illuminated Collective Switch Panel

The illuminated collective panel provides illumination for the switches contained in the control box mounted on the forward end of both the pilot collective and co-pilot collective sticks. A depiction of the illuminated collective panel and assembly is shown in Figure 21-3.

Removal

(1) Remove the two screws (1) and two washers (2) from the front of the illuminated panel.

(2) Lift the illuminated panel (3) to the side remove two screws (4) from the switch plate (5).

(3) Remove the two screws (6) from the handle assembly (7) and remove the switch plate cover (8).

(4) Cut the red and black wires 1.5 in/3.8 cm from the back of the switch plate (5) and remove the illuminated panel (3).

Installation

(1) Connect the red and black wires to the replacement illuminated panel (3).

(a) Strip 0.25 in/6.4 mm of the insulation from the cut ends of the two red wires.

(b) Slide 1.25 in/ 32 mm of shrink tube (P/N FIT-221V-1/8 or equivalent) over a red wire.

(c) Tin and solder both ends of the red wires together.

(d) Slide the shrink tube over the solder and shrink it with a heat gun.

(e) Repeat this operation with the black wires.

(2) Install the switch plate cover (8) under the handle assembly (7) and with two screws (6). Torque the screws 10.8 in-lb/1.22 Nm.

(3) Install the switch plate (5) onto the housing (9) and secure with two screws (4). Torque the screws 10.8 in-lb/1.22 Nm.

(4) Install the illuminated panel (3) onto the switch plate (5) and secure it with two screws (1) and washers (2). Torque the screws to 2 in-lb/0.23 Nm.

(5) Verify that the illuminated switch panel operates correctly.

UNCONTROLLED COPY WHEN DOWNLOADED OR PRINTED

Visit www.enstromhelicopter.com for instructions to order an original manual and to register for email notification of updates.

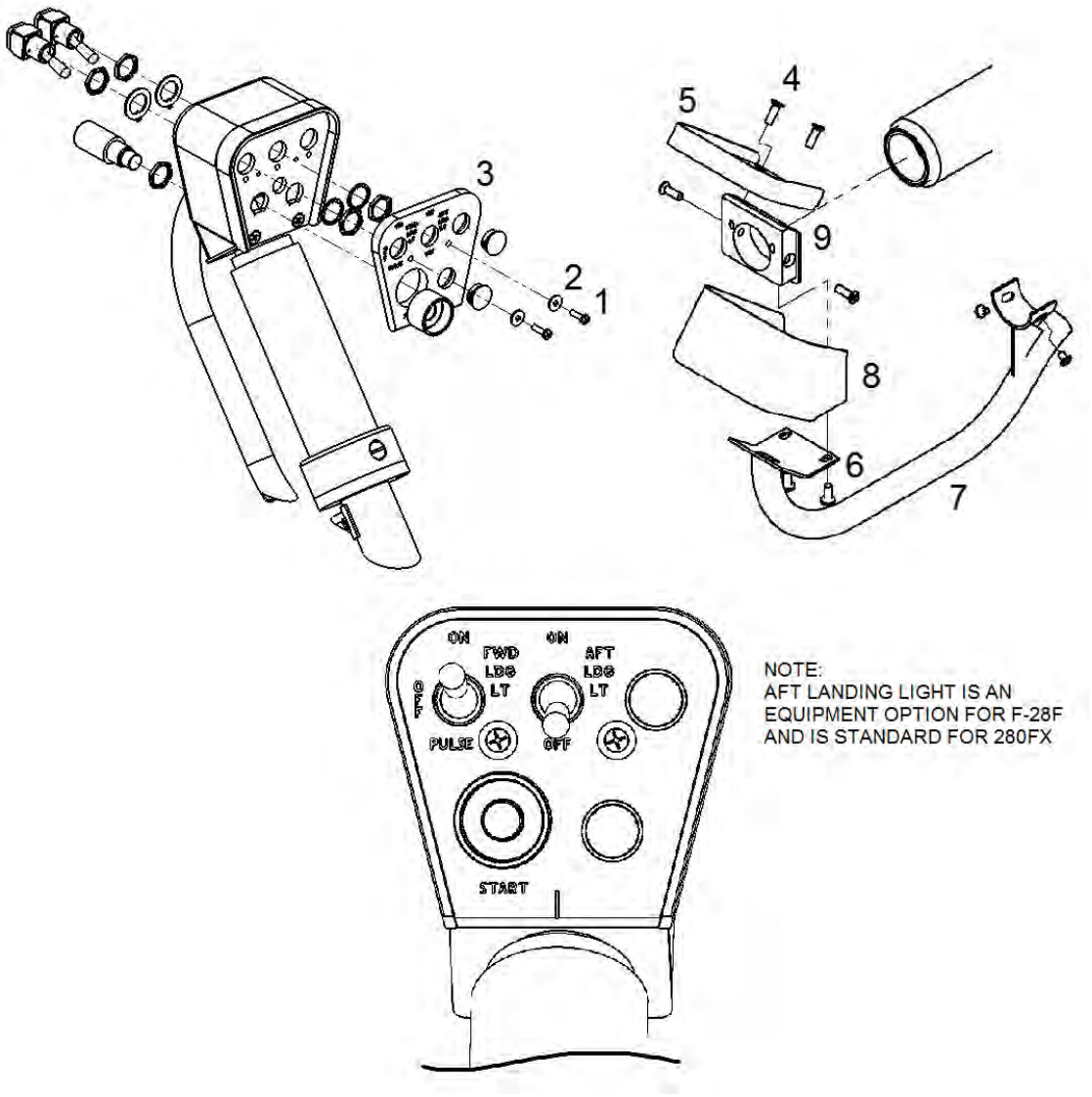

1. Screw
2. Washer
3. Illuminated Panel
4. Screw
5. Switch Plate
6. Screw
7. Handle Assembly
8. Switch Plate Cover
9. Housing

Figure 21-3. Illuminated Collective Panel Assembly and Installation

Visit www.enstromhelicopter.com for instructions to order an original manual and to register for email notification of updates.

B. Illuminated Switch and Circuit Breaker Panel and Radio Panel

An illuminated panel located between the upper instrument console and lower radio stack provides illumination for installed circuit breakers, switches, and dimmer control.

A separate illuminated radio stack panel also provides illumination for additional avionic system switches, such as transponder and remote ELT switches, for example.

A depiction of the illuminated panels is shown in Figure 21-4.

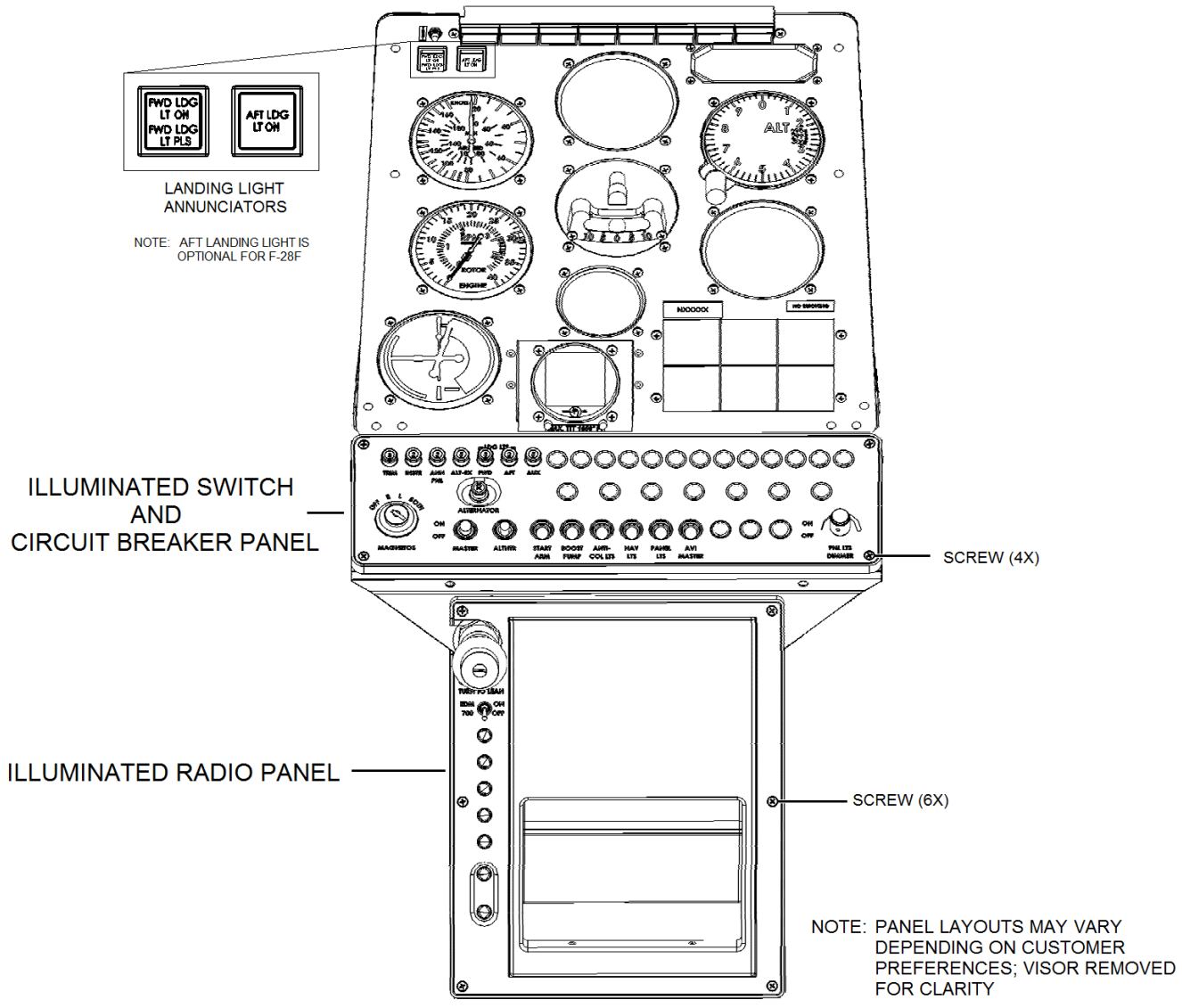

Figure 21-4. Illuminated Switch/Circuit Breaker and Radio Panels

Visit www.enstromhelicopter.com for instructions to order an original manual and to register for email notification of updates.

Removal – Switch and circuit breaker panel:

(1) Remove power from the aircraft.

(2) Center all toggle switches and remove the PNL LTS DIMMER knob.

(3) Remove the screws (4X) (Figure 21-4).

(4) Lift the panel away from the console to access the electrical connector.

(5) Disconnect the electrical connector and remove the panel.

Removal – Radio panel:

(1) Remove power from the aircraft.

(2) Center all toggle switches.

(3) Remove the screws (6X) (Figure 21-4).

(4) Lift the panel away from the console to access the electrical connector.

(5) Disconnect the electrical connector and remove the panel.

Installation – Switch and circuit breaker panel and radio panel:

(1) Connect the electrical connector.

(2) Install the panel in position.

(3) Install the screws, as required (Figure 21-4).

(4) Install the dimmer knob, if required, and toggle all switches to OFF or as required, as applicable.

(5) Apply aircraft power and check the illuminated panel operation.

UNCONTROLLED COPY WHEN DOWNLOADED OR PRINTED

Visit www.enstromhelicopter.com for instructions to order an original manual and to register for email notification of updates.

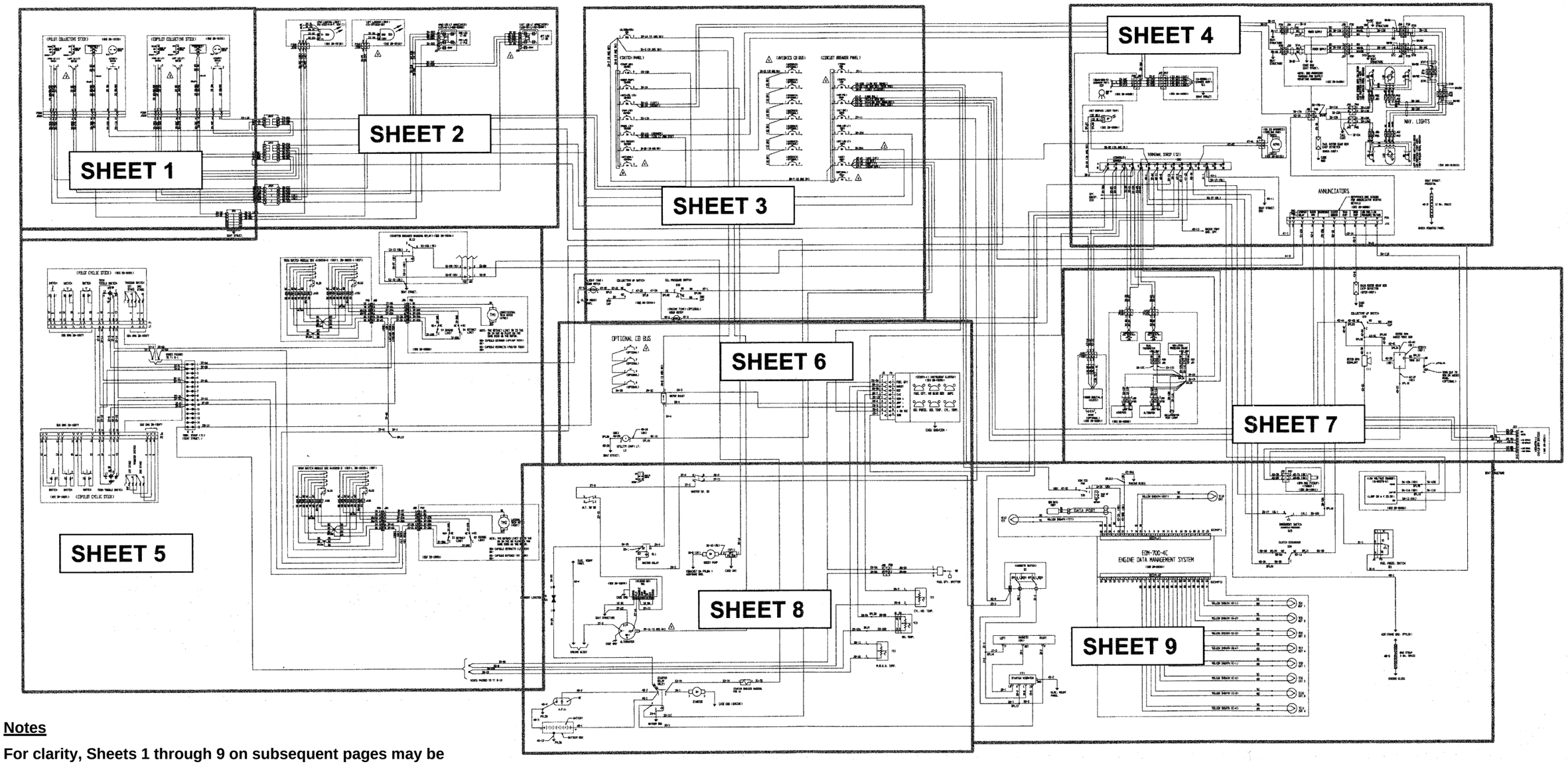

Notes

For clarity, Sheets 1 through 9 on subsequent pages may be altered from the diagram shown above.

2 See 28-22140 for optional alternator RFI filter interface.

3 Aft landing light is optional for F-28F. When not configured, wire #35-24A will be disconnected and tied back near the cutouts for SW132 and SW133 in the collective stick assemblies. Connector J98 and J339 will be tied back to the harness.

4 CB/Switches location and quantity may vary depending on customer preferences.

5 Typical

6 Typical

UNCONTROLLED COPY WHEN DOWNLOADED OR PRINTED

Visit www.enstromhelicopter.com for instructions to order an original manual and to register for email notification of updates.

UNCONTROLLED COPY WHEN DOWNLOADED OR PRINTED

Visit www.enstromhelicopter.com for instructions to order an original manual and to register for email notification of updates.

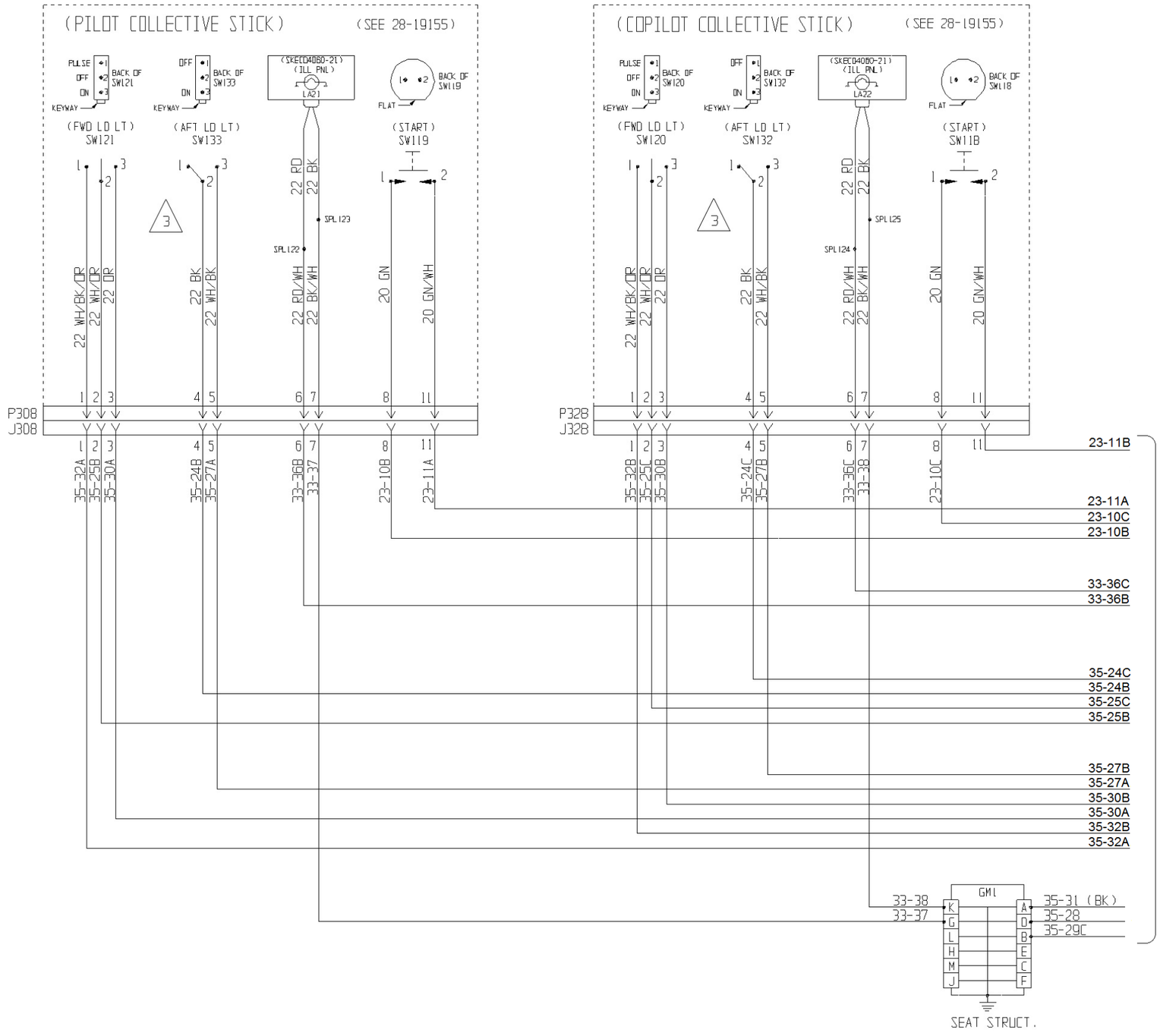

Diagram 21-6 (Sheet 1). Power Distribution
(F-28F S/N 833 and Subsequent; 280FX S/N 2167 and Subsequent)
Rev. 10, Feb 7/19
MM-21-39/MM-21-40 Blank

UNCONTROLLED COPY WHEN DOWNLOADED OR PRINTED

Visit www.enstromhelicopter.com for instructions to order an original manual and to register for email notification of updates.

UNCONTROLLED COPY WHEN DOWNLOADED OR PRINTED

Visit www.enstromhelicopter.com for instructions to order an original manual and to register for email notification of updates.

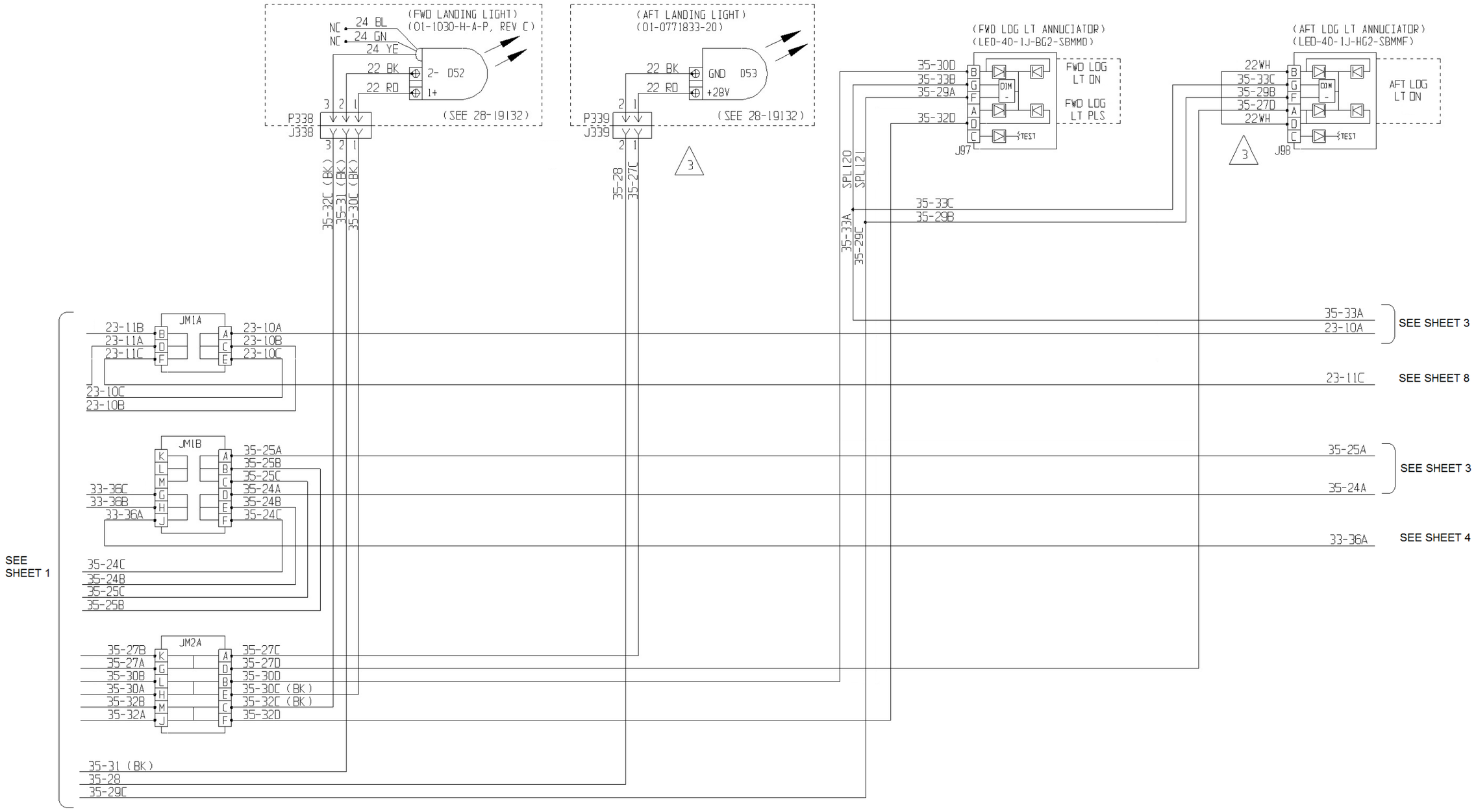

Diagram 21-6 (Sheet 2). Power Distribution
(F-28F S/N 833 and Subsequent; 280FX S/N 2167 and Subsequent)
Rev. 10, Feb 7/19
MM-21-41/MM-21-42 Blank

UNCONTROLLED COPY WHEN DOWNLOADED OR PRINTED

Visit www.enstromhelicopter.com for instructions to order an original manual and to register for email notification of updates.

UNCONTROLLED COPY WHEN DOWNLOADED OR PRINTED

Visit www.enstromhelicopter.com for instructions to order an original manual and to register for email notification of updates.

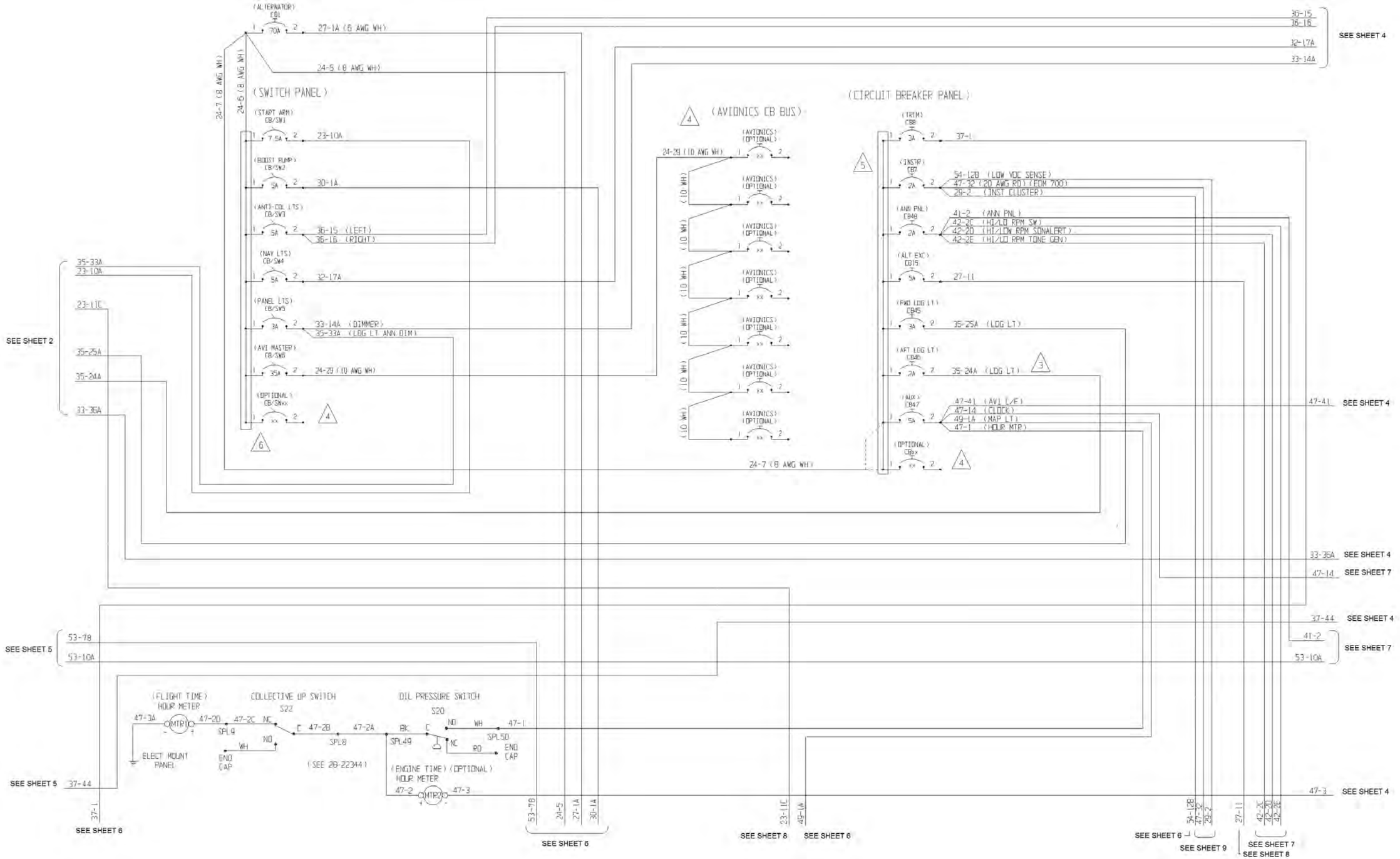

Diagram 21-6 (Sheet 3). Power Distribution
(F-28F S/N 833 and Subsequent; 280FX S/N 2167 and Subsequent)
Rev. 10, Feb 7/19
MM-21-43/MM-21-44 Blank

UNCONTROLLED COPY WHEN DOWNLOADED OR PRINTED

Visit www.enstromhelicopter.com for instructions to order an original manual and to register for email notification of updates.

UNCONTROLLED COPY WHEN DOWNLOADED OR PRINTED

Visit www.enstromhelicopter.com for instructions to order an original manual and to register for email notification of updates.

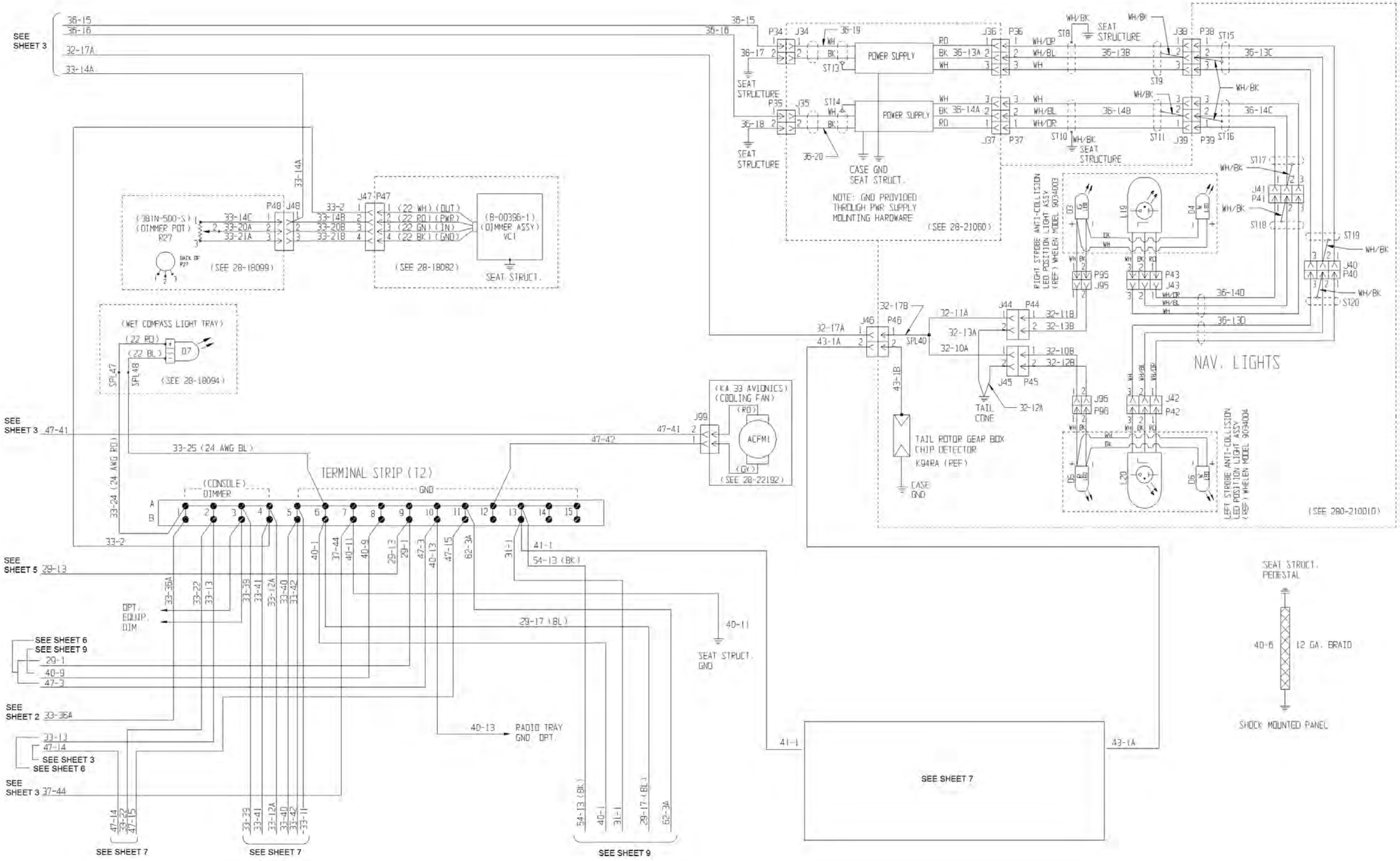

Diagram 21-6 (Sheet 4). Power Distribution
(F-28F S/N 833 and Subsequent; 280FX S/N 2167 and Subsequent)
Rev. 10, Feb 7/19
MM-21-45/MM-21-46 Blank

UNCONTROLLED COPY WHEN DOWNLOADED OR PRINTED

Visit www.enstromhelicopter.com for instructions to order an original manual and to register for email notification of updates.

UNCONTROLLED COPY WHEN DOWNLOADED OR PRINTED

Visit www.enstromhelicopter.com for instructions to order an original manual and to register for email notification of updates.

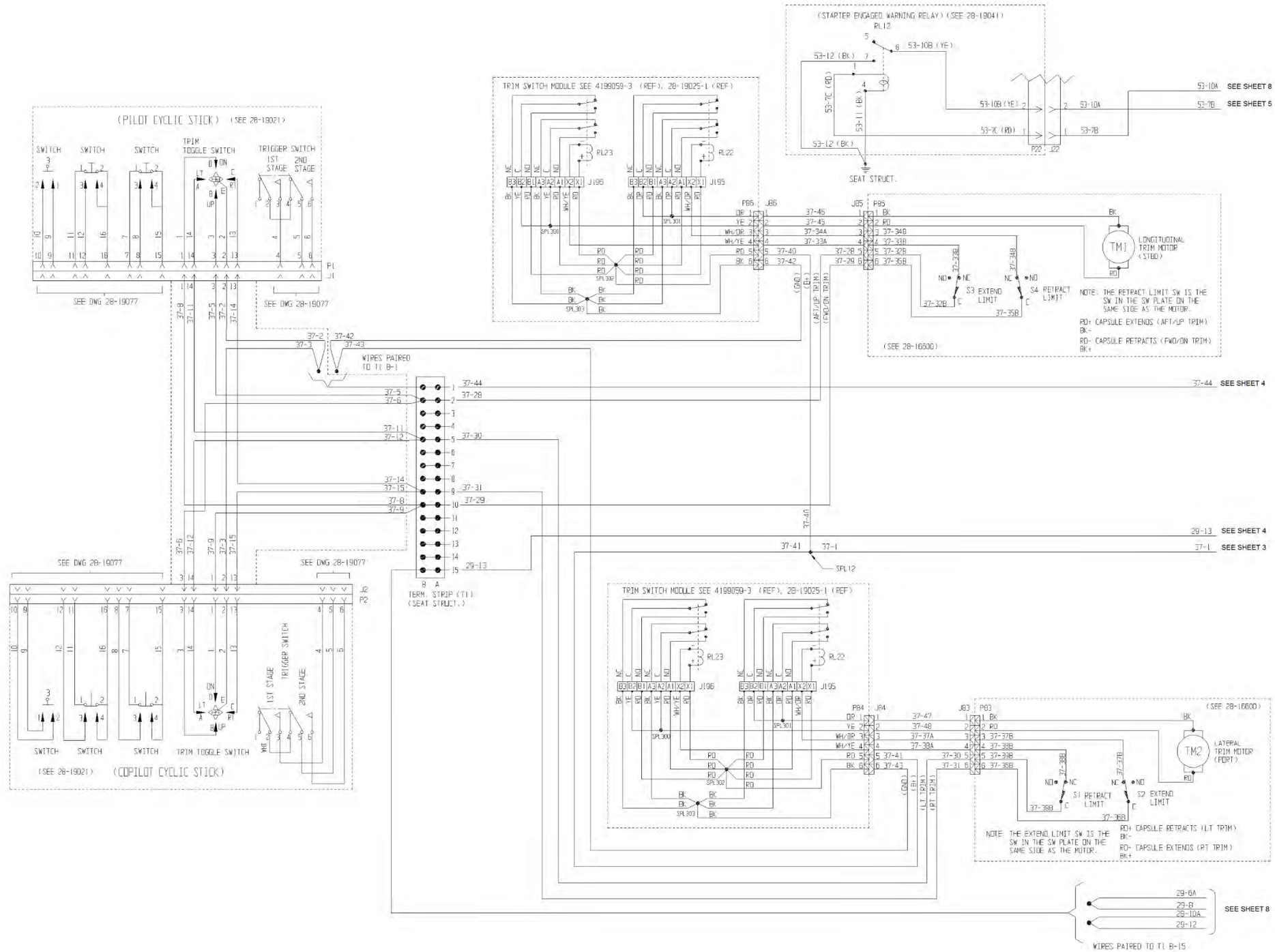

Diagram 21-6 (Sheet 5). Power Distribution
(F-28F S/N 833 and Subsequent; 280FX S/N 2167 and Subsequent)
Rev. 10, Feb 7/19
MM-21-47/MM-21-48 Blank

UNCONTROLLED COPY WHEN DOWNLOADED OR PRINTED

Visit www.enstromhelicopter.com for instructions to order an original manual and to register for email notification of updates.

UNCONTROLLED COPY WHEN DOWNLOADED OR PRINTED

Visit www.enstromhelicopter.com for instructions to order an original manual and to register for email notification of updates.

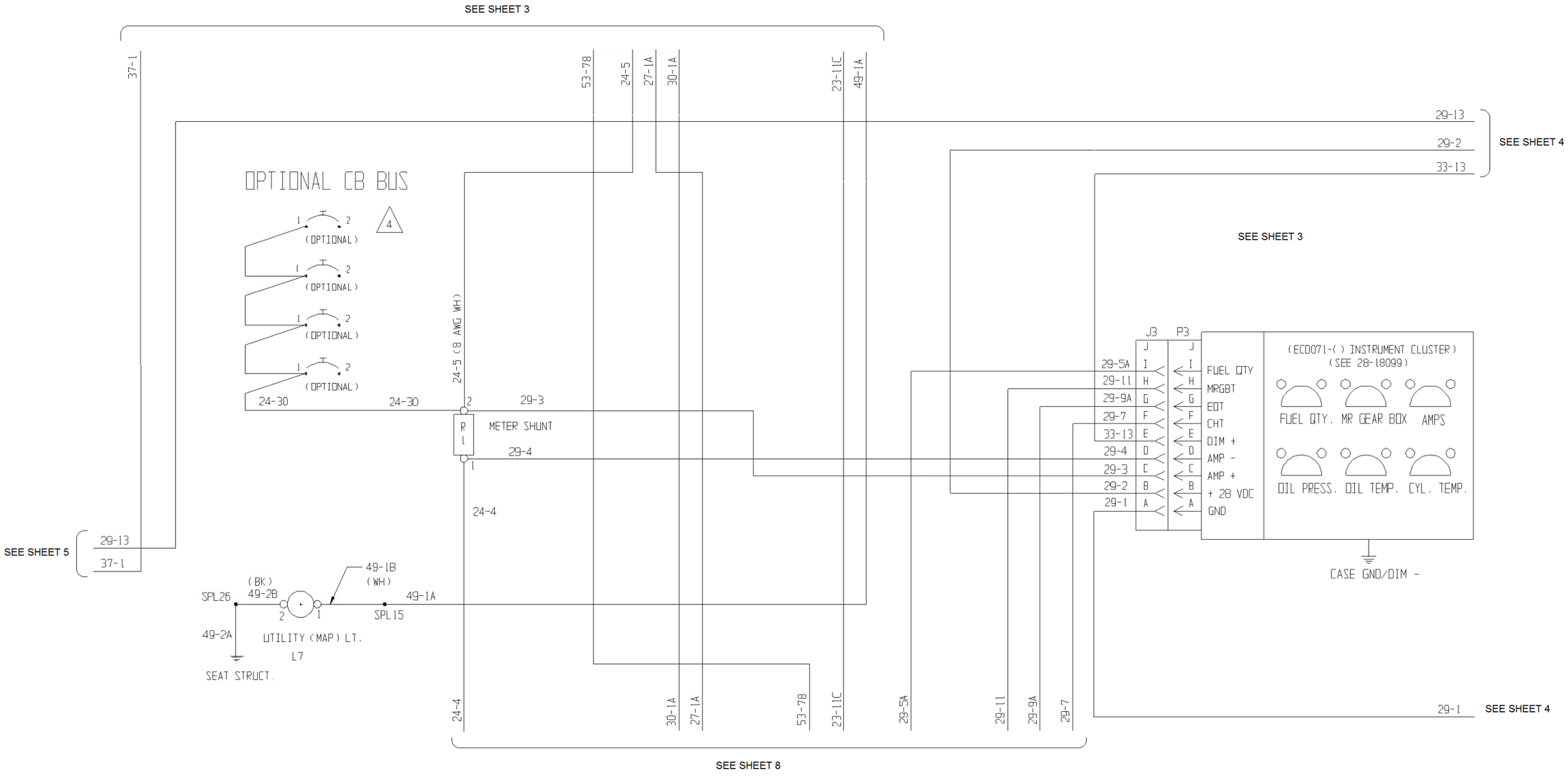

Diagram 21-6 (Sheet 6). Power Distribution
(F-28F S/N 833 and Subsequent; 280FX S/N 2167 and Subsequent)
Rev. 10, Feb 7/19
MM-21-49/MM-21-50 Blank

UNCONTROLLED COPY WHEN DOWNLOADED OR PRINTED

Visit www.enstromhelicopter.com for instructions to order an original manual and to register for email notification of updates.

UNCONTROLLED COPY WHEN DOWNLOADED OR PRINTED

Visit www.enstromhelicopter.com for instructions to order an original manual and to register for email notification of updates.

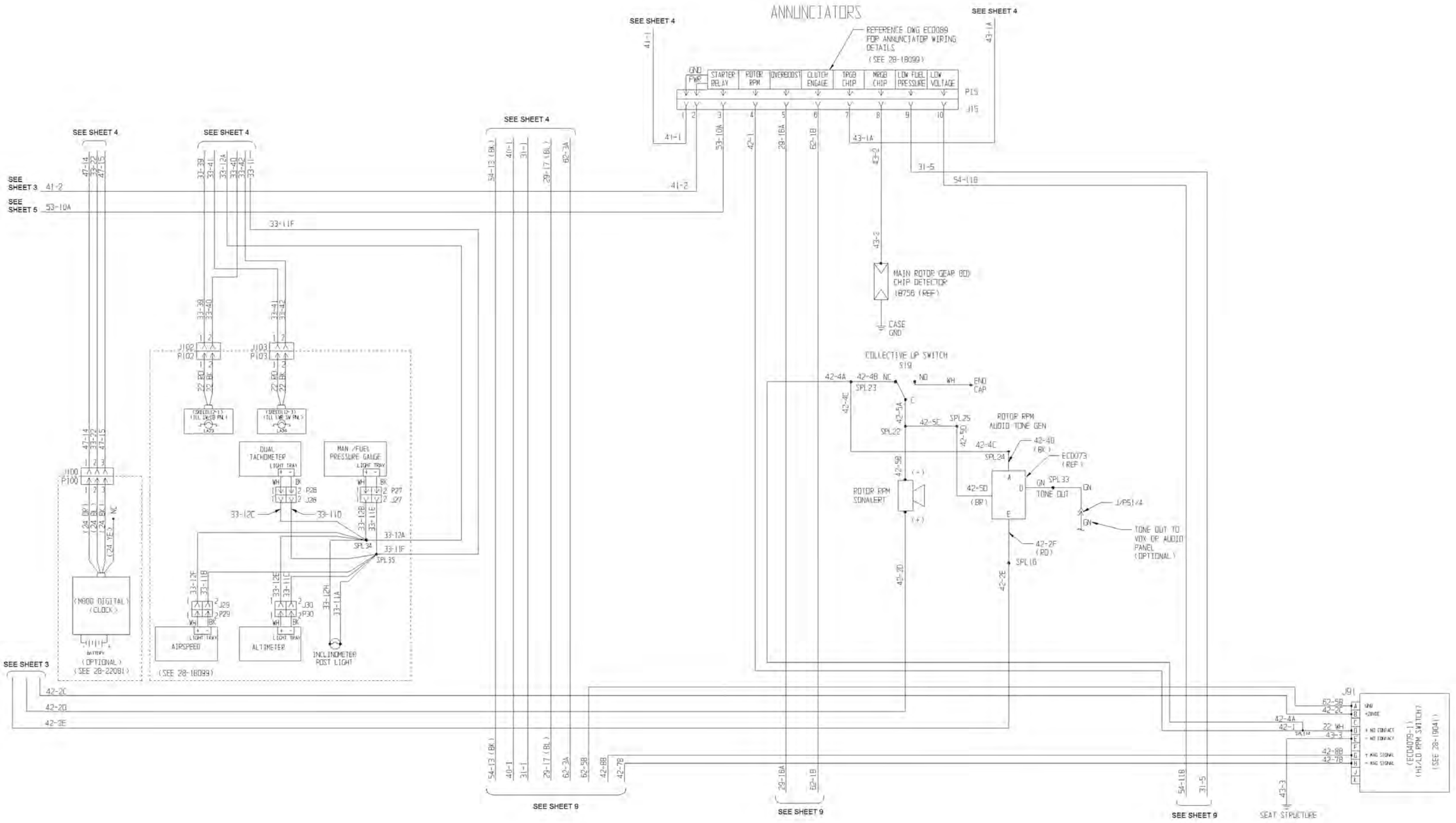

Diagram 21-6 (Sheet 7). Power Distribution
(F-28F S/N 833 and Subsequent; 280FX S/N 2167 and Subsequent)
Rev. 10, Feb 7/19
MM-21-51/MM-21-52 Blank

UNCONTROLLED COPY WHEN DOWNLOADED OR PRINTED

Visit www.enstromhelicopter.com for instructions to order an original manual and to register for email notification of updates.

UNCONTROLLED COPY WHEN DOWNLOADED OR PRINTED

Visit www.enstromhelicopter.com for instructions to order an original manual and to register for email notification of updates.

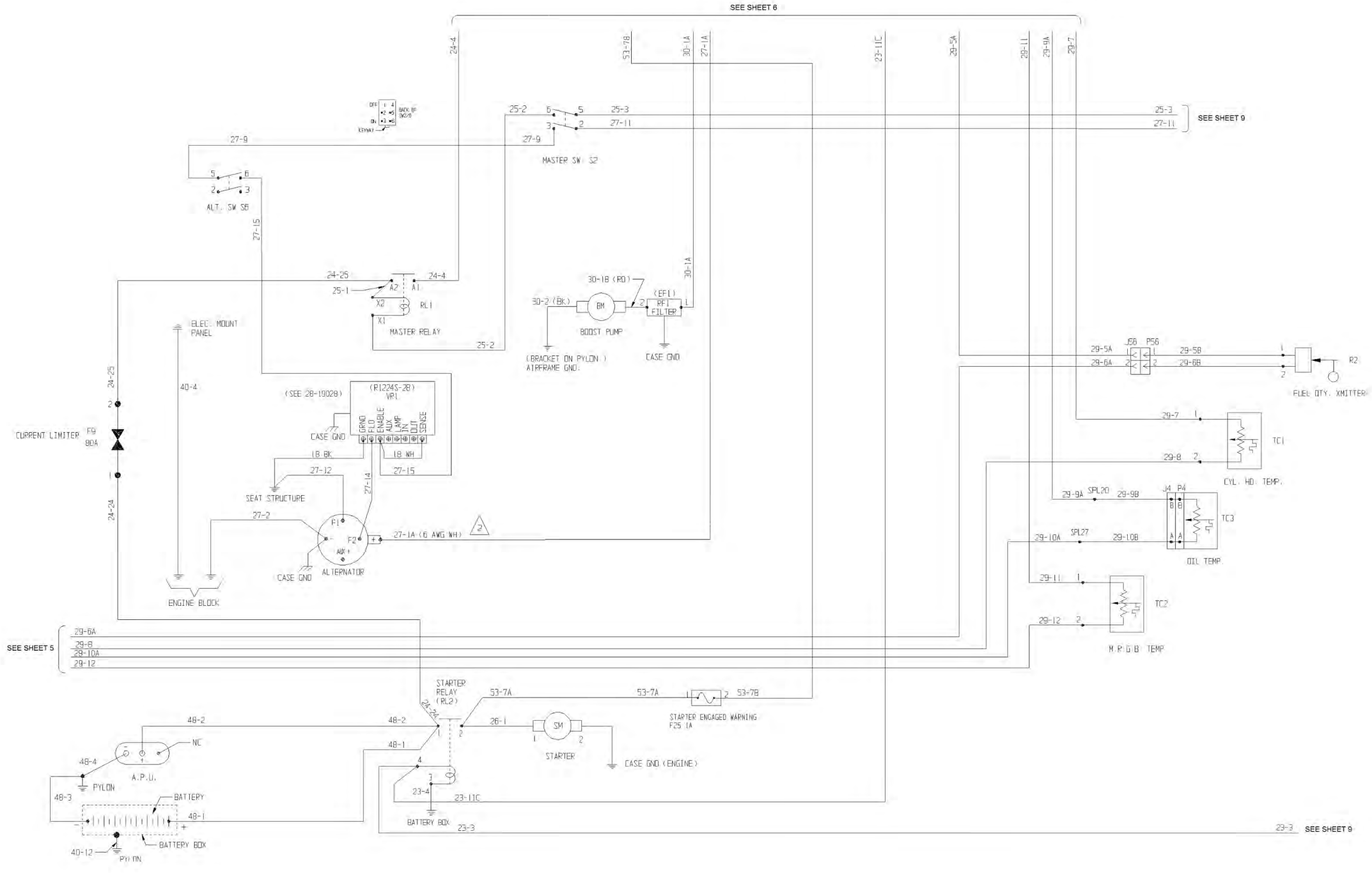

Diagram 21-6 (Sheet 8). Power Distribution
(F-28F S/N 833 and Subsequent; 280FX S/N 2167 and Subsequent)
Rev. 10, Feb 7/19
MM-21-53/MM-21-54 Blank

UNCONTROLLED COPY WHEN DOWNLOADED OR PRINTED

Visit www.enstromhelicopter.com for instructions to order an original manual and to register for email notification of updates.

UNCONTROLLED COPY WHEN DOWNLOADED OR PRINTED

Visit www.enstromhelicopter.com for instructions to order an original manual and to register for email notification of updates.

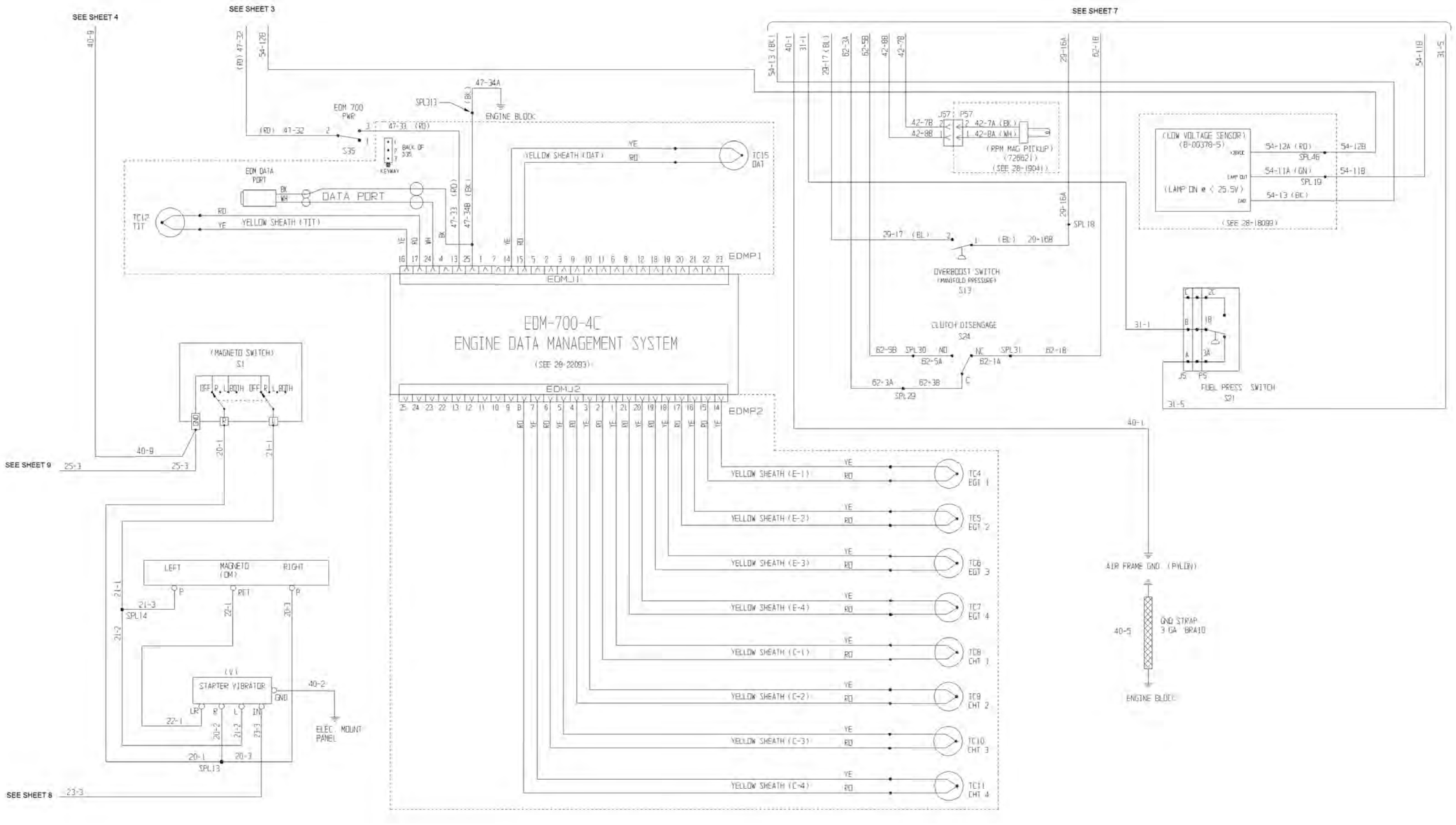

Diagram 21-6 (Sheet 9). Power Distribution
(F-28F S/N 833 and Subsequent; 280FX S/N 2167 and Subsequent)
Rev. 10, Feb 7/19
MM-21-55/MM-21-56 Blank

UNCONTROLLED COPY WHEN DOWNLOADED OR PRINTED

Visit www.enstromhelicopter.com for instructions to order an original manual and to register for email notification of updates.

UNCONTROLLED COPY WHEN DOWNLOADED OR PRINTED

Visit www.enstromhelicopter.com for instructions to order an original manual and to register for email notification of updates.

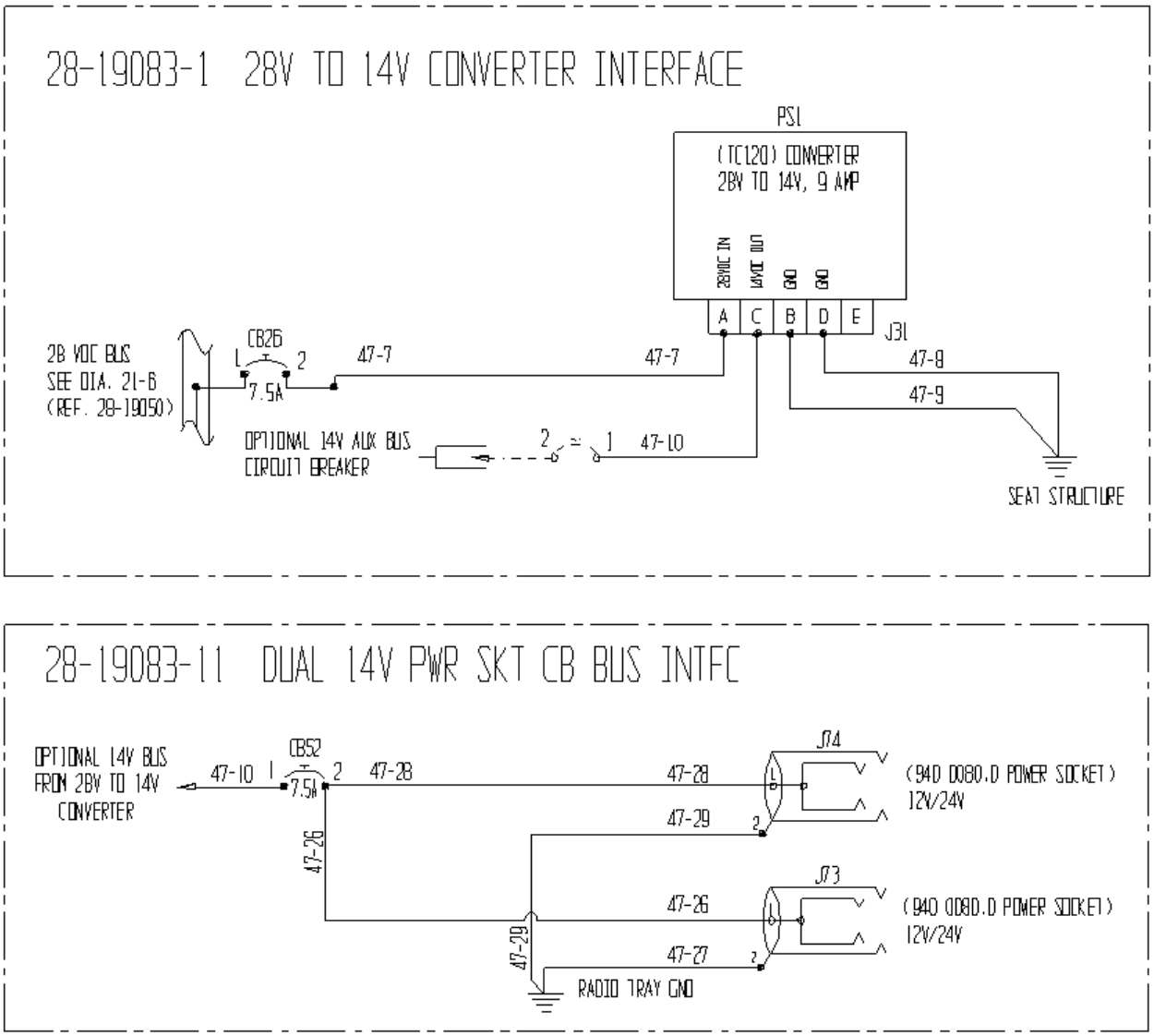

Diagram 21-7. 28 to 14 Volt Converter and Dual 14 Volt Power Sockets (Option)

Visit www.enstromhelicopter.com for instructions to order an original manual and to register for email notification of updates.

INTENTIONALLY LEFT BLANK

UNCONTROLLED COPY WHEN DOWNLOADED OR PRINTED

Visit www.enstromhelicopter.com for instructions to order an original manual and to register for email notification of updates.