ATP INDEX

COPYRIGHT © 2002

COPYRIGHT IS NOT CLAIMED AS TO ANY PART OF AN ORIGINAL WORK PREPARED BY A UNITED STATES GOVERNMENT OFFICER OR EMPLOYEE AS PART OF THAT PERSONS OFFICIAL DUTIES OR BY ANY OTHER THIRD PARTY OFFICER OR EMPLOYEE AS PART OF THAT PERSONS DUTIES.

"ATP" is a registered trademark of Aircraft Technical Publishers. All original authorship of ATP is protected under U.S. and foreign copyrights and is subject to written license agreements between ATP and its Subscribers.

ALL RIGHTS RESERVED. NO PART OF THIS PUBLICATION MAY BE REPRODUCED, STORED IN A RETRIEVAL SYSTEM, OR TRANSMITTED IN ANY FORM BY ANY MEANS, ELECTRONIC, MECHANICAL, PHOTOCOPYING, RECORDING OR OTHERWISE, WITHOUT PRIOR WRITTEN PERMISSION OF THE PUBLISHER.

Aircraft Technical Publishers
101 South Hill Drive
Brisbane, CA 94005

Customer Service
6AM-5PM PST M-F
(800)227-4610

ATP Grid Index to Manufacturer's Publications:

Beech Aircraft Corp.
55, A55, B55 (B55A), C55 (C55A), D55 (D55A), E55
Illustrated Parts Catalog

Section	Topic
	General Information
	Title Page
	Manufacturer's Introduction
	Record of Revisions
	Record of Temporary Revisions
	Letter of Transmittal (Highlights of Changes)
	Alphabetical Index
	Alpha-Numerical Index
	Alpha
	Numeric
	Aircraft General
11.00.00	Placards and Markings
11.00.00	List of Effective Pages
11.20.00	Exterior Placards and Markings
11.20.01	Exterior Placards TC-1 Thru TC-1607,TE-1 Thru TE-767
11.20.10	Exterior Placards TE-768 Thru TE-942 Except TE-938
11.30.00	Interior Placards
11.30.01	Interior Placards TC-1 Thru TC-1607,TE-1 Thru TE-767
11.30.10	Interior Placards TE-768 Thru TE-942 Except TE-938
	Airframe Systems
21.00.00	Air Conditioning
21.00.00	List of Effective Pages
21.20.00	Distribution
21.20.01	Heat and Vent Ducts
21.20.01	TC-1 Thru TC-954

 Copyright ® Aircraft Technical Publishers

Section	Topic
21.20.10	TC-955 Thru TC-1607,TE-1 Thru TE-942 Except TE-938
21.22.01	Overhead Panel & Ducts
21.22.01	TC-1 Thru TC-954 Except TC-350
21.22.10	TC-350,TC-955 Thru TC-963,TE-1 Thru TE-10
21.22.20	TC-964 Thru TC-1402,TE-11 Thru TE-767
21.22.30	TE-768 Thru TE-846
21.22.40	TC-1403 Thru TC-1607,TE-847 Thru TE-942 Excpt TE-938
21.22.50	Overhead Air Duct Installation
21.40.00	Heating
21.40.01	Cabin Heater
21.40.20	Heater Fuel Plumbing
21.40.40	Heater Fuel Pump
21.40.60	Heater Blower
23.00.00	Communications
23.00.00	List of Effective Pages
23.60.00	Static Discharging
23.60.01	Static Wick
24.00.00	Electrical Power
24.00.00	List of Effective Pages
24.00.00	General
24.00.01	Fuselage Electrical Equipment
24.01.01	Wing Electrical
24.30.00	DC Generation
24.30.01	Alternator
24.30.10	Generator (25 AMP)
24.30.20	Battery Installation
24.40.00	External Power
24.40.01	External Power Receptical
25.00.00	Equipment/Furnishings
25.00.00	List of Effective Pages
25.10.00	Flight Compartment
25.10.01	Loose Tools and Accessories
25.13.01	Pilot and Copilot Seats
25.13.01	TC-1 Thru TC-190
25.13.10	TC-191 Thru TC-1298,TE-1 Thru TE-451
25.13.20	TE-452 Thru TE-767
25.13.30	TC-1229 Thru TC-1402,TE-768 Thru TE-846
25.13.40	TC-1403 Thru TC-1607,TE-847 Thru TE-942 Excpt TE-938

Copyright ® Aircraft Technical Publishers

Section	Topic
25.16.01	Glareshield Installation
25.16.01	TC-1 Thru TC-190
25.16.10	TC-191 Thru TC-1042,TE-1 Thru TE-451
25.16.20	TC-1043 Thru TC-1402,TE-452 Thru TE-767
25.16.30	TC-1403 Thru TC-1607,TE-768 Thru TE-942 Excpt TE-938
25.20.00	Passenger Compartment
25.20.01	Passenger Seats
25.20.01	TC-1 Thru TC-190
25.20.10	TC-191 Thru TC-1298,TE-1 Thru TE-451
25.20.20	TC-1299 Thru TC-1607,TE-452 Thru TE-942 Excpt TE-938
25.21.01	Fifth Seat
25.21.10	Folding Fifth and Sixth Seat
25.21.20	Special Seats
25.21.20	TC-641 Thru TC-1298,TE-1 Thru TE-767
25.21.30	TC-1299 Thru TC-1607,TE-768 Thru TE-942 Excpt TE-938
25.22.01	Cabin Upholstery TE-1 Thru TE-451
25.22.02	Cabin Upholstery TC-1 Thru TC-190
25.22.03	Cabin Upholstery TC-191 Thru TC-1607
25.22.05	Cabin Upholstery TE-452 Thru TE-767
25.22.07	Cabin Upholstery TE-768 Thru TE-942 Except TE-938
25.23.01	Miscellaneous Cabin Furnishing
25.28.01	Carpet and Spar Covers
25.28.01	TC-1 Thru TC-190
25.28.10	TC-191 Thru TC-1402,TE-1 Thru TE-767
25.28.20	TC-1403 Thru TC-1607,TE-768 Thru TE-942 Excpt TE-938
25.50.00	Cargo Compartments
25.50.01	Baggage Webbing Installation
25.60.00	Emergency
25.60.01	Emergency Locator Transmitter
26.00.00	Fire Protection
26.00.00	List of Effective Pages
26.20.00	Extinguishing
26.20.01	Portable Fire Extinguisher (See Chapter 25-23-01)
27.00.00	Flight Controls
27.00.00	List of Effective Pages
27.10.00	Aileron and Tab
27.10.01	Aileron and Aileron Tab Controls
27.10.10	Actuator Assembly
27.10.20	Control Arm and Control Column

Copyright ® Aircraft Technical Publishers

Section	Topic
27.10.30	Aileron Trim Tab Controls, Console
27.20.00	Rudder and Tab
27.20.01	Rudder and Rudder Tab Controls
27.20.10	Rudder Trim Tab Actuator Assembly
27.20.15	Rudder Trim Tab Controls Console
27.20.20	Rudder Pedals and Linkage
27.30.00	Elevator and Tab
27.30.01	Elevator and Elevator Tab Controls
27.30.01	Elevator And Elevator Tab Controls
27.30.11	Elevator Trim Tab Actuator
27.30.20	Elevator Trim Tab Controls Console
27.30.30	Elevator Electric Trim Tab Control
27.50.00	Flaps
27.50.01	Mechanism Installation
27.50.10	Motor and Gearbox
27.50.20	Switch and Position Indicator
27.50.30	Position Transmitter, Limit and Safety Switch
27.70.00	Gust Lock and Dampener
27.70.01	Control Surface and Throttle Lock Assembly
28.00.00	Fuel
28.00.00	List of Effective Pages
28.10.00	Storage
28.10.01	Storage and Interconnect
28.10.10	Storage Vent System
28.10.20	Fuel Cap and Adapter
28.20.00	Distribution
28.20.01	Fuel Distribution
28.20.50	Fuel Selector Valve
28.20.60	Fuel Filter
28.25.10	Fuel Selector Panel
30.00.00	Ice and Rain Protection
30.00.00	List of Effective Pages
30.10.00	Airfoil
30.10.01	Surface Deicer
30.10.01	TC-1 Thru TC-1402 Except TC-350
30.10.10	TC-483 Thru TC-1402 (Automatic)
30.10.20	TC-350,TC-502 Thru TC-1607,TE-1 Thru TE-451 (Auto)
30.10.30	TE-452 Thru TE-942 Except TE-938
30.30.00	Pitot and Static

Copyright ® Aircraft Technical Publishers

Section	Topic
30.30.01	Heated Pitot
30.40.00	Windows, Windshields, and Doors
30.40.01	Windshield Anti-Ice
30.40.10	Windshield Defrost
30.60.00	Propellers/Rotors
30.60.01	Propeller Alcohol Anti-Ice
30.60.10	2 Blade Propeller Electric Anti-Ice
30.62.01	Electrothermal Propeller Deicer
30.62.01	TC-1452 Thru TC-1607
30.64.01	TE-864 Thru TE-942 Except TE-938
31.00.00	Indicating/Recording Systems
31.00.00	List of Effective Pages
31.30.00	Recorders
31.30.01	Flight and Engine Hour Meters
32.00.00	Landing Gear
32.00.00	List of Effective Pages
32.10.00	Main Gear and Doors
32.10.01	Main Landing Gear Installation
32.10.10	Main Landing Gear Assembly
32.10.10	TC-1 Thru TC-354 Except TC-251 & TC-344
32.10.20	TC-251,TC-344,TC-355 Thru TC-1607, TE-1 Thru TE-942 Except TE-938
32.10.30	Main Landing Gear Door Installation
32.20.00	Nose Gear and Doors
32.20.01	Nose Landing Gear Installation
32.20.05	Nose Landing Gear Assembly
32.20.05	TC-1 Thru TC-1392,TC-1397 Thru TC-1401, TC-1403 Thru TC-1607,TE-1 Thru TE-300
32.20.10	TE-1 Thru TC-1607,TE-1 Thru TE-300
32.20.20	TE-301 Thru TE-942 Except TE-938
32.20.30	Nose Landing Gear Door
32.30.00	Extension and Retraction
32.30.01	Main Landing Gear Retract Mechanism
32.30.10	Nose Landing Gear Retract Mechanism
32.30.20	Landing Gear Retract Motor and Gearbox
32.30.30	Landing Gear Retract Motor
32.40.00	Wheels and Brakes
32.40.01	Main Gear Wheel
32.40.02	Main Wheel Assembly

Copyright ® Aircraft Technical Publishers

Section	Topic
32.40.10	Nose Gear Wheel
32.40.20	Brake Assembly
32.40.20	TC-1 Thru TC-422
32.40.21	TC-423 Thru TC-1288
32.40.22	TC-1289 Thru TC-1607,TE-1 Thru TE-942 Except TE-938
32.40.30	Brake Plumbing
32.40.30	TC-1 Thru TC-1221,TE-1 Thru TE-694
32.40.31	TC-1222 Thru TC-1607,TE-695 Thru TE-942 Excpt TE-938
32.40.40	Brake Master Cylinder
32.40.40	TC-1 Thru TC-998
32.40.41	TC-999 Thru TC-1607,TE-1 Thru TE-942 Excpt TE-938
32.40.50	Brake Shuttle Valve
32.40.60	Parking Brake Valve
32.40.60	TC-1 Thru TC-1221,TE-1 Thru TE-694
32.40.61	TC-1222 Thru TC-1607,TE-695 Thru TE-942 Excpt TE-938
32.50.00	Steering
32.50.01	Nose Wheel Steering Installation
32.50.10	Nose Shimmy Damper
32.60.00	Position and Warning
32.60.01	Landing Gear Position Safety and Warning
33.00.00	Lights
33.00.00	List of Effective Pages
33.10.00	Flight Compartment
33.10.01	Optional Instrument Panel Lights
33.11.10	Cabin Door Courtesy Light and Interior Lamps
33.30.00	Cargo and Service Compartments
33.30.01	Nose Baggage Compartment Lights
33.40.00	Exterior
33.40.01	Nose Gear Taxi and Landing Light
33.40.02	Nose Cone Taxi Light (See Chapter 53-50-01)
33.40.03	Nose Gear Taxi Light
33.40.03	TE-301 Thru TE-767
33.40.05	TE-768 Thru TE-834
33.40.07	TE-835 Thru TE-937,TE-939 Thru TE-942
33.40.08	Wing Navigation Lights
33.40.09	Wing Landing Light (See Chapter 57-20-01)
33.44.01	Lower Strobe Light
33.44.10	Strobe Lights
33.45.01	Upper Rotating Beacon
33.46.01	Lower Rotating Beacon

Copyright ® Aircraft Technical Publishers

Section	Topic
33.47.01	Upper Oscillating Beacon
33.48.01	Wing Ice Light
33.49.01	Lower Oscillating Beacon
34.00.00	Navigation
34.00.00	List of Effective Pages
34.10.00	Flight Environment Data
34.10.01	Pitot and Static System
34.10.01	TC-1 Thru TC-1607,TE-1 Thru TE-451
34.10.10	TE-452 Thru TE-942 Except TE-938
34.10.20	Flight Data Instruments
35.00.00	Oxygen
35.00.00	List of Effective Pages
35.00.00	General
35.00.01	Oxygen Storage (Nose Baggage)
35.00.05	Oxygen Storage (Aft Baggage)
35.00.20	Oxygen Storage Installation
35.00.20	TC-1 Thru TC-357
35.00.21	TC-358 Thru TC-954
35.00.22	TC-358 Thru TC-1029,TE-1 Thru TE-344
35.00.23	TC-1030 Thru TC-1607,TE-345 Thru TE-767
35.00.24	TE-768 Thru TE-942 Except TE-938
36.00.00	Pneumatic
36.00.00	List of Effective Pages
36.10.00	Distribution
36.10.01	Pressure System
36.10.10	Fuselage Instrument and Pressure Plumbing
36.20.00	Indicating
36.20.01	Pressure Indicating (See Chapter 39)
37.00.00	Vacuum
37.00.00	List of Effective Pages
37.10.00	Distribution
37.10.01	Vacuum System (See Chapter 71)
37.20.00	Indicating
37.20.01	Vacuum Indicating (See Chapter 39)
39.00.00	Electrical Panels, Parts and Instruments
39.00.00	List of Effective Pages

Copyright ® Aircraft Technical Publishers

Section	Topic
39.10.00	Instrument and Control Panels
39.10.01	Fixed Instr Pnl TC-191 Thru TC-1607,TE-1 Thru TE-451
39.10.10	Fixed Instr Pnl TE-452 Thru TE-767
39.10.20	Fixed Instr Pnl TE-768 Thru TE-942 Except TE-938
39.10.30	Instrument Panel
39.14.01	Floating Instrument Panel
39.14.01	TC-1 Thru TC-190
39.14.10	TC-191 Thru TC-1607,TE-1 Thru TE-451
39.14.20	TE-452 Thru TE-767
39.14.30	TE-768 Thru TE-942 Except TE-938
39.14.40	Instrument Subpanel
39.14.40	TC-191 Thru TC-1607,TE-1 Thru TE-451
39.14.50	TE-452 Thru TE-767
39.14.60	TE-768 Thru TE-942 Except TE-938
39.14.70	Ignition Panel and Outside Air Temperature Indicator
39.14.70	TC-1 Thru TC-190
39.14.80	TC-191 Thru TC-1607,TE-1 Thru TE-942 Except TE-938
39.17.01	Instrument Panel Plumbing
39.17.01	TC-1 Thru TC-190
39.17.10	TC-191 Thru TC-1607,TE-1 Thru TE-451
39.17.20	TE-452 Thru TE-767
39.17.30	TE-768 Thru TE-942 Except TE-938

Structures

52.00.00	Doors
52.00.00	List of Effective Pages
52.10.00	Passenger/Crew
52.10.01	Cabin Door Installation
52.10.01	TC-1 Thru TC-1142,TE-1 Thru TE-767
52.10.02	TC-1143 Thru TC-1607,TE-768 Thru TE-942 Excpt TE-938
52.20.00	Emergency Exit
52.20.01	Emergency Exit
52.30.00	Cargo
52.30.01	Cabin Baggage Door
52.32.01	Utility Baggage Door
52.35.01	Nose Baggage Door
52.35.01	TC-1 Thru TC-1607,TE-1 Thru TE-451
52.35.02	TE-452 Thru TE-942 Except TE-938
52.60.00	Entrance Stairs
52.60.01	Assist Step

Copyright ® Aircraft Technical Publishers

Section	Topic	I
53.00.00	Fuselage	/
53.00.00	List of Effective Pages	
53.10.00	Main Frame	
53.10.01	Nose Structure TC-1 Thru TC-1607	
53.11.01	Nose Structure TE-1 Thru TE-942 Except TE-938	
53.12.01	Keel Assembly	
53.13.01	Firewall Assembly	
53.14.01	Cabin Side Structure	
53.14.01	TC-1 Thru TC-1607 Except TC-350	
53.14.50	TC-350,TE-1 Thru TE-942 Except TE-938	
53.15.01	Cabin Bottom Panel	
53.16.50	Cabin Canopy	
53.16.50	TC-1 Thru TC-1402 Except TC-350	
53.16.51	TC-350,TC-1403 Thru TC-1607, TE-1 Thru TE-942 Except TE-938	
53.17.01	Front Spar Carry Thru Structure	
53.17.01	TC-1 Thru TC-1525 Except TC-1471,TE-1 Thru TE-896	
53.17.02	TC-1471,TC-1526 Thru TC-1607, TE-897 Thru TE-942 Except TE-938	
53.17.50	Rear Spar Carry Thru Structure	
53.17.50	TC-1 Thru TC-1525 Except TC-1471,TE-1 Thru TE-896	
53.17.52	TC-1471,TC-1526 Thru TC-1607 TE-897 Thru TE-942 Except TE-938	
53.18.01	Aft Fuselage Structure	
53.20.00	Auxiliary Structure	
53.20.01	Floorboard Installation	
53.25.01	Pedestal Structure	
53.30.00	Plates and Skin	
53.30.01	Fuselage Skins TC-1 Thru TC-1607 Except TC-350	
53.32.01	Fuselage Skins TC-350,TE-1 Thru TE-942 Except TE-938	
53.50.00	Aerodynamic Fairings	
53.50.01	Nose Cone	
53.50.01	TC-1 Thru TC-501	
53.50.10	TC-502 Thru TC-1607, TE-1 Thru TE-942 Except TE-938	
53.50.20	Nose Cone (Used Only on Radar Equipped Aircraft)	
53.51.01	Tail Cone	
53.52.01	Dorsal Fairing	
53.52.01	TC-1 Thru TC-954 Except TC-350	
53.52.02	TC-350,TC-955 Thru TC-1091,TE-1 Thru TE-558	
53.52.03	TC-1092 Thru TC-1607,TE-559 Thru TE-942 Excpt TE-938	

 Copyright ® Aircraft Technical Publishers

Section	Topic
54.00.00	Nacelles/Pylons
54.00.00	List of Effective Pages
54.10.00	Main Frame
54.10.01	Nacelle Structure
54.30.00	Plates and Skins
54.30.01	Nacelle Skins
54.50.00	Fillets and Fairings
54.50.01	Nacelle Fairing and Fillets
55.00.00	Stabilizers
55.00.00	List of Effective Pages
55.00.00	General
55.00.01	Empennage Installation
55.00.01	TC-1 Thru TC-1607
55.00.02	TE-1 Thru TE-942 Except TE-938
55.10.00	Horizontal Stabilizer or Canard
55.10.01	Horizontal Stabilizer
55.10.01	TC-1 Thru TC-1607
55.11.01	TE-1 Thru TE-942 Except TE-938
55.20.00	Elevator
55.20.01	Elevator and Tab
55.20.01	TC-1 Thru TC-1607
55.21.01	TE-1 Thru TE-942 Except TE-938
55.30.00	Vertical Stabilizer
55.30.01	Vertical Stabilizer
55.40.00	Rudder
55.40.01	Rudder and Tab Assembly
56.00.00	Windows
56.00.00	List of Effective Pages
56.10.00	Flight Compartment
56.10.01	Windshield and Windows
56.10.01	TC-1 Thru TC-1042,TE-1 Thru TE-451
56.10.10	TC-1043 Thru TC-1607,TE-452 Thru TE-942 Excpt TE-938
56.20.00	Passenger Compartment
56.20.01	Window Installation Aft
56.30.00	Door
56.30.01	Cabin Door Window (See Chapter 52)
57.00.00	Wings

Copyright ® Aircraft Technical Publishers

Section	Topic
57.00.00	List of Effective Pages
57.10.00	Mainframe
57.10.01	Complete Wing Assembly
57.10.10	Wing Section Assembly
57.10.20	Wing Front Spar
57.10.20	TC-1 Thru TC-1442,TE-1 Thru TE-862
57.10.21	TC-1443 Thru TC-1607,TE-863 Thru TE-942 Excpt TE-938
57.10.30	Wing Rear Spar
57.20.00	Auxiliary Structure
57.20.01	Leading Edge and Front Spar Assembly
57.20.05	Wing Inboard Leading Edge
57.20.05	TC-1 Thru TC-399
57.20.06	TC-400 Thru TC-1607,TE-1 Thru TE-942 Except TE-938
57.20.10	Wing Outboard Leading Edge
57.20.10	TC-1 Thru TC-399 (With Fuel)
57.20.12	TC-400 Thru TC-1607,TE-1 Thru TE-942 Except TE-938
57.20.15	Rear Spar and Trailing Edge
57.20.20	Wing Tip TC-1 Thru TC-399
57.20.21	Wing Tip TC-400 Thru TC-1600,TE-1 Thru TE-767
57.20.22	Wing Tip TE-768 Thru TE-842 Except TE-938
57.20.23	Wing Tip Extended
57.30.00	Plates and Skins
57.30.01	Wing Skins
57.40.00	Attach Fittings
57.40.01	Wings Installation
57.50.00	Flight Surface
57.50.01	Flap Assembly
57.50.10	Aileron Assembly

Propeller/Rotor

61.00.00	Propellers/Propulsors
61.00.00	List of Effective Pages
61.10.00	Propeller Assembly
61.10.01	2 Blade McCauley Propeller Assembly
61.10.01	TC-1 Thru TC-472 Except TC-371 & TC-408
61.10.02	TC-371,TC-TC-408,TC-473 Thru TC-1415
61.10.03	2 Blade Hartzell Propeller Assembly
61.10.04	3 Blade Hartzell Propeller Assembly
61.10.04	TC-502 Thru TC-1418
61.10.05	TC-1419 Thru TC-1607

 Copyright ® Aircraft Technical Publishers

Section	Topic
61.12.01	2 Blade McCauley Propeller
61.12.02	2 Blade Hartzell Propeller
61.12.03	3 Blade McCauley Propeller
61.12.04	3 Blade Hartzell Propeller
61.20.00	Controlling
61.20.01	Propeller Governor
61.20.01	TC-1 Thru TC-936 Except TC-663
61.20.02	TC-663,TC-937 Thru TC-1398 & TC-1402
61.20.03	TC-1399 Thru TC-1607 Except TC-1402
61.22.01	TE-1 Thru TE-851
61.22.02	TE-852 Thru TE-942 Except TE-938
61.24.01	Propeller Accumulator

Power Plant

71.00.00	Power Plant
71.00.00	List of Effective Pages
71.00.00	General
71.00.01	Power Plant Installation TC-1 Thru TC-501
71.00.02	Power Plant Installation TC-502 Thru TC-1254
71.00.03	Power Plant Installation TC-1255 Thru TC-1607
71.02.01	Power Plant TE-1 Thru TE-849
71.02.02	Power Plant TE-850 Thru TE-942 Except TE-938
71.10.00	Cowling
71.10.01	Engine Cowling TC-1 Thru TC-1607
71.12.01	Engine Cowling TE-1 Thru TE-942 Except TE-938
71.60.00	Air Intakes
71.60.01	Engine Baffles TC-1 Thru TC-1607
71.62.01	Engine Baffles TE-1 Thru TE-942 Except TE-938
71.64.01	Induction Air System TC-1 Thru TC-1607
71.66.01	Induction Air System TE-1 Thru TE-942 Except TE-938
71.70.00	Engine Drains
71.70.01	Engine Drains TC-1 Thru TC-1607
71.72.01	Engine Drains TE-1 Thru TE-942 Except TE-938
72.00.00	Engine
72.00.00	List of Effective Pages
72.00.00	General
72.00.01	Engine (Refer to IO-470/520 Series Parts Catalog)
73.00.00	Engine Fuel and Control

Copyright ® Aircraft Technical Publishers

Section	Topic
73.00.00	List of Effective Pages
73.10.00	Distribution
73.10.01	Engine Fuel Plumbing TC-1 Thru TC-1607
73.12.01	Engine Fuel Plumbing TE-1 Thru TE-942 Except TE-938
76.00.00	Engine Controls
76.00.00	List of Effective Pages
76.10.00	Power Control
76.10.01	Engine Controls TC-1 Thru TC-1607
76.12.01	Engine Controls TE-1 Thru TE-942 Except TE-938
76.15.01	Console Engine Controls
76.16.01	Console Engine Controls and Throttle Warning
77.00.00	Engine Indicating
77.00.00	List of Effective Pages
77.20.00	Temperature
77.20.01	Engine Temperature Indicating System (See Chapter 78)
78.00.00	Exhaust
78.00.00	List of Effective Pages
78.10.00	Collector/Nozzle
78.10.01	Exhaust System
78.12.01	Engine Exhaust System
78.12.01	TE-1 Thru TE-937,TE-939 Thru TE-942
78.13.01	TC-1 Thru TC-1607,TE-1 Thru TE-937,TE-939 Thru TE-942
79.00.00	Oil
79.00.00	List of Effective Pages
79.00.00	General
79.00.01	Eng Oil System (Refer to IO-470/IO-520 Parts Catalog)
80.00.00	Starting
80.00.00	List of Effective Pages
80.10.00	Cranking
80.10.01	Starter

*** End of Index ***

Copyright ® Aircraft Technical Publishers

MFG.

INTRO

Raytheon Aircraft

Beech Baron®

55, A55, and B55 (B55A)
(TC-1 thru TC-1607)
C55 (C55A), D55 (D55A) and E55 (E55A)
(TE-1 thru TE-937, TE-939 thru TE-942)

Illustrated Parts Catalog

Volume 1
Chapters 11 thru 35

NOTE

This manual was formerly called the Beechcraft Baron 55 Series Illustrated Parts Catalog.

NOTICE

Refer to the applicable Wiring Diagram Manual for wiring diagrams and associated electrical components parts breakdown.

Copyright © Raytheon Aircraft Company 2001

P/N 96-590010-13B
Reissued: March 10, 1978

P/N 96-590010-13B3
Revised: August 01, 2001

Raytheon Aircraft

Beech Baron®

55, A55, and B55 (B55A)
(TC-1 thru TC-1607)
C55 (C55A), D55 (D55A) and E55 (E55A)
(TE-1 thru TE-937, TE-939 thru TE-942)

Illustrated Parts Catalog

Volume 2
Chapters 36 thru 80

NOTE

This manual was formerly called the Beechcraft Baron 55 Series Illustrated Parts Catalog.

NOTICE

Refer to the applicable Wiring Diagram Manual for wiring diagrams and associated electrical components parts breakdown.

Copyright © Raytheon Aircraft Company 2001

P/N 96-590010-13B
Reissued: March 10, 1978

P/N 96-590010-13B3
Revised: August 01, 2001

Published By
RAYTHEON AIRCRAFT COMPANY
P.O. Box 85
Wichita, Kansas 67201
U.S.A

NOTE

Where Beech Aircraft Corporation is referred to in this publication, it will be taken to read Raytheon Aircraft Company.

EXPORT STATEMENT

Exported under the authority of license exception: TSU.
"These commodities, technology or software were exported from the United States in accordance with Export Administration Regulations. Diversion contrary to U.S. law prohibited."

Raytheon

Raytheon Aircraft Company

Member of GAMA

GAMA General Aviation Manufacturers Association

RECORD OF REVISIONS

MFG REV NO	DESCRIPTION	ISSUE DATE	ATP REV DATE	INSERTED BY
B3	See Highlights	8/1/01	10/1/01	ATP/MT

LIST OF EFFECTIVE REVISIONS

Always destroy superseded pages when you insert revised pages.

Title Page (Volume 1) ..... August 01, 2001
Logo Page ..... August 01, 2001
Title Page (Volume 2) ..... August 01, 2001
Logo Page .....
"A" Page B3

PART NUMBER	DATE	CHAPTERS AFFECTED
96-590010-13	February 10, 1976	Original Issue
96-590010-13B	March 10, 1978	Reissue
96-590010-13B1	April 30, 1984	Introduction, Alpha-Numeric, All Chapters.
96-590010-13B2	April 5, 1985	Introduction, Alpha-Numeric, 11, 21, 24, 25, 26, 27, 28, 30, 31, 32, 33, 34, 35, 36, 37, 39, 52, 53, 55, 56, 57, 61, 71, 72, 74, 76, 77, 78, 79.
96-590010-13B3	August 1, 2001	Alpha-Numeric, 39

NOTE: A List of Effective pages will be in the front of each chapter.

Basic publications are assigned a part number which appears on the title page with the date of the issue. Subsequent revisions are identified by the addition of a revision code after the part number. A1 after a part number denotes the first revision to the basic publication, A2 the second, etc. Occasionally, it is necessary to completely reissue and reprint a publication for the purpose of obsoleting a previous issue and outstanding revisions thereto. As these replacement reissues are made, the code will also change to the next successive letter of the alphabet at each issue. For example, B for the first reissue, C for the second, etc..

When ordering a handbook, give the basic number, and the reissue code when applicable, if a complete up-to-date publication is desired. Should only revision pages be required, give the basic number and revision code for the particular set of revision pages you desire.

RECORD OF TEMPORARY REVISIONS

TEMP REV NO	DESCRIPTION	ISSUE DATE	ATP REV DATE	INSERT BY	DATE REMOVED	REV INCOR	REMOVE BY

Raytheon Aircraft

Instruction Pages
Revision 96-590010-13B3
to the
Beech Baron 55 Series
Illustrated Parts Catalog
P/N 96-590010-13B Reissued: March 10, 1978

REMOVE PAGE	INSERT PAGE	DATED
Title Page (Volume 1)	**Title Page (Volume 1)**	08/01/01
Logo Page	**Logo Page**	
"A" Page	**"A" Page**	B3
Alpha-Numeric Index Effectivity	**Alpha-Numeric Index Effectivity**	
Page 1	Page 1	08/01/01
Alpha-Numeric Index	**Alpha-Numeric Index**	
Page 1	Page 1	08/01/01
thru	thru	
Page 82	Page 82	08/01/01
39-00-00 List of Pages & Table of Contents	**39-00-00 List of Pages & Table of Contents**	
Page 1	Page 1	08/01/01
Page 2	Page 2	08/01/01
39-14-60	**39-14-60**	
Page 1	Page 1	03/10/78
Page 2	Page 2	08/01/01
Page 3	Page 3	08/01/01
Page 4	Page 4	03/10/78
Title Page (Volume 2)	**Title Page (Volume 2)**	08/01/01
Logo Page	Logo Page	

This page may be discarded after the B3 Revision is incorporated into the manual.

INTRODUCTION

LIST OF PAGE EFFECTIVITY
Volume 1

SECTION	PAGE	DATE
INTRODUCTION-EFFECTIVITY	1	April 5, 1985
INTRODUCTION-TEXT	1	April 5, 1985
	2	April 30, 1984
	3 thru 7	April 30, 1984
		April 30, 1984
INTRODUCTION-ATA INDEX GUIDE	8 thru 21	April 5, 1985
		April 5, 1985
INTRODUCTION-ALPHABETICAL INDEX	22 thru 32	April 5, 1985
		April 5, 1985

"END"

INTRODUCTION

The purpose of this catalog is to provide a method for identifying and ordering spare parts for your BEECHCRAFT Baron 55. See the following paragraphs for detailed information. To order replacement parts for electrical components, refer to the applicable BEECHCRAFT **Shop Manual**.

ORGANIZATION

This illustrated parts catalog is prepared in accordance with the ATA (Air Transport Association) Specification No. 100 format.

The contents are organized at four levels as follows:

Group - identified by blue divider tabs. These are primary divisions of the manual that enable broad separation of content. Typical of this division is the separation between the Airframe Systems and the Power Plant.

Chapter - identified by yellow divider tabs. The various groups are broken down into major systems such as Air Conditioning, Electrical Power, Landing Gear, etc. The systems are arranged more or less alphabetically rather than by precedence or importance. They are assigned a number, which becomes the first element of a standardized numbering system. Thus, the element "28" of the number 28-00-00 refers to the chapter "Fuel". Everything concerning the fuel system will be covered in this chapter.

Sub-Section - The major systems of an airplane are broken down into sub-sections, and are identified by the second element of the standardized numbering system. The number "40" of 28-40-00 identifies the indicating portion of the fuel system.

Unit - The individual units within a sub-section may be identified by the third element of the standard numbering system, such as 28-40-01. The number "01" is assigned by the manufacturer and may, or may not, be used and will vary in usage.

APPLICATION

Any publication conforming to GAMA or ATA 100 format utilizes the same basic numbering system, even though some chapters may be omitted because they are not applicable to that airplane or publication. Thus, whether the publication is a Maintenance Manual, a Parts Catalog, or a Wiring Diagram Manual, a person requiring information concerning the fuel storage or fuel indicating portion of the fuel system would refer to Chapter 28, FUEL. The List of Pages and Table of Contents located at the beginning of the chapter provides a list of sub-sections and units covered within the chapter.

For example:

28-00	General
28-10	Storage (Tanks, cells, necks, caps instruments, etc.)
28-20	Distribution (Fuel lines, pumps, valves, controls, etc.)
28-30	Dump (If in-flight dumping system is installed, it would appear here.)
28-40	Indicating (Quantity, temperature, pressure etc., does not include engine fuel flow or pressure.)

Carrying this example further, fuel indication, fuel control panel, could be assigned the number 28-41-01.

LIST OF EFFECTIVE REVISIONS

The List of Effective Revisions following the logo page of the manual lists the revisions currently effective for the manual.

NOTE

Neither Service Publications, Reissues, nor Revisions are automatically provided to the holders of this manual. For information on how to obtain "Revision Service" applicable to this manual, consult a BEECHCRAFT Aero or Aviation Center or International Distributor or Dealer, or refer to the latest revision of BEECHCRAFT Service Bulletin No. 2001.

ATA-100 SYSTEM - CHAPTER INDEX GUIDE

The ATA-100 System-Chapter Index Guide is a listing of the Groups, Chapters, Sub-Sections and Units which are applicable to this manual. The Chapter Index Guide is located in and is part of this Introduction.

ALPHABETICAL INDEX

The Alphabetical Index is a listing of component items or systems and the Chapter, Sub-Section and Unit in which they can be located. The Alphabetical Index is located in and is part of this Introduction.

ALPHA-NUMERIC INDEX

The Alpha-Numeric Index, contained in volume one only, is a complete alpha-numerical listing in tabular form of each part number listed, except those identified as attaching parts. Parts common to more than one chapter or assembly will be listed once for each time the part appears in order to reflect the different chapters, sub-sections, etc.

The Alpha-Numeric Index follows this Introduction.

LIST OF PAGES AND TABLE OF CONTENTS

The List of Pages and Table of Contents following each chapter divider tab, lists the issue date of each page that is effective for that chapter, the titles and, if applicable, the serial effectivity of the unit(s) covered in that chapter.

ILLUSTRATED PARTS LIST

The Illustrated Parts List consists of installations broken down into assemblies, sub-assemblies, detail parts, and attaching parts. A separation symbol (---*---) follows the listing of attaching parts to distinguish them from the assembly breakdown.

If two assemblies are made up of a majority of identical parts, or the assemblies are opposite, i.e., left and right hand, the assemblies are listed together with their detail parts listed as common for both assemblies. In this case only the left or right hand part, but not both, is indexed and illustrated, with the difference between left and right hand parts noted in the description column. The Units Per Assembly column indicates the number of detail parts required per assembly, NP indicates "Non Procurable" and AR indicates "As Required". The notation "(See Chapter)" indicates that this assembly and its detail parts are illustrated and broken down in another chapter or another sub-section and unit within the same chapter.

When a number is shown in the Usable On Code Column, refer to the Codes of Effectivity at the end of the listing of parts for that particular unit to determine airplane serial effectivity. Each unit has its own distinct coding, i.e., the code number denoting airplane serial effectivity for one unit may not be the same for another unit.

INDENTURE COLUMN

BEECHCRAFT

ILLUSTRATED PARTS CATALOG

GAMA/ATA CODE & INDEX NO.	PART NO.	1234567 DESCRIPTION	UNITS PER ASSY	USABLE ON CODE
20-10	101-524078-1	ACTUATOR INSTL,RUDDER TRIM TAB.	NP	
	101-524092-3	. PUSH ROD ASSY,TAB CONTROL/RUDDER TRIM/. . . .	1	
		/ATTACHING PARTS/		
- 1	AN174-13A	. BOLT.	1	
- 2	AN174-11A	. BOLT.	1	
	AN960-416L	. WASHER.	2	
	MS21042-4	. NUT	2	
		——*——		
- 3	101-524093-1	. . CLEVIS.	1	
- 4	101-524095-1	. . TIGHTENER	1	
- 5	101-524094-1	. . CLEVIS.	1	
- 6	101-524096-1	. . TIGHTENER	1	
- 7	MS21245L7	. . NUT	2	
- 8	AN960-716	. . WASHER.	2	
- 9	AN316-4R	. . NUT	1	
- 10	AN490HT6P	. . ROD END	1	
- 11	101-524092-7	. . TUBE.	1	
	101-524079-3	. ACTUATOR ASSY,RUDDER TRIM TAB	1	
		/ATTACHING PARTS/		
- 12	AN4-11A	. BOLT.	4	
	AN960-416L	. WASHER.	4	
		——*——		
- 13	REP4M6-4	. . ROD END	1	
		/ATTACHING PARTS/		
- 14	NAS509-6	. . NUT	1	
	NAS513-6	. . WASHER.	1	
		——*——		
- 15	101-524073-3	. . HOUSING ASSY.	1	
		/ATTACHING PARTS/		
- 16	MS24694-S55	. . SCREW	2	
	AN960-10	. . WASHER.	2	
	MS21042-3	. . NUT	2	
		——*——		
	101-524073-7	. . . HOUSING	1	
	FF-609-3	. . . BEARING	1	
- 17	101-524076-1	. . GUIDE	1	
		/ATTACHING PARTS/		
- 18	AN3-7A	. . BOLT.	1	
	AN960-10	. . WASHER.	1	

05/16/79

27-20-10
PAGE 3

90-606-62

The above example from chapter 27 shows the indenture system used to indicate parts included in any given assembly. By this indenture system, parts shown in column 2 are component parts of the immediately preceding assembly in column 1; parts shown in column 3 are component parts of the immediately preceding assembly in column 2, etc., through column 7. As an example, if the 101-524092-3 Pushrod Assembly (see checked item in the above illustration) is ordered, it would include items 3 through 11. Note that items 1 and 2, bolts, washers and nuts (the attaching parts) are not a part of the pushrod assembly. There may be instances when a part number consists of more than 16 characters; in that case an asterisk (*) will appear at the end of the part number and the remainder of the number will be in the description field.

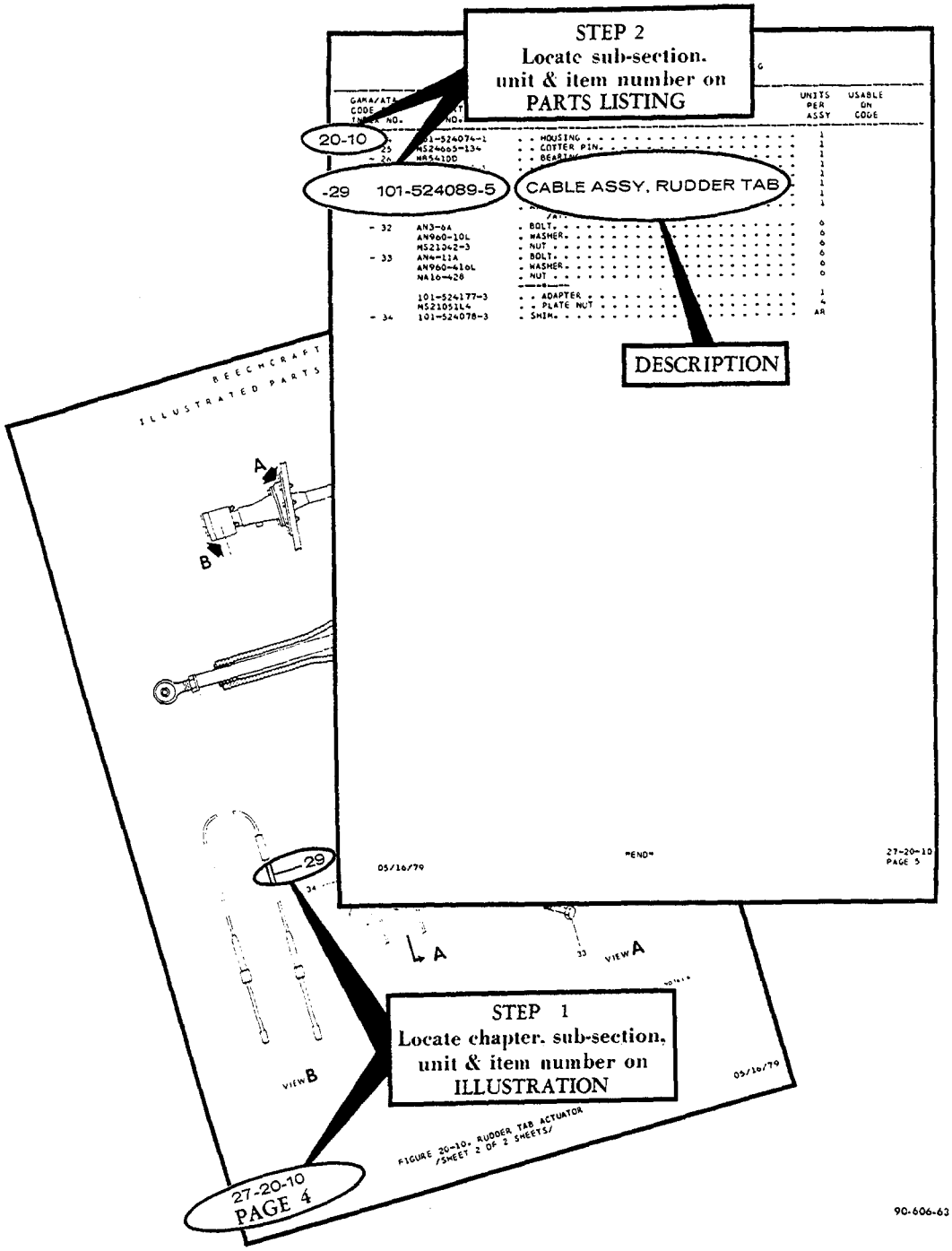

Consult the list of pages and table of contents in front of each chapter for the sub-section and unit in which the part is listed. Immediately preceding the listing of parts is an illustration (see step 1 in the example shown above). The item number adjacent to the illustrated part will appear in the listing of parts in the column entitled "Sub-Section, Unit and Item Number" (see step 2 above). Immediately to the right of the item number will be found the required part number.

SUPERSEDED PART NUMBERS

Superseded Part Numbers will appear in the Alpha-Numeric Index with the letter "S" just to the left of the number. They should also appear in the description field of the parts list, for example "...BOLT/supersedes AN3-7/". In this instance, AN3-7 would be the superseded number.

REVISED LINES

Revised Lines in the Parts List are indicated by the letter "R" appearing just to the left of the part number column. The letter "R" indicates that the line has either been revised or added.

ATA 100 Page Block Guide

Pages are numbered consecutively for each unit beginning with page 1. The end of each unit is designated by the word "END".

An example:

28-10-01	Page 1	Title
28-10-01	Page 2	Illustration
28-10-01	Page 3	Text
		END
28-10-10	Page 1	Title
28-10-10	Page 2	Illustration
28-10-10	Page 3	Text
		END
28-10-20	Page 1	Title
28-10-20	Page 2	Illustration
28-10-20	Page 3	Text
28-10-20	Page 4	Illustration
28-10-20	Page 5	Text
		END

HOW TO LOCATE A PART WHEN THE PART NUMBER IS KNOWN

If the part number is known and the Illustrated Parts List must be consulted for model applicability or description, refer to the Alpha-Numeric Index for the Chapter, Sub-Section, Unit, and Item Number of the required part. Refer to the example shown below.

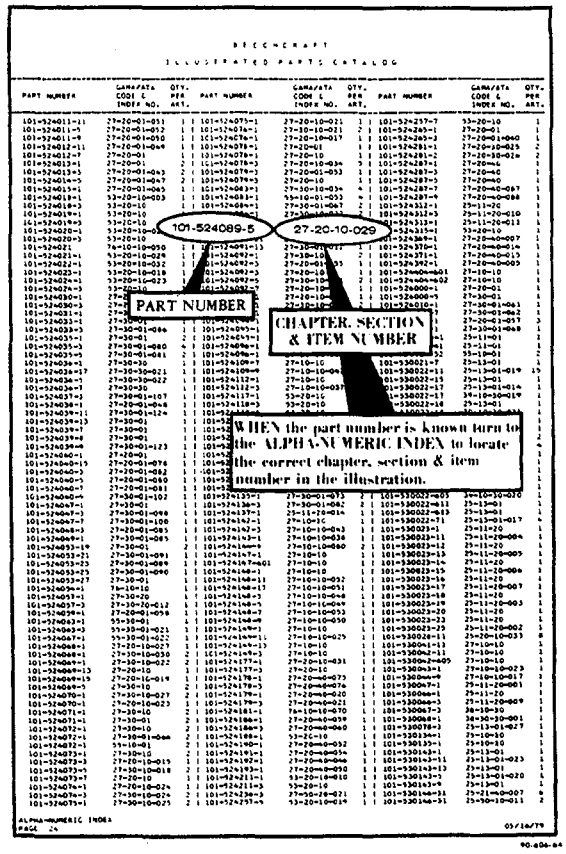

IMPORTANT! WHEN ORDERING PARTS

Always use the COMPLETE manufacturer's part number listed in the Part Number column. Be sure the "Airplane Serial Number" accompanies all spare parts orders.

Delays in filling spare parts orders often occur as a result of incomplete information being furnished with the original order, i.e., lack of model designation and airplane serial number. This information is provided on the serial placard located on the main access door frame, and indicated by check marks on the example below.

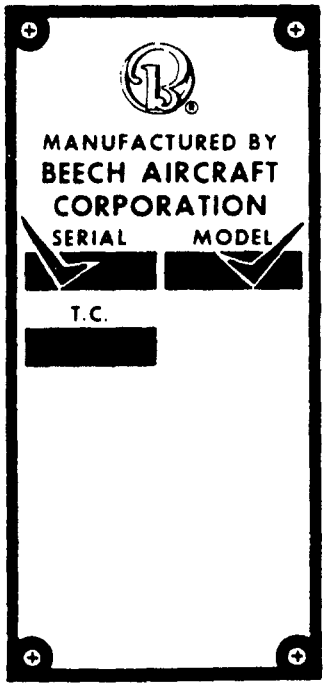

NOTICE

Beech Aircraft Corporation expressly reserves the right to supersede, cancel and/or declare obsolete any part, part numbers, kits or publications that may be referenced in this manual without prior notice.

WARNING

This parts catalog has but one function; to facilitate ordering replacement parts for the BEECHCRAFT Baron 55.

Illustrations in this catalog are to be used only as aids in identifying parts and should not be used as a maintenance reference for reassembly.

Address all orders to:

Commercial Product Support
Beech Aircraft Corporatiion
Wichita Kansas 67201
U.S.A.

MICROFICHE/AEROFICHE

The General Aviation Manufacturers Association has developed a specification for microfiche and registered the name Aerofiche for use by all GAMA Members. This manual is available on Aerofiche or on paper, and either form of this manual may be obtained from BEECHCRAFT Aero or Aviation Centers and International Distributors or Dealers.

WARNING

Use only genuine BEECHCRAFT or BEECHCRAFT approved parts obtained from BEECHCRAFT approved sources, in connection with the maintenance and repair of Beech airplanes.

Genuine BEECHCRAFT parts are produced and inspected under rigorous procedures to insure airworthiness and suitability for use in Beech airplane applications. Parts purchased from sources other than BEECHCRAFT, even though outwardly identical in appearance may not have had the required tests and inspections performed, may be different in fabrication techniques and materials, and may be dangerous when installed in an airplane.

Salvaged airplane parts, reworked parts obtained from non-BEECHCRAFT approved sources, or parts, components, or structural assemblies, the service history of which is unknown or cannot be authenticated, may have been subjected to unacceptable stresses or temperatures or have other hidden damage, not discernible through routine visual or usual nondestructive testing techniques. This may render the part, component or structural assembly, even though originally manufactured by BEECHCRAFT, unsuitable and unsafe for airplane use.

BEECHCRAFT expressly disclaims any responsibility for malfunctions, failures, damage or injury caused by use of non-BEECHCRAFT approved parts.

ATA-100 SYSTEM - CHAPTER INDEX GUIDE

THE FOLLOWING IS AN ATA-100 CHAPTER INDEX GUIDE FOR USE WITH THIS PARTS CATALOG.

NOTE * THE FOLLOWING CHAPTERS ARE NOT APPLICABLE TO THIS PARTS CATALOG

22, 29, 38, 49, 51, 75, 81, 82, 83, 95.

CHAPTER	SUB-SECTION	TITLE
AIRCRAFT GENERAL		
11		PLACARDS & MARKINGS
	11-00	GENERAL
	11-00-00	LIST OF PAGES & TABLE OF CONTENTS . . . . .
	11-20	EXTERIOR PLACARDS & MARKINGS
	11-20-01	EXTERIOR PLACARDS . . . . . TC-1 THRU TC-1607,TE-1 THRU TE-767
	11-20-10	EXTERIOR PLACARDS . . . . . TE-768 THRU TE-942 EXCEPT TE-938
	11-30	INTERIOR PLACARDS & MARKINGS
	11-30-01	INTERIOR PLACARDS . . . . . TC-1 THRU TC-1607,TE-1 THRU TE-767
	11-30-10	INTERIOR PLACARDS . . . . . TE-768 THRU TE-942 EXCEPT TE-938
AIRFRAME SYSTEMS		
21		ENVIRONMENTAL SYSTEMS
	21-00	GENERAL
	21-00-00	LIST OF PAGES & TABLE OF CONTENTS . . . . .
	21-20	DISTRIBUTION
	21-20-01	HEAT AND VENT DUCTS . . . . . TC-1 THRU TC-954
	21-20-10	HEAT AND VENT DUCTS . . . . . TC-955 THRU TC-1607 AND TE-1 THRU TE-942 EXCEPT TE-938
	21-22-01	OVERHEAD PANEL AND DUCTS. . . . . TC-1 THRU TC-954 EXCEPT TC-350
	21-22-10	OVERHEAD PANEL AND DUCTS. . . . . TC-350 AND TC-955 THRU TC-963 TE-1 THRU TE-10
	21-22-20	OVERHEAD PANEL AND DUCTS. . . . . TC-964 THRU TC-1402 TE-11 THRU TE-767
	21-22-30	OVERHEAD PANEL AND DUCTS. . . . . TE-768 THRU TE-846
	21-22-40	OVERHEAD PANEL AND DUCTS. . . . . TC-1403 THRU TC-1607 TE-847 THRU TE-942 EXCEPT TE-938
	21-22-50	DUCT INSTL,OVERHEAD AIR . . . . . TC-1093 THRU TC-1607 TE-560 THRU TE-942 EXCEPT TE-938
	21-40	HEATING
	21-40-01	CABIN HEATER. . . . .
	21-40-20	HEATER FUEL PLUMBING. . . . .
	21-40-40	HEATER FUEL PUMP. . . . .
	21-40-60	HEATER BLOWER . . . . .

ATA-100 SYSTEM - CHAPTER INDEX GUIDE

CHAPTER	SUB-SECTION	TITLE
23		COMMUNICATIONS
	23-00	GENERAL
	23-00-00	LIST OF PAGES & TABLE OF CONTENTS . . . . .
	23-60	STATIC DISCHARGING
	23-60-01	STATIC WICKS. . . . .
24		ELECTRICAL POWER
	24-00	GENERAL
	24-00-00	LIST OF PAGES & TABLE OF CONTENTS . . . . .
	24-00-01	FUSELAGE ELECTRICAL EQUIPMENT . . . . .
	24-01-01	WING ELECTRICAL . . . . .
	24-30	DC GENERATION
	24-30-01	ALTERNATOR. . . . . TC-350,TC-763,TC-768,TC-770,TC-784,TC-816 AND TE-1 THRU TE-942 EXCEPT TE-938
	24-30-10	GENERATOR /25 AMP/. . . . . TC-1 THRU TC-1607 EXCEPT TC-350,TC-763,TC-768, TC-770,TC-784 AND TC-816
	24-30-20	BATTERY INSTALLATION. . . . .
	24-40	EXTERNAL POWER
	24-40-01	EXTERNAL POWER RECEPTACLE . . . . .
25		EQUIPMENT/FURNISHINGS
	25-00	GENERAL
	25-00-00	LIST OF PAGES & TABLE OF CONTENTS . . . . .
	25-10	FLIGHT COMPARTMENT
	25-10-01	LOOSE TOOLS AND ACCESSORIES . . . . .
	25-13-01	PILOT AND COPILOT SEATS . . . . . TC-1 THRU TC-190
	25-13-10	PILOT AND COPILOT SEATS . . . . . TC-191 THRU TC-1298,TE-1 THRU TE-451
	25-13-20	PILOT AND COPILOT SEATS . . . . . TE-452 THRU TE-767
	25-13-30	PILOT AND COPILOT SEATS . . . . . TC-1299 THRU TC-1402,TE-768 THRU TE-846
	25-13-40	PILOT AND COPILOT SEATS . . . . . TC-1403 THRU TC-1607 TE-847 THRU TE-942 EXCEPT TE-938
	25-16-01	GLARESHIELD INSTALLATION. . . . . TC-1 THRU TC-190
	25-16-10	GLARESHIELD INSTALLATION. . . . . TC-191 THRU TC-1042,TE-1 THRU TE-451
	25-16-20	GLARESHIELD INSTALLATION. . . . . TC-1043 THRU TC-1402,TE-452 THRU TE-767
	25-16-30	GLARESHIELD INSTALLATION. . . . . TC-1403 THRU TC-1607 TE-768 THRU TE-942 EXCEPT TE-938
	25-20	PASSENGER COMPARTMENT
	25-20-01	PASSENGER SEATS . . . . . TC-1 THRU TC-190
	25-20-10	PASSENGER SEATS . . . . . TC-191 THRU TC-1298,TE-1 THRU TE-451
	25-20-20	PASSENGER SEATS . . . . . TC-1299 THRU TC-1607 TE-452 THRU TE-942 EXCEPT TE-938

ATA-100 SYSTEM - CHAPTER INDEX GUIDE

CHAPTER	SUB-SECTION	TITLE
25		EQUIPMENT/FURNISHINGS (CONT)
	25-20	PASSENGER COMPARTMENT (CONT)
	25-21-01	FIFTH SEAT. . . . . TC-1 THRU TC-640
	25-21-10	FOLDING FIFTH AND SIXTH SEAT. . . . . TC-238 THRU TC-640
	25-21-20	SEATS,SPECIAL . . . . . TC-641 THRU TC-1298,TE-1 THRU TE-767
	25-21-30	SEATS,SPECIAL . . . . . TC-1299 THRU TC-1607 TE-768 THRU TE-942 EXCEPT TE-938
	25-22-01	CABIN UPHOLSTERY. . . . . TE-1 THRU TE-451
	25-22-02	CABIN UPHOLSTERY. . . . . TC-1 THRU TC-190
	25-22-03	CABIN UPHOLSTERY. . . . . TC-191 THRU TC-1607
	25-22-05	CABIN UPHOLSTERY. . . . . TE-452 THRU TE-767
	25-22-07	CABIN UPHOLSTERY. . . . . TE-768 THRU TE-942 EXCEPT TE-938
	25-23-01	CABIN FURNISHING/MISCELLANEOUS/ . . . . .
	25-28-01	CARPET AND SPAR COVERS. . . . . TC-1 THRU TC-190
	25-28-10	CARPET AND SPAR COVERS. . . . . TC-191 THRU TC-1402,TE-1 THRU TE-767
	25-28-20	CARPET AND SPAR COVERS. . . . . TC-1403 THRU TC-1607 TE-768 THRU TE-942 EXCEPT TE-938
	25-50	CARGO COMPARTMENTS
	25-50-01	BAGGAGE WEBBING INSTALLATION. . . . .
	25-60	EMERGENCY
	25-60-01	EMERGENCY LOCATOR TRANSMITTER . . . . .
26		FIRE PROTECTION
	26-00	GENERAL
	26-00-00	LIST OF PAGES & TABLE OF CONTENTS . . . . .
	26-20	EXTINGUISHING
	26-20-01	PORTABLE FIRE EXTINGUISHER/REFERENCE/ . . . . .
27		FLIGHT CONTROLS
	27-00	GENERAL
	27-00-00	LIST OF PAGES & TABLE OF CONTENTS . . . . .
	27-10	AILERON & TAB
	27-10-01	AILERON & AILERON TAB CONTROLS. . . . .
	27-10-10	ACTUATOR ASSY,AILERON . . . . .
	27-10-20	CONTROL ARM AND CONTROL COLUMN. . . . .
	27-10-30	AILERON TRIM TAB CONTROLS,CONSOLE . . . . .
	27-20	RUDDER & TAB
	27-20-01	RUDDER & RUDDER TAB CONTROLS. . . . .
	27-20-10	ACTUATOR ASSY,RUDDER TRIM TAB . . . . .
	27-20-15	RUDDER TRIM TAB CONTROLS,CONSOLE. . . . .
	27-20-20	RUDDER PEDALS AND LINKAGE . . . . .
	27-30	ELEVATOR & TAB
	27-30-01	ELEVATOR & ELEVATOR TAB CONTROLS. . . . .

ATA-100 SYSTEM - CHAPTER INDEX GUIDE

CHAPTER	SUB-SECTION	TITLE
27		FLIGHT CONTROLS (CONT)
	27-30	ELEVATOR & TAB (CONT)
	27-30-11	ELEVATOR TRIM TAB ACTUATOR. . . . .
	27-30-20	ELEVATOR TRIM TAB CONTROLS,CONSOLE. . . . .
	27-30-30	ELEVATOR ELECTRIC TRIM TAB CONTROL. . . . . TE-633 THRU TE-937,TE-939 THRU TE-942
	27-50	FLAPS
	27-50-01	FLAP MECHANISM INSTALLATION . . . . .
	27-50-10	FLAP MOTOR AND GEARBOX. . . . .
	27-50-20	FLAP SWITCH AND POSITION INDICATOR. . . . .
	27-50-30	FLAP POSITION TRANSMITTER,LIMIT & . . . . . SAFETY SWITCHES
	27-70	GUST LOCK & DAMPER
	27-70-01	LOCK ASSY,CONTROL SURFACE & THROTTLE. . . . .
28		FUEL
	28-00	GENERAL
	28-00-00	LIST OF PAGES & TABLE OF CONTENTS . . . . .
	28-10	STORAGE
	28-10-01	FUEL STORAGE AND INTERCONNECT . . . . .
	28-10-10	VENT SYSTEM,FUEL STORAGE. . . . .
	28-10-20	FUEL CAP AND ADAPTER. . . . .
	28-20	DISTRIBUTION
	28-20-01	FUEL DISTRIBUTION . . . . .
	28-20-50	FUEL SELECTOR VALVE . . . . .
	28-20-60	FUEL FILTER . . . . .
	28-25-10	FUEL SELECTOR PANEL . . . . .
30		ICE & RAIN PROTECTION
	30-00	GENERAL
	30-00-00	LIST OF PAGES & TABLE OF CONTENTS . . . . .
	30-10	AIRFOIL
	30-10-01	SURFACE DEICER. . . . . TC-1 THRU TC-1402 EXCEPT TC-350
	30-10-10	SURFACE DEICER/AUTOMATIC/ . . . . . TC-483 THRU TC-1402
	30-10-20	SURFACE DEICER/AUTOMATIC/ . . . . . TC-502 THRU TC-1607 TE-1 THRU TE-451 AND TC-350
	30-10-30	SURFACE DEICER. . . . . TE-452 THRU TE-942 EXCEPT TE-938
	30-30	PITOT & STATIC
	30-30-01	HEATED PITOT. . . . .
	30-40	WINDOWS, WINDSHIELDS & DOORS
	30-40-01	WINDSHIELD ANTI-ICE . . . . .
	30-40-10	WINDSHIELD DEFROST. . . . .
	30-60	PROPELLERS/ROTORS
	30-60-01	PROPELLER ALCOHOL ANTI-ICE. . . . .
	30-60-10	PROPELLER ELECTRIC ANTI-ICE/2 BLADE/. . . . . TC-350,TC-715,TC-874 THRU TC-1451 TE-1 THRU TE-863

ATA-100 SYSTEM - CHAPTER INDEX GUIDE

CHAPTER	SUB-SECTION	TITLE
30		ICE & RAIN PROTECTION (CONT)
	30-60	PROPELLERS/ROTORS (CONT)
	30-62-01	ELECTROTHERMAL PROPELLER DEICER . . . . . TC-1452 THRU TC-1607
	30-64-01	ELECTROTHERMAL PROPELLER DEICER . . . . . TE-864 THRU TE-942 EXCEPT TE-938
31		INSTRUMENTS
	31-00	GENERAL
	31-00-00	LIST OF PAGES & TABLE OF CONTENTS . . . . .
	31-30	RECORDERS
	31-30-01	FLIGHT AND ENGINE HOUR METERS . . . . .
32		LANDING GEAR
	32-00	GENERAL
	32-00-00	LIST OF PAGES & TABLE OF CONTENTS . . . . .
	32-10	MAIN GEAR & DOORS
	32-10-01	MAIN LANDING GEAR INSTALLATION. . . . .
	32-10-10	MAIN LANDING GEAR ASSEMBLY. . . . . TC-1 THRU TC-354 EXCEPT TC-251 & TC-344
	32-10-20	MAIN LANDING GEAR ASSEMBLY. . . . . TC-251,TC-344,TC-355 THRU TC-1607 TE-1 THRU TE-942 EXCEPT TE-938
	32-10-30	DOOR INSTALLATION,MAIN LANDING GEAR . . . . .
	32-20	NOSE GEAR & DOORS
	32-20-01	NOSE LANDING GEAR INSTALLATION. . . . .
	32-20-05	NOSE LANDING GEAR ASSEMBLY. . . . . TC-1 THRU TC-1392,TC-1397 THRU TC-1401 TC-1403 THRU TC-1607;TE-1 THRU TE-300
	32-20-10	NOSE LANDING GEAR ASSY. . . . . TC-1 THRU TC-1607,TE-1 THRU TE-300
	32-20-20	NOSE LANDING GEAR ASSY. . . . . TE-301 THRU TE-942 EXCEPT TE-938
	32-20-30	NOSE LANDING GEAR DOOR ASSY . . . . .
	32-30	EXTENSION AND RETRACTION
	32-30-01	MAIN LANDING GEAR RETRACT MECHANISM . . . . .
	32-30-10	NOSE LANDING GEAR RETRACT MECHANISM . . . . .
	32-30-20	LANDING GEAR RETRACT MOTOR AND GEARBOX. . . . .
	32-30-30	LANDING GEAR RETRACT MOTOR. . . . .
	32-40	WHEELS & BRAKES
	32-40-01	MAIN GEAR WHEEL . . . . . TC-1 THRU TC-1288
	32-40-02	MAIN WHEEL ASSY . . . . . TC-1289 THRU TC-1607 TE-1 THRU TE-942 EXCEPT TE-938
	32-40-10	NOSE GEAR WHEEL . . . . .
	32-40-20	BRAKE ASSY. . . . . TC-1 THRU TC-422
	32-40-21	BRAKE ASSY. . . . . TC-423 THRU TC-1288
	32-40-22	BRAKE ASSY. . . . . TC-1289 THRU TC-1607 TE-1 THRU TE-942 EXCEPT TE-938
	32-40-30	BRAKE PLUMBING. . . . . TC-1 THRU TC-1221

ATA-100 SYSTEM - CHAPTER INDEX GUIDE

CHAPTER	SUB-SECTION	TITLE
32		LANDING GEAR (CONT)
	32-40	WHEELS & BRAKES (CONT) TE-1 THRU TE-694
	32-40-31	BRAKE PLUMBING. . . . . TC-1222 THRU TC-1607 TE-695 THRU TE-942 EXCEPT TE-938
	32-40-40	BRAKE MASTER CYLINDER . . . . . TC-1 THRU TC-998
	32-40-41	BRAKE MASTER CYLINDER . . . . . TC-999 THRU TC-1607 TE-1 THRU TE-942 EXCEPT TE-938
	32-40-50	BRAKE SHUTTLE VALVE . . . . .
	32-40-60	PARKING BRAKE VALVE . . . . . TC-1 THRU TC-1221,TE-1 THRU TE-694
	32-40-61	PARKING BRAKE VALVE . . . . . TC-1222 THRU TC-1607 TE-695 THRU TE-942 EXCEPT TE-938
	32-50	STEERING
	32-50-01	NOSE WHEEL STEERING INSTALLATION. . . . .
	32-50-10	NOSE SHIMMY DAMPER. . . . .
	32-60	POSITION AND WARNING
	32-60-01	LANDING GEAR POSITION,SAFETY AND WARNING. . . . . TC-350,TC-1024 THRU TC-1607 TE-252 THRU TE-942 EXCEPT TE-938
33		LIGHTS
	33-00	GENERAL
	33-00-00	LIST OF PAGES & TABLE OF CONTENTS . . . . .
	33-10	FLIGHT COMPARTMENT
	33-10-01	OPTIONAL INSTRUMENT PANEL LIGHTS. . . . .
	33-11-10	CABIN DOOR COURTESY LIGHT & INTERIOR LAMPS. . . . . TC-1043 THRU TC-1607 TE-452 THRU TE-942 EXCEPT TE-938
	33-30	CARGO & SERVICE DEPARTMENTS
	33-30-01	NOSE BAGGAGE COMPARTMENT LIGHTS . . . . . TE-452 THRU TE-942 EXCEPT TE-938
	33-40	EXTERIOR
	33-40-01	NOSE GEAR TAXI AND LANDING LIGHT. . . . . TC-1 THRU TC-1607,TE-1 THRU TE-300
	33-40-02	NOSE CONE TAXI LIGHT/REFERENCE/ . . . . .
	33-40-03	NOSE GEAR TAXI LIGHT. . . . . TE-301 THRU TE-767
	33-40-05	NOSE GEAR TAXI LIGHT. . . . . TE-768 THRU TE-834
	33-40-07	NOSE GEAR TAXI LIGHT. . . . . TE-835 THRU TE-937,TE-939 THRU TE-942
	33-40-08	WING NAVIGATION LIGHTS. . . . . TC-1 THRU TC-1607,TE-1 THRU TE-767
	33-40-09	WING LANDING LIGHT/REFERENCE/ . . . . .
	33-44-01	LOWER STROBE LIGHT. . . . . TC-1261 THRU TC-1607 AND TE-730 THRU TE-862
	33-44-10	STROBE LIGHTS . . . . . TC-1299 THRU TC-1607 TE-768 THRU TE-942 EXCEPT TE-938
	33-45-01	UPPER ROTATING BEACON . . . . .
	33-46-01	LOWER ROTATING BEACON . . . . . TC-1403 THRU TC-1607

ATA-100 SYSTEM - CHAPTER INDEX GUIDE

CHAPTER	SUB-SECTION	TITLE
33		LIGHTS (CONT)
	33-40	EXTERIOR (CONT)
		TE-1 THRU TE-767
	33-47-01	UPPER OSCILLATING BEACON. . . . .
		TE-768 THRU TE-942 EXCEPT TE-938
	33-48-01	WING ICE LIGHT. . . . .
		TC-191 THRU TC-1607
		TE-1 THRU TE-942 EXCEPT TE-938
	33-49-01	LOWER OSCILLATING BEACON. . . . .
		TE-768 THRU TE-942 EXCEPT TE-938
34		NAVIGATION, PITOT/STATIC
	34-00	GENERAL
	34-00-00	LIST OF PAGES & TABLE OF CONTENTS . . . . .
	34-10	FLIGHT ENVIRONMENT DATA
	34-10-01	PITOT AND STATIC SYSTEM . . . . .
		TC-1 THRU TC-1607
		TE-1 THRU TE-451
	34-10-10	PITOT AND STATIC SYSTEM . . . . .
		TE-452 THRU TE-942 EXCEPT TE-938
	34-10-20	FLIGHT DATA INSTRUMENTS . . . . .
35		OXYGEN
	35-00	GENERAL
	35-00-00	LIST OF PAGES & TABLE OF CONTENTS . . . . .
	35-00-01	OXYGEN STORAGE/NOSE BAGGAGE/. . . . .
	35-00-05	OXYGEN STORAGE/AFT BAGGAGE/ . . . . .
	35-00-20	OXYGEN SYSTEM INSTALLATION. . . . .
		TC-1 THRU TC-357
	35-00-21	OXYGEN SYSTEM INSTALLATION. . . . .
		TC-358 THRU TC-954
	35-00-22	OXYGEN SYSTEM INSTALLATION. . . . .
		TC-358 THRU TC-1029,TE-1 THRU TE-344
	35-00-23	OXYGEN SYSTEM INSTALLATION. . . . .
		TC-1030 THRU TE-1607,TE-345 THRU TE-767
	35-00-24	OXYGEN SYSTEM INSTALLATION. . . . .
		TE-768 THRU TE-942 EXCEPT TE-938
36		PNEUMATIC
	36-00	GENERAL
	36-00-00	LIST OF PAGES & TABLE OF CONTENTS . . . . .
	36-10	DISTRIBUTION
	36-10-01	PRESSURE SYSTEM . . . . .
		TE-452 THRU TE-942 EXCEPT TE-938
	36-10-10	FUSELAGE INSTRUMENT AND PRESSURE PLUMBING . . . . .
		TE-452 THRU TE-767
	36-20	INDICATING
	36-20-01	PRESSURE INDICATING/REFERENCE/. . . . .
37		VACUUM
	37-00	GENERAL
	37-00-00	LIST OF PAGES & TABLE OF CONTENTS . . . . .

ATA-100 SYSTEM - CHAPTER INDEX GUIDE

CHAPTER	SUB-SECTION	TITLE
37		VACUUM (CONT)
	37-10	DISTRIBUTION
	37-10-01	VACUUM SYSTEM/REFERENCE/. . . . .
	37-20	INDICATING
	37-20-01	VACUUM INDICATING/REFERENCE/. . . . .
39		ELECTRIC PANELS, PARTS & INST.
	39-00	GENERAL
	39-00-00	LIST OF PAGES & TABLE OF CONTENTS . . . . .
	39-10	INSTRUMENT & CONTROL PANELS
	39-10-01	FIXED INSTRUMENT PANEL. . . . . TC-191 THRU TC-1607,TE-1 THRU TE-451
	39-10-10	FIXED INSTRUMENT PANEL. . . . . TE-452 THRU TE-767
	39-10-20	FIXED INSTRUMENT PANEL. . . . . TE-768 THRU TE-942 EXCEPT TE-938
	39-10-30	INSTRUMENT PANEL. . . . . TC-1 THRU TC-190
	39-14-01	FLOATING INSTRUMENT PANEL . . . . . TC-1 THRU TC-190
	39-14-10	FLOATING INSTRUMENT PANEL . . . . . TC-191 THRU TC-1607,TE-1 THRU TE-451
	39-14-20	FLOATING INSTRUMENT PANEL . . . . . TE-452 THRU TE-767
	39-14-30	FLOATING INSTRUMENT PANEL . . . . . TE-768 THRU TE-942 EXCEPT TE-938
	39-14-40	INSTRUMENT SUBPANEL . . . . . TC-191 THRU TC-1607,TE-1 THRU TE-451
	39-14-50	INSTRUMENT SUBPANEL . . . . . TE-452 THRU TE-767
	39-14-60	INSTRUMENT SUBPANEL . . . . . TE-768 THRU TE-942 EXCEPT TE-938
	39-14-70	IGNITION PANEL AND OUTSIDE AIR TEMPERATURE. . . . . INDICATOR TC-1 THRU TC-190
	39-14-80	IGNITION PANEL AND. . . . . OUTSIDE AIR TEMPERATURE INDICATOR TC-191 THRU TC-1607, TE-1 THRU TE-942 EXCEPT TE-938
	39-17-01	INSTRUMENT PANEL PLUMBING . . . . . TC-1 THRU TC-190
	39-17-10	INSTRUMENT PANEL PLUMBING . . . . . TC-191 THRU TC-1607,TE-1 THRU TE-451
	39-17-20	INSTRUMENT PANEL PLUMBING . . . . . TE-452 THRU TE-767
	39-17-30	INSTRUMENT PANEL PLUMBING . . . . . TE-768 THRU TE-942 EXCEPT TE-938
STRUCTURE		
52		DOORS
	52-00	GENERAL
	52-00-00	LIST OF PAGES & TABLE OF CONTENTS . . . . .
	52-10	PASSENGER/CREW
	52-10-01	CABIN DOOR INSTALLATION . . . . . TC-1 THRU TC-1142,TE-1 THRU TE-767

ATA-100 SYSTEM - CHAPTER INDEX GUIDE

CHAPTER	SUB-SECTION	TITLE
52		DOORS (CONT)
	52-10	PASSENGER/CREW (CONT)
	52-10-02	CABIN DOOR INSTALLATION . . . . .
		TC-1143 THRU TC-1607,TE-768 THRU TE-942
		EXCEPT TE-938
	52-20	EMERGENCY EXIT
	52-20-01	EMERGENCY EXIT. . . . .
	52-30	CARGO
	52-30-01	CABIN BAGGAGE DOOR. . . . .
	52-32-01	UTILITY BAGGAGE DOOR. . . . .
	52-35-01	NOSE BAGGAGE DOOR . . . . .
		TC-1 THRU TC-1607;TE-1 THRU TE-451
	52-35-02	NOSE BAGGAGE DOOR . . . . .
		TE-452 THRU TE-942 EXCEPT TE-938
	52-60	ENTRANCE STAIRS
	52-60-01	ASSIST STEP . . . . .
53		FUSELAGE
	53-00	GENERAL
	53-00-00	LIST OF PAGES & TABLE OF CONTENTS . . . . .
	53-10	MAIN FRAME
	53-10-01	NOSE STRUCTURE. . . . .
		TC-1 THRU TC-1607
	53-11-01	NOSE STRUCTURE. . . . .
		TE-1 THRU TE-942 EXCEPT TE-938
	53-12-01	KEEL ASSEMBLY . . . . .
	53-13-01	FIREWALL ASSY . . . . .
	53-14-01	CABIN SIDE STRUCTURE. . . . .
		TC-1 THRU TC-1607 EXCEPT TC-350
	53-14-50	CABIN SIDE STRUCTURE. . . . .
		TC-350 & TE-1 THRU TE-942 EXCEPT TE-938
	53-15-01	CABIN BOTTOM PANEL. . . . .
	53-16-50	CABIN CANOPY. . . . .
		TC-1 THRU TC-1402 EXCEPT TC-350
	53-16-51	CANOPY SECTION. . . . .
		TC-350 & TC-1403 THRU TC-1607
		TE-1 THRU TE 942 EXCEPT TE-938
	53-17-01	FRONT SPAR CARRY THRU STRUCTURE . . . . .
		TC-1 THRU TC-1525 EXCEPT TC-1471
		TE-1 THRU TE-896
	53-17-02	FRONT SPAR CARRY THRU . . . . .
		TC-1471,TC-1526 THRU TC-1607
		TE-897 THRU TE-942 EXCEPT TE-938
	53-17-50	REAR SPAR CARRY THRU STRUCTURE. . . . .
		TC-1 THRU TC-1525 EXCEPT TC-1471
		TE-1 THRU TE-896
	53-17-52	REAR SPAR CARRY THRU. . . . .
		TC-1471,TC-1526 THRU TC-1607
		TE-897 THRU TE-942 EXCEPT TE-938
	53-18-01	AFT FUSELAGE STRUCTURE. . . . .
	53-20	AUXILIARY STRUCTURE
	53-20-01	FLOORBOARD INSTALLATION . . . . .
	53-25-01	PEDESTAL STRUCTURE. . . . .
	53-30	PLATES/SKIN
	53-30-01	FUSELAGE SKINS. . . . .
		TC-1 THRU TC-1607 EXCEPT TC-350

ATA-100 SYSTEM - CHAPTER INDEX GUIDE

CHAPTER	SUB-SECTION	TITLE
53		FUSELAGE (CONT)
	53-30	PLATES/SKIN (CONT)
	53-32-01	FUSELAGE SKINS. . . . . TC-350,TE-1 THRU TE-942 EXCEPT TE-938
	53-50	AERODYNAMIC FAIRINGS
	53-50-01	NOSE CONE . . . . . TC-1 THRU TC-501
	53-50-10	NOSE CONE . . . . . TC-502 THRU TC-1607 TE-1 THRU TE-942 EXCEPT TE-938
	53-50-20	NOSE CONE . . . . . USED ONLY ON RADAR EQUIPPED AIRCRAFT TC-797 THRU TC-1607 TC-350,TE-1 THRU TE-942 EXCEPT TE-938
	53-51-01	TAIL CONE . . . . .
	53-52-01	DORSAL FAIRING. . . . . TC-1 THRU TC-954 EXCEPT TC-350
	53-52-02	DORSAL FAIRING. . . . . TC-350,TC-955 THRU TC-1091 TE-1 THRU TE-558
	53-52-03	DORSAL FAIRING. . . . . TC-1092 THRU TC-1607 AND TE-559 THRU TE-942 EXCEPT TE-938
54		NACELLES
	54-00	GENERAL
	54-00-00	LIST OF PAGES & TABLE OF CONTENTS . . . . .
	54-10	MAIN FRAME
	54-10-01	NACELLE STRUCTURE . . . . .
	54-30	PLATES/SKIN
	54-30-01	NACELLE SKINS . . . . .
	54-50	FILLETS/FAIRINGS
	54-50-01	NACELLE FAIRINGS AND FILLETS. . . . .
55		STABILIZERS
	55-00	GENERAL
	55-00-00	LIST OF PAGES & TABLE OF CONTENTS . . . . .
	55-00-01	EMPENNAGE INSTALLATION. . . . . TC-1 THRU TC-1607
	55-00-02	EMPENNAGE INSTALLATION. . . . . TE-1 THRU TE-942 EXCEPT TE-938
	55-10	HORIZONTAL STABILIZERS
	55-10-01	HORIZONTAL STABILIZER . . . . . TC-1 THRU TC-1607
	55-11-01	HORIZONTAL STABILIZER . . . . . TE-1 THRU TE-942 EXCEPT TE-938
	55-20	ELEVATOR/ELEVON
	55-20-01	ELEVATOR AND TAB. . . . . TC-1 THRU TC-1607
	55-21-01	ELEVATOR AND TAB. . . . . TE-1 THRU TE-942 EXCEPT TE-938
	55-30	VERTICAL STABILIZER
	55-30-01	VERTICAL STABILIZER . . . . .

ATA-100 SYSTEM - CHAPTER INDEX GUIDE

CHAPTER	SUB-SECTION	TITLE
55		STABILIZERS (CONT)
	55-40	RUDDER
	55-40-01	RUDDER AND TAB ASSEMBLY . . . . .
56		WINDOWS
	56-00	GENERAL
	56-00-00	LIST OF PAGES & TABLE OF CONTENTS . . . . .
	56-10	FLIGHT COMPARTMENT
	56-10-01	WINDSHIELD AND WINDOWS. . . . . TC-1 THRU TC-1042,TE-1 THRU TE-451
	56-10-10	WINDSHIELD AND WINDOWS. . . . . TC-1043 THRU TC-1607 TE-452 THRU TE-942 EXCEPT TE-938
	56-20	CABIN
	56-20-01	WINDOW INSTALLATION AFT . . . . .
	56-30	DOOR
	56-30-01	CABIN DOOR WINDOW/REFERENCE/. . . . .
57		WINGS
	57-00	GENERAL
	57-00-00	LIST OF PAGES & TABLE OF CONTENTS . . . . .
	57-10	MAIN FRAME
	57-10-01	WING ASSEMBLY/COMPLETE/ . . . . .
	57-10-10	WING SECTION ASSY . . . . .
	57-10-20	WING FRONT SPAR . . . . . TC-1 THRU TC-1442 TE-1 THRU TE-862
	57-10-21	WING FRONT SPAR . . . . . TC-1443 THRU TC-1607 TE-863 THRU TE-942 EXCEPT TE-938
	57-10-30	WING REAR SPAR. . . . .
	57-20	AUXILIARY STRUCTURE
	57-20-01	LEADING EDGE AND FRONT SPAR ASSEMBLY. . . . .
	57-20-05	WING INBOARD LEADING EDGE . . . . . TC-1 THRU TC-399
	57-20-06	WING INBOARD LEADING EDGE . . . . . TC-400 THRU TC-1607 TE-1 THRU TE-942 EXCEPT TE-938
	57-20-10	WING OUTBOARD LEADING EDGE/WITH FUEL/ . . . . . TC-1 THRU TC-399
	57-20-12	WING OUTBOARD LEADING EDGE. . . . . TC-400 THRU TC-1607 TE-1 THRU TE-942 EXCEPT TE-938
	57-20-15	REAR SPAR AND TRAILING EDGE . . . . .
	57-20-20	WING TIP. . . . . TC-1 THRU TC-399
	57-20-21	WING TIP. . . . . TC-400 THRU TC-1600 TE-1 THRU TE-767
	57-20-22	WING TIP. . . . . TE-768 THRU TE-942 EXCEPT TE-938
	57-20-23	WING TIP,EXTENDED . . . . . TC-1601 THRU TC-1607
	57-30	PLATES/SKIN
	57-30-01	WING SKINS. . . . .

ATA-100 SYSTEM - CHAPTER INDEX GUIDE

CHAPTER	SUB-SECTION	TITLE
57		WINGS (CONT)
	57-40	ATTACH FITTINGS
	57-40-01	WING INSTALLATION . . . . .
	57-50	FLIGHT SURFACES
	57-50-01	FLAP ASSEMBLY . . . . .
	57-50-10	AILERON ASSEMBLY. . . . .
PROPELLER/ROTOR		
61		PROPELLERS
	61-00	GENERAL
	61-00-00	LIST OF PAGES & TABLE OF CONTENTS . . . . .
	61-10	PROPELLER ASSEMBLY
	61-10-01	2 BLADE MCCAULEY PROPELLER ASSEMBLY . . . . . TC-1 THRU TC-472 EXCEPT TC-371 AND TC-408
	61-10-02	2 BLADE MCCAULEY PROPELLER ASSEMBLY . . . . . TC-371,TC-408,TC-473 THRU TC-1415
	61-10-03	2 BLADE HARTZELL PROPELLER ASSEMBLY . . . . . TC-1416 THRU TC-1607
	61-10-04	3 BLADE HARTZELL PROPELLER ASSEMBLY . . . . . TC-502 THRU TC-1418
	61-10-05	3 BLADE HARTZELL PROPELLER ASSEMBLY . . . . . TC-1419 THRU TC-1607
	61-12-01	2 BLADE MCCAULEY PROPELLER. . . . . TE-1 THRU TE-848
	61-12-02	2 BLADE HARTZELL PROPELLER. . . . . TE-849 THRU TE-942 EXCEPT TE-938
	61-12-03	3 BLADE MCCAULEY PROPELLER. . . . . TE-1 THRU TE-860
	61-12-04	3 BLADE HARTZELL PROPELLER. . . . . TE-849 THRU TE-942 EXCEPT TE-938
	61-20	CONTROLLING
	61-20-01	PROPELLER GOVERNOR. . . . . TC-1 THRU TC-936 EXCEPT TC-663
	61-20-02	PROPELLER GOVERNOR. . . . . TC-663,TC-937 THRU TC-1398 AND TC-1402
	61-20-03	PROPELLER GOVERNOR. . . . . TC-1399 THRU TC-1607 EXCEPT TC-1402
	61-22-01	PROPELLER GOVERNOR. . . . . TE-1 THRU TE-851
	61-22-02	PROPELLER GOVERNOR. . . . . TE-852 THRU TE-942 EXCEPT TE-938
	61-24-01	PROPELLER ACCUMULATOR . . . . .
POWER PLANT		
71		POWER PLANT
	71-00	GENERAL
	71-00-00	LIST OF PAGES & TABLE OF CONTENTS . . . . .
	71-00-01	POWER PLANT INSTALLATION. . . . . TC-1 THRU TC-501
	71-00-02	POWER PLANT INSTALLATION. . . . . TC-502 THRU TC-1254
	71-00-03	POWER PLANT INSTALLATION. . . . . TC-1255 THRU TC-1607

ATA-100 SYSTEM - CHAPTER INDEX GUIDE

CHAPTER	SUB-SECTION	TITLE
71		POWER PLANT (CONT)
	71-00	GENERAL (CONT)
	71-02-01	POWER PLANT . . . . .
		TE-1 THRU TE-849
	71-02-02	POWER PLANT . . . . .
		TE-850 THRU TE-942,EXCEPT TE-938
	71-10	COWLING
	71-10-01	ENGINE COWLING. . . . .
		TC-1 THRU TC-1607
	71-12-01	ENGINE COWLING. . . . .
		TE-1 THRU TE-942,EXCEPT TE-938
	71-60	AIR INTAKES
	71-60-01	ENGINE BAFFLES. . . . .
		TC-1 THRU TC-1607
	71-62-01	ENGINE BAFFLES. . . . .
		TE-1 THRU TE-942,EXCEPT TE-938
	71-64-01	INDUCTION AIR SYSTEM. . . . .
		TC-1 THRU TC-1607
	71-66-01	INDUCTION AIR SYSTEM. . . . .
		TE-1 THRU TE-942,EXCEPT TE-938
	71-70	ENGINE DRAINS
	71-70-01	ENGINE DRAINS . . . . .
		TC-1 THRU TC-1607
	71-72-01	ENGINE DRAINS . . . . .
		TE-1 THRU TE-942,EXCEPT TE-938
72		ENGINE
	72-00	GENERAL
	72-00-00	LIST OF PAGES & TABLE OF CONTENTS . . . . .
	72-00-01	ENGINE/REFERENCE/ . . . . .
73		ENGINE FUEL & CONTROL
	73-00	GENERAL
	73-00-00	LIST OF PAGES & TABLE OF CONTENTS . . . . .
	73-10	DISTRIBUTION
	73-10-01	ENGINE FUEL PLUMBING. . . . .
		TC-1 THRU TC-1607
	73-12-01	ENGINE FUEL PLUMBING. . . . .
		TE-1 THRU TE-942 EXCEPT TE-938
74		IGNITION
	74-00	GENERAL
	74-00-00	LIST OF PAGES & TABLE OF CONTENTS . . . . .
	74-10	ELECTRICAL POWER SUPPLY
	74-10-01	IGNITION PANEL/REFERENCE/ . . . . .
76		ENGINE CONTROLS
	76-00	GENERAL
	76-00-00	LIST OF PAGES & TABLE OF CONTENTS . . . . .
	76-10	POWER CONTROL
	76-10-01	ENGINE CONTROLS . . . . .
		TC-1 THRU TC-1607

ATA-100 SYSTEM - CHAPTER INDEX GUIDE

CHAPTER	SUB-SECTION	TITLE
76		ENGINE CONTROLS (CONT)
	76-10	POWER CONTROL (CONT)
	76-12-01	ENGINE CONTROLS . . . . . TE-1 THRU TE-942 EXCEPT TE-938
	76-15-01	CONSOLE ENGINE CONTROLS . . . . . TC-1 THRU TC-1607
	76-16-01	CONSOLE ENGINE CONTROLS AND THROTTLE WARNING. . . . . TE-1 THRU TE-942 EXCEPT TE-938
77		ENGINE INDICATING
	77-00	GENERAL
	77-00-00	LIST OF PAGES & TABLE OF CONTENTS . . . . .
	77-20	TEMPERATURE
	77-20-01	ENGINE TEMPERATURE INDICATING SYSTEM/REFERENCE/ . . .
78		EXHAUST
	78-00	GENERAL
	78-00-00	LIST OF PAGES & TABLE OF CONTENTS . . . . .
	78-10	COLLECTOR/NOZZLE
	78-10-01	EXHAUST SYSTEM. . . . . TC-1 THRU TC-1607
	78-12-01	ENGINE EXHAUST SYSTEM . . . . . TE-1 THRU TE-937,TE-939 THRU TE-942
	78-13-01	ENGINE EXHAUST SYSTEM . . . . .
79		OIL
	79-00	GENERAL
	79-00-00	LIST OF PAGES & TABLE OF CONTENTS . . . . .
	79-00-01	ENGINE OIL SYSTEM/REFERENCE/. . . . .
80		STARTING
	80-00	GENERAL
	80-00-00	LIST OF PAGES & TABLE OF CONTENTS . . . . .
	80-10	CRANKING
	80-10-01	STARTER . . . . .

ALPHABETICAL INDEX

ALPHABETICAL INDEX

COMPONENT ITEM OR SYSTEM NAME	CHAPTER NAME	CHAP/SUB-SECT & UNIT
A		
ACCESS DOOR,FLOORBOARD	FUSELAGE	53-20-01
ACCESS DOOR,HORIZONTAL STABILIZER	STABILIZERS	55-10-01
ACCESS DOORS,WING	WINGS	57-10-01
ACCUMULATOR,PROPELLER GOVERNOR	PROPELLERS	61-24-01
ACTUATOR ASSY,AILERON	FLIGHT CONTROLS	27-10-10
ACTUATOR ASSY,AILERON TAB	FLIGHT CONTROLS	27-10-01
ACTUATOR ASSY,ELECTRIC ELEVATOR TRIM	FLIGHT CONTROLS	27-30-30
ACTUATOR ASSY,ELEVATOR TAB	FLIGHT CONTROLS	27-30-11
ACTUATOR ASSY,FLAP	FLIGHT CONTROLS	27-50-10
ACTUATOR ASSY,LDG DOWN LIMIT SWITCH	LANDING GEAR	32-30-01
ACTUATOR ASSY,MAIN LANDING GEAR RETRACT	LANDING GEAR	32-30-20
ACTUATOR ASSY,RUDDER TRIM TAB	FLIGHT CONTROLS	27-20-10
ACTUATOR,LDG UP SWITCH	LANDING GEAR	30-30-01
ADAPTER ASSY,FUEL	FUEL	28-10-20
AFT FUSELAGE STRUCTURE	FUSELAGE	53-18-01
AILERON & AILERON TAB CONTROLS	FLIGHT CONTROLS	27-10-01
AILERON ASSEMBLY	WINGS	57-50-10
AILERON BELLCRANK ASSY	FLIGHT CONTROLS	27-10-01
AILERON CONTROL CABLES	FLIGHT CONTROLS	27-10-01
AILERON TAB ACTUATOR ASSY	FLIGHT CONTROLS	27-10-01
AILERON TAB ASSY	WINGS	57-50-10
AILERON TRIM TAB CONTROLS,CONSOLE	FLIGHT CONTROLS	27-10-30
AIR DUCT,CABIN HEATER	AIR CONDITIONING	21-20-01
AIR TEMPERATURE GAGE	ELEC PANELS,PARTS & INST	39-14-70
ALCOHOL,ANTI-ICE TANK	ICE AND RAIN PROTECTION	30-40-01
ALTERNATE AIR	POWER PLANT	71-66-01
ALTERNATE AIR BOX	POWER PLANT	71-66-01
ALTERNATOR	ELECTRICAL POWER	24-30-01
ALTERNATOR DRIVE BELT	POWER PLANT	71-00-01
ALTERNATOR ON SWITCH	ELECTRICAL POWER	24-00-01
ALTERNATOR PULLEY	POWER PLANT	71-00-01
ALTIMETER	ELEC PANELS,PARTS & INST	39-10-10
ALTIMETER	NAVIGATION & PITOT STATIC	34-10-20
AMMETER	ELEC PANELS,PARTS & INST	39-10-10
ANTI-ICE KIT,ELECTRIC	ICE AND RAIN PROTECTION	30-60-10
ARM ASSY,CONTROL	FLIGHT CONTROLS	27-10-20
ARM ASSY,NOSE STEERING	FLIGHT CONTROLS	27-20-20
ARMREST ASSY/FIFTH & SIXTH SEATS/	EQUIPMENT/FURNISHINGS	25-23-01
ARMREST ASSY,FRONT CENTER	EQUIPMENT/FURNISHINGS	25-23-01
ARMREST ASSY,REAR SEATS	EQUIPMENT/FURNISHINGS	25-23-01
ARMREST ASSY,STOWABLE	EQUIPMENT/FURNISHINGS	25-23-01
ASH TRAY	EQUIPMENT/FURNISHINGS	25-23-01
ASSIST STEP	DOORS	52-60-01
B		
BAFFLE ASSY,ENGINE INTERCYLINDER	POWER PLANT	71-60-01
BAFFLES,ENGINE	POWER PLANT	71-60-01
BAGGAGE DOOR,CABIN	DOORS	52-30-01
BAGGAGE DOORS UPHOLSTERY	EQUIPMENT/FURNISHINGS	25-22-01
BATTERY	ELECTRICAL POWER	24-00-01
BATTERY BOX ASSY	ELECTRICAL POWER	24-30-20
BATTERY BOX LID	FUSELAGE	53-10-01
BATTERY INSTALLATION	ELECTRICAL POWER	24-30-20
BEACON LIGHT,OSCILLATING	LIGHTS	33-47-01
BEACON LIGHT,ROTATING	LIGHTS	33-45-01
BELLCRANK & CABLE ASSY,AILERON	FLIGHT CONTROLS	27-10-01
BELLCRANK ASSY,ELEVATOR	FLIGHT CONTROLS	27-30-01
BELLCRANK ASSY,RUDDER	FLIGHT CONTROLS	27-20-01
BELLCRANK,IRIS VALVE CONTROL	AIR CONDITIONING	21-40-01
BELT,ALTERNATOR DRIVE	POWER PLANT	71-00-01
BELT,GENERATOR DRIVE	POWER PLANT	71-00-01
BLOWER ASSY,FWD CIRCULATING/HEATER/	AIR CONDITIONING	21-40-01
BLOWER ASSY,HEATER	AIR CONDITIONING	21-40-60
BOLTS,WING ATTACH	WINGS	57-40-01

ALPHABETICAL INDEX

COMPONENT ITEM OR SYSTEM NAME	CHAPTER NAME	CHAP/SUB-SECT & UNIT
B		
BOOT,LANDING GEAR RETRACT ROD	LANDING GEAR	32-30-01
BOOT,NOSE GEAR STEERING	LANDING GEAR	32-50-01
BOOT,NOSE RETRACT ROD	LANDING GEAR	32-30-10
BOOT,UP LOCK ASSY	LANDING GEAR	32-30-01
BOOTS,SURFACE DEICER	ICE AND RAIN PROTECTION	30-10-01
BOTTLE,OXYGEN	OXYGEN	35-00-05
BOX ASSY,ALTERNATE AIR	POWER PLANT	71-66-01
BOX ASSY,BATTERY	ELECTRICAL POWER	24-30-20
BOX ASSY,EXTERNAL POWER RECEPTACLE	ELECTRICAL POWER	24-40-01
BOX ASSY,GLOVE	ELEC PANELS,PARTS & INST	39-10-01
BOX ASSY,INDUCTION AIR	POWER PLANT	71-64-01
BOX ASSY,INDUCTION AIR	POWER PLANT	71-00-01
BOX ASSY,OXYGEN MASK STORAGE	OXYGEN	35-00-21
BRACE ASSY,MAIN LANDING GEAR RETRACT	LANDING GEAR	32-30-01
BRACE ASSY,NOSE LANDING GEAR RETRACT	LANDING GEAR	32-30-10
BRAKE ASSY	LANDING GEAR	32-40-20
BRAKE ASSY,MAIN LANDING GEAR	LANDING GEAR	32-40-20
BRAKE MASTER CYLINDER	LANDING GEAR	32-40-40
BRAKE PEDAL	FLIGHT CONTROLS	27-20-20
BRAKE PLUMBING	LANDING GEAR	32-40-30
BRAKE SHUTTLE VALVE	LANDING GEAR	32-40-50
BUTTON,STATIC AIR	NAVIGATION & PITOT STATIC	34-10-01
C		
CABIN BAGGAGE DOOR	DOORS	52-30-01
CABIN BOTTOM PANEL	FUSELAGE	53-15-01
CABIN CANOPY	FUSELAGE	53-16-50
CABIN DOOR COURTESY LT & INTERIOR LAMPS	LIGHTS	33-11-10
CABIN DOOR INSTALLATION	DOORS	52-10-01
CABIN DOOR WINDOW INSTALLATION	WINDOWS	56-30-01
CABIN FURNISHING/MISCELLANEOUS/	EQUIPMENT/FURNISHINGS	25-23-01
CABIN HEATER	AIR CONDITIONING	21-40-01
CABIN SECTION,LOWER	FUSELAGE	53-14-01
CABIN SIDE STRUCTURE	FUSELAGE	53-14-01
CABIN UPHOLSTERY	EQUIPMENT/FURNISHINGS	25-22-01
CABLE ASSY,DEFROST CONTROL	ICE AND RAIN PROTECTION	30-40-10
CABLE ASSY,DEICER DISTRIBUTOR VALVE	ICE AND RAIN PROTECTION	30-10-01
CABLE ASSY,DEICER RESERVOIR ASSY	ICE AND RAIN PROTECTION	30-10-01
CABLE ASSY,MAIN GEAR UPLOCK	LANDING GEAR	32-30-01
CABLE,AILERON CONTROL	FLIGHT CONTROLS	27-10-01
CABLE,AILERON TAB CONTROL	FLIGHT CONTROLS	27-10-01
CABLE,ELECTRIC TRIM TAB	FLIGHT CONTROLS	27-30-30
CABLE,ELEVATOR CONTROL	FLIGHT CONTROLS	27-30-01
CABLE,ELEVATOR TAB CONTROL	FLIGHT CONTROLS	27-30-01
CABLE,RUDDER CONTROL	FLIGHT CONTROLS	27-20-01
CABLE,RUDDER TAB CONTROL	FLIGHT CONTROLS	27-20-10
CAM ASSY,HEATER SWITCH CONTROL	AIR CONDITIONING	21-40-01
CAP ASSY,FUEL	FUEL	28-10-20
CARPETS	EQUIPMENT/FURNISHINGS	25-28-01
CIGARETTE LIGHTER	EQUIPMENT/FURNISHINGS	25-23-01
CIRCUIT BOARD,FUEL QUANTITY	ELEC PANELS,PARTS & INST	39-10-01
CLOCK ASSY,CONTROL WHEEL	FLIGHT CONTROLS	27-10-20
CLOCK,EIGHT DAY	ELEC PANELS,PARTS & INST	39-10-30
COAT HANGER STRAP	EQUIPMENT/FURNISHINGS	25-22-01
CONE,NOSE	FUSELAGE	53-50-01
CONE,TAIL	FUSELAGE	53-51-01
CONSOLE AILERON TAB CONTROL	FLIGHT CONTROLS	27-10-30
CONSOLE ASSY,OXYGEN	OXYGEN	35-00-22
CONSOLE ENGINE CONTROLS	ENGINE CONTROLS	76-15-01
CONSOLE RUDDER TAB CONTROLS	FLIGHT CONTROLS	27-20-15
CONSOLE THROTTLE WARNING	ENGINE CONTROLS	76-15-01
CONTROL ARM AND CONTROL COLUMN	FLIGHT CONTROLS	27-10-20
CONTROL ASSY,ELEVATOR	FLIGHT CONTROLS	27-30-20
CONTROL ASSY,ELEVATOR TAB	FLIGHT CONTROLS	27-30-20

ALPHABETICAL INDEX

COMPONENT ITEM OR SYSTEM NAME	CHAPTER NAME	CHAP/SUB-SECT & UNIT
C		
CONTROL ASSY,FRESH AIR	AIR CONDITIONING	21-22-01
CONTROL ASSY,HEATER	AIR CONDITIONING	21-20-01
CONTROL ASSY,INDUCTION AIR	ENGINE CONTROLS	76-12-01
CONTROL PEDESTAL	FUSELAGE	53-25-01
CONTROL WHEEL ASSY	FLIGHT CONTROLS	27-10-20
CONTROL,FUEL SELECTOR VALVE	FUEL	28-25-10
CONTROL,HEATER IRIS VALVE	AIR CONDITIONING	21-40-01
CONTROL,PARKING BRAKE	ELEC PANELS,PARTS & INST	39-10-30
CONTROLS,ELEVATOR & ELEVATOR TAB	FLIGHT CONTROLS	27-30-01
CONTROLS,ENGINE	ENGINE CONTROLS	76-10-01
CONTROLS,MIXTURE	ENGINE CONTROLS	76-10-01
CONTROLS,PROPELLER	ENGINE CONTROLS	76-10-01
CONTROLS,RUDDER & RUDDER TAB	FLIGHT CONTROLS	27-20-01
CONTROLS,THROTTLE	ENGINE CONTROLS	76-10-01
COOLER,ENGINE OIL	POWER PLANT	71-00-01
COORDINATOR,TURN	ELEC PANELS,PARTS & INST	39-14-10
COPILOT SEAT	EQUIPMENT/FURNISHINGS	25-13-01
COURTESY LIGHT,CABIN DOOR	LIGHTS	33-11-10
COWLING,ENGINE	POWER PLANT	71-10-01
CRANK,LANDING GEAR EMERGENCY EXTENSION	LANDING GEAR	32-30-20
CURTAINS	EQUIPMENT/FURNISHINGS	25-22-01
CYLINDER ASSY, BRAKE MASTER	LANDING GEAR	32-40-40
D		
DEFLECTOR,HEATER AIR	AIR CONDITIONING	21-20-01
DEFROST CONTROL CABLE	ICE AND RAIN PROTECTION	30-40-10
DEFROST DUCT	ICE AND RAIN PROTECTION	30-40-10
DEFROST VALVE	ICE AND RAIN PROTECTION	30-40-10
DEICER DISTRIBUTOR VALVE	ICE AND RAIN PROTECTION	30-10-01
DEICER RESERVOIR	ICE AND RAIN PROTECTION	30-10-01
DEICING KIT,PROPELLER	ICE AND RAIN PROTECTION	30-62-01
DIPSTICK,OIL	POWER PLANT	71-00-01
DIRECTIONAL GYRO	ELEC PANELS,PARTS & INST	39-14-01
DISTRIBUTION SYSTEM,FUEL	FUEL	28-20-01
DOOR INSTALLATION,MAIN LANDING GEAR	LANDING GEAR	32-10-01
DOOR WINDLACE	EQUIPMENT/FURNISHINGS	25-22-01
DOOR,CABIN	DOORS	52-10-01
DOOR,CABIN BAGGAGE	DOORS	52-30-01
DOOR,EXTERNAL POWER	ELECTRICAL POWER	24-40-01
DOOR,MAIN LANDING GEAR	LANDING GEAR	32-10-30
DOOR,NOSE BAGGAGE	DOORS	52-35-01
DOOR,NOSE LANDING GEAR	LANDING GEAR	32-20-30
DOOR,UTILITY BAGGAGE	DOORS	52-32-01
DOORS,NACELLE ACCESS	NACELLES	54-10-01
DOORS,WING ACCESS	WINGS	57-10-01
DORSAL ASSY	FUSELAGE	53-52-01
DRAIN,STATIC AIR	NAVIGATION & PITOT STATIC	34-10-01
DRAINS,ENGINE	POWER PLANT	71-70-01
DRIVE ASSY,RUDDER TAB CONTROLS	FLIGHT CONTROLS	27-20-15
DUAL INSTRUMENT PANEL	ELEC PANELS,PARTS & INST	39-10-01
DUCT INSTL,FRESH AIR	AIR CONDITIONING	21-22-01
DUCT,CABIN HEATER AIR	AIR CONDITIONING	21-20-01
DUCT,DEFROST	ICE AND RAIN PROTECTION	30-40-10
E		
EIGHT DAY CLOCK	ELEC PANELS,PARTS & INST	39-10-30
ELECTROTHERMAL PROPELLER DEICER	ICE AND RAIN &ROTECTION	30-62-01
ELEVATOR & ELEVATOR TAB CONTROLS	FLIGHT CONTROLS	27-30-01
ELEVATOR AND TAB	STABILIZERS	55-20-01
ELEVATOR ASSY	STABILIZERS	55-20-01
ELEVATOR CONTROL ASSY	FLIGHT CONTROLS	27-30-20
ELEVATOR ELECTRIC TRIM TAB CONTROL	FLIGHT CONTROLS	27-30-30
ELEVATOR TRIM TAB ACTUATOR	FLIGHT CONTROLS	27-30-11

ALPHABETICAL INDEX

COMPONENT ITEM OR SYSTEM NAME	CHAPTER NAME	CHAP/SUB-SECT & UNIT
E		
ELEVATOR TRIM TAB CONTROLS,CONSOLE	FLIGHT CONTROLS	27-30-20
EMERGENCY EXIT	DOORS	52-20-01
EMERGENCY EXTENSION,LANDING GEAR	LANDING GEAR	32-30-20
EMERGENCY LOCATOR	EQUIPMENT/FURNISHINGS.	25-60-01
EMERGENCY STATIC AIR SOURCE	NAVIGATION & PITOT STATIC	34-10-01
EMPENNAGE INSTALLATION	STABILIZERS	55-00-01
ENGINE	ENGINE	72-00-01
ENGINE BAFFLES	POWER PLANT	71-60-01
ENGINE CONTROLS	ENGINE CONTROLS	76-10-01
ENGINE CONTROLS-CONSOLE	ENGINE CONTROLS	76-15-01
ENGINE COWLING	POWER PLANT	71-10-01
ENGINE DRAINS	POWER PLANT	71-70-01
ENGINE DRIVEN FUEL PUMP	POWER PLANT	71-00-01
ENGINE EXHAUST SYSTEM	EXHAUST	78-10-01
ENGINE FUEL HOSE	FUEL	28-20-01
ENGINE FUEL PLUMBING	ENGINE FUEL SYSTEMS	73-10-01
ENGINE GAGE/CYL HEAD,OIL TEMP & PRESS/	ELEC PANELS,PARTS & INST	39-10-01
ENGINE HOURS INDICATOR	ELEC PANELS,PARTS & INST	39-10-01
ENGINE INTERCYLINDER BAFFLE	POWER PLANT	71-60-01
ENGINE MOUNT ASSY	POWER PLANT	71-00-01
ENGINE OIL COOLER	POWER PLANT	71-00-01
ENGINE OIL SYSTEM	OIL	79-00-01
ENGINE SHOCK MOUNTS	POWER PLANT	71-00-01
ENGINE STARTER	STARTING	80-10-01
EXHAUST SYSTEM,ENGINE	EXHAUST	78-10-01
EXTERIOR PLACARDS	REQUIRED PLACARDS	11-20-01
EXTERNAL POWER BOX ASSY	ELECTRICAL POWER	24-40-01
EXTERNAL POWER DOOR	ELECTRICAL POWER	24-40-01
EXTERNAL POWER RECEPTACLE	ELECTRICAL POWER	24-40-01
EXTINGUISHER,FIRE	EQUIPMENT/FURNISHINGS	25-23-01
F		
FAIRINGS,NACELLE	NACELLES	54-50-01
FILLETS,NACELLE	NACELLES	54-50-01
FILTER ASSY,HEATER FUEL	AIR CONDITIONING	21-40-20
FILTER,AIR INTAKE	POWER PLANT	71-02-01
FILTER,FUEL	FUEL	28-20-60
FILTER,INDUCTION AIR	POWER PLANT	71-66-01
FIRE EXTINGUISHER	EQUIPMENT/FURNISHINGS	25-23-01
FIREWALL ASSY	FUSELAGE	53-13-01
FIREWALL ASSY,LOWER	FUSELAGE	53-13-01
FIREWALL ASSY,UPPER	FUSELAGE	53-13-01
FITTING,JACK PAD	FUSELAGE	53-17-50
FITTING,WING ATTACHMENT	FUSELAGE	53-17-50
FIXED INSTRUMENT PANEL	ELEC PANELS,PARTS & INST	39-10-01
FLAP ACTUATOR ASSY	FLIGHT CONTROLS	27-50-10
FLAP ASSEMBLY	WINGS	57-50-01
FLAP MECHANISM	FLIGHT CONTROLS	27-50-01
FLAP MOTOR & GEARBOX ASSY	FLIGHT CONTROLS	27-50-10
FLAP POSITION XMTR,LIMIT & SAFETY SW	FLIGHT CONTROLS	27-50-30
FLAP SWITCH AND POSITION INDICATOR	FLIGHT CONTROLS	27-50-20
FLAP TRACK,INBD	WINGS	57-20-15
FLAP TRACK,OUTBD	WINGS	57-20-15
FLIGHT DATA INSTRUMENT	NAVIGATION & PITOT STATIC	34-10-20
FLIGHT HOURS INDICATOR	ELEC PANELS,PARTS & INST	39-10-01
FLOATING INSTRUMENT PANEL	ELEC PANELS,PARTS & INST	39-14-01
FLOORBOARD INSTALLATION	FUSELAGE	53-20-01
FRAME,SPEAKER GRILL	AIR CONDITIONING	21-22-01
FRESH AIR CONTROL ASSY	AIR CONDITIONING	21-20-01
FRESH AIR DUCT INSTL	AIR CONDITIONING	21-22-01
FRESH AIR OUTLET VALVE	AIR CONDITIONING	21-22-01
FRESH AIR SCOOP ASSY	AIR CONDITIONING	21-22-01
FRONT SPAR CARRY THRU	FUSELAGE	53-17-02
FRONT SPAR CARRY THRU STRUCTURE	FUSELAGE	53-17-01

ALPHABETICAL INDEX

COMPONENT ITEM OR SYSTEM NAME	CHAPTER NAME	CHAP/SUB-SECT & UNIT
F		
FRONT SPAR PARTITION	EQUIPMENT/FURNISHINGS	25-28-01
FUEL BOOST PUMP	FUEL	28-20-01
FUEL CAP AND ADAPTER	FUEL	28-10-20
FUEL CELLS	FUEL	28-10-01
FUEL CONTROL HANDLE	FUEL	28-25-10
FUEL DISTRIBUTION SYSTEM	FUEL	28-20-01
FUEL FILTER	FUEL	28-20-60
FUEL FLOW GAGE	ELEC PANELS,PARTS & INST	39-10-20
FUEL PLUMBING,ENGINE	ENGINE FUEL SYSTEMS	73-10-01
FUEL PRESSURE GAGE	ELEC PANELS,PARTS & INST	39-10-01
FUEL PUMP,HEATER	AIR CONDITIONING	21-40-40
FUEL QUANTITY GAGE	ELEC PANELS,PARTS & INST	39-10-01
FUEL SELECTOR PANEL	FUEL	28-25-10
FUEL SELECTOR VALVE	FUEL	28-20-50
FUEL SELECTOR VALVE CONTROL	FUEL	28-25-10
FUEL STORAGE AND INTERCONNECT	FUEL	28-10-01
FUEL STRAINER	FUEL	28-20-60
FUEL STRAINER ASSY	FUEL	28-10-01
FUEL SYSTEM,STORAGE AND INTERCONNECT	FUEL	28-10-01
FUEL TANKS	FUEL	28-10-01
FUEL TRANSMITTER	FUEL	28-10-01
FUEL VENT SYSTEM	FUEL	28-10-10
FUSELAGE ELECTRICAL EQUIPMENT	ELECTRICAL POWER	24-00-01
FUSELAGE NOSE ASSY	FUSELAGE	53-10-01
FUSELAGE SKINS	FUSELAGE	53-30-01
FUSELAGE STRUCTURE,AFT	FUSELAGE	53-18-01
G		
GAGE,ENGINE/CYL HEAD,OIL TEMP & PRESS/	ELEC PANELS,PARTS & INST	39-10-01
GAGE,FREE AIR TEMPERATURE	ELEC PANELS,PARTS & INST	39-14-70
GAGE,FUEL FLOW	ELEC PANELS,PARTS & INST	39-10-20
GAGE,FUEL PRESSURE	ELEC PANELS,PARTS & INST	39-10-01
GAGE,FUEL QUANTITY	ELEC PANELS,PARTS & INST	39-10-01
GAGE,GYRO VACUUM	ELEC PANELS,PARTS & INST	39-10-01
GAGE,INSTRUMENT VACUUM	ELEC PANELS,PARTS & INST	39-10-01
GAGE,MANIFOLD PRESSURE	ELEC PANELS,PARTS & INST	39-10-01
GAGE,SUCTION	ELEC PANELS,PARTS & INST	39-14-01
GEAR ASSEMBLY,MAIN LANDING	LANDING GEAR	32-10-10
GEAR ASSY,AILERON TAB INDICATOR DRIVE	FLIGHT CONTROLS	27-10-30
GENERATOR	ELECTRICAL POWER	24-30-10
GENERATOR DRIVE BELT	POWER PLANT	71-00-01
GENERATOR PULLEY	POWER PLANT	71-00-01
GLARESHIELD	EQUIPMENT/FURNISHINGS	25-22-01
GLARESHIELD LAMP	LIGHTS	33-11-10
GLOVE COMPARTMENT	ELEC PANELS,PARTS & INST	39-10-01
GOVERNOR,PROPELLER	PROPELLERS	61-20-02
GRILL,SPEAKER	AIR CONDITIONING	21-22-01
GYRO HORIZON	ELEC PANELS,PARTS & INST	39-14-01
GYRO,DIRECTIONAL	ELEC PANELS,PARTS & INST	39-14-01
H		
HANDLE,CABIN DOOR	DOORS	52-10-01
HANDLE,FUEL CONTROL	FUEL	28-25-10
HANGER,COAT	EQUIPMENT/FURNISHINGS	25-23-01
HANGER,GARMENT BAG	EQUIPMENT/FURNISHINGS	25-23-01
HEADLINERS	EQUIPMENT/FURNISHINGS	25-22-01
HEADREST ASSY,CHAIRS	EQUIPMENT/FURNISHINGS	25-23-01
HEAT AND VENT DUCTS	AIR CONDITIONING	21-20-01
HEATED PITOT	ICE AND RAIN PROTECTION	30-30-01
HEATER AIR DEFLECTOR	AIR CONDITIONING	21-20-01
HEATER AIR OUTLET	AIR CONDITIONING	21-20-01
HEATER ASSY	AIR CONDITIONING	21-40-01
HEATER BLOWER ASSY	AIR CONDITIONING	21-40-60

ALPHABETICAL INDEX

COMPONENT ITEM OR SYSTEM NAME	CHAPTER NAME	CHAP/SUB-SECT & UNIT
H		
HEATER CONTROL ASSY	AIR CONDITIONING	21-20-01
HEATER FUEL FILTER	AIR CONDITIONING	21-40-20
HEATER FUEL PLUMBING	AIR CONDITIONING	21-40-20
HEATER FUEL PUMP	AIR CONDITIONING	21-40-40
HEATER FUEL SHUT OFF VALVE	AIR CONDITIONING	21-40-20
HEATER IGNITION ASSY	AIR CONDITIONING	21-40-01
HEATER PLENUM	AIR CONDITIONING	21-20-01
HEATER THERMOSTAT	AIR CONDITIONING	21-20-01
HORIZON GYRO	ELEC PANELS,PARTS & INST	39-14-01
HORIZONTAL STABILIZER	STABILIZERS	55-10-01
HORN,STALL WARNING	ELEC PANELS,PARTS & INST	39-10-30
HOSE ASSY,ENGINE FUEL	FUEL	28-20-01
I		
ICE LIGHT,WING	LIGHTS	33-48-01
IGNITION ASSY,HEATER	AIR CONDITIONING	21-40-01
IGNITION PANEL	IGNITION	74-10-01
IGNITION PANEL & OUTSIDE AIR TEMP	ELEC PANELS,PARTS & INST	39-14-70
INDICATOR ASSY,ELEVATOR TAB	FLIGHT CONTROLS	27-30-20
INDICATOR ASSY,RUDDER TAB	FLIGHT CONTROLS	27-20-15
INDICATOR,AILERON TAB	FLIGHT CONTROLS	27-10-30
INDICATOR,AIRSPEED	NAVIGATION & PITOT STATIC	34-10-20
INDICATOR,ENGINE HOURS	ELEC PANELS,PARTS & INST	39-10-01
INDICATOR,FLAP POSITION	FLIGHT CONTROLS	27-50-20
INDICATOR,FLIGHT HOURS	ELEC PANELS,PARTS & INST	39-10-01
INDICATOR,MIXTURE CONTROL	ELEC PANELS,PARTS & INST	39-10-01
INDICATOR,MIXTURE CONTROL	EXHAUST	78-10-01
INDICATOR,OUTSIDE AIR TEMPERATURE	ELEC PANELS,PARTS & INST	39-14-80
INDICATOR,RATE OF CLIMB	NAVIGATION & PITOT STATIC	34-10-20
INDICATOR,TURN AND BANK	ELEC PANELS,PARTS & INST	39-14-10
INDICATOR,VERTICAL SPEED	ELEC PANELS,PARTS & INST	39-14-30
INDUCTION AIR BOX ASSY	POWER PLANT	71-64-01
INDUCTION AIR CONTROL ASSY	ENGINE CONTROLS	76-12-01
INDUCTION AIR FILTER	POWER PLANT	71-66-01
INDUCTION AIR SYSTEM	POWER PLANT	71-64-01
INSTRUMENT PANEL	ELEC PANELS,PARTS & INST	39-10-30
INSTRUMENT PANEL LIGHTS,OPTIONAL	LIGHTS	33-10-01
INSTRUMENT PANEL PLUMBING	ELEC PANELS,PARTS & INST	39-17-01
INSTRUMENT PANEL,FIXED	ELEC PANELS,PARTS & INST	39-10-01
INSTRUMENT PANEL,FLOATING	ELEC PANELS,PARTS & INST	39-14-01
INSTRUMENT SUBPANEL	ELEC PANELS,PARTS & INST	39-14-40
INTAKE AIR FILTER	POWER PLANT	71-02-01
INTERIOR PLACARDS	REQUIRED PLACARDS	11-30-01
IRIS VALVE ASSY,HEATER	AIR CONDITIONING	21-40-01
J		
JACK PAD FITTING	FUSELAGE	53-17-50
K		
KEEL ASSY	FUSELAGE	53-12-01
KIT,DOWNLOCK INSTL	LANDING GEAR	32-30-01
KIT,ELECTRIC ANTI-ICE	ICE AND RAIN PROTECTION	30-60-10
KIT,PROPELLER DEICING	ICE AND RAIN PROTECTION	30-62-01
KNOB,AILERON TAB CONTROL	FLIGHT CONTROLS	27-10-30
L		
LAMP,CABIN LIGHT	LIGHTS	33-11-10
LAMP,GLARESHIELD	LIGHTS	33-11-10
LAMP,READING	LIGHTS	33-11-10
LANDING GEAR ASSEMBLY,MAIN	LANDING GEAR	32-10-10
LANDING GEAR ASSEMBLY,NOSE	LANDING GEAR	32-20-10

ALPHABETICAL INDEX

COMPONENT ITEM OR SYSTEM NAME	CHAPTER NAME	CHAP/SUB-SECT & UNIT
L		
LANDING GEAR BRAKE PLUMBING	LANDING GEAR	32-40-30
LANDING GEAR DOORS,MAIN	LANDING GEAR	32-10-30
LANDING GEAR EMERGENCY EXTENSION CRANK	LANDING GEAR	32-30-20
LANDING GEAR POSITION,SAFETY & WARNING	LANDING GEAR	32-60-01
LANDING GEAR RETRACT MOTOR	LANDING GEAR	32-30-30
LANDING GEAR RETRACT MOTOR AND GEARBOX	LANDING GEAR	32-30-20
LANDING GEAR WARNING HORN	ELECTRICAL POWER	24-00-01
LANDING LIGHT	LIGHTS	33-40-01
LANDING LIGHTS,WING	LIGHTS	33-40-09
LEAD ASSY,IGNITOR/HEATER/	AIR CONDITIONING	21-40-01
LEADING EDGE & FRONT SPAR ASSY	WINGS	57-20-01
LEADING EDGE ASSY,INBD WING	WINGS	57-20-05
LEADING EDGE ASSY,OUTBD WING	WINGS	57-20-10
LENS RETAINER,OVERHEAD PANEL	AIR CONDITIONING	21-22-01
LID ASSY,BATTERY BOX	FUSELAGE	53-10-01
LIGHT AND DUCT ASSY,OVERHEAD	AIR CONDITIONING	21-22-01
LIGHT INSTALLATION,LANDING	LIGHTS	33-40-01
LIGHT INSTALLATION,NOSE BAGGAGE	LIGHTS	33-30-01
LIGHT INSTALLATION,TAXI	LIGHTS	33-40-01
LIGHT,OSCILLATING BEACON	LIGHTS	33-49-01
LIGHTER,CIGARETTE	EQUIPMENT/FURNISHINGS	25-23-01
LINK,MAIN LANDING GEAR UPLOCK CABLE	LANDING GEAR	32-30-01
LOADMETER	ELEC PANELS,PARTS & INST	39-10-20
LOCK ASSY,CONTROL SURFACE & THROTTLE	FLIGHT CONTROLS	27-70-01
LOCKSET	DOORS	52-10-02
LOOSE TOOLS AND ACCESSORIES	EQUIPMENT/FURNISHINGS	25-10-01
LOWER CABIN SECTION	FUSELAGE	53-14-01
LOWER FIREWALL ASSY	FUSELAGE	53-13-01
LOWER OSCILLATING BEACON	LIGHTS	33-49-01
LOWER ROTATING BEACON	LIGHTS	33-46-01
M		
MAGNETO	POWER PLANT	71-00-01
MAIN GEAR WHEEL	LANDING GEAR	32-40-10
MAIN LANDING GEAR ASSEMBLY	LANDING GEAR	32-10-10
MAIN LANDING GEAR BRAKE ASSY	LANDING GEAR	32-40-20
MAIN LANDING GEAR INSTALLATION	LANDING GEAR	32-10-01
MAIN LANDING GEAR RETRACT ACTUATOR	LANDING GEAR	32-30-20
MAIN LANDING GEAR RETRACT MECHANISM	LANDING GEAR	32-30-01
MAIN LANDING GEAR UPLOCK	LANDING GEAR	32-30-01
MAIN SECTION ASSY,WING	WINGS	57-10-10
MANIFOLD PRESSURE GAGE	ELEC PANELS,PARTS & INST	39-10-01
MASK,OXYGEN	OXYGEN	35-00-21
MAST ASSY,PITOT	NAVIGATION & PITOT STATIC	34-10-01
MIXTURE CONTROL INDICATOR	ELEC PANELS,PARTS & INST	39-10-01
MIXTURE CONTROL INDICATOR	EXHAUST	78-10-01
MIXTURE CONTROLS	ENGINE CONTROLS	76-10-01
MOTOR & GEARBOX ASSY,FLAP DRIVE	FLIGHT CONTROLS	27-50-10
MOTOR AND GEARBOX,LANDING GEAR RETRACT	LANDING GEAR	32-30-20
MOTOR ASSY,LANDING GEAR RETRACT	LANDING GEAR	32-30-30
MOULDING,AFT WINDOW	EQUIPMENT/FURNISHINGS	25-23-01
MOULDING,LH FWD CABIN WINDOW	EQUIPMENT/FURNISHINGS	25-23-01
MOULDING,OPENABLE WINDOW	EQUIPMENT/FURNISHINGS	25-23-01
MOULDING,WINDSHIELD	EQUIPMENT/FURNISHINGS	25-23-01
MOUNT ASSY,ENGINE	POWER PLANT	71-00-01
N		
NACELLE ACCESS DOORS	NACELLES	54-10-01
NACELLE ASSY	NACELLES	54-10-01
NACELLE FAIRINGS	NACELLES	54-50-01
NACELLE FILLETS	NACELLES	54-50-01
NACELLE SKINS	NACELLES	54-30-01
NACELLE STRUCTURE	NACELLES	54-10-01

ALPHABETICAL INDEX

COMPONENT ITEM OR SYSTEM NAME	CHAPTER NAME	CHAP/SUB-SECT & UNIT
N		
NAVIGATION LIGHTS,WING	LIGHTS	33-40-08
NOSE BAGGAGE COMPARTMENT LIGHTS	LIGHTS	33-30-01
NOSE BAGGAGE DOOR	DOORS	52-35-01
NOSE CONE	FUSELAGE	53-50-01
NOSE CONE TAXI LIGHT	LIGHTS	33-40-02
NOSE GEAR SHIMMY DAMPER	LANDING GEAR	32-50-10
NOSE GEAR TAXI AND LANDING LIGHT	LIGHTS	33-40-01
NOSE GEAR TAXI LIGHT	LIGHTS	33-40-03
NOSE LANDING GEAR ASSY	LANDING GEAR	32-20-10
NOSE LANDING GEAR DOOR ASSY	LANDING GEAR	32-20-30
NOSE LANDING GEAR INSTALLATION	LANDING GEAR	32-20-01
NOSE LANDING GEAR RETRACT MECHANISM	LANDING GEAR	32-30-10
NOSE STRUCTURE	FUSELAGE	53-10-01
NOSE WHEEL STEERING INSTALLATION	LANDING GEAR	32-50-01
O		
OIL COOLER,ENGINE	POWER PLANT	71-00-01
OIL DIPSTICK	POWER PLANT	71-00-01
OIL SEPARATOR	POWER PLANT	71-00-01
OIL SYSTEM,ENGINE	OIL	79-00-01
OPTIONAL INSTRUMENT PANEL LIGHTS	LIGHTS	33-10-01
OSCILLATING BEACON LIGHT	LIGHTS	33-47-01
OUTLET,AIR	AIR CONDITIONING	21-20-01
OUTSIDE AIR TEMPERATURE	ELEC PANELS,PARTS & INST	39-14-80
OVERHEAD LIGHT AND DUCT ASSY	AIR CONDITIONING	21-22-01
OVERHEAD PANEL AND DUCTS	AIR CONDITIONING	21-22-01
OVERHEAD PANEL SHELL	AIR CONDITIONING	21-22-01
OVERHEAD SPEAKER ASSY	AIR CONDITIONING	21-22-01
OVERVOLTAGE REGULATOR,ALTERNATOR	POWER PLANT	71-00-02
OXYGEN BOTTLE	OXYGEN	35-00-01
OXYGEN CONSOLE ASSY	OXYGEN	35-00-22
OXYGEN MASK	OXYGEN	35-00-21
OXYGEN MASK STORAGE BOX	OXYGEN	35-00-21
OXYGEN OUTLET VALVE	OXYGEN	35-00-20
OXYGEN REGULATOR	OXYGEN	35-00-20
OXYGEN STORAGE/AFT BAGGAGE/	OXYGEN	35-00-05
OXYGEN STORAGE/NOSE BAGGAGE/	OXYGEN	35-00-01
OXYGEN SYSTEM INSTALLATION	OXYGEN	35-00-20
P		
PANEL ASSY,FIXED	ELEC PANELS,PARTS & INST	39-10-01
PANEL ASSY,FLOATING	ELEC PANELS,PARTS & INST	39-14-30
PANEL SHELL,OVERHEAD	AIR CONDITIONING	21-22-01
PANEL,FUEL SELECTOR	FUEL	28-25-10
PANEL,IGNITION	ELEC PANELS,PARTS & INST	39-14-70
PANEL,INSTRUMENT	ELEC PANELS,PARTS & INST	39-10-30
PARKING BRAKE CONTROL	ELEC PANELS,PARTS & INST	39-10-30
PARKING BRAKE VALVE	LANDING GEAR	32-40-60
PARTITION ASSY,FRONT SPAR	EQUIPMENT/FURNISHINGS	25-28-01
PEDESTAL STRUCTURE	FUSELAGE	53-25-01
PEDESTAL,CONTROL	FUSELAGE	53-25-01
PILOT AND COPILOT SEATS	EQUIPMENT/FURNISHINGS	25-13-01
PILOT SEAT	EQUIPMENT/FURNISHINGS	25-13-01
PITOT AND STATIC SYSTEM	NAVIGATION & PITOT STATIC	34-10-01
PITOT MAST ASSY	NAVIGATION & PITOT STATIC	34-10-01
PITOT TUBE	NAVIGATION & PITOT STATIC	34-10-01
PITOT,HEATED	ICE AND RAIN PROTECTION	30-30-01
PLACARDS,EXTERIOR	REQUIRED PLACARDS	11-20-01
PLACARDS,INTERIOR	REQUIRED PLACARDS	11-30-01
PLENUM,HEATER	AIR CONDITIONING	21-20-01
PLUMBING,BRAKE	LANDING GEAR	32-40-30
PLUMBING,INSTRUMENT PANEL	ELEC PANELS,PARTS & INST	39-17-01
PORTABLE FIRE EXTINGUISHER	FIRE PROTECTION	26-20-01

ALPHABETICAL INDEX

COMPONENT ITEM OR SYSTEM NAME	CHAPTER NAME	CHAP/SUB-SECT & UNIT
P		
POWER PLANT ASSY	POWER PLANT	71-00-01
POWER PLANT INSTALLATION	POWER PLANT	71-00-01
PROPELLER ACCUMULATOR	PROPELLERS	61-24-01
PROPELLER ALCOHOL ANTI-ICE	ICE AND RAIN PROTECTION	30-60-01
PROPELLER CONTROLS	ENGINE CONTROLS	76-10-01
PROPELLER DEICING KIT	ICE AND RAIN PROTECTION	30-62-01
PROPELLER ELECTRIC ANTI-ICE/2 BLADE/	ICE AND RAIN PROTECTION	30-60-10
PROPELLER GOVERNOR	PROPELLERS	61-20-02
PROPELLER,2 BLADED	PROPELLERS	61-10-01
PROPELLER,3 BLADED	PROPELLERS	61-10-04
PULLEY,ALTERNATOR	POWER PLANT	71-00-01
PULLEY,GENERATOR	POWER PLANT	71-00-01
PUMP ASSY,VACUUM	POWER PLANT	71-00-01
PUMP,ENGINE DRIVEN FUEL	POWER PLANT	71-00-01
PUMP,FUEL BOOST	FUEL	28-20-01
PUMP,HEATER FUEL	AIR CONDITIONING	21-40-40
R		
READING LAMP	LIGHTS	33-11-10
REAR SPAR & TRAILING EDGE	WINGS	57-20-15
REAR SPAR CARRY THRU	FUSELAGE	53-17-52
REAR SPAR CARRY THRU STRUCTURE	FUSELAGE	53-17-50
REAR SPAR,WING	WINGS	57-10-30
RECEPTACLE,EXTERNAL POWER	ELECTRICAL POWER	24-40-01
REFLECTOR ASSY	AIR CONDITIONING	21-22-01
REGULATOR,ALTERNATOR OVERVOLTAGE	POWER PLANT	71-00-02
REGULATOR,OXYGEN	OXYGEN	35-00-20
REGULATOR,VOLTAGE	POWER PLANT	71-00-01
RELAY,BATTERY	ELECTRICAL POWER	24-00-01
RELAY,STARTER	ELECTRICAL POWER	24-01-01
REQUIRED PLACARDS	REQUIRED PLACARDS	11-20-01
RESERVOIR ASSY,DEICER	ICE AND RAIN PROTECTION	30-10-01
RESERVOIR,HYDRAULIC BRAKE FLUID	LANDING GEAR	32-40-20
RETAINER,OVERHEAD PANEL LENS	AIR CONDITIONING	21-22-01
RETRACT MECHANISM,MAIN LANDING GEAR	LANDING GEAR	32-30-01
RETRACT MECHANISM,NOSE LANDING GEAR	LANDING GEAR	32-30-10
ROD ASSY,MAIN GEAR RETRACT	LANDING GEAR	32-30-01
ROD ASSY,NOSE GEAR RETRACT	LANDING GEAR	32-30-10
ROD ASSY,NOSE GEAR STEERING	LANDING GEAR	32-50-01
ROTATING BEACON LIGHT	LIGHTS	33-46-01
RUDDER & RUDDER TAB CONTROLS	FLIGHT CONTROLS	27-20-01
RUDDER AND TAB ASSEMBLY	STABILIZERS	55-40-01
RUDDER PEDALS	FLIGHT CONTROLS	27-20-20
RUDDER PEDALS AND LINKAGE	FLIGHT CONTROLS	27-20-20
RUDDER TRIM TAB CONTROLS,CONSOLE	FLIGHT CONTROLS	27-20-15
S		
SADDLE ASSY,DORSAL	FUSELAGE	53-52-02
SCOOP ASSY,FRESH AIR	AIR CONDITIONING	21-22-01
SEAL,UTILITY BAGGAGE DOOR	EQUIPMENT/FURNISHINGS	25-22-01
SEAT BELT,PILOT AND COPILOT	EQUIPMENT/FURNISHINGS	25-13-01
SEAT,COPILOT	EQUIPMENT/FURNISHINGS	25-13-01
SEAT,PILOT	EQUIPMENT/FURNISHINGS	25-13-01
SEPARATOR,OIL	POWER PLANT	71-00-01
SHELL,OVERHEAD PANEL	AIR CONDITIONING	21-22-01
SHIELD,HEATER EXHAUST	AIR CONDITIONING	21-40-01
SHOCK MOUNTS	POWER PLANT	71-00-01
SHOULDER HARNESS & LAP BELT	EQUIPMENT/FURNISHINGS	25-23-01
SHROUD ASSY,HEATER EXHAUST	AIR CONDITIONING	21-40-01
SKINS,FUSELAGE	FUSELAGE	53-30-01
SKINS,NACELLE	NACELLES	54-30-01
SKINS,WING	WINGS	57-30-01
SPAR CARRY THRU,FRONT	FUSELAGE	53-17-01

ALPHABETICAL INDEX

COMPONENT ITEM OR SYSTEM NAME	CHAPTER NAME	CHAP/SUB-SECT & UNIT
S		
SPAR CARRY THRU,REAR	FUSELAGE	53-17-50
SPAR COVERS	EQUIPMENT/FURNISHINGS	25-28-01
SPARK PLUGS	POWER PLANT	71-00-01
SPEAKER ASSY,OVERHEAD	AIR CONDITIONING	21-22-01
STABILIZER,HORIZONTAL	STABILIZERS	55-10-01
STABILIZER,VERTICAL	STABILIZERS	55-30-01
STALL WARNING HORN	ELEC PANELS,PARTS & INST	39-10-30
STARTER,ENGINE	STARTING	80-10-01
STATIC AIR BUTTON	NAVIGATION & PITOT STATIC	34-10-01
STATIC AIR DRAIN	NAVIGATION & PITOT STATIC	34-10-01
STATIC AIR SOURCE,EMERGENCY	NAVIGATION & PITOT STATIC	34-10-01
STATIC WICKS	STATIC DISCHARGING	23-60-01
STEERING,NOSE WHEEL	LANDING GEAR	32-50-01
STEP ASSY,ENTRANCE ASSIST	DOORS	52-60-01
STRAINER ASSY,FUEL	FUEL	28-10-01
STRAINER,FUEL	FUEL	28-20-60
STRAP,COAT HANGER	EQUIPMENT/FURNISHINGS	25-22-01
STRUCTURE INSTL,WEATHER RADAR NOSE	AIR CONDITIONING	21-40-01
SUBPANEL,INSTRUMENT	ELEC PANELS,PARTS & INST	39-14-40
SUCTION GAGE	ELEC PANELS,PARTS & INST	39-14-01
SUNVISOR ASSY	EQUIPMENT/FURNISHINGS	25-23-01
SURFACE DEICER	ICE AND RAIN PROTECTION	30-10-01
SURFACE DEICER BOOTS	ICE AND RAIN PROTECTION	30-10-01
SURFACE DEICER,AUTOMATIC	ICE AND RAIN PROTECTION	30-10-10
SWITCH ASSY,LANDING GEAR SAFETY	LANDING GEAR	32-60-01
SWITCH,ALTERNATOR ON	ELECTRICAL POWER	24-00-01
SWITCH,BATTERY	ELECTRICAL POWER	24-00-01
SWITCH,ELECTRIC TRIM	FLIGHT CONTROLS	27-30-30
SWITCH,FLAP	FLIGHT CONTROLS	27-50-20
SWITCH,GENERATOR ON	ELECTRICAL POWER	24-00-01
SWITCH,IGNITION	ELECTRICAL POWER	24-00-01
SWITCH,THROTTLE WARNING	ENGINE CONTROLS	76-16-01
T		
TAB ASSY,AILERON	WINGS	57-50-10
TACHOMETER	ELEC PANELS,PARTS & INST	39-10-01
TACHOMETER,DUAL ELECTRIC	ELEC PANELS,PARTS & INST	39-10-01
TAIL CONE	FUSELAGE	53-51-01
TANK ASSY,ALCOHOL ANTI-ICE	ICE AND RAIN PROTECTION	30-40-01
TAXI LIGHT	LIGHTS	33-40-01
TAXI LIGHT,NOSE CONE	LIGHTS	33-40-02
TAXI LIGHT,NOSE GEAR	LIGHTS	33-40-03
TERMINAL BOARD,GEAR POSITION INDICATING	ELECTRICAL POWER	24-00-01
THERMOSTAT	AIR CONDITIONING	21-20-01
THROTTLE CONTROLS	ENGINE CONTROLS	76-10-01
THROTTLE WARNING-CONSOLE	ENGINE CONTROLS	76-15-01
TIP ASSY,VERTICAL STABILIZER	STABILIZERS	55-30-01
TIP ASSY,WING	WINGS	57-20-20
TRACK,INBD FLAP	WINGS	57-20-15
TRACK,OUTBD FLAP	WINGS	57-20-15
TRANSFORMER,OVERHEAD SPEAKER	AIR CONDITIONING	21-22-01
TRANSMITTER,EMERGENCY LOCATOR	EQUIPMENT/FURNISHINGS	25-60-01
TRANSMITTER,FUEL	FUEL	28-10-01
TUBE,PITOT	NAVIGATION & PITOT STATIC	34-10-01
TURN AND BANK INDICATOR	ELEC PANELS,PARTS & INST	39-14-10
TURN COORDINATOR	ELEC PANELS,PARTS & INST	39-14-10
U		
UPHOLSTERY,BAGGAGE DOORS	EQUIPMENT/FURNISHINGS	25-22-01
UPHOLSTERY,CABIN	EQUIPMENT/FURNISHINGS	25-22-01
UPLOCK ASSY,MAIN LANDING GEAR	LANDING GEAR	32-30-01
UPPER FIREWALL ASSY	FUSELAGE	53-13-01
UPPER OSCILLATING BEACON	LIGHTS	33-47-01

ALPHABETICAL INDEX

COMPONENT ITEM OR SYSTEM NAME	CHAPTER NAME	CHAP/SUB-SECT & UNIT
U		
UPPER ROTATING BEACON	LIGHTS	33-45-01
UTILITY BAGGAGE DOOR	DOORS	52-32-01
V		
VACUUM GAGE	ELEC PANELS,PARTS & INST	39-10-01
VACUUM INDICATING	VACUUM	37-20-01
VACUUM PUMP ASSY	POWER PLANT	71-00-01
VACUUM SYSTEM	VACUUM	37-10-01
VALVE ASSY,AIR OUTLET	AIR CONDITIONING	21-22-01
VALVE ASSY,DEICER DISTRIBUTION	ICE AND RAIN PROTECTION	30-10-01
VALVE ASSY,IRIS	AIR CONDITIONING	21-40-01
VALVE ASSY,WINDSHIELD DEFROST	ICE AND RAIN PROTECTION	30-40-10
VALVE,AIR OUTLET	AIR CONDITIONING	21-22-01
VALVE,BRAKE SHUTTLE	LANDING GEAR	32-40-50
VALVE,FUEL DRAIN	FUEL	28-20-01
VALVE,FUEL SELECTOR	FUEL	28-20-50
VALVE,HEATER FUEL SHUT OFF	AIR CONDITIONING	21-40-20
VALVE,OXYGEN OUTLET	OXYGEN	35-00-20
VALVE,PARKING BRAKE	LANDING GEAR	32-40-60
VALVE,STATIC AIR DRAIN	NAVIGATION & PITOT STATIC	34-10-01
VENT SYSTEM,FUEL	FUEL	28-10-10
VENT SYSTEM,FUEL STORAGE	FUEL	28-10-10
VERTICAL SPEED INDICATOR	ELEC PANELS,PARTS & INST	39-14-30
VERTICAL STABILIZER	STABILIZERS	55-30-01
VOLTAGE REGULATOR,GENERATOR	POWER PLANT	71-00-01
W		
WARNING SWITCH,THROTTLE	ENGINE CONTROLS	76-16-01
WEB,BAGGAGE COMPARTMENT	EQUIPMENT/FURNISHINGS	25-22-01
WHEEL AND TIRE ASSY,MAIN LANDING GEAR	LANDING GEAR	32-10-20
WHEEL ASSY,MAIN LANDING GEAR	LANDING GEAR	32-40-01
WHEEL ASSY,NOSE LANDING GEAR	LANDING GEAR	32-40-10
WHEEL,TIRE AND TUBE ASSY,NOSE GEAR	LANDING GEAR	32-20-10
WINDLACE,DOORS	EQUIPMENT/FURNISHINGS	25-22-01
WINDOW INSTALLATION,AFT	WINDOWS	56-20-01
WINDOW INSTALLATION,CABIN DOOR	WINDOWS	56-30-01
WINDOW MOULDING,AFT	EQUIPMENT/FURNISHINGS	25-23-01
WINDOW MOULDING,LH FWD	EQUIPMENT/FURNISHINGS	25-23-01
WINDSHIELD AND WINDOWS	WINDOWS	56-10-01
WINDSHIELD ANTI-ICE	ICE AND RAIN PROTECTION	30-40-01
WINDSHIELD DEFROST	ICE AND RAIN PROTECTION	30-40-10
WINDSHIELD DEFROST VALVE	ICE AND RAIN PROTECTION	30-40-10
WINDSHIELD MOULDING	EQUIPMENT/FURNISHINGS	25-23-01
WING ASSY,COMPLETE	WINGS	57-10-01
WING ATTACH BOLTS	WINGS	57-40-01
WING ELECTRICAL	ELECTRICAL POWER	24-01-01
WING FLAP	WINGS	57-50-01
WING FRONT SPAR	WINGS	57-10-20
WING ICE LIGHT	LIGHTS	33-48-01
WING INBOARD LEADING EDGE	WINGS	57-20-05
WING INSTALLATION	WINGS	57-40-01
WING LANDING LIGHTS	LIGHTS	33-40-09
WING NAVIGATION LIGHTS	LIGHTS	33-40-08
WING OUTBOARD LEADING EDGE	WINGS	57-20-12
WING REAR SPAR	WINGS	57-10-30
WING REAR SPAR & TRAILING EDGE ASSY	WINGS	57-20-15
WING SECTION ASSY	WINGS	57-10-10
WING SKINS	WINGS	57-30-01
WING TIP	WINGS	57-20-20
WING TIP,EXTENDED	WINGS	57-20-23

ALPHA-NUMERIC INDEX
LIST OF PAGE EFFECTIVITY

SECTION	PAGE	DATE
ALPHA-NUMERIC INDEX-EFFECTIVITY	1	08/01/01
ALPHA-NUMERIC INDEX	1	08/01/01
	thru	
	82	08/01/01

ALPHA-NUMERIC INDEX

(ALPHA)

PART NUMBER	CHAP/SUB-SECT/UNIT & ITEM
A-SA405	32-40-50-007
A-SA406	32-40-50-008
A-SA407	32-40-50-010
A-SA408	32-40-50-006
A-2000	35-00-20-001
A-321	39-10-30
AA397-1	27-20-10-019
AA684-02	30-10-20
AC271	71-00-01
AC271	71-00-02
AC271	71-00-03
AC271	71-02-01
AC271	71-02-02
AC281	71-02-02
AC281	71-02-01
AF5-1	25-10-01
AF940-416	28-10-20-004
AGC2	24-00-01
AGC5	24-00-01
AGC5	24-01-01
AGX5	39-10-30
ALA19AS	24-30-01-012
ALA20GS	24-30-01-016
ALE1012NS	24-30-01-002
ALE1042AAS1	24-30-01-003
ALE1054R	24-30-01-010
ALE2008AA	24-30-01-007
ALPPH-T6-4	54-10-01
ALPPH-T6-6	57-10-30
ALSF-T8-4	53-18-01
ALSF-T8-5	53-18-01
ALSF-T8-5	53-18-01
ALSF-T8-7	53-18-01
ALT8407	71-00-02
ALT8407	71-00-03
ALT9405	71-02-01
ALT9405	71-02-02-005
ALT9405	24-30-01
ALU1043/B/	24-30-01-005
ALU1045B	24-30-01-011
ALU2038S1	24-30-01-001
ALU23	24-30-01-015
ANX24-5D	35-00-23-008
AN116-5	25-10-01-021
AN116-7	25-10-01-026
AN116-8	25-10-01-024
AN123901	71-02-02
AN123901	71-02-01
AN125964	71-02-01
AN161-16RS	32-10-10-085
AN161-16RS	32-10-20-064
AN165-8R5	27-30-01-026
AN174-34/M/	32-50-01-048
AN175-17A	32-30-10-013
AN200KS6	27-20-01-021
AN200K32	27-10-20-067
AN201KP3A	27-30-11-022
AN201KP4A	27-30-01-006
AN201KP6A	27-30-11
AN201KP6A	27-10-10-008
AN227-6	25-28-01
AN227-6	25-28-01
AN227-6	25-23-01
AN227-6B	25-13-20-068
AN227-6B	25-20-01
AN227-6B	35-00-21-051
AN227-6B	27-50-30
AN227-6B	25-13-01
AN227-7B	25-28-01
AN227-7B	25-28-01
AN227-7B	25-23-01
AN227-7B	25-13-20
AN227-7B	25-20-01
AN227-7B	35-00-21
AN227-7B	25-13-01
AN227-7B	57-10-10
AN227-7B	57-10-10
AN227-7B	57-10-10
AN227-8	53-17-50
AN227-8B	25-23-01
AN227-8B	25-13-20
AN227-8B	27-50-30
AN227-8B	35-00-23
AN227-8B	57-10-10
AN227-9	53-17-50
AN227-9B	25-23-01
AN227-9B	25-13-20
AN227-9B	35-00-23
AN227-9B	57-10-10
AN227-9B	57-10-10
AN227-9B	57-10-10
AN230GB2	25-20-01
AN230WB2	25-20-01
AN230WB2	25-13-01
AN2306B2	25-13-01
AN24-15A	32-20-05-037
AN253-2-513	39-10-01-018
AN253-2-513	39-10-10-009
AN2552A3A	24-40-01-004
AN26-31/M/	27-30-01
AN3	76-12-01
AN3-14A/M/	25-20-20-008
AN3-14A/M/	25-13-40-020
AN3-14A/M/	25-13-40-021
AN3-14A/M/	25-13-30-020
AN3-14A/M/	25-13-30-009
AN3-14A/M/	25-13-40-009
AN3-14A/M/	25-13-20-012
AN3-14A/M/	25-13-20-023
AN3-14A/M/	25-13-20-025
AN3-3A/M/	55-10-01-053
AN3-3A/M/	30-60-01
AN3-4A	53-25-01
AN3-4A	52-10-01
AN3-4A	32-10-10
AN3-51A	25-10-01
AN3-6A/M/	71-66-01-042
AN3-63A	71-62-01-068
AN3H31A/M/	28-20-60-007
AN3022-1	27-50-20
AN3022-3	39-10-30-036
AN3022-3	39-14-01-031
AN3042-1	57-20-22-043
AN3042-2	57-20-22
AN3057-12	30-60-10
AN3066-4	27-50-01-027
AN310-4	32-50-01
AN310-4	28-10-20-024
AN310-4	28-10-20-003
AN310-5	32-10-20
AN310-5	32-10-10
AN310-5	32-50-01
AN3106A14S7S	39-10-30-011
AN3106A20-15S	30-60-10-029
AN3111-2	24-00-01
AN3111-2	53-51-01-003
AN3121-313	39-10-30-013
AN3140-327	39-10-30-012
AN3140-327	24-00-01-021
AN3140-327	24-00-01
AN315-3	21-40-01-048
AN315-3R	32-30-10-022
AN315-4R	54-10-01
AN315-5R	24-00-01
AN316-4	32-40-40-002
AN316-4L	27-10-01-048
AN316-4R	27-10-01-046
AN316-4R	27-10-01-068
AN316-4R	32-50-01-021
AN316-4R	32-30-01-035
AN316-4R	32-30-01
AN316-4R	32-10-30-032
AN316-4R	71-66-01
AN316-4R	76-10-01-025
AN316-4R	76-10-01-010
AN316-4R	57-50-10-042
AN316-4R	76-10-01-035
AN316-4R	76-10-01-038
AN316-4R	54-10-01
AN316-4R	53-18-01
AN316-5	32-40-40
AN316-5	32-40-41-002
AN316-5	32-40-41-030
AN316-5R	27-10-01-057
AN316-5R	24-00-01
AN316-6R	27-20-20-064
AN316-6R	27-20-10-007
AN316-6R	32-50-01-006
AN316-6R	27-30-01
AN316-6R	32-30-10-040
AN316-6R	32-30-10-057
AN316-6R	32-30-01-014
AN316-7L	32-30-10-038
AN316B-2	33-30-01-002
AN3169-1	57-20-15-082
AN3169-1	57-20-15
AN3169-1	27-50-30-009
AN3169-1	21-40-01-061
AN320-3	57-50-10-047
AN320-8	28-10-20-041
AN3200-30	30-60-10-028
AN3210-1	27-50-30-010
AN3210-1	33-30-01-003
AN322-4D	34-10-01-011
AN3234-2	32-60-01-002
AN3234-2	32-60-01-005
AN3234-2	76-15-01-045
AN3234-2	24-00-01-039
AN340-8	21-40-60-005
AN341-10	39-10-01
AN3432-6-12	54-10-01-021
AN3435-2-12	54-10-01-019
AN3437-1-13	54-10-01-020
AN345-10	53-52-03
AN345-10	53-25-01
AN345-10	32-40-31
AN345-10	21-40-01
AN345-10	21-40-01
AN345-10	21-22-50-016
AN365-10	28-10-10
AN365-1032	32-10-10
AN365-1032	52-10-01
AN365-428	25-20-01
AN365-428	54-10-01
AN365-524	32-10-10-011
AN365-632	57-10-10
AN365-632	24-01-01
AN365-832	57-10-10
AN366-1032	54-10-01
AN366-1032	57-10-10
AN366-1032	57-10-10
AN366-1032	53-25-01
AN366-1032	57-20-05
AN366-428	54-10-01
AN366-832	25-28-01
AN366DF428	54-10-01

PART NUMBER	CHAP/SUB-SECT/UNIT & ITEM	PART NUMBER	CHAP/SUB-SECT/UNIT & ITEM	PART NUMBER	CHAP/SUB-SECT/UNIT & ITEM
AN366F1032	54-10-01	AN5-25A/M/	30-64-01-005	AN530-8-4	57-10-10
AN366F1032	57-10-10	AN5-26A	30-62-01-005	AN535-2-2	25-23-01
AN366F1032	57-10-10	AN5-35A/M/	32-40-02-006	AN535-6-6	25-23-01-062
AN366F1032	33-49-01	AN500-8-10	28-20-50-008	AN5546-1	71-00-01-016
AN366F1032	53-18-01	AN501A10	25-20-10	AN5546-1	71-00-02-016
AN366F1032	53-15-01	AN501A10-4	32-40-20-007	AN5546-1	71-02-02-014
AN366F1032	57-50-10	AN501A10-4	32-40-21-010	AN5546-1	71-02-01-015
AN366F428	53-10-01	AN502-10-10	27-20-01-020	AN5546-1	71-00-03-016
AN366F428	53-10-01	AN502-10-10	55-21-01-021	AN565A61-4	27-30-30-014
AN366F428	53-11-01	AN502-10-10	55-40-01	AN565B6H2	33-45-01-021
AN366F428	53-10-01	AN502-10-10	55-40-01	AN565B6H2	33-46-01-003
AN366F428	32-50-01	AN505-832-46	27-50-10-003	AN565D4H2	33-46-01-013
AN366F832	57-10-10	AN507-1032R20	52-10-01	AN565D4H2	33-45-01-012
AN366F832	33-44-01	AN507-1032R8	53-16-50	AN565D4H6	32-60-01
AN366F832	55-20-01	AN507-4R4	32-60-01-038	AN565D6H4	33-49-01-002
AN366F832	53-17-01	AN507-6R	25-22-01	AN565D8-3	25-23-01-049
AN366F832	53-18-01	AN507-6R8	25-22-05	AN565D8H14	21-40-60-032
AN366F832	71-62-01	AN507-632	24-01-01	AN6-25/M/	27-30-01
AN366F832	57-20-21	AN507-632R5	33-47-01-007	AN6-27A	32-40-21-001
AN366F832	57-20-12	AN507-632R8	57-20-05	AN6011-1B	35-00-05
AN366F832	57-20-22	AN507-640R4	34-10-10	AN6012-1A	35-00-21-009
AN366F832	57-20-05	AN507-832R7	52-10-01	AN6012-1A	35-00-22-010
AN366F832	57-20-05	AN507B632-14	25-22-01-080	AN6039-5-24	35-00-20-029
AN366F832	57-20-10	AN507B632-14	25-16-10-010	AN6227-13	27-50-01-015
AN366F832	57-20-10	AN507C1032-10	33-47-01-008	AN6227-13	32-50-01-027
AN366F832	57-20-10	AN507C1032-40	33-47-01-002	AN6227-31	32-10-10-029
AN366F832	57-20-10	AN509-10R26	30-60-10-017	AN6227B1	32-50-10-012
AN366F832	57-20-10	AN509-8R8	34-10-10	AN6227B10	32-40-40-009
AN366F832	57-20-10	AN509-832-8	57-20-05	AN6227B11	32-40-40
AN366F832	57-20-10	AN509-832-8	57-20-05	AN6227B11	32-40-41-013
AN366F832	57-20-05	AN515-4-3	53-16-51	AN6227B13	32-50-10-010
AN373F832	57-20-10	AN515-4-4	33-46-01-014	AN6227B23	32-40-20-006
AN380-2-1	32-10-10	AN515-4-4	33-45-01-013	AN6227B25	32-40-21-009
AN380-2-2	28-10-20	AN515-6-4	57-10-10	AN6227B27	32-40-22-003
AN380-2-2	53-17-50	AN515-6-40	32-40-30	AN6227B3	32-40-50-009
AN380-2-3	76-15-01	AN515-6R10	30-40-10-016	AN6227B30	32-20-20-036
AN380-2-3	32-10-20	AN515-6R3	25-13-10	AN6227B31	32-10-20-036
AN380-2-3	32-10-10	AN515-6R5	33-47-01-012	AN6227B5	32-40-61-009
AN380-2-3	30-40-10	AN515-6R6	33-30-01	AN6227B5	32-40-40-008
AN380-3-4	32-30-20	AN515-6R8	33-46-01	AN6227B6	32-40-40
AN380-4-8	32-10-20	AN515-8	33-45-01-004	AN6227B6	32-40-41-006
AN380C2-2	32-40-41-003	AN515-8R	57-20-05	AN6227B6	32-20-10
AN380C2-2	32-40-40-003	AN515-8R12	53-18-01	AN6227B6	32-20-20-052
AN380C2-2	32-40-40-012	AN515-8R6	53-18-01	AN6227B7	32-40-61-008
AN381-3-8	28-10-20-037	AN515-8R6	71-62-01	AN6227B7	32-50-10-011
AN392-13	76-15-01-016	AN515-8R6	71-60-01-071	AN6227B7	32-40-22-012
AN392-15	52-20-01-020	AN515-8R8	57-10-10	AN6227B7	32-40-22-016
AN392-23	53-17-50	AN515-8R8	71-62-01	AN6227B8	27-30-11
AN392-35	27-20-01	AN515-8R8	21-22-40	AN6227B9	32-40-40-014
AN393-13	25-21-30-027	AN515-8R8	34-10-10	AN6227B9	32-30-20-012
AN393-15	21-40-01-083	AN5158R6	71-60-01-076	AN6230-1	32-20-05-039
AN393-19	21-40-01	AN520-10-6	32-40-31	AN6230-2	32-20-05-029
AN393-29	32-10-20-078	AN520-10-8	32-40-30	AN6230-7	32-10-10-028
AN393-77	32-30-20-005	AN520-10-8	32-40-30	AN6230B1	32-20-10-053
AN4-11A	32-30-10-007D	AN520-10R	30-60-01	AN6230B2	32-20-10-052
AN4-14A/M/	32-40-10-002	AN520-10R12	30-60-10-013	AN6230B4	32-20-20-035
AN4-22A/M/	32-40-10-015	AN520-10R28	53-10-01	AN6230B5	32-10-20-035
AN4-24A/M/	32-20-05	AN520-10R8	28-10-10	AN6231A19	32-20-10-055
AN4-6A	54-10-01	AN520-6R4	34-10-10	AN6264-4-14 1/4	21-40-20-019
AN4A14	25-20-01-022	AN525-10	53-52-01	AN6270-4-10	71-00-01-021
AN4076-1	71-00-02	AN525-10-8	53-16-51	AN6270-4-10	71-00-02-021
AN4076-1	71-00-01	AN525-10R	25-20-10	AN6270-4-10	71-00-03-021
AN4076-1	71-02-02	AN525-10R8	53-17-50	AN6270-4-11	71-02-01-042
AN4076-1	71-02-01	AN525-1016	53-16-50	AN6270-4-11	71-02-01-047
AN4076-1	71-00-03	AN525R8-18	71-60-01	AN6270-4-11	71-02-02-047
AN42-4	32-10-10-084	AN526-632-22	32-10-20-067	AN6270-4-11	71-02-02-052
AN42-4	32-10-20-061	AN526-632-40	32-40-31	AN6270-4-12	34-10-01-010
AN42D16	24-01-01-020	AN53-6R6	25-22-01	AN6270-4-12	34-10-10-039
AN5-11	32-10-10	AN530-6-6	53-17-01	AN6270-4-12	34-10-01-018
AN5-13	32-10-10-038	AN530-6R	25-28-01	AN6270-4-15	39-17-01-010
AN5-13/M/	32-10-20-028	AN530-6R6	53-16-51	AN6270-4-15	39-17-10-016
AN5-13A	32-40-01-003	AN530-6R6	53-16-50	AN6270-4-17	39-17-01-009

PART NUMBER	CHAP/SUB-SECT/UNIT & ITEM
AN6270-4-17	39-17-01-006
AN6270-4-17	34-10-10-028
AN6270-4-20	39-17-01-005
AN6270-4-22	71-00-01
AN6270-4-22	71-00-02
AN6270-4-25	39-17-01-016
AN6270-4-27	39-17-01-017
AN6270-4-28	71-02-01
AN6270-4-28	71-02-02
AN6270-4-47	34-10-10-037
AN6270-4-47	34-10-01-012
AN6270-6-14	39-17-01-027
AN6270-6-17	39-17-10-013
AN6270-6-18	39-17-10-014
AN6287-1	30-10-01-064
AN6290-10	30-10-20-061
AN6290-4	32-40-61-007
AN6290-4-10	71-00-02
AN6290-5	32-10-10-026
AN6290-6	32-10-10-051
AN6290-6	32-10-10
AN6290-6	32-40-20-011
AN6290-8	61-24-01-002
AN664-2	27-70-01-008
AN665-10R	32-30-01-043
AN665-21R	21-40-01-047
AN665-21R	52-10-01-028
AN665-21R	52-10-02-014
AN737RM22	28-10-01-005
AN737RM22	28-10-10
AN737RM22	28-10-10
AN737RM22	28-20-01
AN737RM22	28-20-01
AN737RM22	28-20-01
AN737RM22	28-10-10
AN737RM22	28-10-10
AN737RM26	30-10-01
AN737RM38	71-72-01-002
AN737RM38	71-00-02-044
AN737RM38	71-00-03-044
AN737TW22	34-10-10
AN737TW34	39-17-01
AN737TW98	57-20-21-036
AN737TW98-114	57-20-22-016
AN741-4P	76-12-01-024
AN741-4P	76-12-01
AN742	71-70-01
AN742-10	71-02-01-024
AN742-14	32-10-10
AN742-14C	36-10-01-016
AN742-14C	71-02-01
AN742-14C	71-02-02-029
AN742-15	32-10-10
AN742-2	55-40-01
AN742-3	53-52-02-017
AN742-3	21-22-10-050
AN742-3	21-22-20-058
AN742-4	32-30-01
AN742-4D	30-40-01-002
AN742-6	76-10-01-020
AN742-6C	32-10-10
AN742-6C	32-10-20
AN742D10	76-10-01-032
AN742D6	21-20-01
AN742D8	36-10-10
AN742D8	36-10-01-056
AN742D9C	27-50-01-020
AN743	76-10-01-040
AN743-12	73-12-01
AN743-12	76-12-01
AN743-12	76-12-01
AN743-12	24-01-01-022
AN743-12	27-50-01-025
AN743-12	53-17-52
AN743-12	36-10-01-007
AN743-12	32-40-30
AN743-12	32-40-30
AN743-13	34-10-01-038
AN743-13	34-10-10-018
AN743-13	36-10-10-009
AN743-13	53-10-01
AN743-13	53-52-02-016
AN743-13	53-11-01
AN743-13	54-10-01
AN743-13	21-22-20-057
AN743-13	21-22-01-011
AN743-13	21-22-01-018
AN743-13	21-22-10-049
AN743-6	71-02-01-031
AN743-6	71-02-02-036
AN743-6	32-40-31
AN743P13	78-10-01
AN749-1-4	30-60-01-012
AN749-1-6	30-60-01-008
AN750-6	25-23-01
AN750-6	25-23-01-043
AN7502-20	32-20-01
AN7502-24	32-10-20-058
AN7510-1	57-50-10-019
AN780-3	35-00-01-014
AN780-3	35-00-22-021
AN780-3	35-00-21-011
AN780-3	35-00-21-018
AN783-6D	21-40-20-001
AN783-6D	28-20-01-002
AN789-4	32-40-30-007
AN790-3	35-00-21-003
AN790-3	35-00-22-016
AN790-3	35-00-22-004
AN791-3	35-00-22-012
AN791-3	35-00-22-036
AN795-3	35-00-22-014
AN795-3	35-00-01-016
AN804-4D	28-20-50-031
AN804-4D	32-40-31-025
AN804-4D	32-40-30-066
AN806D10	36-10-01-058
AN807-6D	30-10-01-037
AN807-8D	36-10-10-040
AN807-8D	39-17-20-012
AN807-8D	39-17-30-022
AN809-1	32-20-05
AN813-1A	32-10-10-025
AN813-1B	32-20-10
AN815-4	21-40-20-003
AN815-4D	32-40-31-061
AN815-4D	32-40-31-036
AN815-4D	32-40-31-050
AN815-4D	28-20-01
AN815-4D	28-20-01-013
AN815-4D	32-40-22-015
AN815-4D	32-40-30-005
AN815-4D	32-40-30-032
AN815-4D	32-40-30-045
AN815-4D	32-10-10-049
AN815-4D	30-60-01-031
AN815-5D	34-10-01
AN815-5D	35-00-20-003
AN815-5D	35-00-21-033
AN815-5D	35-00-20-036
AN815-5D	35-00-24-037
AN815-5D	35-00-24-019
AN815-5D	35-00-24-028
AN815-5D	35-00-23-006
AN815-5D	35-00-22-055
AN815-6D	30-10-30-041
AN815-6D	28-20-01
AN815-6D	28-20-01
AN815-6D	28-20-01
AN815-8D	30-10-10-037
AN816-10	30-10-10-028
AN816-2D	39-17-01-031
AN816-2D	39-17-01-035
AN816-4	39-17-10-044
AN816-4	39-17-20-027
AN816-4	21-40-20-016
AN816-4B	30-60-01
AN816-4B	71-72-01
AN816-4D	71-02-02
AN816-4D	71-02-01
AN816-4D	39-17-20-034
AN816-4D	39-17-10-021
AN816-4D	39-17-10-036
AN816-4D	39-17-10
AN816-4D	35-00-22-046
AN816-4D	34-10-10-029
AN816-4D	34-10-01-014
AN816-4D	39-17-30-013
AN816-4D	39-17-30-006
AN816-4D	31-30-01
AN816-4D	32-40-30-050
AN816-5D	35-00-20-006
AN816-5D	35-00-20-039
AN816-5D	35-00-21-035
AN816-5D	35-00-21-043
AN816-5D	35-00-20-009
AN816-5D	35-00-20-018
AN816-5D	35-00-20-034
AN816-5D	35-00-20-024
AN816-5D	35-00-22-058
AN816-5D	35-00-23-003
AN816-5D	35-00-22
AN816-5D	35-00-24-023
AN816-5D	35-00-24-045
AN816-6-6D	28-20-01
AN816-6D	28-20-01
AN816-6D	30-10-01-033
AN816-6D	30-10-01-012
AN816-6D	39-17-01-036
AN816-8D	28-20-60
AN816-8D	30-10-10
AN816-8D	30-10-20-056
AN816-8D	28-20-01
AN821-4D	28-20-01
AN821-4D	28-10-10-011
AN821-4D	32-40-31-063
AN821-4D	32-40-30
AN821-4D	32-40-31-026
AN821-4D	32-40-30-033
AN821-4D	30-60-01-044
AN821-4D	28-20-01
AN821-5D	35-00-24-034
AN821-5D	35-00-23-009
AN821-5D	35-00-20-028
AN821-6D	30-10-01-029
AN821-6D	30-10-30-043
AN821-6D	28-20-01
AN821-6D	28-20-01
AN822-10	30-10-10-042
AN822-10D	39-17-01
AN822-10D	71-02-01
AN822-10D	71-02-01
AN822-2D	39-17-01-028
AN822-2D	39-17-01-032
AN822-2D	39-17-01-033
AN822-4	71-00-01-020

PART NUMBER	CHAP/SUB-SECT/UNIT & ITEM	PART NUMBER	CHAP/SUB-SECT/UNIT & ITEM	PART NUMBER	CHAP/SUB-SECT/UNIT & ITEM
AN822-4	71-00-02-020	AN832-4D	39-17-10-033	AN837-4	71-00-02-049
AN822-4	71-00-03-020	AN832-4D	39-17-10-042	AN837-4D	71-00-02-038
AN822-4	21-40-20-020	AN832-4D	39-17-10-019	AN837-4D	34-10-10-027
AN822-4	21-40-20-007	AN832-4D	30-60-01-042	AN837-4D	39-17-20-035
AN822-4D	28-10-01	AN832-4D	32-10-10-058	AN837-4D	39-17-01-015
AN822-4D	28-20-01	AN832-4D	28-20-50-029	AN837-4D	39-17-01-002
AN822-4D	32-40-30-024	AN832-4D	28-20-01-010	AN837-4D	39-17-10-041
AN822-4D	32-40-30	AN832-4D	21-40-20-005	AN837-4D	39-17-10-051
AN822-4D	32-40-30-049	AN832-4D	32-40-31-048	AN837-4D	39-17-10-017
AN822-4D	30-40-01-009	AN832-4D	32-40-31-034	AN837-4D	39-17-01-037
AN822-4D	30-40-01-005	AN832-4D	32-40-31-006	AN837-4D	71-00-03-038
AN822-4D	30-60-01-023	AN832-4D	32-40-30-034	AN837-4D	30-60-01
AN822-4D	71-02-02-051	AN832-4D	32-40-30-057	AN837-4D	32-10-20-044
AN822-4D	71-02-01-046	AN832-4D	32-40-30-010	AN837-4D	28-20-50-030
AN822-4D	71-70-01	AN832-6D	28-20-01	AN837-4D	32-40-30-011
AN822-4D	34-10-10-038	AN832-6D	30-10-01-015	AN837-4D	32-40-30-003
AN822-5D	35-00-20-030	AN832-6D	30-10-01-035	AN837-4D	32-40-30-013
AN822-5D	35-00-20-023	AN832-6D	36-10-10-016	AN837-4D	32-40-30-043
AN822-5D	35-00-21-048	AN832-6D	34-10-01	AN837-4D	32-40-31-057
AN822-5D	35-00-21-040	AN832-6D	61-24-01-014	AN837-4D	32-40-31-039
AN822-5D	35-00-22-062	AN833-10D	36-10-01-033	AN837-4D	32-40-31-043
AN822-50	35-00-24-003	AN833-10D	30-10-30-027	AN837-4D	32-40-31-045
AN822-6D	28-20-50	AN833-4	28-20-01	AN837-6	28-20-01
AN822-6D	28-20-01-032	AN833-4	39-17-10-024	AN837-6	30-10-10-043
AN822-8D	71-00-02	AN833-4	39-17-20-015	AN837-6	73-10-01
AN822-8D	71-00-02	AN833-4	39-17-30-014	AN837-6D	61-24-01-012
AN822-8D	71-00-01-043	AN833-4	71-02-01-044	AN837-6D	28-20-01
AN822-8D	71-00-01-040	AN833-4	71-02-02-049	AN837-8	28-20-01
AN823-4D	39-17-01-021	AN833-4D	71-00-03-022	AN837-8	73-10-01-004
AN823-4D	71-70-01	AN833-4D	39-17-30-008	AN838-10	30-10-10-034
AN823-4D	28-20-01-045	AN833-4D	39-17-30-003	AN838-10	30-10-20-037
AN823-4D	28-20-01-058	AN833-4D	71-00-01-027	AN838-10D	71-00-03-027
AN823-4D	32-40-30-017	AN833-4D	71-00-02-022	AN838-10D	71-02-01
AN823-5D	35-00-22-033	AN833-4D	32-40-31-067	AN838-10D	71-00-02-027
AN823-5D	35-00-21-029	AN833-4D	34-10-01-019	AN838-8D	71-00-02
AN823-6D	39-17-01-029	AN833-4D	71-00-02	AN838-8D	71-00-01-041
AN823-6D	39-17-10-012	AN833-4D	39-17-20-024	AN840-10	71-00-01
AN824-4D	34-10-10-032	AN833-4D	39-17-20-029	AN840-10	71-00-02
AN824-4D	34-10-10-036	AN833-4D	39-17-10	AN840-10	71-00-03
AN824-4D	34-10-01	AN833-4D	39-17-01-004	AN840-10	30-10-20-033
AN824-4D	34-10-01	AN833-4D	28-20-50-027	AN840-4	71-70-01-031
AN824-4D	32-40-30-073	AN833-4D	30-40-01-003	AN840-4	71-70-01
AN824-4D	32-40-31-008	AN833-4D	30-60-01-038	AN840-6D	30-10-20
AN824-4D	28-20-01	AN833-4D	30-60-01-026	AN840-6D	30-10-01
AN824-4D	28-10-10-017	AN833-4D	30-60-01-034	AN840-6D	30-10-01
AN824-4D	28-10-10	AN833-4D	30-60-01	AN840-6D	30-10-01
AN824-4D	30-60-01-028	AN833-4D	28-20-01-015	AN840-6D	30-10-01-011
AN824-5D	35-00-20-007	AN833-4D	28-20-01-023	AN840-8	71-02-01-020
AN824-5D	35-00-24-016	AN833-4D	28-20-01	AN840-8	71-00-03-019
AN824-5D	35-00-24-001	AN833-4D	32-40-31-041	AN840-8	71-00-02-019
AN824-5D	35-00-24-035	AN833-4D	32-40-31-065	AN840-8	71-00-01
AN824-6D	36-10-10-020	AN833-4D	32-40-30	AN840-8	71-00-01-019
AN824-6D	34-10-10-004	AN833-4D	32-40-30	AN840-9	71-00-01
AN824-6D	30-10-20-049	AN833-4D	32-40-30-030	AN840-9	71-00-02
AN824-6D	28-25-10-025	AN833-4D	32-40-30-053	AN840-9	71-00-03
AN824-6D	30-10-10-007	AN833-4D	32-40-31-030	AN842-10D	71-00-02-026
AN824-6D	28-20-01	AN833-6	28-20-01	AN842-10D	71-02-01-026
AN824-6D	28-20-01	AN833-6	73-10-01	AN842-10D	71-00-03-026
AN824-6D	28-20-01	AN833-6D	61-24-01	AN842-4D	39-17-01-034
AN824-8D	36-10-10-043	AN833-6D	61-24-01	AN842-4D	39-17-01-030
AN825-4D	30-40-01-008	AN833-6D	28-20-50-025	AN842-6D	30-10-01-013
AN825-6D	28-20-01	AN833-6D	30-10-01-036	AN842-6D	30-10-10
AN826-4D	30-60-01-006	AN833-6D	28-20-01	AN842-6D	30-10-20
AN826-4D	34-10-10-030	AN833-6D	28-20-01	AN842-8D	71-00-02
AN826-4D	34-10-01-016	AN833-8	73-10-01	AN844-10	71-00-03
AN826-4D	34-10-01-013	AN834-4D	32-40-31-010	AN844-10	71-00-02
AN826-6D	28-20-01	AN834-4D	32-40-30-006	AN844-10	71-00-01
AN827-5D	35-00-20-015	AN837-4	28-20-01	AN844-10	30-10-20-032
AN832-10D	30-10-20-064	AN837-4	30-60-01-037	AN844-10	30-10-10-029
AN832-4D	34-10-10-008	AN837-4	73-10-01	AN844-4	71-00-03-033
AN832-4D	34-10-10-040	AN837-4	73-10-01-003	AN844-4	71-00-01-032
AN832-4D	34-10-01-009	AN837-4	71-00-01-045	AN844-4	71-00-02-033

PART NUMBER	CHAP/SUB-SECT/UNIT & ITEM
AN846-4D	34-10-01-007
AN846-4D	34-10-10-043
AN848-10D	39-17-10-003
AN865-1	71-66-01-024
AN889-1	57-20-22
AN8970B2-327	39-14-60-004
AN900-10	71-02-02
AN900-10	71-02-01
AN900-9	32-30-20
AN910-1	35-00-01-013
AN910-1D	28-20-01
AN910-10	28-10-01
AN910-2D	28-20-01
AN910-3D	30-10-10-003
AN911-1	21-40-20-017
AN911-1	32-40-30
AN911-1D	35-00-21-027
AN911-1D	35-00-22-031
AN911-2D	30-10-01
AN911-2D	30-10-10
AN911-3D	39-17-01-042
AN912-1D	39-17-01
AN912-1D	28-20-01
AN912-2D	30-10-10
AN912-3	71-00-01
AN912-3	71-00-02
AN912-4D	71-00-01
AN912-4D	71-00-02
AN912-4D	71-00-02
AN912-4D	71-00-01
AN912-4D	30-10-20-057
AN913-1D	39-17-01
AN913-1D	35-00-20
AN913-1D	35-00-20
AN913-1S	28-20-01
AN913-1S	28-20-01
AN913-2D	36-10-01-057
AN913-2D	39-17-10-011
AN913-25	21-40-01-002
AN914-1D	32-60-01-022
AN915-1	71-72-01-011
AN915-1	71-70-01-023
AN916-6D	34-10-01-029
AN917-1D	31-30-01
AN917-1D	30-60-01
AN917-2D	30-10-01-026
AN918-2D	30-10-10-011
AN918-2D	30-10-20-025
AN918-2D	30-10-20-010
AN918-2D	30-10-01-010
AN918-3D	30-10-10-013
AN919-12	28-20-01
AN919-12D	30-10-10-005
AN919-14D	30-10-20-044
AN919-15D	36-10-01-054
AN919-19D	30-10-30-074
AN919-6D	28-20-01
AN919-6D	36-10-10-014
AN919-6D	34-10-10-011
AN919-6D	32-10-10-050
AN919-6D	32-10-10-065
AN919-6D	32-10-20-065
AN920-8D	28-20-01
AN921-8D	28-20-01
AN924-10D	30-10-20-060
AN924-10D	30-10-10
AN924-10D	71-00-03
AN924-10D	36-10-01
AN924-10D	71-00-02
AN924-4	71-00-01
AN924-4	71-00-02
AN924-4	39-17-10
AN924-4	39-17-20
AN924-4	32-10-10
AN924-4	73-10-01
AN924-4	73-10-01
AN924-4	30-10-10
AN924-4	28-20-01
AN924-4D	28-20-50
AN924-4D	28-20-50
AN924-4D	28-20-50
AN924-4D	28-20-01
AN924-4D	28-20-01
AN924-4D	28-20-01
AN924-4D	28-20-01
AN924-4D	30-10-01
AN924-4D	71-02-02
AN924-4D	71-02-01
AN924-4D	71-00-03
AN924-4D	30-60-01
AN924-4D	30-60-01
AN924-4D	30-60-01
AN924-4D	30-60-01
AN924-4D	32-40-30
AN924-4D	32-10-20
AN924-4D	32-40-30
AN924-4D	32-40-30
AN924-4D	32-40-30
AN924-4D	32-40-30
AN924-4D	32-40-30
AN924-4D	32-40-30
AN924-4D	32-40-30
AN924-4D	32-40-30
AN924-4D	32-40-30
AN924-4D	32-40-31
AN924-4D	34-10-10
AN924-4D	34-10-10
AN924-4D	34-10-10
AN924-4D	34-10-01
AN924-4D	32-40-31
AN924-4D	32-40-31
AN924-4D	32-40-31
AN924-4D	32-40-31
AN924-4D	39-17-10
AN924-4D	39-17-10
AN924-4D	39-17-20
AN924-4D	39-17-20
AN924-4D	39-17-30
AN924-4D	39-17-20
AN924-4D	39-17-10
AN924-4D	39-17-10
AN924-4D	39-17-10
AN924-4D	39-17-01
AN924-4D	39-17-10
AN924-4D	39-17-10
AN924-4D	39-17-30
AN924-4D	39-17-30
AN924-4D	39-17-01
AN924-4D	39-17-01
AN924-4D	39-17-01
AN924-4D	71-00-02
AN924-4D	71-00-03
AN924-4D	71-00-01
AN924-6	61-24-01-005
AN924-6	34-10-01
AN924-6	73-10-01
AN924-6	73-10-01
AN924-6	30-10-10
AN924-6	28-20-01
AN924-6	28-20-01
AN924-6D	28-20-01
AN924-6D	28-20-50
AN924-6D	28-20-01
AN924-6D	28-20-01
AN924-6D	34-10-10
AN924-6D	36-10-10
AN924-8	28-20-01
AN924-8	73-10-01
AN924-8	73-10-01
AN924-8D	28-20-01
AN924-8D	71-00-01
AN924-8D	71-00-02
AN924-8D	39-17-30
AN924-8D	39-17-20
AN924-8D	36-10-10
AN929-4	32-40-31
AN929-4	30-60-01-007
AN929-4D	34-10-01
AN929-4D	34-10-10
AN929-5D	35-00-24-051
AN929-8	36-10-10-045
AN931-1D	35-00-21-047
AN931-1D	35-00-20-040
AN931-1D	35-00-21
AN931-12-17	71-72-01-003
AN931-12-17	71-70-01-008
AN931-12-17	71-60-01
AN931-2-9	33-47-01-013
AN931-24S28	53-13-01-016
AN931-3-10	32-10-10
AN931-3-5	33-45-01-008
AN931-3-9	30-60-10-007
AN931-4-12	30-60-01
AN931-4-12	53-13-01-036
AN931-4-12	28-20-01
AN931-4-16	28-20-01
AN931-4-16	25-16-01
AN931-4-7	71-02-02
AN931-4-7	71-70-01
AN931-4-7	71-02-01
AN931-4-7	28-20-01
AN931-4-7	28-20-01
AN931-4-7	30-60-01
AN931-4-7	53-50-01
AN931-4-7	34-10-01-020A
AN931-4-7	32-40-31
AN931-4-7	32-40-31
AN931-5-12	35-00-24
AN931-5-13	35-00-20
AN931-5-9	53-16-51
AN931-5-9	21-40-01
AN931-5S13	71-62-01-069
AN931-6-10	28-20-01
AN931-6-16	28-20-01
AN931-6-16	28-20-01
AN931-6S16	71-60-01-027
AN931-9-13	24-40-01-005
AN931A4-7	28-10-10
AN931B11-16	28-20-01
AN932C2	28-20-60-011
AN935-10	28-20-50
AN935-10	39-10-01
AN935-4	33-45-01-014
AN935-4	33-46-01-015
AN935-416	76-12-01
AN935-416	71-66-01
AN935-416	76-10-01
AN935-416	76-10-01
AN935-416	76-10-01
AN935-416	76-10-01
AN935-516	24-00-01
AN935-516	53-50-20
AN935-516	53-50-10
AN935-8	21-40-60-006
AN935-8L	28-20-50
AN936A516	52-32-01

PART NUMBER	CHAP/SUB-SECT/UNIT & ITEM	PART NUMBER	CHAP/SUB-SECT/UNIT & ITEM	PART NUMBER	CHAP/SUB-SECT/UNIT & ITEM
AN936A616	76-16-01	AN960-416	32-40-10	AN960-716	28-20-01
AN936A616	76-15-01	AN960-416	25-20-01	AN960-716	28-20-01
AN936B6	24-00-01	AN960-416	21-22-01	AN960-716	71-00-03
AN936B8	21-40-60-008	AN960-416L	25-13-20-010	AN960-716	73-10-01
AN960-10	52-10-01	AN960-416L	25-13-30-007	AN960-716L	71-02-02
AN960-10	53-25-01	AN960-416L	25-13-40-007	AN960-716L	71-02-01
AN960-10	53-10-01	AN960-416L	25-20-20	AN960-716L	71-00-03
AN960-10	53-16-51	AN960-416L	32-50-01	AN960-716L	32-30-10
AN960-10	53-17-50	AN960-416L	32-40-22	AN960-8	33-45-01-005
AN960-10	53-17-52	AN960-416L	32-40-22	AN960-8	54-10-01
AN960-10	32-10-20	AN960-416L	32-20-05	AN960-8	57-10-10
AN960-10	32-10-10	AN960-416L	32-20-10	AN960-8	71-60-01
AN960-10	30-60-01	AN960-416L	39-17-10	AN960-8	71-62-01
AN960-10	32-40-30	AN960-416L	39-17-20	AN960-8	21-40-60-017
AN960-10	32-40-30	AN960-416L	39-17-30	AN960-8	21-22-40
AN960-10	21-40-60-013	AN960-516	32-10-20	AN960-816	33-40-01
AN960-10	21-40-01	AN960-516	32-40-01-004	AN960-916	36-10-10
AN960-10	21-40-01	AN960-516	32-40-02	AN960-916	73-10-01
AN960-10	21-22-10	AN960-516	32-10-10	AN960-916	73-10-01
AN960-10	21-22-20	AN960-516	30-40-10	AN960-916	30-10-01
AN960-10	71-66-01-043	AN960-516	24-00-01	AN960-916	28-20-01
AN960-10	25-22-01	AN960-516L	32-50-01	AN960A6	32-10-20
AN960-10	28-10-10	AN960-6	33-30-01	AN960A816L	32-10-20
AN960-10	27-30-01	AN960-6	32-40-30	AN960A816L	32-10-10
AN960-10L	32-30-20	AN960-6	32-40-31	AN960C416L	78-13-01
AN960-10L	32-30-10	AN960-6	54-10-01	AN960D10	32-30-10
AN960-10L	55-21-01	AN960-6	24-01-01	AN960D10L	57-50-10
AN960-10L	55-10-01	AN960-6	25-22-01	AN960D10L	32-30-10-055
AN960-10L	28-20-60-009	AN960-6	25-28-01	AN960D10L	30-60-10
AN960-10L	25-20-20	AN960-6	30-40-10-017	AN960D4	57-20-23
AN960-10L	25-13-40	AN960-6L	57-10-10	AN960D716	32-10-20-045
AN960-10L	25-13-30-010	AN960-616	32-20-05	AN960D716	32-40-31
AN960-10L	25-13-30	AN960-616	32-30-01	AN960PD10	25-10-01
AN960-10L	25-13-30-022	AN960-616	32-40-21-002	AN960PD1216	39-17-30
AN960-10L	25-13-40-010	AN960-616	25-13-10	AN960PD1716	36-10-01-019
AN960-10L	25-13-20-013	AN960-616	28-20-01	AN960PD1716	36-10-01-011
AN960-10L	25-13-20	AN960-616	27-30-01	AN960PD1716	71-02-01
AN960-10L	25-13-20-026	AN960-616L	27-30-01	AN960PD1716	71-02-01
AN960-1016	30-10-10	AN960-616L	27-50-10-036	AN960PD1716	71-02-02
AN960-1016	36-10-01	AN960-616L	76-16-01	AN960PD1716	71-02-02
AN960-1016L	27-50-01-028	AN960-616L	76-15-01	AN960PD716	34-10-10
AN960-102	76-12-01	AN960-616L	32-30-10	AN960PD716	39-17-30
AN960-1216	36-10-10	AN960-616L	32-30-10-058	AN970-3	21-40-01
AN960-1216	39-17-20	AN960-616L	32-50-01	AN970-9	61-24-01
AN960-1216L	71-00-02	AN960-617	34-10-10	AR4	27-10-01-059
AN960-1216L	28-20-01	AN960-716	32-40-31	ATC-7	33-44-01-017
AN960-1216L	73-10-01	AN960-716	32-40-31	AV1B1473	21-40-20-018
AN960-1216L	73-10-01	AN960-716	32-40-30	A086A	32-40-41-024
AN960-1416L	71-00-03	AN960-716	32-40-30	A091A	32-40-41-031
AN960-1416L	71-00-02	AN960-716	32-40-30	A10	34-10-10
AN960-1716L	30-10-30-012	AN960-716	32-40-30	A1000C10-6	71-02-01-021
AN960-3	55-40-01	AN960-716	32-40-30	A101-22	32-40-50-003
AN960-3	53-16-50	AN960-716	32-40-30	A101-353	32-40-60-010
AN960-3	32-50-10-013	AN960-716	32-40-30	A102-15	32-40-50-001
AN960-4	53-50-10-018	AN960-716	32-40-30	A102-29	32-40-60-002
AN960-4	53-50-20	AN960-716	34-10-10	A104-188	32-40-60-013
AN960-4	27-30-11	AN960-716	34-10-10	A1059-014-3	28-10-20-007
AN960-4L	53-16-51	AN960-716	32-40-30	A106-16	78-13-01
AN960-416	54-10-01	AN960-716	30-60-01	A106-502	32-40-60-007
AN960-416	54-10-01	AN960-716	30-60-01	A106B	78-13-01
AN960-416	39-17-30	AN960-716	32-10-10	A110-99	32-40-60-004
AN960-416	39-17-10	AN960-716	30-60-01	A1111	33-40-08-010
AN960-416	39-17-10	AN960-716	71-00-01	A113A	32-40-41-019
AN960-416	39-17-20	AN960-716	71-00-02	A114-176	32-40-60-017
AN960-416	39-17-20	AN960-716	39-17-20	A115-62	32-40-60-018
AN960-416	39-17-10	AN960-716	39-17-10	A116A	32-40-41-026
AN960-416	39-17-10	AN960-716	39-17-01	A117-133	32-40-60-005
AN960-416	39-17-10	AN960-716	39-17-01	A1170-2	27-20-20-053
AN960-416	39-17-10	AN960-716	39-17-01	A1170-6	53-10-01
AN960-416	32-20-10	AN960-716	39-17-01	A1170-7	27-20-20
AN960-416	32-20-05	AN960-716	28-20-01	A1170-8	27-20-20-056
AN960-416	32-40-10-003	AN960-716	28-20-01	A12	34-10-01

PART NUMBER	CHAP/SUB-SECT/UNIT & ITEM
A12	34-10-10
A1203A	32-40-41-017
A1257A	33-44-10
A1259A	32-40-61-022
A129-48	32-40-60-011
A134-9	32-40-60-006
A137A	32-40-41-029
A1384A	32-40-61-021
A139A	32-40-41-020
A14C23	21-40-01-027
A141A	32-40-41-016
A142A	32-40-41-023
A150-126	32-40-60-009
A1633-22	61-10-01-007
A1633-3	61-10-01-005
A1633-3	61-10-02-006
A1633-3	61-12-03-004
A1633-3	61-12-01-006
A1633-9	61-12-03-005
A1633-9	61-10-02-005
A1633-9	61-12-01-005
A1633-9	61-10-01-006
A1635-38	61-10-01-019
A1635-38	30-60-10-009
A1635-38	61-10-02-019
A1635-38	61-12-03-012
A1635-38	61-12-01-012
A1635-39	61-12-03-008
A1635-39	61-10-02-009
A1635-39	61-10-02-014
A1635-39	30-60-10-002
A1635-39	61-10-01-015
A1635-39	61-10-01-010
A1638-5	61-10-02
A1638-5	61-10-02
A1638-5	61-10-01
A1638-5	61-10-01
A1638-5	30-60-10
A1638-5	30-60-10
A1638-5	61-12-03
A1638-8	61-12-01
A1638-8	61-12-03
A1638-8	61-10-01
A1638-8	61-10-02
A1639-15	61-10-02
A1639-15	61-12-01
A1639-4	61-10-02-018
A1639-4	61-10-01-018
A1639-4	61-12-01-013
A1639-4	61-12-03
A164-454	32-40-60-008
A164-668	32-40-60
A164-669	32-40-60
A1783	53-51-01-009
A1783	33-40-08-009
A1784-6Z1	53-15-01-060
A1784-6Z1	53-16-51
A1815A-G7512	57-20-23
A1815A-R7512	57-20-23
A1825	57-20-22
A194-35	32-40-60-001
A2	25-23-01
A2064-1683	24-00-01
A2064-1683	53-51-01
A2108	53-51-01-005
A2109-2	53-51-01-006
A2134	33-40-08-003
A225	27-20-20-075
A2351	33-40-08-008
A2353	33-40-08-007
A2495	61-12-03-011
A2495	61-12-01-011
A2495	61-10-01-017
A2495	61-10-02-017
A2588	30-60-01
A2779-2	61-10-02-012
A2779-2	61-10-01-013
A2781-172	21-40-60-018
A2873	30-60-01-048
A2873	61-10-02-010
A2873	61-10-01-011
A2873-3	61-10-01-012
A2873-3	61-10-02-011
A2927	61-10-02-013
A2927	61-10-01-014
A2927	30-60-01-049
A3047	61-10-01-004
A3258-1	33-40-08
A3258-2	33-40-08
A3258-3	33-40-08-002
A3258-4	33-40-08
A3442-2	33-40-08-006
A35A71	21-40-01-013
A3510	53-51-01-007
A3614	30-60-01
A3649	33-40-08-004
A39070	32-40-02-010
A4-30	24-40-01-012
A4149	53-51-01-010
A4253-3	33-47-01-003
A4490-3	53-51-01-008
A4513	33-44-10-007
A4513-1	53-51-01-004
A46FC	21-22-30
A47G032	32-40-40
A47G032-1	32-40-41-012
A47G385	32-40-41-014
A47G386	32-40-41-015
A47G387	32-40-41
A47G388	32-40-41-011
A47G389	32-40-41-005
A50H011	32-40-40
A50H011	32-40-41-009
A57G104	32-40-40-018
A57G105	32-40-40-001
A57G107	32-40-40-005
A57G109	32-40-40-011
A57G111	32-40-40-017
A57G113	32-40-40-016
A57G118	32-40-40-007
A57G334	32-40-40-015
A57G336	32-40-40-010
A57G393	32-40-40
A57G394	32-40-40
A57G395	32-40-41-007
A57G395	32-40-40
A57G396	32-40-40
A57G399	32-40-40
A57G400	32-40-40
A57G400	32-40-41-001
A57G401	32-40-40
A6	32-60-01-017
A606	32-40-41-010
A6163-8Z	57-10-01
A6163-8Z	57-20-05
A6163-8Z	57-20-06
A6191-6Z	25-28-01
A6191-6Z1	53-10-01
A6191-8Z3	53-16-51
A6194-6Z1	53-20-01
A6194-8Z1	53-51-01-011
A6195-8Z2A	57-10-10
A6195-8Z3	57-20-05
A6195-8Z3	57-20-06
A6195-8Z3	53-25-01
A6416-8Z3	57-10-10
A6458	33-45-01
A6914-1024-1	57-50-01-047
A6914-1024-1	55-10-01-044
A6914-1024-1	55-11-01-038
A6914-1024-1	55-40-01
A7079B24	33-49-01-013
A7079B24	33-47-01-009
A7079B24	33-46-01-004
A7079B24	33-45-01-022
A7165-4	39-14-40-004
A7512-24	57-20-22
A7613-1	33-46-01-017
A7613-1	33-45-01-016
A7614	33-45-01-017
A7614	33-46-01-018
A7615	33-45-01-019
A7615	33-46-01-001
A7631	33-46-01-006
A7631	33-45-01-023
A7632	33-45-01-020
A7632	33-46-01-002
A7635A	33-45-01-027
A7635A	33-46-01-009
A7739	33-45-01
A779	32-50-01-013
A7942	33-45-01-026
A7942	33-46-01-005
A7942-1	33-45-01
A8	32-60-01-015
A8	34-10-10
A8	71-70-01-030
A8	71-72-01
A8107-1	33-45-01-015
A8107-1	33-46-01-016
A850-8	32-40-31
A850-8	32-40-61
A8580-6Z3	53-20-01
A8580-6Z3	53-20-01
A8580-6Z3	53-20-01
A865A1	32-40-61-014
A867A	32-40-61-024
A872-012-1	25-22-03
A889B	32-40-61-017
A8970-1-327	39-14-80-020
A8970-1-327	39-14-80-011
A8970-1-327	39-14-40
A8970-1-327	39-14-01-013
A8970-1-327	39-14-01-020
A8970-1-327	39-14-01-023
A8970-1-327	39-14-01-034
A8970-1-327	39-14-01-037
A8970-1-327	35-00-21-016
A8970-1-327	35-00-22-019
A8970-1-327	39-14-01-006
A8970-1-327	35-00-22-050
A8970-1-327	30-10-01
A8970-1-327	28-25-10-010
A8970-1-327	30-60-10-033
A8970-2-327	39-10-10
A8970-2-327	39-14-01-039
A8970-2-327	39-14-20
A8970-2-327	39-14-50
A8970B1-327	39-14-80
A8970B1-327	39-14-80
A8970B1-327	33-10-01-002
A8970B1-327	28-25-10
A8970B1-327	24-00-01-008
A8970B2-327	33-10-01
A8970B2-327	33-10-01-003
A8970B2-327	39-10-10-025

PART NUMBER	CHAP/SUB-SECT/UNIT & ITEM
A8970B2-327	33-10-01
A8970B2-327	39-14-50-027
A8970B2-327	39-14-20-024
A8970B2-327	39-14-40-003
A8970B2-375	33-10-01-005
A8975-1-327	39-14-01-040
A8975B1-327	33-10-01-004
A9-6-7	30-10-30
A905	28-20-50-023
BE348-1	36-10-01-002
BE350-1	71-02-02-021
BE350-1	30-10-30-014
BHCC2YF2CHC846 *	61-10-03
BHCC2YF2CHC84656	71-00-03
BHCC2YF2CHFFC8 *	71-02-01
BHCC2YF2CHFFC8 *	71-02-02-053
BHCC2YF2CHFFC8 *	61-10-03
BHCC2YF2CHFFC8 *	61-12-02
BHCC2YF2CHFFC8 *	71-00-03-052
BJ1000AH3D0	71-00-01
BJ1000AH3D0	71-00-02
BJ1000AH3D0	71-00-03
BJ1000AH3D0	71-70-01-032
BJ1000AH3D0	71-72-01-027
BS330865	28-10-01
BZ3AT	27-50-30-012
BZ3AT	57-20-15-081
B111745X	57-20-01-015
B112-1	76-10-01
B112-2	76-10-01
B112-5	76-10-01
B112-6	76-10-01
B113-2	76-10-01
B1416	27-20-20-020
B146	27-20-20-022
B148	27-10-20-066
B148	27-20-20-017
B148	27-20-20
B2120-501	21-22-01-024
B2120-501	21-22-01-031
B2155-501	21-22-01-030
B2368-2	30-60-01
B2848	61-10-01-016
B2857	30-60-10-005
B3242	61-10-03-009
B3242	61-12-02-013
B3264	61-12-04-013
B3264	61-10-05-011
B3275	61-10-02-015
B3275	61-10-02
B3275	30-60-10
B3281-1	30-60-10
B3281-1	61-10-02-016
B3281-1	61-12-01
B3281-2	61-12-01
B3281-2	61-10-02
B3281-2	30-60-10-004
B3307-1	33-40-08
B3307-1-1524	24-01-01-024
B3307-2	33-40-08
B3307-2-1524	24-01-01
B3307-3	33-40-08-001
B3307-3-1524	24-01-01-025
B3307-4	33-40-08
B3307-4-1524	24-01-01
B3348	30-60-10-003
B3348	61-12-03-009
B3348	61-10-02
B3348	61-10-02
B3348	61-12-01-014
B3465	61-12-01
B3465	61-10-02
B3550-1	21-22-30-005
B3550-1	21-22-10-008
B3550-1	21-22-20-003
B3555A307	33-30-01-004
B36	27-50-10-030
B3707	61-12-03-010
B3725-1	61-12-03
B3725-2	61-12-03
B40-1	32-30-10-023
B41C74	21-40-01-034
B41C74	21-40-01-076
B50795-1	32-40-30-075
B58291-1	30-10-01-055
B7605-1	33-45-01
B7605A	33-45-01-028
B7605A	33-46-01-010
B7620A	33-46-01-008
B7620A	33-45-01-025
B7640-1	33-45-01-028A
B7640-1	33-46-01-019
B78	27-10-20-021
B88X	32-30-20-030
C-3567-1P	71-00-03
CB2305A	39-14-40
CB2305A	39-14-40-017
CB2305A	39-14-50-017
CB2310A	39-14-50-016
CB2310A	39-14-40-019
CB2310A	39-14-40-018
CB2315A	39-14-40-020
CB2330A	39-14-40-021
CB2330A	39-14-40
CB2330A	39-14-50-020
CB3100C	39-14-50-014
CB3105A	39-14-40-011
CB3105A	39-14-01
CB3110A	33-45-01-030
CB3110A	39-14-40-009
CB3110C	39-14-50-025
CB3115A	39-14-40
CB3115A	30-60-10-031
CB7740-110	28-10-01
CB7740-110	28-10-01
CB7740-111	28-10-01
CB7740-112	28-10-01-013
CB7740-112	28-10-01-012
CB7740-113	28-10-01-014
CB7740-116	28-10-01-011
CCA3400	28-10-01-007
CCA4850	28-20-01
CCA4850	21-40-20-015B
CCA4850	28-10-01-004
CCA4850	28-20-01
COB53801-1	71-10-01
COB53801-2	71-10-01
COB53802-1	71-10-01
COB53802-2	71-10-01
COB53822-1	71-10-01
COB71989-1	39-14-70-006
COB71989-1	39-14-80-005
CS-A18	71-02-01
CS-A18	71-02-02
CS4000W/265-4	25-13-20-062
CS4000W/265-4	25-13-30-051
CS4000W/265-4	25-13-40-051
CS4000W/265-4	25-20-20-035
CS4000W/265-4	25-21-30-005
CS5000B3B	25-23-01
CS647	25-23-01
CS647	25-23-01
C1R10-16	25-60-01
C1R10-19	25-60-01
C1872-4	61-10-04-010
C2283	61-12-02-010
C2283	61-10-03-006
C2283	71-02-02
C2283	71-02-01
C2284-1	61-12-02-011
C2284-1	61-10-03-007
C2285-1P	61-12-02
C2285-1P	61-10-03
C2285-1P	71-00-03-053
C2285-1P	71-02-01
C2285-1P	71-02-02-054
C2400L4P1A-B	25-16-30-010
C2400L4P1A-B	25-16-20-003
C2400L4P1B	25-16-20
C316-351	33-10-01-001
C32C94	21-40-01-022
C3260-9	61-12-04-005
C3278-3	61-10-05-008
C3278-3	61-12-04-011
C3566-1	61-12-04-010
C3566-1	71-02-01
C3566-1	71-02-02
C3566-1	61-10-05-010
C3567-1P	61-12-04
C3567-1P	61-10-05
C3567-1P	71-02-02
C3567-1P	71-02-01
C37656-41	28-10-20-034
C4189	27-10-01-026
C4189	27-10-01-076
C4189	27-10-10-015
C4189	27-20-10-021
C4189	27-30-01-034
C4189	27-30-01
C4189	27-30-01-040
C4189	27-30-11-025
C4189	27-30-30
C6189	27-10-20-009
C63551-3	11-30-01
C84220-1	33-40-05
C8465-6	61-10-03
C85A82	21-40-01-001
DY1440	52-32-01
DY1499	52-32-01-004
D08431-1	57-10-21
D138-100-5T1	39-14-50-008
D165-100-2	24-00-01
D165-100-2	24-00-01
D165-100-2	25-16-20
D1976-6R	30-60-01
D1976-6R	61-10-04
D1976-8R	61-10-04-011
D2321/C39	61-10-01-001
D23217-1	57-10-21-022
D2747	30-60-10
D2747	61-10-01-009
D2747	61-10-02-008
D2793	61-10-02
D2793	61-10-01
D2801	61-10-01
D2801	30-60-01-047
D2801	61-10-02
D2801	71-02-01
D2801	61-12-01
D2870	71-02-01
D2870	61-12-01-010
D2870	61-10-02-020
D2870	61-10-01-020
D3153	61-10-02
D3153	61-12-01
D3273	61-12-01-001

PART NUMBER	CHAP/SUB-SECT/UNIT & ITEM
D3273	61-10-02-001
D3402	30-60-10-006
D3403	30-60-10
D3403	61-10-02
D3403	61-12-01
D3419	61-12-01-008
D3419	61-10-02
D3419	30-60-10-001
D3461	30-60-01
D3461	61-10-02
D3567/82NB6	61-12-03-006
D3570	61-12-03-007
D3571	71-02-01
D3571	61-12-03-013
D3571	71-02-02
D3607	30-60-01
D3607	61-12-03
D3608	61-12-03
D3608	30-60-01
D3608	71-02-01
D366	56-10-10-032
D4023X1 1/4	56-10-10-031
D4046	30-60-01
D4344/C75	61-12-03-001
D611A	25-13-10-067
D611A	25-13-20-063
D611A	25-13-30-052
D611A	25-13-40-052
D611A	25-20-10-051
D611A	25-20-20
D611A	25-21-20-025
D611A	25-21-30-004
D611A	25-23-01
D611A	25-23-01
D7080A5-24	33-46-01
D7270-5-3	27-30-30
D7270-5-3	39-14-40-024
D7270-6-10	39-10-30
D7270-6-10	39-10-30-005
D7270-6-15	39-10-30-017
D7270-6-20	39-10-30-018
D7270-6-5	39-14-50-023
D7270-6-5	39-10-30-016
D7270-6-5	39-10-30
D7271-1-20	39-14-40-025
D7271-1-20	39-14-40
D7271-1-5	39-10-30-032
D7274-2-5	30-10-10-049
D7274-2-5	30-10-20-021
D83A28	21-40-01
D9-14-1	71-02-02
D9-14-1	30-10-30-003
D9961-3	33-47-01-001
D9961-3	33-49-01-001
EB1019B10R	25-10-01
ED99A30	21-40-01-014
EF5-1	25-10-01
ELT10-158	25-60-01
ELT10-214-1	25-60-01-007
EQ5850L	71-00-01
EQ5850L	71-00-02
EQ5850L	71-00-03
EX811-61-1	30-10-10-060
E3330	71-02-01
FCA25750	28-10-01
FCA25751	28-10-01-019
FCB25722	28-10-01-015
FCB25722	28-10-01
FC7663-2R	61-12-04-006
FC8465-6	61-10-03-005
FC8475-6	61-12-02-006
FDK2707	25-21-20-024
FDK2707	25-20-10-052
FDK2707	25-13-10-068
FF520-15	28-25-10
FF520-15	28-25-10
FF520-15	28-25-10
FF520-15	28-25-10
FF520-15	28-25-10
FF520-15	28-25-10
FF520-15	28-25-10
FL608EX2	52-32-01-009
FR2 1/2	25-23-01-006
F2X2T3	21-40-20
F3M14	27-20-20-070
F312	76-16-01-009
F312	76-15-01-009
F34-14M	76-12-01-041
F34-14M	76-12-01-030
F34-14M	76-12-01-010
F34-14M	76-12-01-001
F34-14M	76-10-01-036
F34-14M	76-10-01-033
F34-14M	76-10-01-023
F34-14M	76-10-01-008
F34-14M	71-66-01-049
F4-30	71-10-01-038
F5-35	71-12-01-058
F5-35	71-10-01-050
F6100X2	52-10-01-035
F6500X0	52-10-02-051
F65000AX2	52-10-02
F6747RX2	52-35-01-011
GF5-175	71-12-01
GF5-175	71-10-01
GG5642808	28-10-01
GG5642809	28-10-01
GJ20DS	80-10-01-012
GR32	24-30-01-014
GT4738	30-10-30-092
GT4738	30-10-20-016
GT4738	30-10-10-053
G199-105	28-20-60
G199-105	28-20-01
G199-80	28-20-01-057
G199-80	28-20-60
G36A47	21-40-01-007
G371-02-2A	39-14-01
G455	71-02-01-019
G455	71-00-03-018
G455	71-00-02-018
G455	71-00-01-018
G714127	21-20-10-003
G714127	21-20-01-027
HE1114	28-20-50-020
HE1115	28-20-50-022
HE1116	28-20-50-011
HE1117	28-20-50-013
HE1153-2	28-20-50-021
HE1155	28-20-50-006
HE1156	28-20-50-016
HE1373	32-40-61-012
HE1414	28-10-20-049
HE1414	28-10-20-060
HE1417	28-10-20-045
HE1526-3	28-20-60-002
HE1526-4	28-20-60-005
HE1528-6	28-20-60-004
HE1530-5	28-20-60-001
HE1531	28-20-60-006
HE1568-2	28-20-60-003
HE1793	32-40-61-001
HE1794-1	28-10-20-038
HE1795	28-10-20-047
HE1796	28-10-20-043
HE1797	28-10-20-040
HE1798	28-10-20-039
HE1850-1	28-10-20-046
HE189	28-20-50-009
HE1900-4	32-40-61-013
HE1902	32-40-61-002
HE1903	32-40-61-003
HE1905-1	32-40-61-004
HE1906	32-40-61-005
HE191	28-20-50-017
HE192	28-20-50-018
HE193	28-20-50
HE194	28-20-50-010
HE636	52-10-01
HE636	52-10-02-006
HE642	71-00-01-034
HE642	71-00-02-031
HE642	71-00-03
HE642	71-02-01
HE651-1	28-10-20
HE651-3	28-10-20-058
HE7002-3	32-40-31-013
HE7002-3	32-40-61
HE760-5	28-20-60
HE760-5	28-20-01
HE825-1	28-20-50
HE825-2	28-20-50-005
HIS832BC100	71-62-01
HIS832BC100X200	71-60-01
HIS832BC100X200	71-60-01
HIS832BC100X200	71-60-01
HIS832BC100X200	71-60-01
HLUH	76-15-01-003
HL18PB6-5	57-10-21
HL200	32-40-60-003
HL214	32-40-50-004
HL338	32-40-60-012
HL4H	76-16-01-003
HL5	32-40-50-002
HL837	32-40-50-005
HM-6TM	27-30-01
HML4	27-10-01-047
HMXL6FG	32-30-10-037
HMX5FG	32-30-10-039
HMX5FG	32-30-10-059
HM4	32-50-01-029
HM4	32-30-01-034
HM4	27-10-01-045
HM4U	32-10-30-030
HM6FG	32-30-01-013
HS15248	25-21-20-012
HS49014	25-22-05
HS49014	25-22-05
HS49014	25-22-05
HS49014	25-22-05
H1S832BC100X200	57-10-20
H1S832BC100X200	57-20-10
H1S832BC100X200	57-10-01
H1S832BC100X200	57-10-10
H10-1032	21-40-01
H5000-032-040	71-10-01-034
H5000-032-040	71-12-01-052
H674-02A1	30-10-20
IE12G	71-00-03
IE12G	71-00-02
IE1297	30-62-01-006
IJ4-7	30-10-30-023
I0-470-L	71-00-02-001
I0-470-L	71-00-01-001
I0-470-L	71-00-03-001
I0-520C	71-02-02-001

PART NUMBER	CHAP/SUB-SECT/UNIT & ITEM	PART NUMBER	CHAP/SUB-SECT/UNIT & ITEM	PART NUMBER	CHAP/SUB-SECT/UNIT & ITEM
I0-520C	71-02-01-001	MF1000-08	57-20-22	MS20270B8	28-25-10-004
JV20	32-60-01-003	MF1000-08	57-20-22	MS20292-1C17	27-10-01
JV20	76-15-01-044	MF1000-3	27-30-30	MS20364-1032	53-10-01
JV5	76-16-01-056	MHJ2147	80-10-01-001	MS20364-428	32-50-01
JV5	32-60-01-006	MHJ4002	71-02-01	MS20364-428	32-50-01
J20125-03	21-22-40-014	MHJ4002	80-10-01	MS20365-1032	71-66-01-044
J41C74	21-40-01	MHJ4002	71-02-02-006	MS20365-1032	71-02-02
KM713-16-064	25-60-01-001	MHJ4003	71-02-02	MS20365-1032	53-17-50
KP3A	55-11-01	MHJ4003	71-02-01	MS20365-1032	53-25-01
KP3A	55-10-01	MHJ4003	71-00-03	MS20365-1032	32-40-30
KP4A	27-20-20-076	MHJ4003	71-00-01-007	MS20365-1032	32-40-30
KR6903	53-25-01	MHJ4003	71-00-02	MS20365-1032	25-13-20-017
K1000-3	28-10-20	MHJ4003	80-10-01	MS20365-1032	25-13-20-024
K1000-3BC	25-22-05	MK1000-832	71-60-01	MS20365-1032	25-13-20-030
K1000-3BC	25-22-05	MK1031-832	57-10-20	MS20365-1032	25-13-30-014
K1000-3BC	25-22-05	MK2000-06	52-10-01	MS20365-1032	25-13-40-014
K1000-3BC	25-22-05	MK2031-832	57-10-20	MS20365-1032	25-13-30
K1000-832	57-20-10	MK3000-08	27-20-10	MS20365-1032	25-22-01-101
K1000-832	57-20-10	ML1002	80-10-01-005	MS20365-1032	21-22-20
K102B4-5	21-40-60-016	ML18A	80-10-01-007	MS20365-1032	21-22-10
K1100-832	57-20-05	MODEL 136	39-10-01	MS20365-1032	25-20-20-010
K129-4	21-40-60-028	MODEL 136	39-14-40	MS20365-1032	25-20-10
K21B	32-30-20-022	MODEL 136	78-12-01-022	MS20365-1032	25-20-10
K271-200SSL	21-40-60-025	MST105D	27-30-30-026	MS20365-1032	25-13-40
K271-38SSL	21-40-60-029	MS15001-2	32-30-01-026	MS20365-1032C	76-12-01
K323-4-6	21-40-60-034	MS15001-3	57-10-21-045	MS20365-428	32-40-10
LBA27492	25-23-01-052	MS15001-4	57-10-30-007	MS20365-428	32-40-22
LC-C6	57-10-30	MS15001-4	32-50-01-031	MS20365-428	32-10-20-010
LC-C6	54-10-01	MS15001-4	32-50-01-034	MS20365-440	53-16-51
LC-C8	53-18-01	MS15001-4	57-10-20-043	MS20365-440	27-30-11
LC-C8	53-18-01	MS15002-1	32-30-10-006	MS20365-524	32-40-02
LHA30882	25-23-01-051	MS15002-1	32-30-10-010	MS20365-624	32-30-01
LM67010XL	32-40-10-009	MS15002-1	32-20-10-048	MS20365-632	33-30-01
LM67010XL	32-40-10-006	MS15002-1	32-20-10-013	MS20365-632	32-40-31
LM67048XL	32-40-10-001	MS15002-1	32-20-10-022	MS20365-632	32-40-30
LOT6A10	71-02-02-044	MS15002-1	32-10-10-036	MS20365-632	32-10-20
LOT6A10	71-02-01-039	MS15002-1	32-10-20-027	MS20365-632	30-40-10-018
LP4-20AM	32-40-22-010	MS15002-1	32-20-05	MS20365-832	71-60-01
LP507-10-32	33-49-01-010	MS15002-1	32-20-05	MS20365-832	33-45-01-006
LS4	32-50-01	MS15002-3	32-10-10-018	MS20392-IC23	53-15-01
LS4	32-50-01-020	MS16624-1043	32-30-20-034	MS20392-1C13	53-52-03-015
LS6	32-30-01-007	MS16625-1187	32-20-05-040	MS20392-1C17	27-10-01
LU27054	25-23-01-053	MS171498	25-20-20-017	MS20392-1C17	27-10-01
LWA29455	25-23-01-054	MS171498	25-20-10-030	MS20392-1C17	27-10-01-023
L18366-1	21-22-20-024	MS171498	25-20-10-028	MS20392-1C19	27-10-01
L18366-1	21-22-20-005	MS171499	25-13-40-029	MS20392-1C19	27-10-01
L18366-1	21-22-10-003	MS171499	25-20-20-025	MS20392-1C23	27-10-01
L18366-1	21-22-30-015	MS171499	25-13-20-038	MS20392-1C23	27-10-01
L18366-1	21-22-30-003	MS171499	25-13-10-014	MS20392-1C23	27-20-01-012
L18366-1	21-22-20-026	MS171500	25-20-10-029	MS20392-1C27	27-10-01-022
L18366-3	21-22-40-004	MS171505	25-23-01	MS20392-1C35	27-10-01
L18366-3	27-10-20-029	MS171505	25-23-01	MS20392-2C29	32-30-10
L18366-3	21-22-40	MS171505	25-23-01	MS20392-20	21-40-01-049
L18366-5	27-10-20	MS171505	25-23-01	MS20392-5-81	25-13-10-009
MCI106-150	78-13-01	MS171530	25-13-10-015	MS20392-5-93	25-13-10-010
MCI106-200	78-13-01-007	MS171532	25-13-30-028	MS20426DD6-6	32-40-01-010
MCI106-53	78-12-01-021	MS171532	25-21-30	MS20427F4-5	32-40-21
MCI106-53	78-13-01	MS171532	25-20-20-021	MS20813-1	32-20-10-041
MCL2136	80-10-01-006	MS171539	25-13-10-016	MS20813-1	32-20-20-053
MCL2136A	80-10-01	MS171539	25-13-40-026	MS20813-1	32-20-05-035
MCO D54353-1	21-22-30	MS171539	25-20-20-027	MS20813-1	32-10-20-032
MCOB50635-3	39-14-01	MS17821-1-9	25-60-01	MS20813-1	32-10-10
MC2711	32-10-10-069	MS17821-3-9	30-62-01	MS20822-10D	30-10-20-059
MC2711	32-10-20-068	MS17821-3-9	30-64-01	MS20822-10D	71-00-02-029
MDL1005FS	80-10-01-003	MS18034-1	25-60-01	MS20822-10D	71-00-03-029
MDL2012E5	80-10-01-002	MS18034-4	24-01-01	MS20822-4	32-40-30-014
MDL3	39-14-40	MS20074-03-10	21-40-60-012	MS20822-4	32-40-30
MDL3	24-00-01	MS20201KP3A	27-20-10-018	MS20822-4	32-40-30-064
MD1064ES	80-10-01-008	MS20201KP6A	27-20-10-014	MS20822-4	32-40-31-023
MD46-15	32-50-01-005	MS20201KP6A	27-30-30-010	MS20822-4	32-40-31-022
MEX2092AS	80-10-01	MS20253-2-500	71-64-01	MS20822-4-4D	39-17-10-015
MEX2092S	80-10-01-004	MS20253-2-500	71-64-01-006	MS20822-4D	71-02-02-046

PART NUMBER	CHAP/SUB-SECT/UNIT & ITEM	PART NUMBER	CHAP/SUB-SECT/UNIT & ITEM	PART NUMBER	CHAP/SUB-SECT/UNIT & ITEM
MS20822-4D	71-02-01-041	MS21104D6	27-10-20	MS21919DG8	71-00-03-040
MS20822-4D	32-40-31-031	MS21104D8	76-12-01-022	MS21919DG8	71-00-03-049
MS20822-4D	32-40-31-017	MS21251B2L	27-20-01-016	MS21919DG8	71-02-01
MS20822-4D	32-40-31-054	MS21251B2L	27-30-01-003	MS21919DG8	71-02-01-032
MS20822-5D	35-00-23	MS21251B2S	27-10-01-024	MS21919DG8	71-02-01
MS20822-5D	35-00-22-029	MS21251B5L	27-20-01-015	MS21919DG8	71-02-02
MS20822-5D	35-00-22-025	MS21251B5L	27-10-01-009	MS21919DG8	71-02-02-037
MS20822-5D	35-00-21-025	MS21251B5L	27-30-01-028	MS21919DG8	71-02-02
MS20822-51	35-00-21-021	MS21252-3LS	52-10-02-070	MS21919DG8	71-00-02-040
MS20822-8	30-10-10	MS21252-3RS	52-10-02-069	MS21919DG8	71-72-01-026
MS20823-4	32-40-31	MS21256-2	27-10-01	MS21919DG8	71-72-01-018
MS20823-4	32-40-30-063	MS21256-2	27-20-01	MS21919DG8	71-70-01-020
MS20823-4D	32-40-31-018	MS21260L4RH	27-10-01-015	MS21919DG8	71-12-01
MS20823-4D	35-00-22-044	MS21260S2LH	27-10-01-030	MS21919DG8	76-12-01-019
MS20823-5D	35-00-22-049	MS21260S2RH	27-10-01-080	MS21919DG8	76-10-01-027
MS20825-4D	34-10-01-037	MS21260S2RH	27-10-10-019	MS21919DG8	73-10-01-007
MS20826-5D	35-00-22-064	MS21260S2RH	27-20-10-023	MS21919DG8	27-50-01-022
MS20826-5D	35-00-23-004	MS21260S2RH	27-20-01	MS21919DG8	27-50-01-023
MS20826-5D	35-00-24-050	MS21266-1N	55-40-01-008	MS21919DG8	27-50-01-021
MS20826-5D	35-00-24-030	MS21266-2N	53-18-01	MS21919DG8	32-10-10
MS20913-1D	35-00-22	MS2191DG5	53-52-03-013	MS21919D6-10//U/	76-10-01-039
MS21042-3	25-10-01	MS21919-DG8	73-12-01-008	MS21919D64	71-72-01
MS21042L08	54-10-01	MS21919-DG8	73-12-01	MS21919G3	76-12-01-044
MS21042L3	32-30-10	MS21919-G4	32-40-30	MS21919G4	32-40-31-038
MS21042L3	53-17-01	MS21919-G4	32-40-30	MS21919G5	24-01-01-023
MS21042L3	53-17-50	MS21919-G4	32-40-30	MS21919WDG3	30-60-10-011
MS21042L3	53-17-02	MS21919-G4	32-40-30	MS21919WDG4	30-60-10-012
MS21042L3	53-17-52	MS21919-10	28-20-01	MS24510-3	27-30-30-025
MS21042L3	53-17-50	MS21919-6	32-10-10-055	MS24621-19	53-20-01
MS21042L3	53-17-52	MS21919DG10	30-10-30-019	MS24665-130	52-20-01
MS21042L5	32-30-10	MS21919DG10	76-10-01-006	MS24665-130	32-10-20
MS21044N04	57-20-23	MS21919DG10	76-12-01-021	MS24665-130	21-40-01
MS21047L06	54-10-01	MS21919DG10	76-12-01-035	MS24665-132	21-40-01
MS21047L06	57-20-15	MS21919DG10	76-12-01	MS24665-132	27-10-01
MS21047L08	57-20-06	MS21919DG10	36-10-01-023	MS24665-132	27-10-01
MS21047L08	57-20-06	MS21919DG11	71-02-01	MS24665-132	27-10-01
MS21047L08	57-20-06	MS21919DG11	71-02-02	MS24665-132	27-10-01
MS21047L08	57-20-06	MS21919DG11	71-02-02-035	MS24665-132	27-10-01
MS21047L08	57-10-21	MS21919DG11	71-02-01-030	MS24665-132	27-10-01
MS21047L08	54-10-01	MS21919DG12	71-72-01-008	MS24665-132	27-10-01
MS21047L08	54-10-01	MS21919DG12	71-70-01-012	MS24665-132	28-10-20
MS21047L08	25-60-01	MS21919DG12	76-10-01-029	MS24665-132	32-30-10-056
MS21047L08	25-60-01	MS21919DG12	30-10-30-010	MS24665-132	32-50-01
MS21047L08K	54-10-01	MS21919DG13	24-01-01-019	MS24665-132	52-20-01
MS21047L3	57-20-20	MS21919DG15	24-01-01-021	MS24665-132	53-15-01
MS21047L3	53-15-01	MS21919DG16	76-10-01	MS24665-132	53-52-03
MS21047L3	53-17-02	MS21919DG17	28-20-01	MS24665-132	57-50-10
MS21047L4	53-15-01	MS21919DG17	28-10-01	MS24665-134	32-50-01
MS21049L08	57-20-06	MS21919DG2	27-10-20	MS24665-134	27-30-01
MS21049L08	57-20-06	MS21919DG21	36-10-01-004	MS24665-134	21-40-60-004
MS21049L08	53-11-01	MS21919DG3	27-10-20-036	MS24665-138	32-30-30-016
MS21051-3	57-10-21	MS21919DG3	24-00-01	MS24665-281	32-50-10
MS21051-4K	25-23-01-012	MS21919DG36	71-72-01-007	MS24665-359	32-20-01
MS21051L06	54-10-01	MS21919DG36	71-70-01-011	MS24665-7	27-50-20
MS21051L08	57-20-15	MS21919DG36	71-64-01-028	MS24693S1	57-20-23-045
MS21051L3	57-20-20	MS21919DG4	71-00-02-024	MS24693S50	55-10-01-057
MS21051L3	54-10-01	MS21919DG4	71-00-03-024	MS24694S50	53-17-52
MS21051L3	57-20-21	MS21919DG4	24-00-01	MS24694S51	53-17-52
MS21059L08	57-20-12	MS21919DG4	32-40-30	MS24694S51	32-30-10-009A
MS21059L08K	57-20-10	MS21919DG4	32-40-31-060	MS25010-3A	39-10-30-061
MS21059L08K	57-20-12	MS21919DG5	35-00-24-039	MS25010-3A	39-10-30-021
MS21061L4	57-10-21	MS21919DG5	35-00-24-018	MS25010-3A	39-14-40
MS21070L06K	57-20-23-031	MS21919DG5	53-52-03-016	MS25010-3A	39-14-40
MS21070L08K	57-20-23	MS21919DG50	36-10-01-028	MS25026-1	57-20-15-080
MS21071L06	57-20-21	MS21919DG50	30-10-30-024	MS25026-1	57-20-15
MS21071L06	57-20-20	MS21919DG6	76-10-01-028	MS25026-1	57-20-15
MS21071L08K	57-20-23	MS21919DG6	76-10-01-026	MS25026-1	27-50-30-011
MS21073L04K	57-20-23-023	MS21919DG6	76-12-01-015	MS25026-1	32-10-20-069
MS21073L08K	57-20-23-024	MS21919DG6	76-10-01-030	MS25026-1	32-10-10-068
MS21103-16	76-12-01	MS21919DG7	71-00-01	MS25026-1	21-40-01-060
MS21104D4	76-12-01	MS21919DG7	71-00-02	MS25036-3	33-45-01-007
MS21104D6	76-12-01	MS21919DG7	71-00-03	MS25036-7	30-60-10-014

PART NUMBER	CHAP/SUB-SECT/UNIT & ITEM
MS25083-1AA6	24-01-01-014
MS25083-1AA8	24-01-01-015
MS25083-1BA6	24-01-01-026
MS25083-1BB6	57-50-01-045
MS25083-2AA4	55-00-02-013
MS25083-2AA4	55-00-01-013
MS25083-2AA4	55-20-01
MS25083-2AA6	57-20-15
MS25083-2AA6	57-50-01
MS25083-2AA8	57-20-15-025
MS25083-2BB6	57-20-15-032
MS25083-2BB6	57-50-01
MS25083-2BC6	54-10-01
MS25171-15	27-50-30
MS25171-2S	21-40-20-017A
MS25171-4S	24-00-01
MS25201-4	27-50-20-051
MS25226-4-4	39-14-70
MS25231-313	25-16-30
MS25253-2	76-16-01-057
MS25318-1	33-48-01-003
MS27039-0814	54-10-01
MS27039-1-20	53-17-50
MS27039-1-20	53-17-52
MS27261KSP4	55-00-01
MS27261KSP4	55-00-02
MS27640-3A	27-10-20-064
MS27640-3A	27-10-20-073
MS27640-3A	27-10-20-076
MS27641-10	27-10-20-022
MS27641-10	27-10-20
MS28034-1	71-00-01-015
MS28034-1	71-00-02-015
MS28034-1	71-02-02-013
MS28034-1	71-02-01-014
MS28034-1	71-00-03-015
MS28714-8-0184	73-10-01-002
MS28741-10-0201	30-10-10-039
MS28741-10-0325	30-10-10
MS28741-4-0084	32-40-30-012
MS28741-4-0100	71-00-02
MS28741-4-0100	71-00-01-024
MS28741-4-0107	32-40-31-020
MS28741-4-0107	32-40-30-059
MS28741-4-0107	32-40-30-060
MS28741-4-0110	71-00-02
MS28741-4-0120	32-40-30-061
MS28741-4-0120	32-40-31-020A
MS28741-4-0125	32-10-10-047
MS28741-4-0126	32-40-31-019
MS28741-4-0126	32-40-30-058
MS28741-4-0126	71-02-01-043
MS28741-4-0126	71-02-01
MS28741-4-0126	71-02-02-048
MS28741-4-0140	32-10-20-047
MS28741-4-0152	73-10-01
MS28741-4-0152	32-40-31-011
MS28741-4-0152	32-40-30-015
MS28741-4-0153	32-10-10-048
MS28741-4-0154	73-12-01-005
MS28741-4-0156	73-10-01
MS28741-4-0156	32-40-31-012
MS28741-4-0156	32-40-30-016
MS28741-4-0160	32-40-31-046
MS28741-4-0160	73-12-01-003
MS28741-4-0160	28-20-01
MS28741-4-0160	32-10-20
MS28741-4-0170	32-10-20-043
MS28741-4-0170	30-60-01-039
MS28741-4-0170	73-12-01
MS28741-4-0170	32-40-31-042
MS28741-4-0180	71-02-02
MS28741-4-0180	30-60-01-041
MS28741-4-0200	73-10-01
MS28741-4-0200	71-00-03
MS28741-4-0200	71-00-01-044
MS28741-4-0220	73-12-01-006
MS28741-4-0222	73-10-01-001
MS28741-4-0222	28-20-01
MS28741-4-0222	71-00-01-047
MS28741-4-0222	71-00-02-050
MS28741-4-0222	71-00-03
MS28741-4-023D	30-10-01-046
MS28741-4-0234	28-20-01
MS28741-4-0234	73-10-01
MS28741-4-0234	71-00-01
MS28741-4-0250	71-00-01
MS28741-4-0250	73-10-01
MS28741-4-0250	73-12-01
MS28741-4-0250	28-20-01
MS28741-4-0250	28-20-01-063
MS28741-4-0250	30-10-10-045
MS28741-4-0260	71-00-02-039
MS28741-4-0260	71-00-03-039
MS28741-4-0376	73-10-01-006
MS28741-4-0396	73-12-01-007
MS28741-4-0396	71-00-03-050
MS28741-4-0410	73-12-01
MS28741-4-200	71-00-02-048
MS28741-4-376	71-00-03-048
MS28741-6-0110	30-10-10-044
MS28741-6-0140	28-20-01
MS28741-6-0140	73-10-01
MS28741-6-0140	71-00-01
MS28741-6-0184	71-00-01-046
MS28741-6-0184	71-00-02
MS28741-6-0184	73-10-01
MS28741-6-0184	28-20-01
MS28741-6-0230	28-20-01-062
MS28741-6-0230	73-10-01
MS28741-6-0230	71-00-01
MS28741-8-0110	30-10-10
MS28741-8-0184	71-00-02-051
MS28741-8-0184	71-00-03-051
MS28741-8-0201	71-00-01-042
MS28741-8-0201	71-00-02
MS28741-8-0385	71-00-02
MS28741-8-0385	71-00-01
S MS28741F6-0315	61-24-01-011
MS28775-008	32-40-41-022
MS28775-010	32-40-61-016
MS28775-011	32-40-41-027
MS28775-012	32-40-61-023
MS28775-025	32-20-20
MS28775-113	32-40-41-021
MS28775-138	32-10-20-007
MS28776-20	32-10-10-041
MS28776R2-19	32-20-05-021
MS28778-5	32-20-05
MS28778-5	32-10-20-033
MS28778-5	32-10-10
MS28778-5	32-20-10-039
MS28778-6	32-40-21-014
MS28778-6	32-40-20
MS28778-6	32-10-20
MS28778-8	30-10-30
MS29512-4	28-20-50-028
MS29512-6	28-20-50-026
MS29512-6	28-20-01
MS29512-6	28-20-01
MS29512-6	28-20-01
MS29512-8	28-20-01
MS29512-8	28-20-01
MS29513-10	28-20-50-012
MS29513-10	28-10-20-021
MS29513-10	28-10-20-010
MS29513-11	28-10-20-042
MS29513-12	28-20-50-019
MS29513-136	28-20-50-015
MS29513-232	28-10-20-012
MS29513-338	28-10-20-022
MS29513-338	28-10-20-044
MS29523-1	28-10-20-057
MS3054-4	30-62-01
MS3057-12A	30-62-01
MS3057-12A	30-64-01
MS3057-4	30-64-01
MS3102A10SL3P	30-64-01-017
MS3102A105L3P	30-62-01-018
MS3102E1CSL3P	21-40-01-032
MS3106-10SL3S	30-64-01
MS3106-10SL3S	30-62-01
MS3106-10SL3S	30-60-10-030
MS3106-14S5S	24-00-01-034
MS3106-14S7S	30-10-30
MS3106A10SL3S	24-00-01-033
MS3106A10SL3S	24-01-01-002
MS3106A12S3S	24-01-01-001
MS3106A14S1S	24-00-01-012
MS3106A18-1S	24-00-01-019
MS3106A20-15S	30-62-01
MS3106A20-15S	30-64-01
MS3108B10SL3S	24-01-01
MS3108B12S3S	24-01-01
MS316R12S3S	30-10-20-067
MS3367-1-9	36-10-01-040
MS3367-1-9	30-10-20
MS35058-27	30-10-10-051
MS35206-237	27-50-30-014
MS35206-238	27-50-30
MS35207-282	54-10-01
MS35223-27	33-49-01-012
MS35223-28	33-46-01-012
MS35223-28	33-45-01-011
MS35333-37	30-62-01
MS35333-37	30-64-01
MS35333-73	33-49-01-011
MS35335-32	30-60-10
MS35338-40	33-45-01
MS35338-44	54-10-01
MS35489-10	35-00-22-057
MS35489-11	21-40-01
MS35489-11	57-10-10
MS35489-11	53-11-01
MS35489-11	53-10-01
MS35489-14S	36-10-10
MS35489-14S	34-10-10-010
MS35489-15	30-10-20
MS35489-16	36-10-01-050
MS35489-16	71-00-03
MS35489-16	73-10-01
MS35489-16	73-12-01
MS35489-16S	32-60-01
MS35489-17	27-50-01-019
MS35489-17	30-10-20-070
MS35489-17	30-10-30-038
MS35489-17	57-10-10
MS35489-19	53-10-01-053
MS35489-19	53-11-01
MS35489-19	53-11-01
MS35489-19	53-11-01
MS35489-19	53-11-01-079
MS35489-19	53-11-01
MS35489-23	53-11-01-078
MS35489-35	27-10-20
MS35489-4	24-01-01

PART NUMBER	CHAP/SUB-SECT/UNIT & ITEM	PART NUMBER	CHAP/SUB-SECT/UNIT & ITEM	PART NUMBER	CHAP/SUB-SECT/UNIT & ITEM
MS35489-4	35-00-22-003	NAS1025N0SK	71-60-01	NAS1486-17	57-10-21
MS35489-40	27-10-20	NAS1031-AD8	33-44-01	NAS1486-17	57-10-21
MS35489-43	53-11-01	NAS1031A3	39-10-20	NAS1486-18	57-10-21
MS35489-43	53-11-01	NAS1068A3	39-10-20	NAS1486-18	57-10-20
MS35489-5	32-10-20	NAS1080-6	57-10-20	NAS1486-19	57-10-20
MS35489-6	30-10-30-039	NAS1080-6	57-10-21	NAS1486-19	57-10-21
MS35489-6	28-10-10	NAS1080-6	57-10-20	NAS1486-20	57-10-21
MS35489-6	28-20-01	NAS1080-6	57-10-20	NAS1486-20	57-10-20
MS35489-6	30-10-20-054	NAS1080-6	57-10-21	NAS221	21-40-01-059
MS35489-6	28-20-01	NAS1080-6	57-10-21	NAS221-1032	53-17-50
MS35489-6	28-20-01	NAS1080C6	53-17-02	NAS221-20	53-17-02
MS35489-6	53-11-01	NAS1080C6	53-17-52	NAS221-20	53-17-01
MS35489-6	57-10-10	NAS1080C8	53-17-52	NAS222-16	32-20-10-035
MS35489-6	57-10-10	NAS1080C8	53-17-02	NAS222-17	32-20-10
MS35489-6	57-10-20	NAS1081-4A12	32-20-01	NAS287-25-2	27-10-01-029
MS35489-6	57-10-21	NAS1103-4D	57-50-10-046	NAS287-25-2	27-10-01-079
MS35489-6	57-10-21	NAS1201B10	28-10-20-059	NAS287-25-2	27-10-10-018
MS35489-6	57-20-05	NAS1329A06K75	25-16-10	NAS287-25-2	27-20-10-024
MS35489-6	57-10-10	NAS1329A08K75	53-18-01	NAS287-25-2	27-20-01-032
MS35489-6	71-12-01	NAS1334S6S10D	53-50-10-015	NAS302-77-3827	27-20-15-007
MS35489-6	71-70-01	NAS1334S6S10D	53-50-20-013	NAS304-35-0564	27-30-01-001
MS35489-6	71-72-01-014	NAS1334S6S10D	53-10-01	NAS304-44-3507	27-30-01
MS35489-6S	21-40-01	NAS1334S6S10D	53-11-01	NAS304-44-3511	27-30-01-054
MS35489-65	33-44-01-005	NAS1426-10	53-17-02	NAS305-34-0652	27-10-01-050
MS35489-7	28-20-01	NAS1426-5	53-17-52	NAS305-34-1594	27-20-01-002
MS35489-7	21-40-20	NAS1426-8	53-17-02	NAS305-34-1600	27-20-01-001
MS35489-7S	34-10-10-012	NAS1426-8	53-17-01	NAS305-35-0672	27-10-01-051
MS35489-7S	36-10-10	NAS1426-9	53-17-02	NAS305-55-1043	27-10-01-016
MS35489-8	21-40-20	NAS1428-10	53-17-01	NAS312-37-0302	27-30-01
MS35489-9	21-22-20-009	NAS1428-10	53-17-50	NAS312-37-0323	27-30-01-021
MS35489-9	21-22-30-009	NAS1428-10	53-17-52	NAS312-37-0843	27-30-30-016
MS35490-5	21-22-40	NAS1428-11	53-17-02	NAS334CPA30	32-10-20-008
MS35490-8	30-40-01	NAS1428-12	53-17-01	NAS384-10P	25-22-01
MS35649-265T	54-10-01	NAS1428-7	53-17-01	NAS384-6-12P	33-44-01
MS35649-65	30-64-01-015	NAS1428-7	53-17-02	NAS387-832-8P	53-16-51
MS35649-65	30-62-01-015	NAS1428-7	53-17-52	NAS395-6-1	25-28-01
MS51021-42	27-50-01	NAS1428-7	53-17-50	NAS395-6-3	53-20-01
MS9021-017	71-02-02	NAS1428-8	53-17-52	NAS397-18	71-70-01-005
MS9021-017	71-02-01	NAS1428-9	53-17-52	NAS42HT3-28	27-30-11
MS9021-038	71-02-02	NAS1428-9	53-17-50	NAS427K11	27-30-01-061
MS9021-038	71-02-01	NAS1428-9	53-17-01	NAS427K11	27-20-01-009
MS9021-110	28-10-20-032	NAS1455C8-16C	52-32-01-016	NAS427K11	27-20-01-028
MS9048-065	32-60-01	NAS1466-10	57-10-21	NAS427K12	27-20-01
MS9048-068	27-30-11-004	NAS1466-10	57-10-20	NAS427K14	27-10-01
MS9048-070	27-30-11-002	NAS1466-12	57-10-20	NAS427K21	27-30-01-025
MS91586-1	24-01-01	NAS1466-12	57-10-21	NAS427K22	27-30-01-032
MS91586-1	24-00-01-014	NAS1466-13	57-10-21	NAS428H-4-14	53-18-01-099
MS91586-1	30-62-01-002	NAS1466-13	57-10-20	NAS43DD3	21-40-01
MS91586-1	30-64-01-002	NAS1466-4	57-10-20	NAS43DD3-32	73-10-01
MS91586-2	24-00-01	NAS1466-4	57-10-21	NAS43DD3-32	71-00-02
MS91586-2	24-01-01-011	NAS1466-4	57-10-21	NAS444-2-1	53-17-01
MZ19S	80-10-01-009	NAS1466-5	57-10-20	NAS447-10SP	76-15-01
M1-672	31-30-01-003	NAS1486-11	57-10-20	NAS447-10SP	76-16-01
M1-672	39-14-01-019	NAS1486-11	57-10-21	NAS451-43	39-14-60-015
M1-986	39-14-01-018	NAS1486-12	57-10-21	NAS451-7	25-22-01
M1-990	31-30-01	NAS1486-12	57-10-20	NAS451-7	25-22-01
M1-990	39-14-01-021	NAS1486-13	57-10-20	NAS451-8	39-14-50
M1779	71-00-01-029	NAS1486-13	57-10-21	NAS50-112	27-50-01-006
M1779	71-00-02-045	NAS1486-14	57-10-21	NAS50-187	32-20-10-054
M1779	71-00-03-045	NAS1486-14	57-10-21	NAS50-262	32-10-10-027
M1779	71-02-01-017	NAS1486-14	57-10-20	NAS50-87	32-50-01-028
M1779	71-02-02-016	NAS1486-14	57-10-20	NAS50-87	27-30-11-013
M1986	39-10-10	NAS1486-15	57-10-20	NAS50-87	27-10-10-007
M2005M2	25-23-01	NAS1486-15	57-10-20	NAS50-93	32-50-10-009
M2005M2	25-23-01	NAS1486-15	57-10-21	NAS505-3	57-20-15-031
M2916V	21-40-60	NAS1486-15	57-10-21	NAS505-3	57-20-15-024
M4006	31-30-01	NAS1486-16	57-10-21	NAS505-3J	55-30-01-023
M471X	32-30-20-035	NAS1486-16	57-10-21	NAS505-3J	55-30-01-020
NAF1127-18	25-22-03	NAS1486-16	57-10-20	NAS505-4J	55-30-01
NAJ1-82C	57-10-10	NAS1486-16	57-10-20	NAS505-4J	55-30-01
NAS1024A08	57-10-10	NAS1486-17	57-10-20	NAS505-4J	32-20-20-060
NAS1025A3K	71-62-01	NAS1486-17	57-10-20	NAS505-4J	32-20-05-036

PART NUMBER	CHAP/SUB-SECT/UNIT & ITEM
NAS505-4J	32-20-10-034
NAS51-131	32-30-20-041
NAS51-131	32-30-20-043
NAS51-18N	52-20-01
NAS51-31	32-10-10-075
NAS51-31	32-10-20-075
NAS516-1	32-50-01
NAS561PF4-15	27-30-30-007
NAS679A3	57-10-21
NAS680-1032	53-11-01
NAS680A06	53-15-01
NAS680A06	57-20-10
NAS680A06	57-20-05
NAS680A06	57-20-06
NAS680A08K	57-10-10
NAS680A08K	57-10-10
NAS680A08K	57-10-10
NAS680A3	55-11-01
NAS680A3	57-10-10
NAS680A3	53-12-01
NAS680A3	53-10-01
NAS680A3	53-10-01
NAS680A3	71-62-01
NAS680A3	71-62-01
NAS680A3	28-10-20
NAS680A3	28-10-20
NAS696A06	39-14-60
NAS696A08	55-21-01
NAS696A3	55-10-01
NAS697A06	27-50-20
NAS697A06	27-50-20
NAS697A06	27-50-20
NAS697A06	76-16-01-052
NAS697A08	55-21-01
NAS697A08	52-10-01
NAS697A08	57-10-10
NAS697A3	55-10-01-009
NAS697C08M	57-10-10
NAS697C08M	57-10-10
NAS72-5-011	32-30-10-012
NAS75-8-104	32-30-10
NAS76A7-020	32-50-01-043
NAS77-4-45	27-30-01
NAS77-4-97	55-20-01
NAS77A6-35	25-23-01
NAS77A6-35	25-23-01
NAS77A6-35	25-23-01
NAS77A6-35	25-23-01
NAS77A9-12	53-12-01-014
NAS774-97	55-21-01
NDR4A	27-50-10-029
ND77R4	27-50-10-011
NO NUMBER	32-50-01
NO.5	39-10-20-027
NO.678	33-44-10-014
N5000-81MD	32-40-41-028
N507-90-006	32-40-61-020
N5100-37MD	32-40-61-018
OT536	35-00-21-054
PF3001-2	35-00-22-047
PHC-AXF2B/V763 *	30-60-01
PHC-A3VF2B/V76 *	30-60-01
PHC-A3XF2B/7636D	30-60-01
PHCA3VFBV7636D	71-00-02
PHCA3VF2BF7636D	61-10-04
PHCA3VF2BF7636DB	61-10-04
PHCA3VF2BF7636DB	71-00-02
PHCA3VF2BV7636D	71-00-03
PHCA3YF2BF7636DB	71-00-03
PHCCYF2C78832R *	71-00-03
PHCC3YF2C76632R	61-10-05
PHCC3YF2FFC766 *	61-10-05
PHCC3YF2FFC766 *	61-12-04
PHCC3YF2FFC766 *	71-02-01
PHCC3YF2FFC766 *	71-02-02
PHCC3YF2FFC766 *	71-00-03
PK79XZ6-6	53-16-50
PK79XZ6-6	53-16-51
PM7	39-14-20
PRP909-6	61-10-03-004
PRP909-6	61-10-05-004
PSM15N	39-10-30-034
PSM3N	39-10-30-030
PSM3N	39-14-40-023
PSM30N	39-10-30-033
PSM5N	39-10-30-031
P22A2	24-30-20
P22B2N	24-30-20
P5	21-22-40-005
P6V3	21-22-01
P90-2006	80-10-01-013
P90-201/A/	24-30-01-004
P90-2043	24-30-01-013
P90-818	24-30-01-017
P90-842	80-10-01-010
R-903	25-10-01
RA1039C	21-40-01
RA1039C	76-12-01-036
RA1039C	76-12-01-017
RA1039C	76-10-01-013
RA4000	53-11-01
RC07GF302J	39-10-20-015
RC07GF302J	24-00-01
RC07GF471J	24-00-01
RC07GF471J	39-10-20-014
RC20GF432J	27-50-20-019
RC20GF432J	27-50-20-033
RC32GF511K	24-00-01
RC42GF151K	24-00-01
RC42GF361J	27-50-20-021
RC42GF361J	27-50-20-035
RE3S7	27-20-20-067
RHB32N	71-02-01-010
RHB32N	71-02-02-010
RHB36P	71-02-01
RHB36P	71-02-02
RHB36W	71-00-03-004
RHB36W	71-00-02-004
RHB36W	71-00-01-004
RRN-237C	32-10-20-004
RRN237C	32-10-20-034
R102	24-00-01-031
R4G	71-12-01
R4G	71-10-01
R901-311	27-50-10-018
R901-327-20	27-50-10-013
R901-327-24	27-50-10-014
SALP-T6-6	32-10-20-006
SCMS-P	24-01-01-009
SCMS-P	25-60-01
SCMSP	36-10-01
SC2611	21-22-10-019
SK162	27-50-10-007
SLSP-T8-11	57-10-30
SLSP-T8-12	57-10-30
SLS100T8-9	57-10-30
SL201-5AA11	53-18-01
SL211-08-1	53-18-01
SL211-3-1	28-25-10
SRN205	71-00-02
SR0335	33-44-01-011
SR0336	33-44-01-012
SR0337	33-44-01-014
SR0338	33-44-01-013
SS48172	71-64-01
SS51043	53-13-01
SS58303	53-20-01
ST4B	27-30-01-020
SW442	33-11-10
S123	32-30-01-042
S1452-048	32-20-05-038
S1452-048	32-20-10-036
S177	30-60-01-011
S22011-0E4	27-50-10-005
S23AR-RT-CS	25-22-05
S241	76-10-01-015
S241	76-12-01-027
S241	76-12-01
S4-225	24-40-01
S4-25	71-10-01
S40555	25-60-01
S41007-004	27-50-10-006
S5-325	71-12-01-019
S5-325	71-10-01
S5S	27-50-01-010
S6RN1201	71-00-03
S6RN1201	71-00-02-005
S6RN1201	71-02-01-009
S6RN1205	71-02-01
S6RN1205	71-00-03
S6RN1205	71-00-02
S6RN1225	71-00-03-005
S6RN201	71-00-02
S6RN201	71-00-01-005
S6RN205	71-00-01
S6RN25	71-00-01
S65X	21-22-01
TA0310005	78-13-01-025
TK-1518	25-10-01-028
TK-1521	25-10-01
TK1817-922-4	25-10-01-016
TM2S6	53-17-02-002
TR70-17	25-60-01-006
TS1171-2	25-10-01-019
TS1176-10	25-10-01-018
TS1222-3	25-10-01-015
TS1222-4	25-10-01
TY23M	21-22-40
VM911M-4	39-14-40-013
VM911M2	53-25-01-068
VM911M2H	27-50-20-028
VM911M2H	39-10-30-007
VM911M2H	39-10-30-006
VM911M2H	27-50-20-011
VM911M3	53-25-01-069
VM911M3H	39-10-30-009
VM911M3H	39-10-30-008
VM911M3H	27-50-20-010
VM911M3H	27-50-20-026
VM911M4	39-14-20-013
VM911M4H	27-50-20-027
VM911M7	53-25-01
VM912-4	39-10-30-014
VM912M6	39-10-30-010
VV15-625-1	32-40-40
VV15-625-2	32-40-30-065
VV15-625-2	32-40-30-021
VV15-625-2	32-40-40
V12-1/80/100	25-28-20
V7636D	61-10-04-006
W98292-2-170	52-35-01
XA1024	80-10-01-011
XA744AZ	24-30-01
XA943F	24-30-01-008
XA944J	24-30-01-009
XP51162-12	25-16-30-009

PART NUMBER	CHAP/SUB-SECT/UNIT & ITEM	PART NUMBER	CHAP/SUB-SECT/UNIT & ITEM	PART NUMBER	CHAP/SUB-SECT/UNIT & ITEM
XS48175	57-20-23-032	000-110013-3	57-10-21	000-170012-3	57-20-23-018
X4087	24-30-01-006	000-110013-4	57-10-21	000-170012-4	57-20-23
X5133-21	32-40-41-018	000-110013-7	57-10-21-002	000-170012-5	57-20-23-014
ZC268-64-6	35-00-01	000-110013-9	57-10-21-001	000-170012-6	57-20-23
ZF454	35-00-21-053	000-110014-1	57-10-21	000-170013-13	57-20-23-016
ZH691-8	35-00-23-005	000-110014-2	57-10-21	000-170013-14	57-20-23
ZV852	35-00-21-055	000-110014-5	57-10-21-008	000-170014-1	57-20-23-017
0-2497	32-30-30-013	000-110014-6	57-10-21	000-170014-2	57-20-23
0-3518	32-30-30-003	000-110014-7	57-10-21-009	000-170015-1	57-20-23-004
0-3883	32-30-30-020	000-110014-9	57-10-21-010	000-170015-2	57-20-23
0-3896	32-30-30-019	000-110022-1	57-10-21	000-170015-3	57-20-23-003
0-5113	32-30-30-024	000-110022-3	57-10-21-043	000-170016-1	57-20-23
0-5114	32-30-30-023	000-110023-1	57-10-21	000-170016-2	57-20-23
0-6864	32-30-30-001	000-110023-3	57-10-21-046	000-170016-3	57-20-23-022
0-6865	32-30-30-009	000-110024-1	57-10-21-017	000-170016-4	57-20-23
0F81A	71-02-01	000-110024-3	57-10-21-018	000-170017-1	57-20-23-025
0PHP1	25-10-01-011	000-110027-1	57-10-10-076	000-170017-2	57-20-23
000-100100-1	57-40-01-020	000-110028-1	57-10-21-042	000-170018-3	57-20-23-008
000-100100-2	57-40-01	000-110028-2	57-10-21	000-170018-3	57-20-23-002
000-100100-3	57-40-01	000-110085-3	57-20-23-034	000-170020-1	57-20-23-026
000-100100-4	57-40-01	000-110087-1	57-10-21-004	000-170021-1	57-20-23-027
000-100100-4	57-40-01	000-110087-2	57-10-21	000-170022-1	57-20-23-005
000-100100-5	57-40-01	000-110088-1	57-10-21-007	000-170022-3	57-20-23-009
000-110010-11	57-10-21-026	000-110088-2	57-10-21	000-170023-1	57-20-23-010
000-110010-15	57-10-21-030	000-110095-1	57-10-21-015	000-170023-1	57-20-23-006
000-110010-17	57-10-21-031	000-110095-3	57-10-21-016	000-170024-1	57-20-22
000-110010-19	57-10-21-032	000-110179-1	57-20-06	000-170024-1	57-20-23-047
000-110010-21	57-10-21-033	000-170000-1	57-20-23	000-170024-2	57-20-23
000-110010-23	57-10-21-034	000-170000-13	57-20-23	000-170024-2	57-20-22
000-110010-25	57-10-21-035	000-170000-14	57-20-23	000-170025-1	57-20-23-037
000-110010-27	57-10-21-037	000-170000-15	57-20-23	000-170025-2	57-20-23
000-110010-29	57-10-21-039	000-170000-16	57-20-23	000-170026-1	57-20-23-038
000-110010-3	57-10-21	000-170000-19	57-20-23-013	000-170027-1	57-20-23-041
000-110010-35	57-10-21-019	000-170000-2	57-20-23	000-170027-2	57-20-23
000-110010-36	57-10-21	000-170000-21	57-20-23-011	000-170028-1	57-20-23-046
000-110010-37	57-10-21-020	000-170000-21	57-30-01	000-170028-1	57-20-22
000-110010-39	57-10-21-013	000-170000-22	57-30-01	000-170028-2	57-20-22
000-110010-4	57-10-21	000-170000-22	57-20-23	000-170028-2	57-20-23
000-110010-45	57-10-21-029	000-170000-23	57-20-23-028	000-170029-1	57-20-23-036
000-110010-47	57-10-21-041	000-170000-24	57-20-23	000-170032-1	57-20-23
000-110010-5	57-10-21-023	000-170000-29	57-20-23-007	000-170032-1	57-20-22
000-110010-51	57-10-21-027	000-170000-29	57-30-01	000-170032-1	30-10-20-001
000-110010-53	57-10-21-028	000-170000-30	57-30-01	000-170032-1	30-10-30-048
000-110010-55	57-10-21-021	000-170000-30	57-20-23	000-170032-2	30-10-30-054
000-110010-7	57-10-21-024	000-170000-31	57-20-23-001	000-170032-2	30-10-20-014
000-110010-9	57-10-21-025	000-170000-31	57-30-01	000-170032-2	57-20-22
000-110011-1	57-10-21	000-170000-32	57-30-01	000-170032-2	57-20-23
000-110011-11	57-10-21-012	000-170000-32	57-20-23	000-361010-1	57-10-21-048
000-110011-13	57-10-21	000-170000-33	57-20-23-029	000-361011-1	57-10-21-049
000-110011-14	57-10-21	000-170000-35	57-20-23	000-361011-2	57-10-21
000-110011-15	57-10-21-036	000-170000-37	57-20-23	000-920010-1	57-10-21-050
000-110011-17	57-10-21-038	000-170000-38	57-20-23	000-920011-1	57-10-21-051
000-110011-19	57-10-21-040	000-170000-39	57-20-23-042	002-043004-3	53-17-02
000-110011-2	57-10-21	000-170000-5	57-20-23	002-043004-3	53-14-50-029
000-110011-3	57-20-01	000-170000-53	57-20-23-033	002-170000-39	57-20-21-030
000-110011-3	57-10-21	000-170000-54	57-20-23	002-361010-15	33-48-01
000-110011-3	57-10-01-001	000-170000-55	57-20-23-012	002-410032-17	32-50-01-052
000-110011-4	57-10-01	000-170000-55	57-30-01	002-410032-17	53-11-01-015
000-110011-4	57-20-01	000-170000-56	57-30-01	002-410032-17	53-10-01-063
000-110011-4	57-10-21	000-170000-56	57-20-23	002-410037-5	32-50-01-003
000-110011-40	57-10-21	000-170000-57	57-20-23	002-410055-3	52-35-02
000-110011-41	57-10-21-014	000-170000-59	57-20-23-030	002-410055-35	52-35-01
000-110011-9	57-10-21-011	000-170000-6	57-20-23	002-410055-35	52-35-02-004
000-110013-1	57-10-21	000-170010-10	57-20-23	002-410055-37	52-35-01
000-110013-10	57-10-21	000-170010-5	57-20-23-021	002-410055-39	52-35-02
000-110013-11	57-10-21-003	000-170010-7	57-20-23	002-410055-39	52-35-01
000-110013-12	57-10-21	000-170010-8	57-20-23	002-410055-41	52-35-01-002
000-110013-13	57-10-21-006	000-170010-9	57-20-23-020	002-410055-41	52-35-01-003
000-110013-14	57-10-21	000-170011-3	57-20-23-015	002-410055-41	52-35-02-002
000-110013-15	57-10-21-005	000-170011-4	57-20-23	002-410055-43	52-35-01
000-110013-16	57-10-21	000-170012-1	57-20-23-019	002-410055-43	52-35-02
000-110013-2	57-10-21	000-170012-2	57-20-23	002-410055-45	52-35-02

ALPHA-NUMERIC INDEX

(NUMERIC)

PART NUMBER	CHAP/SUB-SECT/UNIT & ITEM	PART NUMBER	CHAP/SUB-SECT/UNIT & ITEM	PART NUMBER	CHAP/SUB-SECT/UNIT & ITEM
XS48175	57-20-23-032	000-110013-3	57-10-21	000-170012-3	57-20-23-018
X4087	24-30-01-006	000-110013-4	57-10-21	000-170012-4	57-20-23
X5133-21	32-40-41-018	000-110013-7	57-10-21-002	000-170012-5	57-20-23-014
ZC268-64-6	35-00-01	000-110013-9	57-10-21-001	000-170012-6	57-20-23
ZF454	35-00-21-053	000-110014-1	57-10-21	000-170013-13	57-20-23-016
ZH691-8	35-00-23-005	000-110014-2	57-10-21	000-170013-14	57-20-23
ZV852	35-00-21-055	000-110014-5	57-10-21-008	000-170014-1	57-20-23-017
0-2497	32-30-30-013	000-110014-6	57-10-21	000-170014-2	57-20-23
0-3518	32-30-30-003	000-110014-7	57-10-21-009	000-170015-1	57-20-23-004
0-3883	32-30-30-020	000-110014-9	57-10-21-010	000-170015-2	57-20-23
0-3896	32-30-30-019	000-110022-1	57-10-21	000-170015-3	57-20-23-003
0-5113	32-30-30-024	000-110022-3	57-10-21-043	000-170016-1	57-20-23
0-5114	32-30-30-023	000-110023-1	57-10-21	000-170016-2	57-20-23
0-6864	32-30-30-001	000-110023-3	57-10-21-046	000-170016-3	57-20-23-022
0-6865	32-30-30-009	000-110024-1	57-10-21-017	000-170016-4	57-20-23
0F81A	71-02-01	000-110024-3	57-10-21-018	000-170017-1	57-20-23-025
0PHP1	25-10-01-011	000-110027-1	57-10-10-076	000-170017-2	57-20-23
000-100100-1	57-40-01-020	000-110028-1	57-10-21-042	000-170018-3	57-20-23-008
000-100100-2	57-40-01	000-110028-2	57-10-21	000-170018-3	57-20-23-002
000-100100-3	57-40-01	000-110085-3	57-20-23-034	000-170020-1	57-20-23-026
000-100100-4	57-40-01	000-110087-1	57-10-21-004	000-170021-1	57-20-23-027
000-100100-4	57-40-01	000-110087-2	57-10-21	000-170022-1	57-20-23-005
000-100100-5	57-40-01	000-110088-1	57-10-21-007	000-170022-3	57-20-23-009
000-110010-11	57-10-21-026	000-110088-2	57-10-21	000-170023-1	57-20-23-010
000-110010-15	57-10-21-030	000-110095-1	57-10-21-015	000-170023-1	57-20-23-006
000-110010-17	57-10-21-031	000-110095-3	57-10-21-016	000-170024-1	57-20-22
000-110010-19	57-10-21-032	000-110179-1	57-20-06	000-170024-1	57-20-23-047
000-110010-21	57-10-21-033	000-170000-1	57-20-23	000-170024-2	57-20-23
000-110010-23	57-10-21-034	000-170000-13	57-20-23	000-170024-2	57-20-22
000-110010-25	57-10-21-035	000-170000-14	57-20-23	000-170025-1	57-20-23-037
000-110010-27	57-10-21-037	000-170000-15	57-20-23	000-170025-2	57-20-23
000-110010-29	57-10-21-039	000-170000-16	57-20-23	000-170026-1	57-20-23-038
000-110010-3	57-10-21	000-170000-19	57-20-23-013	000-170027-1	57-20-23-041
000-110010-35	57-10-21-019	000-170000-2	57-20-23	000-170027-2	57-20-23
000-110010-36	57-10-21	000-170000-21	57-20-23-011	000-170028-1	57-20-23-046
000-110010-37	57-10-21-020	000-170000-21	57-30-01	000-170028-1	57-20-22
000-110010-39	57-10-21-013	000-170000-22	57-30-01	000-170028-2	57-20-22
000-110010-4	57-10-21	000-170000-22	57-20-23	000-170028-2	57-20-23
000-110010-45	57-10-21-029	000-170000-23	57-20-23-028	000-170029-1	57-20-23-036
000-110010-47	57-10-21-041	000-170000-24	57-20-23	000-170032-1	57-20-23
000-110010-5	57-10-21-023	000-170000-29	57-20-23-007	000-170032-1	57-20-22
000-110010-51	57-10-21-027	000-170000-29	57-30-01	000-170032-1	30-10-20-001
000-110010-53	57-10-21-028	000-170000-30	57-30-01	000-170032-1	30-10-30-048
000-110010-55	57-10-21-021	000-170000-30	57-20-23	000-170032-2	30-10-30-054
000-110010-7	57-10-21-024	000-170000-31	57-20-23-001	000-170032-2	30-10-20-014
000-110010-9	57-10-21-025	000-170000-31	57-30-01	000-170032-2	57-20-22
000-110011-1	57-10-21	000-170000-32	57-30-01	000-170032-2	57-20-23
000-110011-11	57-10-21-012	000-170000-32	57-20-23	000-361010-1	57-10-21-048
000-110011-13	57-10-21	000-170000-33	57-20-23-029	000-361011-1	57-10-21-049
000-110011-14	57-10-21	000-170000-35	57-20-23	000-361011-2	57-10-21
000-110011-15	57-10-21-036	000-170000-37	57-20-23	000-920010-1	57-10-21-050
000-110011-17	57-10-21-038	000-170000-38	57-20-23	000-920011-1	57-10-21-051
000-110011-19	57-10-21-040	000-170000-39	57-20-23-042	002-043004-3	53-17-02
000-110011-2	57-10-21	000-170000-5	57-20-23	002-043004-3	53-14-50-029
000-110011-3	57-20-01	000-170000-53	57-20-23-033	002-170000-39	57-20-21-030
000-110011-3	57-10-21	000-170000-54	57-20-23	002-361010-15	33-48-01
000-110011-3	57-10-01-001	000-170000-55	57-20-23-012	002-410032-17	32-50-01-052
000-110011-4	57-10-01	000-170000-55	57-30-01	002-410032-17	53-11-01-015
000-110011-4	57-20-01	000-170000-56	57-30-01	002-410032-17	53-10-01-063
000-110011-4	57-10-21	000-170000-56	57-20-23	002-410037-5	32-50-01-003
000-110011-40	57-10-21	000-170000-57	57-20-23	002-410055-3	52-35-02
000-110011-41	57-10-21-014	000-170000-59	57-20-23-030	002-410055-35	52-35-01
000-110011-9	57-10-21-011	000-170000-6	57-20-23	002-410055-35	52-35-02-004
000-110013-1	57-10-21	000-170010-10	57-20-23	002-410055-37	52-35-01
000-110013-10	57-10-21	000-170010-5	57-20-23-021	002-410055-39	52-35-02
000-110013-11	57-10-21-003	000-170010-7	57-20-23	002-410055-39	52-35-01
000-110013-12	57-10-21	000-170010-8	57-20-23	002-410055-41	52-35-01-002
000-110013-13	57-10-21-006	000-170010-9	57-20-23-020	002-410055-41	52-35-01-003
000-110013-14	57-10-21	000-170011-3	57-20-23-015	002-410055-41	52-35-02-002
000-110013-15	57-10-21-005	000-170011-4	57-20-23	002-410055-43	52-35-01
000-110013-16	57-10-21	000-170012-1	57-20-23-019	002-410055-43	52-35-02
000-110013-2	57-10-21	000-170012-2	57-20-23	002-410055-45	52-35-02

PART NUMBER	CHAP/SUB-SECT/UNIT & ITEM	PART NUMBER	CHAP/SUB-SECT/UNIT & ITEM	PART NUMBER	CHAP/SUB-SECT/UNIT & ITEM
002-410055-45	52-35-01	002-430032-5	53-17-52-010	1K10-6-12	36-10-01-008
002-410059-1	53-10-01	002-430033-13	53-17-52-021	1K10-6-12	71-02-02-026
002-410059-15	53-10-01	002-430033-3	53-17-52	1K10-8-12	71-02-02
002-410059-17	53-10-01	002-430033-7	53-17-52	1K10-8-12	30-10-30-007
002-410066-13	53-12-01-006	002-430033-9	53-17-52-022	1K10-8-12	71-02-01
002-410066-14	53-12-01	002-430034-1	53-17-52-017	1K17-1	39-17-30-026
002-410070-5	53-11-01	002-430034-3	53-17-52-019	1K17-1	39-17-20-007
002-410070-5	53-10-01	002-430034-5	53-17-52-016	1K17-2	39-17-20
002-430009-59	53-17-02-024	002-430034-7	53-17-52-018	1K17-3	39-17-30
002-430009-61	53-17-02-026	002-430035-3	53-16-51	1K24-2	71-02-01
S 002-430011-1	53-18-01-004	002-430035-3	53-18-01	1K24-2	30-10-30-009
002-430012-7	53-14-50-034	002-440000-61	53-18-01-021	1K24-2	71-02-02
002-430012-9	53-18-01-004	002-820014-1	32-30-10	1K43-12-12	71-02-01
002-430013-19	53-17-02-005	002-820016-27	32-30-10-007A	1K43-12-12	71-02-02-031
002-430013-25	53-17-02-017	002-820016-29	32-30-10-007B	1K43-12-12	30-10-30-011
002-430013-27	53-17-02-006	002-820016-31	32-30-10-007	1K43-12-12	36-10-01-018
002-430013-29	53-17-02-011	002-820016-39	32-30-10-009	1K9-4-6	39-17-20-005
002-430013-31	53-17-50	002-820016-41	32-30-10-011	1K9-4-8	39-17-30-031
002-430013-31	53-17-52	002-820016-9	32-30-10-008	1N1343	24-40-01-007
002-430013-31	53-20-01-019	002-820017-1	32-30-10-005	1N1520	27-50-20-022
002-430013-31	25-13-20-072	002-820018-3	32-30-10-001	1N1520	27-50-20-036
002-430013-35	53-17-02-007	0107121-9	25-23-01-013	1N2484	24-00-01
002-430013-45	53-17-02	0111-351	53-25-01	1N4005	24-00-01
002-430013-53	53-17-02	0122-351	53-25-01	1N752A	24-00-01
002-430013-53	53-14-01-033	0153-351	53-25-01	1N752A	39-10-20-016
002-430013-55	53-17-02-022	0317-351	53-25-01	1V40-550	21-40-01
002-430013-56	53-17-02	0320-351	39-10-30	1V40-550	21-40-01-077
002-430015-3	53-17-02-009	0320-351	53-25-01	10-126630-1	39-14-70-004
002-430015-5	53-17-02-008	03658-530045-3	25-13-30	10-126630-1	39-14-80-004
002-430016-1	53-17-02-015	0366	27-30-30-017	10-126676	39-14-80-003
002-430016-3	53-17-02	04407-2	57-20-01	10-126676	39-14-70-003
002-430016-5	53-17-02-014	0560B	25-23-01-055	10-126676	24-00-01
002-430017-1	53-17-02-012	06DU03	32-20-20-014	10-163131	71-00-02
002-430017-2	53-17-02-013	06DU08	32-20-20-019	10-163131	71-00-03
002-430018-7	53-17-02-004	07C56	21-40-01-004	10-320297-2	71-02-01
002-430018-9	53-17-02-010	08DU10	32-20-20-059	10-349276	71-02-02
002-430020-27	53-17-02-001	08125	32-40-10-016	10-349276	71-00-03
002-430021-19	53-17-02-020	08231	32-40-10-011	10-349276	71-02-01
002-430021-39	53-20-01-018	08231	32-40-10-013	10-349350-1	71-02-01
002-430021-39	53-17-52	09916M1	32-30-20-031	10-349350-1	71-02-02
002-430021-5	53-17-52	1-3/4D48F40	24-00-01	10-357063	71-00-03
002-430022-1	53-17-52	1-480270-0	24-00-01	10-357230-1	39-14-80
002-430022-19	53-17-52	1-480270-0	24-00-01	10-357230-1	24-00-01-005
002-430022-2	53-17-52	1-480340-0	24-00-01-015	10-357230-1A	39-14-60-008
002-430023-3	53-17-02-019	1-480340-0	24-00-01-009	10-357230-1A	39-14-80-015
002-430023-5	53-17-02	1-480350-0	57-20-23	10-382574	71-00-01
002-430023-7	53-17-02-018	1/16 X .50	25-13-20-011	10-382584	71-00-01
002-430024-1	53-17-02-003	1/16X1/2	25-13-10-062	10-382584	71-00-02
002-430025-5	53-17-02-016	1/16X1/2	25-13-30-008	10-382584	71-00-03
002-430025-7	53-17-52-008	1/16X1/2	25-13-40-008	10-382584	71-02-01
002-430025-9	53-17-52-002	1/16X1/2	25-20-10-047	10-382584	71-02-02
002-430026-27	53-17-52-012	1/16X1/2	25-20-20	10-382585	71-02-01
002-430026-29	53-17-52-014	1/4 INCH	28-20-50	10-4431	32-30-30-011
002-430026-30	53-17-52	1/4 X .37	57-20-06	10-7822	32-30-30-021
002-430026-31	53-17-52-015	1/4 X .37	57-20-06	10-7888	32-30-30-008
002-430026-32	53-17-52	1/4 34378C	33-44-01-020	10A167	28-10-20
002-430026-33	53-17-52-004	1E1136	30-62-01-019	10DU12	32-10-20-011
002-430026-34	53-17-52	1E1136	30-64-01-016	100 OHM 10 WATT	39-10-30
002-430026-35	53-17-52-020	1E12G	24-01-01	100-530164	11-30-10-024
002-430026-5	53-17-52	1E1297	30-64-01-006	100-8-2	35-00-24-008
002-430026-5	53-14-01-034	1F10G	24-01-01-018	100ABMS-A-C	34-10-01-032
002-430026-5	53-14-50-030	1G4-3	39-10-10-019	1004-408	61-20-03-043
002-430028-11	53-17-52-007	1J1-5	36-10-01-012	100696D-YG006	27-10-30-008
002-430028-3	53-17-52-001	1J1-5	71-02-01-028	100696D-YP006	27-10-30-020
002-430028-5	53-17-52-005	1J1-5	71-02-02-033	100696D-ZF008	76-12-01
002-430028-7	53-17-52-009	1J2-5	71-02-02	100696S-YP003	39-10-30-022
002-430030-3	53-17-52	1J2-5	30-10-30-002	100696S-ZN020	25-20-01-021
002-430030-7	53-17-52-003	1J2-5	36-10-01	100696S-ZY017	27-50-10-038
002-430031-1	53-17-52-006	1J4-7	36-10-01-027	100696X-YD024	32-30-20-016
002-430031-2	53-17-52	1K10-4-8	36-10-01-048	100696X-ZG-018	76-12-01
002-430032-1	53-17-52-013	1K10-4-8	39-17-30	100801A14-0375	25-20-10-027
002-430032-3	53-17-52-011	1K10-6-12	71-02-01	100801A14-0375	25-13-10

PART NUMBER	CHAP/SUB-SECT/UNIT & ITEM
100801S5-0910	53-17-01
100942C0020-31	32-30-01-050
100942H0010-10	28-25-10-009
100942H0022-22	25-13-10
100942H0022-22	52-10-01-027
100942H0022-22	52-10-02-035
100942L0023-17	52-10-01-047
100942L0023-17	52-10-02-044
100942L0200-48	25-21-20-013
100942L0216-60	25-21-30-026
100943CR-ZD028L	56-10-10-038
100943CR-ZX020F	53-16-51-064
100943YD302C	32-50-01-025
100943YN012R	21-22-10-018
100943YN012R	21-22-20-017
100943ZA016J	25-13-20-015
100943ZA016J	25-13-40-012
100943ZA016J	25-13-30-012
100943ZA016J	25-13-30-024
100943ZA016J	25-13-20-028
100943ZA016J	25-20-20
100943ZE316G	32-50-10-004
100943ZG108G	27-10-20-019
100943ZJ108D	25-20-10-043
100943ZJ108D	25-13-10-058
100943ZS023G	25-13-10-060
100943ZS023G	25-20-10-045
100943ZS027G	25-13-30-006
100943ZS027G	25-13-40-006
100943ZS027G	25-13-20-009
100943ZS027G	25-20-20-006
100951CR020WP	52-10-02
100951DD032VA	32-40-31-004
100951DD032VA	32-40-30
100951DD032XM	32-30-10
100951DD032YF	32-10-20-074
100951DD032YF	32-10-10-074
100951DD064XM	32-30-10-060
100951NY025ZZ	21-22-40
100951NY025ZZ	21-22-40
100951S031XW	27-20-20-045
100951S032XL	32-50-01-014
100951S063XP	32-30-01
100951S063XP	32-30-01-010
100951S063YU	32-30-01-012
100951X063WZ	25-20-10
100951X063WZ	25-13-10
100951X063YW	32-30-20-010
100951X100WL	32-10-20-057
10095100020WH	35-00-05-012
1013-032	61-22-02-004
1013-032	61-20-03-004
101321-00A0750	52-10-01-034
101321-00A0750	52-10-02-046
101321-2G0188	52-35-01-004
101321-2G0188	52-35-02
1014	33-44-01-016
1022A1	71-72-01
102361-00228	57-10-10-102
1028084D012	21-22-01-043
102809-093-026	32-50-10-006
102809-125-030	53-16-50-055
102809A125-014	27-20-20-005
102809A125-014	27-20-20-038
102933D4ZJ0190	25-20-20
102933D4ZJ0190	25-13-20-016
102933D4ZJ0190	25-13-30-013
102933D4ZJ0190	25-13-20-029
102933D4ZJ0190	25-13-40-013
102933D4ZJ0190	25-13-30-025
102933D4ZJ1000	25-13-30-021
102933D4ZJ1000	25-13-40-022
102933D4ZJ1000	25-13-20
102933D4ZR0850	25-21-30-012
102933D5ZX0749	27-20-20-077
102933D5ZX0750	71-60-01
102933P2ZM0156	25-22-01
102933S4ZJ0093	21-22-10
102933S4ZJ0093	21-22-20
102933S4ZJ0093	52-10-01-052
102933S4ZJ0093	52-10-02-040
103637	11-20-01-035
103637	55-10-01
103637	55-11-01
103637	55-21-01-022
103637	57-10-01-014
103637	57-50-01-043
103637	57-50-10-068
104215-00300	57-20-06
105019	21-40-01-080
105019	21-40-01-063
105090B005-6E	27-50-10-037
105090CR032-4E	32-30-20-037
105090CR032-8N	71-66-01-023
105090D030-9F	32-60-01-034
105739S-YK0431	32-10-10-039
105739S-YK0431	32-10-20-029
105739S-YZ0532	27-20-20-059
105739S-YZ0594	27-20-20-057
105739S-YZ0641	27-20-20-046
105739X-XZ0355	32-10-10
105739X-ZR0070	52-10-01-021
105739X-ZR0110	52-10-01-016
105739X-ZR0173	52-10-01-017
105739X-ZR0187	52-10-01
105739X-ZR0220	52-10-01-022
105740B-ZU0750	53-17-01
105740X-YD0490	32-20-10-045
105740X-YD0490	32-20-05
105740X-YD0500	32-20-20-056
105740X-YD1365	32-20-10-044
105740X-YD1365	32-20-05
105740X-YE0562	27-20-10-012
105740X-YN0400	32-20-20-057
105740X-YN1458	32-20-10-046
105740X-YN1458	32-20-05-043
105740X-YY1333	27-30-20-022
105740X-ZE0185	32-20-20
105740X-ZG0109	57-50-10-034
105740X-ZG0190	27-10-01-058
105740X-ZH0115	27-20-10
105740X-ZH0115	55-40-01
105740X-ZJ0490	32-10-30-019
105740X-ZJ0490	32-10-30-024
105740X-ZR0480	32-10-30-010
105740X-ZU0164	32-30-10-049
105740X-ZU0164	27-20-20-044
105774C-ZA00400	24-40-01
105774C-ZE00208	71-12-01-049
105774C-ZE00328	39-10-01
105774C-ZE0226	71-66-01-039
105798-24	21-40-01-078
105798-6	30-40-10-012
105798-7	21-20-10
105798-9	25-16-01
105798-9	30-40-10-013
105922-5A11-010	24-00-01
1059824A12-002	32-30-01-021A
106043-0804-0200	21-40-20-025
106043ZA030	28-20-01
106043ZA050	28-20-01
106043ZA070	28-20-01
106043ZB-064	71-70-01
106043ZB064	71-70-01
106043ZB164	71-70-01
106200-10-84	30-10-10-030
106200-4-10	30-60-01-014
106200FR10-16	30-10-10-033
106200FR10-24	30-10-20-036
106200FR10-48	30-10-20-034
106200FR4-106	30-10-10-038
106200FR4-11	71-70-01
106200FR4-94	71-00-02
106200FR4-94	71-00-01-033
106200FR8-44	71-00-02
106200FR8-44	71-00-02
106200FR8-44	71-00-01
106200FR8-44	71-00-01-039
106200FR8-52	71-00-01
106200FR8-52	71-00-01-036
106200FR8-52	71-70-01
106200FR8-60	71-00-01
106200FR8-74	71-00-01-038
106200G-4-92	71-00-03-034
106200G-8-61	71-00-03-035
106200G12-10	30-10-30-004
106200G8-40	71-00-03-030
106200G8-61	71-70-01-009
106200H-12-11	71-70-01-001
106200H-4-12	30-10-10-025
106200H-4-24	34-10-01-021
106200H10-10	36-10-10-026
106200H10-11	36-10-01-025
106200H10-11	30-10-30-022
106200H10-12	30-10-30-061
106200H10-12	36-10-10-029
106200H10-15	39-17-01-018
106200H10-17	39-17-10
106200H10-24	30-10-30-064
106200H10-26	39-17-10-002
106200H10-5	30-10-30-020
106200H10-70	39-17-10-004
106200H10-8	36-10-10-046
106200H10-8	30-10-30-057
106200H10-84	71-00-03-025
106200H10-84	71-00-02-025
106200H10-84	30-10-20-038
106200H12-11	71-70-01-006
106200H12-132	30-10-30-006
106200H12-14	71-72-01-005
106200H12-18	30-10-30-017
106200H12-18	36-10-01-021
106200H12-32	71-72-01-001
106200H12-8	30-10-30-067
106200H12-96	30-10-30-078
106200H20	34-10-10-002
106200H4	28-20-01-020
106200H4	28-10-10-007
106200H4	28-20-01-006
106200H4	28-10-10
106200H4-15	28-10-10-021
106200H4-15	28-10-10
106200H4-24	34-10-10-024
106200H4-52	32-60-01
106200H4-8	36-10-10-048
106200H4-90	71-00-02-034
106200H4-90	34-10-01-024
106200H4-90	34-10-10-022
106200H4-90	71-00-03
106200H6-12	36-10-10-034
106200H6-15	28-10-10-013
106200H6-16	34-10-01
106200H6-18	36-10-10-037
106200H6-24	39-17-30-027
106200H6-24	39-17-30-035
106200H6-47	28-10-10-024

PART NUMBER	CHAP/SUB-SECT/UNIT & ITEM	PART NUMBER	CHAP/SUB-SECT/UNIT & ITEM	PART NUMBER	CHAP/SUB-SECT/UNIT & ITEM
106200H6-6	34-10-10	1111-595272	28-10-10-002	113-205-102	39-14-50-013
106200H6-8	36-10-10-032	1111-595273	28-20-01-053	113-205-102	39-14-40-010
106200H8-104	30-10-30-077	111190-14	32-50-10-008	113-205-102	33-48-01
106200H8-12	30-10-20-053	111191-02400	25-22-03	113-205-102	39-14-40-007
106200H8-17	39-17-10-006	111191-06000	25-22-03	113-205-102	30-30-01
106200H8-40	71-00-02-030	111200-6	32-10-10-043	113-205-102	30-40-01
106200H8-42	71-00-02-035	111200-6	32-20-05-019	113-205-102	30-60-01
106200H8-42	71-00-03	111200-6	32-20-10-051	113-210-102	33-40-01-010
106200H8-42	71-70-01	111503-1331A	32-10-20	113-210-102	33-40-03-007
106200H8-8	36-10-10-039	111503-1540A	32-10-20	113-210-102	39-14-40-012
106200H8-84	71-00-02	111504ZL0102-13	25-20-01-020	113-210-102	53-50-10
1062004-8	30-10-10	111504ZM0020-8	25-13-01-015	113-215-102	39-14-50
106242	33-47-01	111530	11-30-10-066	113-215-102	39-14-40-008
106242-1A-00100	32-10-20	11154	33-45-01	113-215-102	30-62-01-001
106242-10	32-40-30	1116902	71-00-01	113-220-102	30-62-01
106242-10	32-40-30-062	1116902	71-00-02	113-220-102	39-14-50
106242-10	32-40-31	1116902	71-00-03	1136B16	78-12-01
106242-10	32-40-31	111716-2XX19	71-00-03	1136B16A	78-12-01
106242-10-0080	32-40-31	111716AX-XX4-32	21-20-01	1136B16A	78-12-01
106242-10-00800	32-40-30-018	111716AX3XX42	21-40-01-040	1136B16A	78-13-01
106242-14-00700	76-12-01	111716AX4XX11	21-20-01-012	1136B16AL	78-13-01
106242-14-01100	76-12-01	111716AX4XX15	21-20-10-020	1136B16AL	78-12-01
106242-3-00104	32-10-20	111716AX4XX32	30-40-10-010	113667	25-10-01
106242-3-03600	32-10-20	111716AX4XX44	30-40-10-011	114693-2-00900	32-60-01-030
106242-5-01550	52-32-01-018	111716AX4XX70	21-20-01-011	114693-4-00500	36-10-10-022
1065-2670	30-60-10-016	111716AX4XX99	21-20-01-008	114931-1-10	39-14-40
1065-2985	30-60-10-008	111716AX5XX34	21-20-10-016	114931-1-11	39-14-40
1081-14	21-40-60-011	111716AX5XX44	21-20-01-021	114931-1-13	39-14-40
1081-21	21-40-60-010	111716AX6XX30	71-66-01-045	114931-1-16	39-14-50
108424-2	25-22-01	111722	57-40-01	114931-1-2	39-14-50
108424-2	56-20-01	111745	11-20-01-001	114931-1-2	39-10-30-023
108424-2	57-10-10	111745	11-20-01	114931-1-3	39-10-30-029
108424-2	57-10-10-021	111745	11-20-10	114931-1-3	39-14-40
108424-2	57-10-10	111745	11-30-10	114931-1-4	39-14-40
108424-4	57-10-10	1118976	71-00-03	114931-1-4	39-10-30-024
108424-4	57-10-10-005	1118976	71-00-02	114931-1-6	39-14-50
108424-4	53-18-01-033	1118976	71-00-01	114931-1-7	39-10-30-026
108424-4	55-11-01	1119237C	71-00-01	114931-1-9	39-10-30-035
108424-4	53-15-01-032	1119237C	71-00-02	114931-3-14	39-14-60-019
109-205-101	39-14-50	1119237C	71-00-03	115-384041	32-50-01-040
109-215-104	39-14-50-021	112136-4	32-40-30-037	115005-1	30-10-20-071
109-220-104	39-14-50-019	112136-4	32-40-31-001	115005-1	57-10-10
109-250-104	39-14-50-015	112406	32-10-20-080	115005-1	53-18-01
109-250-104	39-14-40-022	112406	11-20-01-032	115005-2	53-10-01
109010	32-40-40-006	112416	32-20-10-068	115005-2	53-11-01-042
109615-4-081	53-10-01	112416-01124	33-40-01	115005-3	57-10-10
109615-4-081	53-11-01-014	112416-01124	33-40-05	115005-6	30-10-20-043
109615-4-081	53-50-10-014	112416-01124	33-40-07	115081-5	11-20-01-019
109615-4-081	53-50-20-012	112416-01316	33-40-03	115081-5	11-20-10-016
11-016	32-40-41-025	112416-01316	33-40-01	115081-7	11-20-01
11B-A2	71-00-01	112416X10 3/4	25-28-01	115081-7	11-20-10
11C30	21-40-01	112447S1C-C300T	21-20-10	115092-05200	53-11-01
1100	33-44-01-006	112447S1C-C300T	21-20-01-007	115092-11000	57-40-01
1100718	71-00-01	112700	11-20-01-034	115098-2	11-20-01-025
1100718	71-00-02	112700	24-40-01-013	115098-3	11-20-01
1100723	71-02-01-005	112733-2	11-20-10-015	115098-4	11-20-01
1100747	71-00-01	112733-2	11-20-01-018	115098-5	11-20-01
1100747	71-00-02	112733-4	11-20-01	115098-5	11-20-10-001
1101911	71-00-03	112733-4	11-20-10	115111-1	53-50-10-020
1101911	71-00-02	112734	11-20-10-012	115167CXX040384	71-00-03
1101911	24-30-10	112734	11-20-01-009	115167CXZ060505	71-00-03-046
1101911	71-00-01	112735B-C	11-20-01-006	115167CXZ060585	71-00-03
1105053	71-00-01	112735B-C	11-20-10-010	115167CXZ060585	71-00-01-031
1105056	71-00-01-010	112735W-C	11-20-10	115167CXZ060585	71-00-02-046
1105056	71-00-02-010	112735W-C	11-20-01	115167CXZ060845	71-02-01-034
1105056	71-00-03-010	112736B-C	11-20-01-005	115167CXZ060845	71-02-02-039
1108234	71-00-03-007	112736B-C	11-20-10-011	115184	11-30-10-067
1108234	71-00-02-007	112736W-C	11-20-10	118540BHP1	27-20-01-035
1108234	71-00-01	112736W-C	11-20-01	118540BHP1	55-40-01-003
1108234	71-02-01-006	113-103-101	53-50-01	118540BHP2	27-10-01-019
111-203-101	39-14-50-018	113-205-102	39-14-50-026	118540BHP3	27-10-01-002
1111-595272	28-20-01	113-205-102	39-14-40	118540BHP3	27-10-01-081

PART NUMBER	CHAP/SUB-SECT/UNIT & ITEM	PART NUMBER	CHAP/SUB-SECT/UNIT & ITEM	PART NUMBER	CHAP/SUB-SECT/UNIT & ITEM
118540BHP3	27-30-01-022	130010	25-13-40-047	14C17	21-40-01-025
118540BHP3	27-30-01-062	130010	25-20-10-031	14C18	21-40-01-028
118540BHP4	53-11-01	130010	25-13-30-056	14C19	21-40-01-031
118540BHP4	27-30-01-057	130010	25-13-20-069	14C20	21-40-01-029
118540BHP4	27-10-01-006	130010	25-13-10-041	14C23	21-40-01-026
118540BHP4	27-10-01-017	130010-1	25-13-40	14T3	21-40-60
118641	25-13-10-046	130066-1	25-10-01-004	1419-508	61-20-03-060
118641	25-13-10-052	130069	11-20-01	1425 1M	33-44-01
118641	25-13-20-014	130071	11-20-10-003	1440-14	25-22-01-130
118641	25-13-20-027	130071	11-20-01-026	1440-14	25-22-05-127
118641	25-13-30-011	130177-5	71-12-01	1440-14	25-23-01
118641	25-13-30-023	130332	25-10-01	145-20	32-40-22-018
118641	25-13-40-011	130376	25-10-01	1495	33-11-10
118641	25-20-10-035	130411-00900	30-10-20-004	1495	27-10-20
118641	25-20-20-009	130411-00900	30-10-30-046	1495	24-00-01
118642-1	32-20-10-038	130498A19-33	25-13-10-066	15-48A	71-02-02
118642-1	32-20-05-034	130498A19-33	25-20-10-050	15-48A	71-00-03
118642-3	32-10-10	130498C19-32	25-20-20	15-48A	71-02-01
118642-7	32-10-20-030	130498C19-32	25-13-40	15-48A	71-02-01
118650	25-22-01-022	130498C19-32	25-13-20	15T370A	21-40-60
118650	25-22-02-008	130498C19-32	25-13-30	150PDL12	39-14-20-003
118650	25-22-03-051	130569	25-13-20-064	150PL12	53-25-01-033
118650	25-22-05-101	130569	25-13-40-053	150PL8	39-14-60
118650	25-22-07-025	130569	25-20-20-036	150PL8	39-14-50-031
118654	24-00-01-019A	130569	25-21-30	150PL8	39-14-60-002
118654	24-30-20	130569	11-30-10-064	1500859	39-14-01-017
118658	24-00-01	130728	11-30-10-065	151-19	32-40-02-001
118662	25-10-01	130728	11-20-10-023	151-3	57-20-01-005
1189712-2	30-60-01-009	130728	11-20-01-002	1515642	39-10-10
1189712-3	30-60-01-010	130776	25-10-01	1515642	39-10-01
119	76-15-01-001	130906TC-BC065	25-13-40	152-17	32-40-02-003
119	76-15-01-013	130907C-AC182	21-22-40-021	1524	33-40-08-011
119	76-16-01-001	130907T-C-AB84	21-22-40-026	153-1	32-40-10-017
119	76-16-01-013	130909B20	32-30-10-007C	153-15	32-40-02-012
1191-3CNX285	27-10-20	130909B24	32-30-10-008A	153-9	32-40-02-008
1195	25-22-03-037	130909N32	78-13-01-023	154-1	32-40-10-018
12C60	21-40-01-024	130909N32	32-20-05	154-13	32-40-02-011
1203	24-00-01-036	130909N33	54-10-01	154-14	32-40-02-009
121P60501R5V1 OR	24-01-01-004	130909N33/M/	57-20-21	155-2	32-40-10-019
121128-2	71-66-01-026	131002-9	27-10-01-056	15766	32-30-20
12163Y63 31	27-50-01	131044	24-30-10-018	1579	21-40-60-019
121743	24-30-10-024	131052-1	27-20-10	1580-2	21-40-60-007
122601	71-64-01-004	131052-1	27-50-01-016	1581-37	21-40-60
124545	24-30-10-038	132243	24-30-10-030	1591	21-40-60-009
12527Y63 31	27-50-01-005	132923	24-30-10	16XXXX	32-10-10-045
1253-324	61-22-01-056	133A3	39-17-10	161-23	32-40-02
1253-324	61-22-02-058	134A1	39-17-10-007	162-21	32-40-02
12613-1	33-47-01-004	1340A	27-50-20-023	164-27	32-40-02-005
12613-1	33-49-01-009	1340A	27-50-20-037	16781	33-45-01-024
1299-104	61-20-03-070	1355-168	61-20-02-058	16781	33-46-01-007
1299-104	61-22-02-067	1355-168	61-20-03-056	168-3	30-10-10-055
130-032-330	21-22-50	1355-168	61-22-01-058	168-3	30-10-01
130-032-330	21-22-40-020	1355-168	61-22-02-060	168-3	57-20-01
130-032-331	53-52-03	136	39-10-10	1680	39-14-20-020
130000BEP1	27-30-01-029	13731-3	33-49-01-003	1683	53-51-01-012
130000BEP1	27-10-01-073	13737	33-49-01-004	1683	33-44-10-010
130000BEP1	27-10-01-072	138-2	24-00-01	169-300001-23	32-40-01-001
130000BEP1	27-10-01-075	13830	32-40-01-007	169-380021-11	39-10-30-004
130000BEP1	27-10-01-074	13830	32-40-01-012	169-380021-11	24-00-01-029
130000BEP3	27-20-01-023	13836	32-40-02-002	169-380021-9	24-00-01-030
130000BEP3	27-30-01-041	13836	32-40-02-004	169-524033-1	27-30-11-008
130000BEP3	27-30-01	1386115-1	21-40-60-038	169-524033-3	27-30-11-007
130000BEP3	27-30-01-049	1386116-1	21-40-60-039	169-524033-5	27-30-11-014
130000BEP3	27-30-01-044	13889	32-40-01-002	1729	32-10-10-037
130000BEP3	27-10-01-001	13889	32-40-02-007	1729	32-10-20-022
130000BEP4	27-10-01-007	14-48A	71-02-01	1729	32-20-05
130000BEP4	27-20-01-026	14-48A	71-02-02	1729	32-20-05
130000BEP4	27-20-01-010	14-48A	71-00-03	1729	32-20-10-014
130000BEP4	27-20-01-004	14-48A	71-02-01	1729	32-20-10-023
130010	25-20-20-038	14C09	21-40-01-023	1729	32-30-01-025
130010	25-21-20-028	14C14	21-40-01-021	1736	32-50-01-041
130010	25-21-30-034	14C16	21-40-01-030	1736	32-50-01-044

PART NUMBER	CHAP/SUB-SECT/UNIT & ITEM	PART NUMBER	CHAP/SUB-SECT/UNIT & ITEM	PART NUMBER	CHAP/SUB-SECT/UNIT & ITEM
1736	32-50-01-046	18-534013-69	25-20-10-026	186283	61-20-03
1775-354-324-174	25-22-07-072	18-534013-7	25-20-10-021	186283	61-20-02-011
18-300001	35-00-21-052	18-534013-7	25-13-10-034	186283	61-20-01-011
18-300002	35-00-01-008	18-534013-73	25-13-10	186320	61-20-01-062
18-300002	35-00-05-003	18-534013-77	25-20-10-053	186320	61-20-02-065
18-300004	35-00-05	18-534013-77	25-13-10-023	186320	61-22-01-065
18-300004-1	35-00-05	18-534013-89	25-20-10-018	186321	61-22-01-066
18-300004-1	35-00-01	18-534013-90	25-20-10	186321	61-20-02-066
18-300004-3	35-00-05-004	18-534013-91	25-20-10-023	186321	61-20-01-063
18-300004-3	35-00-01-011	18-534013-91	25-13-10-040	1864	24-00-01-020
18-300008	35-00-20-032	18-534013-93	25-13-10-038	1864	25-16-20
18-300008	35-00-20-010	18-534015-1	25-20-10-009	1864	33-11-10
18-300008	35-00-20-022	18-534015-1	25-13-10-020	186446	61-20-02-068
18-300008-3	35-00-20-031	18-534015-2	25-13-10-021	186446	61-20-01-065
18-300009-11	35-00-05-009	18-534015-2	25-20-10	186446	61-22-01-068
18-300009-11	35-00-01-019	18-534016-1	25-20-10-005	186455	61-22-01-022
18-300009-21	35-00-05-005	18-534016-1	25-13-10-006	186455	61-20-02-022
18-300009-23	35-00-22-022	18-534016-2	25-13-10-007	186455	61-20-01-022
18-300009-23	35-00-21-019	18-534016-2	25-20-10-006	1870	21-22-10-005
18-300009-27	35-00-21	18-534020-3	25-13-10	1870	21-22-20-023
18-300009-27	35-00-22	18-534020-3	25-20-10	1870	21-22-20-025
18-300009-29	35-00-22-030	18-534020-3	25-21-01	1870	21-22-30-018
18-300009-29	35-00-21-026	18-534022-1	25-13-10-017	187247	25-20-01-014
18-300009-31	35-00-21-028	18-534022-2	25-13-10	188141	61-22-02
18-300009-31	35-00-21-038	18-534024-1	25-13-10-028	188141	61-22-01
18-300009-31	35-00-21-046	18-534024-1	25-20-10-015	188141	61-20-03
18-300009-31	35-00-21	180231	61-20-01-031	188141	61-20-01
18-300009-31	35-00-22-032	180231	61-20-02-031	188141	61-20-02
18-300009-31	35-00-22-059	180231	61-20-03-029	188302	61-20-02-006
18-380008	25-20-10-013	180231	61-22-01-031	188302	61-20-01-006
18-380008	25-13-10-026	180231	61-22-02-026	188302	61-22-02-015
18-380021-1	39-14-10	180963	24-40-01-003	188302	61-20-03-017
18-380021-3	39-14-20-019	180968	24-40-01-006	188302	61-22-01-007
18-380022-1	39-14-10	1819	24-00-01	188434	61-22-02
18-420016	11-30-01-092	182194	61-22-01-013	188434	61-22-01-002
18-534013	25-13-10-025	182194	61-20-01-013	188434	61-20-03-010
18-534013-103	25-13-10	182194	61-20-02-013	188434	61-20-02-002
18-534013-121	25-20-10-022	182478	61-20-01-056	188434	61-20-01-002
18-534013-123	25-13-10-039	182483	61-20-03-065	1886684	24-30-10-036
18-534013-129	25-13-10-037	182483	61-22-02-050	1886685	24-30-10-014
18-534013-13	25-13-10-002	182506	61-20-01-055	189522	61-20-03-027
18-534013-13	25-20-10-001	182621	61-20-02-059	189522	61-22-02-010
18-534013-131	25-13-10-031	182621	61-22-01-059	189522	61-22-01-010
18-534013-135	25-13-10	182621	61-20-03-057	189522	61-20-01-010
18-534013-149	25-13-10-012	182621	61-22-02-061	189522	61-20-02-010
18-534013-149	25-13-10-035	182628	61-22-02-019	189529	61-20-01-016
18-534013-149	25-20-10-024	182628	61-20-03-023	189529	61-22-01-016
18-534013-15	25-20-10-003	182649	61-20-03-041	189529	61-20-02-016
18-534013-15	25-13-10-004	182649	61-22-02-031	189574	61-20-02-043
18-534013-17	25-13-10-018	182684	61-22-01-014	189574	61-22-01-043
18-534013-17	25-20-10-007	182684	61-20-02-014	189574	61-20-01-040
18-534013-19	25-13-10-008	182684	61-20-01-014	189611	61-22-02-045
18-534013-25	25-13-10-011	182799	61-20-03-021	189611	61-22-01-036
18-534013-27	25-13-10-022	182799	61-22-02-020	189611	61-20-02-036
18-534013-27	25-20-10-011	1829	33-11-10	189611	61-20-03-048
18-534013-29	25-20-10-020	183-1	32-40-22-014	189739	61-20-03-014
18-534013-29	25-13-10-033	184793	61-20-01-049	189739	61-22-01
18-534013-3	25-13-10	184793	61-20-02-052	189739	61-22-02
18-534013-31	25-13-10-030	184793	61-22-01-052	189739	61-20-02
18-534013-31	25-20-10-017	1850759	24-30-10-010	189739	61-20-01
18-534013-39	25-20-10	185678	25-22-01	189880	61-20-01-003
18-534013-39	25-13-10	185678	52-35-01-006	189880	61-20-02-003
18-534013-43	25-20-10	185678	52-35-01-010	189880	61-22-02-011
18-534013-44	25-20-10	185678	52-35-02-005	189880	61-22-01-003
18-534013-45	25-13-10	1857412	24-30-10-031	189880	61-20-03-012
18-534013-5	25-20-10	1858749	24-30-10-013	19-022-094-0650	25-13-01-013
18-534013-51	25-20-10-012	1858753	24-30-10-033	190189	61-20-01-004
18-534013-55	25-13-10	1861591	24-30-10-035	190189	61-20-02-004
18-534013-59	25-13-10	186234	61-20-03	190189	61-20-03-013
18-534013-6	25-20-10	186234	61-22-02	190189	61-22-02-013
18-534013-61	25-13-10	186283	61-22-02	190189	61-22-01-005
18-534013-67	25-13-10-042	186283	61-22-01-011	1903720	24-30-10-009

PART NUMBER	CHAP/SUB-SECT/UNIT & ITEM	PART NUMBER	CHAP/SUB-SECT/UNIT & ITEM	PART NUMBER	CHAP/SUB-SECT/UNIT & ITEM
1906984	24-30-10-008	200661	30-10-10-062	210078	61-22-01-070
1908999	24-30-10-007	2010B	39-10-20	210078	61-20-01-067
1910131	24-30-10-016	202095	25-10-01	210078	61-20-02-070
1913960	24-30-10-029	203-01-10	61-24-01-004	210100	61-20-03-019
1914123	24-30-10-017	204864	61-22-02-033	210100	61-22-01-015
1914579	24-30-10-021	204864	61-22-01-049	210100	61-20-02-015
1914978	24-30-10-020	204864	61-20-01-046	210100	61-20-01-015
1915172	24-30-10-023	204864	61-20-02-049	210100	61-22-02-021
191869	61-20-03-018	204864	61-20-03-037	210112	61-22-02-042
191869	61-20-02-009	205-10A	39-14-40	210112	61-22-01-035
191869	61-20-01-009	205-10A	39-10-01	210112	61-20-01-036
191869	61-22-01-009	205-10A	78-13-01	210112	61-20-03-045
191869	61-22-02-017	205-10A	78-10-01-021	210112	61-20-02-035
192103	61-22-02-041	205-10A	78-12-01	210206	61-20-02-050
192103	61-22-01-033	205-10AL	78-12-01	210206	61-20-03-036
192103	61-20-03-044	205-10AL	78-10-01	210206	61-20-01-047
192103	61-20-01-033	205-10AL	78-13-01	210206	61-22-01-050
192103	61-20-02-033	205-10AL	39-10-01-030	210206	61-22-02-036
192370	61-20-02-069	205-10AL	39-14-40-035	210207	61-20-01-035
192370	61-20-01-066	206	27-30-30-013	210216	61-20-01-032
192370	61-22-01-069	206336	61-20-01-048	210216	61-22-02-027
192558	61-22-02-051	206336	61-20-02-051	210216	61-20-03-030
1925832	24-30-10-004	206336	61-20-03-035	210216	61-22-01-032
192660	61-20-03-050	206336	61-22-01-051	210216	61-20-02-032
192662	61-22-01-037	206336	61-22-02-038	210236	61-20-02-021
192662	61-22-02-047	2065-2660	30-60-10-026	210236	61-22-01-021
192662	61-20-02-037	2065-2812	30-60-10-020	210236	61-20-01-021
192749	61-20-02-028	206595	61-22-01-017	210237	61-20-03-059
192749	61-20-03-025	206595	61-20-02-017	210238	61-20-03-061
192749	61-20-01-028	206595	61-20-01-017	210238	61-20-02-063
192749	61-22-02-023	2068-265	21-40-60	210238	61-20-01-060
192749	61-22-01-028	208108	61-20-03-042	210238	61-22-02-065
1927844	24-30-10-012	208108	61-22-02-037	210238	61-22-01-063
192884	61-20-03-066	209217	61-22-02-070	210239	61-22-01-046
1929703	24-30-10-002	209217	61-22-01-055	210239	61-20-01-043
1930314	24-30-10-001	209217	61-20-03-074	210239	61-20-02-046
1939902	24-30-10-015	209217	61-20-02-055	210241	61-20-02-042
1943589	24-30-10-011	209217	61-20-01-052	210241	61-20-01-039
1943590	24-30-10-003	21-199-35	28-20-60	210241	61-22-01-042
1954	53-17-50-025	21S125-0250	32-40-61-015	210242	61-22-02-005
2-2844-75	39-17-01-043	210031	61-20-03-039	210242	61-20-01-023
2AF34C55/78FF-0	30-60-01	210031	61-20-02-047	210242	61-20-03-005
2AF34C55/78FF-0	61-10-02	210031	61-20-01-044	210242	61-20-02-023
2AF34C5578FF0	71-00-03	210031	61-22-02-034	210242	61-22-01-023
2AF34C5578FF0	71-02-01-048	210031	61-22-01-047	210243	61-20-03-051
2AF34C5578FF0	61-12-01	210034	61-22-02-018	210243	61-20-02-040
2AF34C5578FF0	71-00-01-048	210034	61-20-02-012	210243	61-20-01-037
2AF34C5578FF0	71-00-02-052	210034	61-20-01-012	210243	61-22-02-055
2AF36C39/78BFM-0	30-60-01	210034	61-20-03-022	210243	61-22-01-040
2AF36C39P78BFM0	61-10-01	210034	61-22-01-012	210244	61-22-02-007
2AF36C39P78BFM0	71-00-01	210035	61-22-01-008	210244	61-20-01-024
2A12715	39-10-01	210035	61-20-01-008	210244	61-20-02-024
2A12715	39-10-20	210035	61-20-02-008	210244	61-22-01-024
2A20580	25-22-01-088	210036	61-20-01-045	210246	61-22-02
2A20580	25-23-01	210036	61-22-02-035	210248	61-22-02-064
2E1260	30-62-01-014	210036	61-22-01-048	210248	61-22-02-066
2E1260	30-64-01-014	210036	61-20-03-038	210248	61-20-01-058
2H22-11	30-10-30-018	210036	61-20-02-048	210248	61-22-01-061
2H3-6	39-17-10-005	210039	61-20-01-001	210248	61-20-03-062
2H30-6	36-10-01-022	210044	61-20-01-029	210248	61-20-02-061
2N3055	24-00-01	210044	61-22-02-024	210252	61-20-02-019
2N4036	39-10-20-017	210044	61-20-02-029	210252	61-20-01-019
2N4036	24-00-01	210044	61-20-03-026	210253	61-22-01-019
2TS1	24-00-01	210044	61-22-01-029	210273	61-22-02-063
20-2279	32-30-30	210071	61-20-02-071	210276	61-22-02
20-3841	32-30-30-025	210071	61-22-01-071	210276	61-20-01-059
20-7609	32-30-30-004	210071	61-20-01-068	210276	61-22-01-062
20-7642	32-30-30-017	210076	61-20-01-061	210276	61-20-03
200-2-2	35-00-22-039	210076	61-20-02-064	210276	61-20-02-062
200-8-2	35-00-22-042	210077	61-20-02-067	210277	61-20-03-006
200242	24-30-10-037	210077	61-20-01-064	210277	61-20-02-025
200362	24-30-10	210077	61-22-01-067	210277	61-22-01-025

PART NUMBER	CHAP/SUB-SECT/UNIT & ITEM	PART NUMBER	CHAP/SUB-SECT/UNIT & ITEM	PART NUMBER	CHAP/SUB-SECT/UNIT & ITEM
210277	61-22-02-006	218036	61-22-01-054	23S2004-15-1	30-10-20
210277	61-20-01-025	218077	61-22-02-016	23S2004-15-1	30-10-30-084
210289	61-20-01-034	218077	61-20-03-015	23S2004-15-2	30-10-20
210289	61-22-02-043	218148	61-20-02-041	23S2004-15-2	30-10-30-085
210289	61-22-01-034	218148	61-20-01-038	23S2004-2-1	30-10-01-003
210289	61-20-03-046	218148	61-22-02-056	23S2004-2-2	30-10-01
210289	61-20-02-034	218148	61-22-01-041	23S2004-5-1	30-10-10-016
210297	61-20-02	218148	61-20-03-052	23S2004-5-1	30-10-01-002
210297	61-22-01	218312	61-20-03-071	23S2004-5-2	30-10-10
210297	61-20-01	218312	61-22-02-069	23S2004-5-2	30-10-01
210314	61-22-01	218993	61-20-01-026	23S2004-7-1	30-10-10-017
210314	61-22-02	218993	61-20-02-026	23S2004-7-1	30-10-01-001
210314	61-20-02	218993	61-22-01-026	232CW	71-02-01
210316	61-20-02-038	219375	61-20-01-005	232CW	71-02-02-019
210316	61-20-03-047	219375	61-20-02-005	232CW	36-10-01-001
210316	61-22-02-044	219375	61-20-03-016	232811-3	30-10-10-041
210316	61-22-01-038	219375	61-22-01-006	23599-01	35-00-23-001
210317	61-22-01-039	219375	61-22-02-014	23599-01	35-00-24-048
210317	61-22-02-046	2194	27-50-01-033	23599-01	35-00-24-032
210317	61-20-03-049	2194	57-50-01-046	23599-01	35-00-24-043
210317	61-20-02-039	219414	61-22-01	23599-01	35-00-24-024
210322	61-20-02-020	22A1-82	57-20-05	23599-01	35-00-23
210322	61-22-01-020	22A1-82	57-20-06	23599-02	35-00-24-004
210322	61-20-01-020	22A17-02	76-16-01-012	23719	35-00-23-019
210331	61-20-01-030	22A17-02	76-15-01-012	2373	21-22-10-027
210331	61-22-02-025	22A17-02	27-30-20	2373	21-22-20-002
210331	61-22-01-030	22A17-82	53-17-01	2373	21-22-20-022
210331	61-20-03-028	22A17-82	57-20-05	2373	21-22-20
210331	61-20-02-030	22A17-82	57-10-10	2373	21-22-20-037
210347	61-22-01-018	22A17-82	57-10-10	2373	21-22-30-002
210347	61-20-01-018	22A17-82	57-20-06	2373	21-22-30-017
210347	61-20-02-018	22A17-82	57-20-10	2373	21-22-30-049
210355	61-20-01	22A17-82	57-20-10	2390A17	25-22-01
210355	71-00-02	22A17-82	57-20-06	24C54	25-10-01
210355	71-00-01-014	22A17-82	57-20-05	242CW	36-10-01
210358	61-20-01-027	22A17-82	57-20-05	242CW	71-02-02
210358	61-22-02-022	22A17-82	57-20-05	25 OHM 10 WATT	39-10-30
210358	61-22-01-027	22A17-82	57-20-05	25-0491-1	33-44-10-024
210358	61-20-03-020	22A17-82	57-20-05	25S7D5057-03	30-10-20-024
210365	61-20-01	22A17A82BC100	57-10-01	25S7D5057-04	30-10-20-029
210385	61-20-02-027	22A24-82	57-20-06	25S7D5057-09	30-10-20-030
2104	52-10-01-061	22A24-82	57-20-05	25S7D5057-09	30-10-30-087
213214	61-20-01-050	22A38-02BC100	57-20-10	25T18A17	21-40-60
213214	61-20-02-053	22A38-82BC	57-10-10	2505	24-00-01
213214	61-20-03-033	22A38-82BC	57-10-10	2505	53-25-01-075
213214	61-22-02-039	22A38-82BC100	57-20-05	2506	21-22-40-003
213214	61-22-01-053	22A38-832BC	57-20-10	2515	21-22-40-008
213419	61-22-02-009	22A5-02	53-10-01	2515	21-22-40-016
213430	61-20-03	22A5-048	53-15-01	2565	21-22-40-015
21375	33-45-01	22NA1K82	57-20-05	26006	27-30-30-024
214-16	71-10-01	22NA1K82	57-20-05	2610-064	32-40-21-004
214-16	71-10-01	22NA17-62	53-17-01	26119	27-10-20
214-16	71-10-01	22NA21-22-02BC	53-13-01	264PX1/2	34-10-01-033
214-16	71-12-01-043	22NA38-82BC	53-11-01	264PX1/2	34-10-10
214-16	71-12-01-064	22NC3-02	30-60-10	268P1/4-1/8	39-17-10-027
2140-54	28-20-01	22NW2234-02	30-60-10-018	268P1/4-1/8	39-17-20-018
2140-54	28-20-01	2201-18	61-12-02-005	268P1/4-1/8	39-17-30-017
2140-54	28-20-01	223003	61-20-01-042	268P1/4-1/8	39-17-30-021
214099	61-20-03-069	223003	61-22-01-045	268P3/8-1/4	30-10-10-001
214099	61-22-02-054	223003	61-20-02-045	268P3/8-3/8	30-10-10-004
217-1	32-40-10-014	223423	61-22-01-044	26875-48	35-00-01
217475	61-20-01-053	223423	61-20-02-044	269P1/4-1/8	32-60-01-023
217475	61-20-02-056	223423	61-20-01-041	271P1/4-1/8	32-60-01-024
217475	61-20-03-054	2238-14	21-40-60-031	271P1/4-1/8	39-17-10-029
217582	61-20-03-055	2240-14	21-40-60	271P1/4-1/8	39-17-20-020
217582	61-20-02-057	23C62	21-40-01-033	271P1/4-1/8	39-17-30-019
217582	61-20-01-054	23S2004-11-1	30-10-01-004	27395A	32-30-30-006
218P60501R5T1 OR	24-01-01	23S2004-11-2	30-10-01	281XDX24VDC	24-00-01-025
218036	61-20-01-051	23S2004-14-1	30-10-01-005	28420-093-10	32-40-61-019
218036	61-20-02-054	23S2004-14-1	30-10-10-022	29T74A	21-40-60
218036	61-20-03-034	23S2004-14-2	30-10-10	294660-1	25-22-02
218036	61-22-02-040	23S2004-14-2	30-10-01	294660-1	25-22-05

PART NUMBER	CHAP/SUB-SECT/UNIT & ITEM
2951-11	21-40-60-022
295158-56	76-15-01-008
295158-56	76-16-01-008
295250-5	71-12-01
295250-5	71-66-01
295718	52-35-01
295718	53-11-01
295718	53-11-01
295925-56	53-25-01
299-6	21-40-60-024
3 OHM 10 WATT	24-00-01
3 OHM 10 WATT	39-10-30
3AF32C75/82NB-6	30-60-01
3AF32C7582NB6	71-02-01
3AF32C7582NB6	61-12-03
3AG	39-10-30
3A17680	25-23-01
3A17680	25-23-01
3A2302-4	30-10-01
3D1133-2	39-14-01-032
3D1247	30-10-01-047
3D1313	11-30-01-046
3D1313	39-14-01-033
3D1313	53-25-01-034
3D1348	30-10-01-056
3D1349	30-10-01-048
3D1542-03	30-10-20-058
3D1549-0241	30-10-20-065
3E1150-3	30-62-01-003
3E1150-3	30-64-01-003
3E1271-2	30-64-01-012
3E1271-2	30-62-01-012
3E1443-1	30-62-01-017
3E1443-1	30-64-01-018
3E1443-2	30-64-01-019
3E1443-2	30-62-01-016
3E1461	30-64-01-004
3E1513	30-62-01-004
30-0329A	33-44-10-012
30-0329D1	33-44-10-008
30-0329E1	33-44-10-009
30-0502-5	33-11-10-001
30-0530-5	33-44-10
30-0815-1	33-44-10
30-1467-101	33-44-10-022
30-1467-5	33-44-10
30-15	39-14-30-013
30-15	39-14-10-012
30-15	39-14-80-019
30-15	39-14-80-009
30-66	32-40-22
30-66	32-10-20
30-7623	32-30-30-010
30C1023	39-14-80
30C1032	39-14-10
30C57	25-10-01
3003	52-32-01
3005A1	39-17-10
3006	52-32-01
302D	32-20-10-040
302D	32-20-20-054
302D	32-10-20-031
302D	32-10-10-024
3023	32-40-02-013
303	21-22-01-051
303	21-22-10
303	21-22-20-008
303	21-22-20-019
303	21-22-30
303	21-22-30
3053-034	61-20-03-024
3053-034	61-22-02-028
3065-2480	30-60-10-022
3065-2482	30-60-10-024
3065-3289	30-60-10
3067P1-202	27-50-20-020
3067P1-202	27-50-20-034
307	33-11-10
307	33-30-01-005
3082-145	61-22-02-071
3082-145	61-20-03-073
31-0725-1	33-44-10-011
31-1704-1	33-11-10
31-1705-3	33-11-10
31-1745	33-44-10-013
31-2401-1	33-44-10
31-2440-3	33-44-10-015
31-3792-3	33-44-10-020
31-3794-1	33-44-10
31-3908-1	33-44-10-017
31-3920-1	33-44-10-021
31-3921-1	33-44-10-019
31TOA	34-10-10
3111-022	61-20-03-064
3111-022	61-22-02-049
313	33-11-10
313	24-00-01
313B38	21-40-60-030
3159-024	61-22-02-003
3159-024	61-20-03-003
3180-050	61-20-03-067
3180-050	61-22-02-052
31890	57-20-23
319	39-10-30-039
319A209-1	27-30-30-004
32-456-900	71-02-01
32C93	21-40-01-003
32FE-524	32-40-01-005
320-601A	30-60-10
320-629A	30-60-10
3201-048	61-22-02-008
3201-048	61-20-03-008
3210-00	39-17-10-010
32445	53-25-01
32446	57-20-23
32446	33-47-01-011
32493A	32-30-30-007
32495-1	33-47-01-005
327	39-14-10
327	39-14-20
327	39-14-20
327	39-14-40
327	39-14-60
327	39-14-80
327	30-60-10
327	33-10-01
329B4	21-40-60-015
3290-054	61-22-02-053
3290-054	61-20-03-068
33-130000-1	57-50-10
33-130000-11	57-50-10
33-130000-11	57-50-10-020
33-130000-13	57-50-10
33-130000-15	57-50-10
33-130000-17	57-50-10
33-130000-19	57-50-10
33-130000-21	57-50-10-067
33-130000-21	57-50-10-058
33-130000-3	57-50-10
33-130000-3	57-30-01
33-130000-31	57-50-10
33-130000-33	57-50-10
33-130000-35	57-50-10
33-130000-37	57-50-10
33-130000-44	57-50-10
33-130000-5	57-50-10
33-130000-7	57-50-10
33-130000-9	57-50-10
33-199-1	28-20-60-015
33-199-105-3	28-20-01
33-199-105-3	28-20-60
33-199-36	28-20-60-018
33-199-6	28-20-60-012
33-199-7	28-20-60-017
33-199-8	28-20-60-016
33-199-909	28-20-60-014
33-199-913	28-20-60-010
33-324030	11-30-01-013
33-324032	11-30-01
33-324032	11-30-10-005
33-340000-61	25-28-01
33-410031-123	53-18-01-090
33-410031-124	53-18-01
33-410031-125	53-18-01-091
33-410031-126	53-18-01
33-410031-75	27-30-01
33-410040-1	53-17-01-025
33-410040-2	53-17-01
33-410040-27	53-17-01-030
33-410040-27	53-17-02-025
33-410040-9	53-17-01-028
33-410040-9	53-17-02-023
33-420000-5	53-18-01-111
33-420000-6	53-18-01
33-440022	53-18-01-066
33-440026	53-18-01-068
33-440032-3	53-18-01-095
33-440034	53-18-01-098
33-524023-11	27-30-30-011
33-524023-51	27-30-30
33-524024	27-30-30-015
33-524025	27-30-30-006
33-524030	27-30-01
33-530003-107	25-22-01-100
33-530003-135	25-22-01
33-530003-49	25-23-01-063
33-530003-621C	25-22-05-129
33-530003-89	25-22-05-090
33-530003-89	25-22-01-070
33-530007-143	25-22-07-042
33-530007-279	25-22-07-061
33-534010-33	25-13-01-012
33-534015-7	25-28-20-012
33-534015-8	25-28-20
33-534015-9	25-28-20
33-534021-3	25-20-10
33-534024-15	52-10-01-067
33-534024-19	53-14-01-030
33-534024-19	53-14-50-031
33-534024-19	25-22-05-030
33-534024-21	25-22-05
33-534027-11	25-13-10-063
33-534027-11	25-13-20-060
33-534027-11	25-20-10-032
33-534042-1	25-22-05-040
33-534042-1	25-23-01
33-534042-3	25-22-05
33-921016-1	28-10-10-006
33-921016-1	28-10-10
330995-8-0090	28-20-01
330995-8-0090	73-12-01
330995F6-0260	61-24-01
330995F6-0315	61-24-01-011
330995F6-0315	61-24-01-013
330997F6-0270	61-24-01
33107A	32-30-30-015

PART NUMBER	CHAP/SUB-SECT/UNIT & ITEM	PART NUMBER	CHAP/SUB-SECT/UNIT & ITEM	PART NUMBER	CHAP/SUB-SECT/UNIT & ITEM
331081-1	25-23-01	35-115035-5	57-20-10	35-115177-4	57-20-05-017
331081-1	25-23-01	35-115036-4	57-20-10-021	35-115177-4	57-20-06-035
331081-1	25-23-01	35-115036-4	57-20-12	35-115177-5	57-20-06
3331-042	61-20-03-040	35-115036-5	57-20-12	35-115177-5	57-20-05
3331-042	61-22-02-032	35-115036-5	57-20-10	35-115177-6	57-20-05-018
3368-4	30-10-01-063	35-115036-6	57-20-12	35-115177-6	57-20-06-036
3368-5	30-10-01-062	35-115036-7	57-20-12	35-115177-7	57-20-06
33793-11	33-49-01-007	35-115036-8	57-20-12-003	35-115177-7	57-20-05
3381-036	61-20-03-053	35-115036-9	57-20-12	35-115184	57-10-21-044
3381-036	61-22-02-057	35-115037-4	57-20-12	35-115184	57-10-20-042
34-410038-146	53-16-50-073	35-115037-5	57-20-12	35-115194-31	57-10-10
34CB759	25-22-01-069	35-115037-6	57-20-12	35-115194-33	57-10-10
34CB759	25-22-05-071	35-115037-7	57-20-12	35-115199-12	57-10-01-022
34CB759	25-22-07-018	35-115037-8	57-20-12-005	35-115199-12	57-10-10-113
34138	27-70-01-007	35-115037-9	57-20-12	35-115200-110	57-10-10
34138	27-70-01-012	35-115038-4	57-20-12	35-115200-111	57-10-10
34300-9	33-49-01-005	35-115038-4	57-20-10-023	35-115200-30	57-10-10
34810A	71-00-01	35-115038-5	57-20-10	35-115200-31	57-10-10
35-000061	11-30-01-008	35-115038-5	57-20-12	35-115200-42	57-10-10-084
35-000061	11-30-10-014	35-115038-6	57-20-12	35-115200-42	57-10-01-023
35-000064-31	11-20-01-010	35-115038-7	57-20-12	35-115200-42	57-10-01-024
35-000064-33	11-20-01-011	35-115038-8	57-20-12-004	35-115200-42	57-10-01-025
35-000064-39	11-20-01	35-115038-9	57-20-12	35-115200-6	57-10-10-050
35-105005-10	57-40-01-019	35-115046	57-20-12-006	35-115200-6	57-30-01-053
35-105005-11	57-40-01	35-115046-1	57-20-12	35-115200-7	57-30-01-054
35-105005-12	57-40-01-022	35-115046-2	57-20-12	35-115200-7	57-10-10
35-105005-13	57-40-01	35-115046-3	57-20-12	35-115202-10	57-10-10
35-105005-18	57-40-01	35-115046-4	57-20-12	35-115202-12	57-10-10
35-105005-19	57-40-01	35-115046-5	57-20-12	35-115202-14	57-10-10
35-105005-20	57-40-01	35-115051-16	57-10-10	35-115202-4	57-10-10
35-105005-21	57-40-01	35-115051-20	57-10-10	35-115202-5	57-10-10
35-105005-4	57-40-01	35-115051-21	57-10-10	35-115202-6	57-10-10
35-105005-4	57-40-01	35-115062	57-10-30-008	35-115202-7	57-10-10
35-105005-6	57-40-01	35-115070-12	57-10-10	35-115203	57-10-10
35-105005-6	57-40-01	35-115070-13	57-10-10	35-115203-1	57-10-10
35-105110	57-40-01-023	35-115070-22	57-10-10	35-115205	57-10-10
35-105110-1	57-40-01	35-115070-23	57-10-10	35-115205-1	57-10-10
35-105110-2	57-40-01	35-115070-24	57-10-10-006	35-115207	57-10-10
35-105110-3	57-40-01	35-115070-25	57-10-10	35-115207-1	57-10-10
35-105110-4	57-40-01	35-115071-10	57-20-15-030	35-115208	57-10-10
35-105110-5	57-40-01	35-115071-12	57-20-15	35-115208-1	57-10-10
35-110061-67	57-10-20	35-115071-14	57-20-15-028	35-115211-9	57-30-01-012
35-110061-69	57-10-20-041	35-115071-15	57-20-15	35-115211-9	57-20-10
35-110065-1	57-10-21	35-115071-16	57-20-15-029	35-115212	57-20-06-087
35-110065-2	57-10-21	35-115071-17	57-20-15	35-115212	57-20-05-071
35-115020-74	57-10-20	35-115100-18	57-10-10	35-115212-1	57-20-05-074
35-115020-74	57-10-20-022	35-115100-20	57-10-10	35-115212-1	57-20-06
35-115020-8	57-10-20-039	35-115100-22	57-10-10	35-115213	57-20-06-088
35-115020-9	57-10-20	35-115100-24	57-10-10	35-115213	57-20-05-075
35-115028-11	57-20-05-069	35-115111	57-10-10	35-115213-1	57-20-05-076
35-115028-11	57-20-06-008	35-115111-2	57-10-10-053	35-115213-1	57-20-06
35-115028-9	57-20-06-009	35-115130-10	57-10-10	35-115214	57-20-06-089
35-115028-9	57-20-05-068	35-115142-20	57-10-10	35-115214	57-20-05-077
35-115034	57-20-10	35-115142-26	57-10-10-105	35-115215	57-10-20-045
35-115034	57-20-12-002	35-115142-40	57-10-10-011	35-115215	57-10-21-047
35-115034-1	57-20-12	35-115147	57-20-15	35-115232	57-10-20-040
35-115034-1	57-20-10	35-115147-2	57-20-15-023	35-115236	57-20-15-067
35-115034-2	57-20-10-017	35-115150-1	57-20-15-058	35-115241	57-10-10
35-115034-2	57-20-12	35-115160-16	57-20-15-021	35-115241-2	57-10-10
35-115034-3	57-20-12	35-115160-17	57-20-15	35-115241-6	57-10-10
35-115034-3	57-20-10	35-115166-10	57-20-06-075	35-115242	57-10-10
35-115035	57-20-10	35-115166-11	57-20-06	35-115242-2	57-10-10
35-115035	57-20-12-001	35-115166-14	57-20-06	35-115242-4	57-10-10
35-115035-1	57-20-12	35-115166-14	57-20-05-011	35-115246	57-10-10-009
35-115035-1	57-20-10	35-115166-16	57-20-05-013	35-115246-2	57-10-10
35-115035-2	57-20-10-018	35-115166-16	57-20-06	35-115246-4	57-10-10
35-115035-2	57-20-12	35-115166-20	57-20-06	35-115247	57-10-10-010
35-115035-3	57-20-12	35-115166-20	57-20-05-010	35-115247-2	57-10-10
35-115035-3	57-20-10	35-115166-4	57-20-05-070	35-115247-4	57-10-10
35-115035-4	57-20-10-019	35-115166-4	57-20-06-074	35-115252-10	57-10-10
35-115035-4	57-20-12	35-115166-5	57-20-06	35-115252-2	57-10-10
35-115035-5	57-20-12	35-115166-5	57-20-05	35-115252-3	57-10-10

PART NUMBER	CHAP/SUB-SECT/UNIT & ITEM	PART NUMBER	CHAP/SUB-SECT/UNIT & ITEM	PART NUMBER	CHAP/SUB-SECT/UNIT & ITEM
35-115252-8	57-10-10	35-115431-28	57-20-10	35-115431-83	57-20-10-035
35-115256	57-10-10-120	35-115431-29	57-20-10-039	35-115431-84	57-20-10
35-115264	57-10-10-119	35-115431-29	57-20-06-014	35-115431-85	57-20-10-054
35-115264	27-50-30-019	35-115431-30	57-20-06	35-115431-85	57-20-06
35-115267	57-10-10-014	35-115431-30	57-20-10	35-115431-86	57-20-06
35-115269	57-10-10-004	35-115431-31	57-20-10-062	35-115431-86	57-20-10
35-115269	57-10-10-106	35-115431-31	57-20-06-007	35-115431-87	57-20-10-055
35-115269-1	57-10-10	35-115431-33	57-20-06-002	35-115431-87	57-20-06
35-115270	57-10-10-020	35-115431-33	57-20-10-002	35-115431-88	57-20-06
35-115270	57-10-10	35-115431-34	57-20-10	35-115431-88	57-20-10
35-115270-1	57-10-10	35-115431-34	57-20-06	35-115431-9	57-20-10-031
35-115270-1	57-10-10	35-115431-35	57-20-10-037	35-115431-9	57-20-06-010
35-115276	57-10-10	35-115431-36	57-20-10	35-115431-93	57-20-10-048
35-115276	56-20-01	35-115431-39	57-20-10-038	35-115431-94	57-20-10
35-115276-1	56-20-01	35-115431-39	57-20-06-013	35-115431-99	57-20-06-081
35-115301-22	57-20-15-068	35-115431-40	57-20-06	35-115431-99	57-30-01
35-115383	57-20-06-090	35-115431-40	57-20-10	35-135025	57-50-10
35-115383-2	57-20-06	35-115431-41	57-20-06-022	35-135025-10	57-50-10-071
35-115383-2	57-20-05-078	35-115431-42	57-20-06	35-135025-104	57-50-10-075
35-115383-5	57-20-05	35-115431-45	57-20-06-023	35-135025-106	57-50-10-056
35-115383-5	57-20-06	35-115431-46	57-20-06	35-135025-108	57-50-10-065
35-115383-7	57-20-06	35-115431-47	57-20-10-057	35-135025-12	57-50-10-051
35-115395	57-20-15-010	35-115431-49	57-20-10-060	35-135025-2	57-50-10-057
35-115395	57-20-15-018	35-115431-5	57-20-10	35-135025-2	57-50-10-066
35-115431-10	57-20-10	35-115431-5	57-20-06-004	35-135025-2	57-50-10-063
35-115431-10	57-20-06	35-115431-50	57-20-10	35-135025-2	57-50-10-060
35-115431-100	57-20-06	35-115431-51	57-20-10-058	35-135025-20	57-50-10-074
35-115431-100	57-30-01	35-115431-52	57-20-10	35-135025-22	57-50-10-059
35-115431-103	57-20-06-033	35-115431-59	57-20-10-015	35-135025-28	57-50-10-062
35-115431-104	57-20-06	35-115431-59	57-20-06	35-135025-32	57-50-10-054
35-115431-105	57-20-06-027	35-115431-6	57-20-06	35-135025-32	57-40-01
35-115431-107	57-30-01	35-115431-6	57-20-10	35-135025-36	57-40-01
35-115431-107	57-20-12-010	35-115431-60	57-20-10	35-135025-36	57-50-10-053
35-115431-108	57-20-12	35-115431-60	57-20-06	35-135025-4	57-50-10-050
35-115431-108	57-30-01	35-115431-605	57-20-10	35-135025-40	57-50-10-061
35-115431-109	57-20-06-029	35-115431-606	57-20-10	35-135025-40	57-50-10-064
35-115431-110	57-20-06	35-115431-607	57-20-10	35-135025-6	57-50-10-052
35-115431-111	57-20-06-028	35-115431-608	57-20-10	35-135025-6	57-30-01-051
35-115431-112	57-20-06	35-115431-609	57-20-10	35-135025-8	57-50-10-070
35-115431-113	57-20-12-011	35-115431-609	57-20-06	35-160025-1	27-50-30
35-115431-114	57-20-12	35-115431-610	57-20-06	35-160025-1	27-50-01-034
35-115431-115	57-20-12-012	35-115431-610	57-20-10	35-160025-17	27-50-30-006
35-115431-116	57-20-12	35-115431-611	57-20-10	35-165050-30	57-50-01-018
35-115431-117	57-20-06-024	35-115431-611	57-20-06	35-165050-31	57-50-01-019
35-115431-118	57-20-06	35-115431-612	57-20-06	35-165050-34	57-50-01-009
35-115431-123	57-20-06-025	35-115431-612	57-20-10	35-165050-35	57-50-01-010
35-115431-125	57-20-06	35-115431-613	57-20-10	35-165050-606	57-50-01
35-115431-126	57-20-06	35-115431-613	57-20-06	35-165050-607	57-50-01
35-115431-127	57-20-10-056	35-115431-614	57-20-06	35-165050-62	57-50-01-020
35-115431-15	57-20-10-012	35-115431-614	57-20-10	35-165050-63	57-50-01-021
35-115431-15	57-20-06	35-115431-615	57-20-10	35-165050-64	57-50-01-011
35-115431-16	57-20-06	35-115431-615	57-20-06	35-165050-65	57-50-01-012
35-115431-16	57-20-10	35-115431-616	57-20-06	35-165050-68	57-50-01
35-115431-17	57-20-10-013	35-115431-616	57-20-10	35-165050-69	57-50-01
35-115431-17	57-20-06	35-115431-621	57-20-10	35-165050-70	57-50-01-042
35-115431-173	57-20-06	35-115431-621	57-20-06	35-165050-71	57-50-01
35-115431-18	57-20-10	35-115431-622	57-20-06	35-165050-73	57-50-01
35-115431-18	57-20-06	35-115431-622	57-20-10	35-165050-74	57-50-01
35-115431-19	57-20-06	35-115431-627	57-20-06-095	35-165050-75	57-50-01
35-115431-19	57-20-10-014	35-115431-628	57-20-06	35-165050-76	57-50-01-007
35-115431-20	57-20-10	35-115431-69	57-20-10-061	35-165050-77	57-50-01
35-115431-20	57-20-06	35-115431-69	57-20-06-006	35-165050-81	57-50-01
35-115431-21	57-20-06	35-115431-7	57-20-05-042	35-165050-84	57-50-01-015
35-115431-21	57-20-10-016	35-115431-7	57-20-06-058	35-165051-8	57-50-01
35-115431-23	57-20-10-040	35-115431-70	57-20-10	35-165051-8	57-30-01
35-115431-23	57-20-06-015	35-115431-70	57-20-06	35-165051-9	57-30-01
35-115431-24	57-20-06	35-115431-77	57-20-06-001	35-165051-9	57-30-01
35-115431-24	57-20-10	35-115431-77	57-20-10-001	35-165051-9	57-50-01
35-115431-25	57-20-10-041	35-115431-78	57-20-10	35-324033-4	39-10-30-049
35-115431-27	57-20-10-003	35-115431-78	57-20-06	35-324086	39-14-60-018
35-115431-27	57-20-06-003	35-115431-8	57-20-05	35-324098	34-10-01
35-115431-28	57-20-06	35-115431-8	57-20-06	35-324204	39-10-30-046

PART NUMBER	CHAP/SUB-SECT/UNIT & ITEM	PART NUMBER	CHAP/SUB-SECT/UNIT & ITEM	PART NUMBER	CHAP/SUB-SECT/UNIT & ITEM
35-324204	39-10-01-015	35-364151-3	27-50-10-002	35-380053-3	39-14-60-010
35-324204	39-10-30-053	35-364151-31	27-50-10-024	35-380053-3	39-14-60-012
35-324323-7	34-10-01	35-364151-33	27-50-10-023	35-380053-3	39-14-50-010
35-324360	11-30-01-090	35-364151-35	27-50-10-021	35-380053-3	39-14-40-015
35-324387-5	39-10-01-019	35-364151-39	27-50-10-016	35-380053-3	33-44-01-002
35-324387-5	39-10-10-002	35-364151-41	27-50-10-008	35-380053-3	33-44-10-001
35-324387-5	39-10-20-005	35-364151-43	27-50-10-017	35-380053-5	39-14-50-022
35-324428-11	34-10-01-039	35-364151-45	27-50-10-035	35-380053-5	30-10-20-023
35-324428-11	34-10-10	35-364151-47	27-50-10-027	35-380053-651	39-14-40-006
35-324428-23	34-10-01-040	35-364151-49	27-50-10-028	35-380053-651	39-14-40
35-324428-23	34-10-10-015	35-364151-5	27-50-10-040	35-380053-652	39-14-40-014
35-324432-603	27-50-20	35-364151-51	27-50-10	35-380053-653	39-14-40-016
35-324432-603	27-50-20	35-364151-57	27-50-10	35-380053-653	39-14-40-026
35-324438	27-50-20-038	35-364151-57	27-50-01-029	35-380053-654	39-14-40
35-324438	27-50-20-024	35-364151-57	24-00-01-037	35-380053-654	39-14-80
35-324451-21	39-14-30	35-364151-61	27-50-10	35-380053-654	24-00-01-006
35-324451-33	39-14-30-001	35-364151-7	27-50-10	35-380053-656	32-60-01
35-324451-45	39-14-30	35-364151-9	27-50-10-032	35-380053-657	39-14-40-005
35-324451-47	39-14-30	35-364160	25-23-01	35-380053-7	39-14-40
35-324451-65	39-14-30	35-364160-1	25-23-01-050	35-380053-7	39-14-80-006
35-324451-67	39-14-30	35-364160-3	25-23-01-046	35-380053-9	39-14-50-009
35-324459-1	52-10-02	35-364160-3	25-10-01	35-380053-9	39-14-60-007
35-324459-1	53-16-51-010	35-364171-3	32-60-01-032	35-380055-1	25-23-01-047
35-324470	11-30-10-032	35-364238	27-50-30	35-380063-9	32-40-31-014
35-324470-1	39-14-30-011	35-364238	57-20-15	35-380065-5	32-40-60
35-344152	21-22-01-056	35-364258-1	33-40-01	35-380065-5	32-40-30-023
35-344158	21-22-01-058	35-364259-1	33-40-01-004	35-380087-1	32-60-01-039
35-344169	21-22-01-057	35-364268-1	33-44-01-003	35-380090	32-60-01-036
35-344211	11-30-01-069	35-380019-1	34-10-20	35-380132-1	39-14-60-014
35-344267-17	24-00-01	35-380019-1	39-14-70-007	35-380132-1	30-40-01
35-360011-5	24-01-01	35-380019-1	39-14-80	35-380132-41	39-14-60-016
35-361016	11-20-01-007	35-380019-3	39-14-80	35-380132-41	33-48-01-004
35-361016-1	11-20-01-008	35-380019-3	34-10-20	35-380132-43	33-44-10
35-361025-1	24-01-01	35-380019-5	34-10-20-004	35-380132-43	33-40-05-008
35-361025-1	57-20-12	35-380019-5	39-14-80-012	35-380132-43	33-40-07-008
35-361109	34-10-10-021	35-380019-5	39-14-80-021	35-380132-43	39-14-60-017
35-361109	36-10-10-003	35-380020-1	32-10-20-037	35-380132-5	30-60-10
35-361132-1	32-10-10-077	35-380020-1	32-10-10-044	35-380132-5	30-64-01-001
35-361132-1	32-10-20-077	35-380020-3	32-20-10-049	35-380132-7	30-64-01
35-361133	32-10-10-079	35-380020-3	32-20-05-028	35-380135-10	28-10-01
35-361133	32-10-20-079	35-380037-1	39-14-10	35-380135-9	28-10-01
35-361133-2	32-10-10	35-380039-1	39-14-10	35-380136-3	28-10-01
35-361133-3	32-10-10	35-380043-1	39-14-10	35-380136-5	28-10-01
35-361134	32-10-10-072	35-380044-1	39-14-10	35-400010-14	52-10-01-005
35-361134	32-10-20-072	35-380044-1	34-10-20	35-400010-14	52-10-02-004
35-361135-1	32-10-20-066	35-380049-11	21-20-10	35-400010-18	52-10-02-009
35-361135-1	32-10-10-066	35-380049-15	21-20-10-008	35-400010-18	52-10-01-006
35-361136	32-10-10-071	35-380049-23	21-20-10	35-400010-28	52-10-02-008
35-361136	32-10-20-071	35-380051-15	21-22-10-047	35-400010-28	52-10-01-053
35-361145	32-10-20-059	35-380051-15	21-22-20-055	35-400010-40	52-10-01-040
35-361145	32-10-10-082	35-380051-29	21-20-10	35-400010-42	52-10-01
35-361148-1	32-10-10-081	35-380051-29	30-40-10	35-400010-6	52-10-02-002
35-361148-1	32-10-20	35-380051-3	53-52-02-014	35-400010-6	52-10-01-003
35-361150	32-10-10-073	35-380052	24-00-01	35-400010-62	52-10-01-001
35-361150	32-10-20-073	35-380052	30-40-01	35-400010-66	52-10-01-002
35-361151	57-20-12-009	35-380052	30-10-20-022	35-400010-66	52-10-02-013
35-361151-2	57-20-12	35-380052	33-44-10	35-400010-69	52-10-02-005
35-361153	32-10-20-076	35-380052	33-44-01	35-400010-71	52-10-02-012
35-361153	32-10-10-076	35-380052	32-60-01-009	35-400010-73	52-10-02
35-364022	21-22-10-017	35-380052	39-14-50-012	35-400010-8	52-10-01-004
35-364022	21-22-20-016	35-380052	39-14-80	35-400013	52-10-01
35-364022	21-22-01-055	35-380053-1	39-14-50-011	35-400013-1	52-10-01-031
35-364061	25-23-01-048	35-380053-1	39-14-60-009	35-400013-1	52-10-02-047
35-364126	32-30-20-049	35-380053-11	39-14-50-024	35-400014-603	52-10-01
35-364127	32-30-01-002	35-380053-11	32-60-01-008	35-400014-609	52-10-01
35-364130	32-30-01-003	35-380053-11	30-40-01-014	35-400014-610	52-10-01
35-364151-1	27-50-10-020	35-380053-21	39-14-60-006	35-400014-615	52-10-02
35-364151-17	27-50-10-026	35-380053-21	39-14-80-016	35-400014-617	52-10-02
35-364151-21	27-50-10-009	35-380053-21	39-14-80-017	35-400018	52-10-01
35-364151-23	27-50-10-031	35-380053-23	39-14-60-011	35-400018-12	52-10-01
35-364151-27	27-50-10-039	35-380053-25	30-10-30	35-400018-12	52-10-01
35-364151-29	27-50-10-015	35-380053-27	39-14-60-013	35-400018-18	52-10-01

PART NUMBER	CHAP/SUB-SECT/UNIT & ITEM	PART NUMBER	CHAP/SUB-SECT/UNIT & ITEM	PART NUMBER	CHAP/SUB-SECT/UNIT & ITEM
35-400018-8	52-10-01	35-400457	53-16-51-059	35-410038-155	53-16-51-061
35-400029-2	52-10-02-010	35-400457	53-16-50-048	35-410038-155	53-16-50
35-400029-2	52-10-01-008	35-400461-2	52-10-01-042	35-410038-173	53-16-50-019
35-400029-4	52-10-01-009	35-400461-4	52-10-01-043	35-410038-173	53-16-51-030
35-400029-4	52-10-02-011	35-400461-4	52-10-02-016	35-410038-175	53-16-51-036
35-400031	52-10-01	35-400462	52-10-01-044	35-410038-175	53-16-50-020
35-400031-1	52-10-01-032	35-400462	52-10-02-043	35-410038-177	53-16-50-022
35-400031-1	52-10-02-049	35-400464-6	52-10-01-045	35-410038-177	53-16-51-040
35-400032-2	52-10-01-007	35-400464-8	52-10-01	35-410038-179	53-16-51
35-400032-3	52-10-02-037	35-400464-8	52-10-02-042	35-410038-179	53-16-50
35-400033	52-10-02-050	35-400467-3	52-10-01-060	35-410038-189	53-16-50
35-400033	52-10-01-033	35-400471-13	53-15-01-041	35-410038-205	53-16-51
35-400036	52-10-01-039	35-400471-15	53-15-01-042	35-410038-213	53-16-51-001
35-400036	52-10-02-007	35-400471-17	53-15-01-043	35-410038-22	53-16-50-028
35-400041	52-10-01-048	35-400471-19	53-15-01-044	35-410038-22	53-16-51-034
35-400041	52-10-02-053	35-400471-25	53-15-01-070	35-410038-24	53-16-51
35-400044	52-10-01-036	35-400471-29	53-15-01-045	35-410038-24	53-16-50-029
35-400044-1	52-10-01	35-400472	52-10-01-073	35-410038-32	53-16-51
35-400044-1	52-10-02-048	35-400472	52-10-02-041	35-410038-32	53-16-50
35-400213	53-18-01-093	35-400472	11-30-10-010	35-410038-34	53-16-51
35-400298	52-20-01-009	35-400472	11-30-01-003	35-410038-34	53-16-50
35-400304-3	53-12-01-009	35-400473-23	53-18-01	35-410038-4	53-16-50-021
35-400320-20	52-10-01	35-400473-43	53-18-01	35-410038-4	53-16-51-031
35-400320-32	52-10-01-054	35-400474	11-30-01-004	35-410038-44	53-16-51-008
35-400320-32	52-10-02-036	35-400474	11-30-10-011	35-410038-44	53-16-50-043
35-400320-34	52-10-01-055A	35-4012-1	32-30-10	35-410038-46	53-16-50-045
35-400320-50	52-10-02-079	35-410000-11	53-14-01-017	35-410038-46	53-16-51-009
35-400320-50	52-10-01	35-410000-11	53-14-50	35-410038-52	53-16-50-018
35-400320-52	52-10-01-058	35-410000-122	53-15-01-021	35-410038-54	53-16-50-044
35-400320-52	52-10-01	35-410000-123	53-15-01	35-410038-54	53-16-51-015
35-400320-54	52-10-01	35-410000-125	53-14-50-011	35-410038-58	53-16-51-011
35-400320-54	52-10-02-080	35-410000-15	53-14-50-015	35-410038-58	53-16-50-037
35-400320-6	52-10-01	35-410000-15	53-14-01-007	35-410038-58	52-10-02
35-400320-66	52-10-01-059	35-410000-24	53-14-01-004	35-410038-6	53-16-50-026
35-400320-66	52-10-02-003	35-410000-25	53-14-01	35-410038-6	53-16-51
35-400320-68	52-10-01-057	35-410000-30	53-14-01-005	35-410038-60	53-16-50-042
35-400320-68	52-10-02-057	35-410000-31	53-14-01	35-410038-602	53-16-51
35-400320-69	52-10-02-015	35-410000-36	53-14-50	35-410038-602	53-16-50
35-400320-8	52-10-01	35-410000-37	53-14-50	35-410038-604	53-16-50
35-400320-9	52-10-01-056	35-410000-38	53-14-50-012	35-410038-604	53-16-51-002
35-400320-93	53-16-50	35-410000-38	53-14-01-018	35-410038-62	53-16-50-023
35-400322	53-16-50-009	35-410000-8	53-14-01-016	35-410038-632	53-16-51
35-400322-2	53-16-50-049	35-410000-8	53-14-50-010	35-410038-632	53-16-50
35-400339-2	53-13-01-021	35-410000-90	53-14-50-032	35-410038-634	53-16-50
35-400339-2	27-10-01-035	35-410015	27-20-01	35-410038-64	53-16-50
35-400359-10	53-11-01-054	35-410015	27-30-01	35-410038-65	53-16-50
35-400359-10	53-10-01-070	35-410015	53-18-01-018	35-410038-70	53-16-50-015
35-400359-12	53-10-01	35-410015-1	53-18-01	35-410038-70	53-16-51-041
35-400359-12	53-11-01	35-410015-1	27-30-01	35-410038-72	53-16-51-042
35-400364-1	53-10-01	35-410015-1	27-20-01	35-410038-72	53-16-50-016
35-400364-10	53-10-01-067	35-410023	53-18-01-092	35-410038-74	53-16-51-029
35-400364-12	53-11-01	35-410038-10	53-16-50-011	35-410038-74	53-16-50-007
35-400364-4	53-11-01	35-410038-10	53-16-51	35-410038-8	53-16-50
35-400364-6	53-11-01	35-410038-102	53-16-50-005	35-410038-8	53-16-51-039
35-400364-8	53-11-01-052	35-410038-102	53-16-51-045	35-410038-88	53-16-51-033
35-400366-1	53-10-01	35-410038-106	53-16-51-046	35-410038-88	53-16-50-050
35-400366-10	53-10-01-068	35-410038-106	53-16-50-006	35-410038-90	53-16-51
35-400395	52-10-01-029	35-410038-110	53-16-50-008	35-410038-90	53-16-50-027
35-400395	52-10-02-039	35-410038-110	53-16-51-047	35-410038-98	53-16-51-023
35-400404	52-10-01-038	35-410038-12	53-16-50-012	35-410038-98	53-16-50-010
35-400404-1	52-10-02-055	35-410038-12	53-16-51-032	35-410070-10	52-30-01
35-400414	52-10-02-056	35-410038-120	53-16-51-014	35-410070-101	52-30-01
35-400414	52-10-01-010	35-410038-120	53-16-50-040	35-410070-12	52-30-01
35-400417	52-10-02-052	35-410038-122	53-16-50-039	35-410070-18	52-30-01-008
35-400417	52-10-01-046	35-410038-122	53-16-51-013	35-410070-18	53-14-01
35-400423	52-10-01	35-410038-126	53-16-51-035	35-410070-20	53-14-01-027
35-400423	52-10-02	35-410038-140	53-16-50-070	35-410070-22	53-14-01-026
35-400435	52-10-01-050	35-410038-142	53-16-50-071	35-410070-24	53-14-01-028
35-400445-2	53-16-50-041	35-410038-144	53-16-50-072	35-410070-26	53-14-01-029
35-400445-6	53-16-50-038	35-410038-148	53-16-50	35-410070-54	52-30-01
35-400445-6	53-16-51-012	35-410038-154	53-16-50-030	35-410070-56	52-30-01
35-400445-6	52-10-02	35-410038-154	53-16-51-060	35-410070-606	52-30-01

PART NUMBER	CHAP/SUB-SECT/UNIT & ITEM	PART NUMBER	CHAP/SUB-SECT/UNIT & ITEM	PART NUMBER	CHAP/SUB-SECT/UNIT & ITEM
35-410070-608	52-30-01	35-410217-44	53-17-02-027	35-410291-205	56-10-10
35-410070-81	52-30-01	35-410217-46	53-17-02-028	35-410291-207	56-10-10
35-410070-85	52-30-01	35-410217-46	53-17-01	35-410291-209	56-10-10
35-410070-87	52-30-01	35-410217-48	53-17-01-013	35-410291-211	56-10-10
35-410070-89	52-30-01	35-410217-49	53-17-01	35-410291-213	56-10-10-023
35-410070-89	53-32-01-045	35-410217-53	53-17-01	35-410291-215	56-10-10-024
35-410070-91	52-30-01	35-410225-2	53-14-01-020	35-410291-217	56-10-10-022
35-410070-93	52-30-01	35-410225-3	53-14-01	35-410291-219	56-10-10-025
35-410070-97	52-30-01	35-410258	53-17-50-006	35-410291-221	56-10-10-021
35-410070-99	52-30-01-001	35-410259-14	53-15-01-003	35-410291-229	56-10-10
35-410077-12	32-20-30-006	35-410259-16	53-32-01-043	35-410291-231	56-10-01
35-410094-10	25-22-02	35-410259-16	53-30-01-030	35-410291-232	56-10-01
35-410152	53-16-50	35-410259-18	53-30-01-031	35-410291-235	56-10-10
35-410153	53-16-50	35-410259-18	53-32-01	35-410291-243	56-10-10
35-410154-3	21-22-20-046	35-410259-18	53-15-01	35-410291-245	52-20-01-024
35-410154-3	21-22-30-028	35-410259-22	53-15-01-001	35-410291-4	56-10-01-003
35-410154-3	21-22-10-038	35-410259-22	27-10-01-036	35-410291-46	25-23-01-001
35-410158-10	53-14-01-021	35-410259-24	27-10-01	35-410291-631	52-20-01
35-410158-11	53-14-01	35-410259-30	53-15-01-022	35-410291-632	52-20-01
35-410158-11	53-14-50-027	35-410259-43	53-15-01	35-410291-641	52-20-01
35-410158-12	53-14-50-028	35-410259-602	53-17-01-001	35-410291-642	52-20-01
35-410158-12	53-17-50-020	35-410259-604	53-15-01	35-410291-72	52-20-01
35-410158-16	53-17-50-017	35-410260	53-17-01-006	35-410291-72	25-23-01-004
35-410158-16	27-20-01	35-410278	53-15-01-002	35-410291-73	25-23-01
35-410158-16	27-10-01-039	35-410278	27-10-01-037	35-410291-73	52-20-01
35-410158-20	53-17-50-008	35-410279	53-15-01	35-410291-8	56-10-01-001
35-410160-32	53-18-01-011	35-410279-1	53-15-01	35-410291-80	25-23-01-002
35-410160-32	52-32-01-022	35-410279-2	53-15-01-058	35-410291-81	25-23-01
35-410167	53-17-50-015	35-410279-3	53-15-01-059	35-410291-88	56-10-10-005
35-410169B-C	11-20-01-004	35-410286	36-10-10-024	35-410291-88	56-10-01-004
35-410169W-C	11-20-01	35-410286	53-30-01	35-410291-90	56-10-01-016
35-410169W-C	11-20-10-008	35-410286B-C	11-20-01-003	35-410291-90	56-10-10-017
35-410170-1	53-14-50-023	35-410286B-C	11-20-10-002	35-410291-96	56-10-01
35-410170-16	53-15-01-014	35-410286W-C	11-20-01	35-410315	52-10-01
35-410170-2	53-14-50	35-410286W-C	11-20-10	35-410315	56-10-10-002
35-410170-2	53-14-01-014	35-410287	53-16-50-004	35-410315	56-10-10-040
35-410170-4	53-14-01-015	35-410287	53-16-51-044	35-410316	52-20-01-022
35-410170-4	53-14-50-024	35-410291-102	52-20-01-025	35-410316-1	52-20-01
35-410175	11-30-01-049	35-410291-106	52-20-01-008	35-410317	52-20-01-017
35-410175	25-22-02	35-410291-11	56-10-01	35-410318	56-10-01-005
35-410176	53-16-50	35-410291-114	52-20-01	35-410321-7	56-10-01-015
35-410176	53-16-51-004A	35-410291-130	52-20-01-004	35-410321-7	56-10-10-016
35-410177	53-16-50-003	35-410291-131	52-20-01	35-410323	52-20-01-023
35-410177	53-16-51-043	35-410291-132	56-10-10-004	35-410324	56-10-10
35-410180-12	53-16-51	35-410291-132	56-10-01	35-410324	56-10-01
35-410180-12	53-16-50	35-410291-136	56-10-01	35-410324-2	56-10-01-009
35-410180-12	53-14-50	35-410291-136	56-10-10	35-410324-2	56-10-10-010
35-410180-12	53-14-01	35-410291-142	56-10-01-019	35-410324-4	56-10-10-011
35-410180-14	53-14-01	35-410291-142	56-10-10-020	35-410324-4	56-10-01-010
35-410180-14	52-32-01-033	35-410291-144	52-20-01-005	35-410325	56-10-01-011
35-410180-14	52-30-01-016	35-410291-145	52-20-01	35-410325	56-10-10-012
35-410180-14	53-14-50	35-410291-146	52-20-01-001	35-410326	11-30-10-061
35-410180-6	53-14-50-035	35-410291-146	56-10-10-044	35-410329	11-30-10-062
35-410180-6	53-14-01-023	35-410291-146	56-10-01-020	35-410329	11-30-01-053
35-410180-8	53-14-50	35-410291-147	56-10-01	35-410329 B-C	52-20-01
35-410180-8	53-14-01	35-410291-147	56-10-10	35-410329 W-C	52-20-01-026
35-410198-1	53-14-50	35-410291-147	52-20-01	35-410330-10	53-15-01-007
35-410210-12	53-15-01-050	35-410291-16	52-20-01-006	35-410330-12	53-15-01-008
35-410210-24	53-14-50-021	35-410291-164	56-10-01	35-410330-2	53-15-01-006
35-410210-24	53-14-01-011	35-410291-165	56-10-01	35-410330-5	53-15-01
35-410210-25	53-14-01	35-410291-17	52-20-01	35-410330-6	53-15-01-005
35-410210-25	53-14-50-022	35-410291-170	25-23-01	35-410330-602	53-15-01
35-410211-2	53-16-51-007	35-410291-175	25-23-01-003	35-410330-603	53-15-01
35-410211-2	53-16-50-046	35-410291-175	56-10-10-041	35-410330-7	53-15-01
35-410214-5	52-30-01-003	35-410291-18	52-20-01-007	35-410355	11-30-10-012
35-410214-5	52-32-01-003	35-410291-189	56-10-10-019	35-410365	53-30-01
35-410217-16	53-14-01	35-410291-189	56-10-01-018	35-410369-2	53-18-01-001
35-410217-18	53-14-01-013	35-410291-193	56-10-01-017	35-410369-3	53-18-01
35-410217-26	53-17-01-029	35-410291-193	56-10-10-018	35-410369-4	53-18-01-002
35-410217-28	53-17-01-031	35-410291-199	56-10-01	35-410369-5	53-18-01
35-410217-40	53-17-01-015	35-410291-201	56-10-01	35-410369-6	53-18-01-003
35-410217-44	53-17-01-027	35-410291-203	56-10-10	35-410369-7	53-18-01

PART NUMBER	CHAP/SUB-SECT/UNIT & ITEM	PART NUMBER	CHAP/SUB-SECT/UNIT & ITEM	PART NUMBER	CHAP/SUB-SECT/UNIT & ITEM
35-410370	53-18-01-039	35-415310-2	52-20-01	35-524138-2	27-20-20-074
35-410370-1	53-18-01	35-415311-1	52-20-01-019	35-524139	27-10-20
35-410420-14	25-28-01-009	35-415312-3	52-20-01-011	35-524139	27-10-20
35-410420-16	25-28-01-010	35-415312-4	52-20-01	35-524141	27-10-20
35-410435	52-10-02-076	35-415330-12	53-13-01-022	35-524141	27-10-20-006
35-410435	52-10-01-071	35-415330-30	53-13-01-023	35-524143-2	27-20-20-021
35-410436	52-10-01-072	35-415330-40	53-13-01-024	35-524143-6	27-20-20
35-410436	52-10-02-077	35-415330-64	53-13-01-005	35-524144	27-20-20
35-410444-19	53-14-50-033	35-415330-65	53-13-01	35-524144-8	27-20-20-065
35-410444-19	53-14-01	35-415330-66	53-13-01-026	35-524171	27-20-20-039
35-410444-21	53-15-01-016	35-415330-82	53-11-01	35-524171	27-20-20-006
35-410444-25	53-10-01-072	35-415330-82	53-10-01-065	35-524175	27-10-01-014
35-410444-31	53-16-50	35-415332-2	53-13-01-027	35-524183	27-20-20-032
35-410444-32	53-16-50-058	35-415332-4	53-13-01	35-524183-2	27-20-20
35-410444-7	53-16-50-034	35-415332-6	53-13-01	35-524183-2	27-20-20-014
35-410445-15	53-17-01-010	35-415373-14	53-15-01-053	35-524197-4	27-10-20-049
35-410445-19	53-17-01-011	35-415374-12	53-15-01-011	35-524230	27-10-20
35-410445-5	53-17-01-007	35-415374-14	53-15-01-012	35-524230-2	27-10-20-068
35-410445-6	53-17-01	35-415374-16	53-15-01-015	35-524231	27-10-20-069
35-410445-7	53-17-01-016	35-415374-606	53-15-01	35-524238-12	27-10-20-002
35-410452-105	53-30-01	35-415380-10	53-20-01	35-524238-4	27-10-20-001
35-410452-105	53-16-50	35-415380-16	53-20-01-008	35-524240	27-10-20-052
35-410452-165	53-30-01	35-415380-22	53-20-01-012	35-524241	27-10-20-023
35-410452-165	53-32-01	35-415380-22	25-22-01-103	35-524258	27-20-20-063
35-410452-3	53-32-01-021	35-415380-22	25-28-01-006	35-524261-19	27-10-20-025
35-410452-3	53-30-01-012	35-415380-22	25-28-20-007	35-524261-27	27-10-20
35-410452-3	53-16-50-065	35-415380-22	25-28-10-006	35-524262	27-10-20
35-410452-3	53-16-51-048	35-415416	52-30-01-004	35-524274	27-10-20
35-410452-33	53-16-51-054	35-415417-675	53-20-01	35-524274-4	27-10-20-065
35-410452-33	53-16-50-035	35-415417-77	53-20-01-011	35-524300	27-20-20-025
35-410452-35	53-16-50-036	35-420011-123	53-14-01-010	35-524308	27-20-20-007
35-410452-35	53-16-51-016	35-420015-5	53-14-01	35-524308	27-20-20
35-410452-35	52-10-02	35-420016	53-17-02	35-524309	27-10-01-004
35-410452-75	53-16-51-058	35-420017-1	53-17-02	35-524309	53-11-01
35-410452-75	53-16-50-076	35-420035-1	53-14-50	35-524314-10	27-10-01-011
35-410452-75	53-32-01-016	35-420035-3	53-14-50	35-524367-2	27-20-20-054
35-410452-75	53-30-01-021	35-420038-199	53-16-51-022	35-524367-3	27-20-20-055
35-410452-9	53-30-01	35-5010-3	23-60-01-001	35-524368	27-20-20
35-410452-9	53-16-50-066	35-521152	27-10-01	35-524542-10	27-30-20-005
35-410455-1	21-22-10-035	35-521152-4	27-10-01-049	35-524553	27-30-20-013
35-410455-1	21-22-30-031	35-521158-2	27-10-01-060	35-524554	27-30-20-015
35-410455-1	21-22-20-043	35-521158-3	27-10-01	35-524554	53-25-01
35-410456-11	52-10-01-018	35-521158-7	27-10-01	35-524585-10	27-10-20
35-410456-11	52-10-02-017	35-521158-8	27-10-01	35-524585-8	27-10-20
35-410456-13	52-10-02-022	35-521190	27-10-01-053	35-524587	27-10-20-005
35-410456-13	52-10-01-026	35-521213-3	27-50-01-017	35-524587-2	27-10-20
35-410456-27	53-16-50-051	35-521215	27-50-01-013	35-524641	27-20-20-048
35-410456-27	53-16-51-063	35-521227	27-50-10-034	35-524665	27-20-20
35-410456-29	53-16-50-054	35-521230	27-50-01-008	35-524665	27-20-20
35-410456-3	52-10-01-011	35-521230-2	27-50-01-007	35-524666-1	27-20-20-034
35-410456-3	52-10-02-031	35-524003	27-30-01-048	35-524666-1	27-20-20-001
35-410456-31	52-10-02-023	35-524003	27-20-01-025	35-524666-2	27-20-20-002
35-410456-31	52-10-01-012	35-524011	27-20-20-008	35-524666-2	27-20-20-035
35-410456-5	52-10-01-025	35-524011	27-20-20-049	35-530025-15	25-13-30-005
35-410456-5	52-10-02-032	35-524018	27-20-20-060	35-534052	25-22-02-002
35-410456-601	52-10-01	35-524038	27-10-20-070	35-534052	25-28-20
35-410456-601	52-10-02	35-524047	27-10-20-060	35-534052	25-28-10
35-410456-7	52-10-02-024	35-524048	27-10-20	35-534052	25-28-01
35-410456-7	52-10-01-023	35-524048	27-10-20	35-534057-8	52-20-01-015
35-410465-1	56-10-10-006	35-524051-1	27-10-20	35-534061	52-20-01-012
35-410465-1	56-10-01	35-524066	27-20-20	35-534063	52-20-01-016
35-410473-31	53-16-50-024	35-524066-2	27-20-20-071	35-534064	52-20-01-014
35-410473-32	53-16-50	35-524087	27-10-20	35-534067-2	25-28-20-016
35-410474-49	25-23-01	35-524087-2	27-10-20-024	35-534079-2	25-22-01-099
35-410474-49	56-10-10-003	35-524095-1	27-10-20-018	35-534079-22	25-22-01
35-410474-50	56-10-10	35-524096-1	27-10-20-017	35-534079-4	25-22-01
35-410474-50	25-23-01	35-524125-10	27-10-20-051	35-534079-604	25-22-01
35-410474-59	56-10-01	35-524125-12	27-10-20	35-534079-604	25-23-01
35-410474-75	56-10-01-002	35-524136	27-20-20-078	35-534090-26	25-23-01
35-415309-1	52-20-01-021	35-524136	53-10-01-069	35-534090-26	25-22-01-102
35-415309-2	52-20-01	35-524136	53-11-01	35-534098	11-30-10-006
35-415310-1	52-20-01-018	35-524138	27-20-20	35-534157	25-13-10-024

PART NUMBER	CHAP/SUB-SECT/UNIT & ITEM	PART NUMBER	CHAP/SUB-SECT/UNIT & ITEM	PART NUMBER	CHAP/SUB-SECT/UNIT & ITEM
35-534157	25-20-10-054	35-534372-39	25-23-01-093	35-534409-1C	25-22-01-140
35-534191-15 C	25-28-10-004	35-534372-39	25-23-01-076	35-534410-13	39-10-01
35-534191-15C	25-22-01-110	35-534372-39	25-22-05	35-534410-13	39-10-20
35-534192-10	25-22-02-031	35-534372-41	25-22-05-132	35-534412	25-22-07-017
35-534192-12	25-22-02-032	35-534372-43	25-23-01-079	35-534412	25-22-01-067
35-534192-14	25-22-02	35-534372-43	25-23-01-095	35-534412	25-22-05-012
35-534201-2	25-22-02-027	35-534372-45	25-23-01-094	35-534413-19	52-10-01-068
35-534201-2	25-22-01-028A	35-534372-45	25-23-01-077	35-534413-23	53-14-01
35-534201-2	25-22-05-023	35-534372-45	25-22-05	35-534413-45	53-14-01-031
35-534201-3	25-22-01-031A	35-534372-47	25-23-01	35-534413-45	53-14-50
35-534201-3	25-22-05-076	35-534372-47	25-23-01	35-534413-47	25-22-01
35-534201-3	25-22-02-062	35-534372-49	25-22-05	35-534415-5	25-22-05
35-534202-2	25-22-02-028	35-534372-5	25-22-05-130	35-534415-7	52-10-01-063
35-534202-2	25-22-01-028B	35-534372-65	25-23-01-069	35-534415-9	25-22-05
35-534202-2	25-22-05-024	35-534372-65	25-23-01-084	35-534417	25-22-03-033
35-534202-3	25-22-01-031B	35-534372-67	25-23-01-085	35-534420-25	25-22-03-022
35-534202-3	25-22-05-077	35-534372-67	25-23-01-070	35-534420-27	25-22-03
35-534202-3	25-22-02-061	35-534372-69	25-23-01-081	35-534420-29	25-22-03-023
35-534220-19	25-22-01-133	35-534372-7	25-23-01-067	35-534420-35	25-22-03
35-534220-23	25-22-01-132	35-534372-71	25-23-01-083	35-534420-37	25-22-03-024
35-534220-27C	25-22-01-131	35-534372-75	25-23-01	35-534420-41	25-22-03
35-534221-15C	25-22-01-134	35-534372-77	25-22-05	35-534420-43	25-22-03-025
35-534222-17	25-22-01-138	35-534372-79	25-22-05	35-534420-49	25-22-05-018
35-534222-19C	25-22-01-137	35-534372-81	25-22-05	35-534420-49	25-22-01-052
35-534226	25-22-01-136	35-534372-81	25-22-05	35-534420-53	25-22-03
35-534227	25-22-01-135	35-534372-83	25-23-01	35-534420-55	25-22-03
35-534229	25-22-01-139	35-534372-85	25-22-05-134	35-534420-57	25-22-03-019
35-534242	25-23-01-065	35-534372-89	25-23-01	35-534420-63	25-22-03-018
35-534244-1	25-22-01-096A	35-534372-91	25-22-05-135	35-534420-65	25-22-03
35-534244-1	25-22-05-035	35-534372-93	25-23-01	35-534420-67	25-22-03-044
35-534300-238	25-22-02-073	35-534372-99	25-22-05-133	35-534420-81	53-16-51
35-534304-12	53-20-01-013	35-534382	25-22-02-034	35-534420-81	53-16-50
35-534304-624	25-28-10	35-534382	25-22-01-095	35-534420-81C	25-22-01-062
35-534304-624	25-28-01-001	35-534382	25-22-01	35-534420-83	25-22-03
35-534304-626	25-28-01-002	35-534382	25-22-01	35-534420-83C	25-22-01-063
35-534304-626	25-28-10	35-534382	11-30-01-005	35-534420-83C	25-22-05-078
35-534304-627	25-28-10	35-534394-11	25-22-02-040	35-534420-85	25-22-03
35-534304-627	25-28-01	35-534394-11	25-22-03-040	35-534420-85C	25-22-05-079
35-534304-638	53-20-01	35-534394-27	25-22-02-046	35-534420-85C	25-22-01-064
35-534304-650	53-20-01	35-534394-27	25-22-03	35-534425-1	25-13-10
35-534304-652	53-20-01	35-534394-31	25-22-03	35-534425-11	25-13-10
35-534304-79	25-22-02-075	35-534394-31	25-22-02-047	35-534425-11	25-20-10
35-534304-79	25-22-03	35-534394-33	25-22-02-048	35-534425-13	25-20-10
35-534304-93	25-22-03-039	35-534394-33	25-22-03	35-534425-13	25-13-10
35-534304-93	25-22-05-048	35-534394-37	25-22-03	35-534425-19	25-13-10
35-534304-93	25-22-01-089	35-534394-37	25-22-03	35-534425-2	25-13-10
35-534305-39	25-28-01-005	35-534394-37	25-22-02-084	35-534425-20	25-13-10
35-534305-39 C	25-28-10-005	35-534394-39	25-22-03	35-534425-21	25-20-10
35-534305-39C	25-22-01-107	35-534394-39	25-22-02-049	35-534425-22	25-20-10
35-534305-55	25-22-01-105	35-534394-41	25-22-02-085	35-534425-23	25-20-10
35-534305-55	25-28-10-002	35-534394-47	25-22-02-041	35-534425-23	25-13-10
35-534305-55	25-28-20-005	35-534394-47	25-22-03-041	35-534425-25	25-20-10
35-534305-55	25-28-01-004	35-534394-53	25-22-03-042	35-534425-25	25-13-10
35-534305-605	25-23-01	35-534394-53	25-22-02-042	35-534425-27	25-13-10
35-534305-624	53-20-01	35-534394-601	25-22-02	35-534425-27	25-20-10
35-534305-625	53-20-01	35-534394-601	25-22-03	35-534425-27	25-21-20-023
35-534305-65	25-28-01	35-534394-602	25-22-03	35-534425-29	25-21-20-019
35-534306-31	25-22-02-082	35-534394-603	25-22-02	35-534425-29	25-20-10
35-534306-31	25-22-01-061	35-534399	25-22-05	35-534425-29	25-13-10
35-534308-43	25-23-01-064	35-534399	25-23-01	35-534425-3	25-20-10
35-534315	25-22-02	35-534399	25-23-01	35-534425-4	25-20-10
35-534315	25-22-03	35-534399-1	25-23-01-057	35-534425-602	25-13-10
35-534352-3	11-30-10-063	35-534399-3	53-16-51	35-534425-603	25-20-10
35-534352-3	11-30-01-054	35-534399-3	25-22-01	35-534425-604	25-20-10
35-534352-3	52-20-01	35-534402	11-30-01	35-534425-606	25-13-10
35-534372-1	25-23-01-066	35-534405-1	25-22-01-141	35-534425-607	25-20-10
35-534372-25	25-22-05-131	35-534406-33	25-22-03	35-534425-608	25-20-10
35-534372-31	25-22-05	35-534406-37	25-22-03	35-534425-9	25-21-20-022
35-534372-33	25-23-01-082	35-534406-69	25-23-01	35-534426-1	25-20-10
35-534372-33	25-23-01-068	35-534406-71	25-23-01	35-534426-1	25-13-10
35-534372-37	25-23-01-074	35-534406-85	25-23-01	35-534426-2	25-13-10
35-534372-37	25-23-01-090	35-534406-87	25-22-03-035	35-534426-2	25-20-10

PART NUMBER	CHAP/SUB-SECT/UNIT & ITEM	PART NUMBER	CHAP/SUB-SECT/UNIT & ITEM	PART NUMBER	CHAP/SUB-SECT/UNIT & ITEM
35-534432-5	25-21-20-017	35-550561-41	21-22-01-032	35-650122-8	55-20-01-017
35-534439	11-30-10	35-550561-43	21-22-01-045	35-660033	53-18-01-088
35-534440-5	11-30-10-018	35-550561-45	21-22-01-044	35-660033	27-20-01-029
35-534441-5	11-30-10	35-550561-47	21-22-01	35-810075-11	32-30-20-011
35-534452-1	25-23-01	35-550561-49	21-22-01-054	35-810076-3	32-30-20-025
35-534452-1	25-23-01	35-550561-5	21-22-01-028	35-810077-3	32-30-20-028
35-534452-3	25-23-01	35-550561-53	21-22-01-050	35-810083	32-30-20-021
35-534452-3	25-23-01	35-550561-53	21-22-20-018	35-810087	32-30-20-018
35-534452-5	25-23-01-023	35-550561-607	21-22-01	35-810088	32-30-20-020
35-534452-5	25-23-01	35-550561-9	21-22-01-048	35-810091	32-30-20-033
35-534452-7	25-23-01	35-550562-21	21-22-01-002	35-810094	32-30-20
35-534452-7	25-23-01-022	35-550562-33	21-22-01	35-810094-2	32-30-20-003
35-534452-9	25-23-01-025	35-550562-35	21-22-01	35-810094-6	32-30-20-004
35-534452-9	25-23-01	35-550562-37	21-22-01	35-810095	32-30-20-006
35-534453-1	25-20-20	35-550562-39	21-22-01-014	35-810117	32-30-20-024
35-534453-1	25-13-40	35-550562-41	21-22-01-021	35-810119	32-30-20-017
35-534453-1	25-13-30-058	35-550562-43	21-22-01-016	35-810132	32-30-20
35-534453-3	25-13-30	35-550562-45	21-22-01	35-810132	27-50-01
35-534453-3	25-13-40-044	35-550562-51	21-22-01-009	35-810132-2	27-50-01-032
35-534453-3	25-20-20	35-550562-59	21-22-01-025	35-810132-2	32-30-20-046
35-534453-3	25-20-20-033	35-550562-601	21-22-01	35-810133	32-30-20-047
35-534453-4	25-20-20	35-550562-603	21-22-01	35-810133	27-50-01-031
35-534453-4	25-13-40	35-550562-607	21-22-01	35-810134	32-30-20-009
35-534456-1	56-20-01	35-550562-609	21-22-01	35-810134-1	32-30-20
35-534456-2	56-20-01	35-550562-61	21-22-01-015	35-810135	32-30-20-036
35-534456-3	56-20-01	35-550562-65	21-22-01	35-810136	32-30-20-032
35-534456-3	25-23-01-005A	35-550562-67	21-22-01-017	35-810141-5	32-30-20-013
35-534456-4	25-23-01	35-550562-87	21-22-01-019	35-810142	32-30-20-007
35-534456-4	56-20-01	35-550562-87	21-22-01-012	35-810147	32-30-20-026
35-534456-5	56-20-01	35-550562-91	21-22-01-010	35-810150-2	32-10-10-040
35-534456-6	56-20-01	35-550562-97	21-22-01-001	35-810170	32-10-20
35-534460-1	56-20-01	35-550567-29	21-20-10	35-810171	32-10-20
35-534494-601	25-22-03	35-560001-15	35-00-23	35-815001-8	32-10-10-046
35-550024-4	53-13-01-011	35-560001-21	35-00-24-021	35-815004	32-10-10-056
35-550024-5	53-13-01	35-560001-21	35-00-23-015	35-815004	32-10-20-048
35-550024-6	21-20-10-006	35-560001-25	35-00-23-011	35-815004-1	32-10-20
35-550024-7	21-20-10	35-560001-25	35-00-24-038	35-815004-1	32-10-10
35-550036	53-13-01-012	35-560001-49	35-00-24-022	35-815006-12	32-40-30-001
35-550042	21-20-10-021	35-560001-49	35-00-23-014	35-815006-13	32-40-30-002
35-550042	21-20-01-014	35-560001-61	35-00-23	35-815006-24	32-40-30-020
35-550055	21-22-01	35-560001-7	35-00-23	35-815006-24	32-40-30-074
35-550057	21-22-01-037	35-590006	25-10-01-003	35-815006-24	32-40-31
35-550058-2	21-22-01-042	35-590058	25-10-01-006	35-815006-8	32-40-30-031
35-550058-6	21-22-01-041	35-590070-15	52-10-01-037	35-815007-4	32-30-01
35-550059	21-22-01-034	35-590070-33	52-10-01	35-815007-6	32-30-01-033
35-550060	21-22-01-036	35-590070-39	24-00-01-007	35-815016	32-10-30
35-550061	21-22-01-035	35-590070-43	52-10-01	35-815016-1	32-10-30
35-550062	21-22-01-039	35-590070-65	52-10-02	35-815016-2	32-10-30-009
35-550062-2	21-22-01	35-590070-65	52-35-02-015	35-815016-3	32-10-30
35-550063	21-22-01-040	35-590070-71	52-10-02	35-815020	32-30-20-014
35-550075	21-22-01	35-590080	71-60-01-078	35-815022	32-10-10-007
35-550096-3	21-20-10-007	35-590080	71-60-01-082	35-815023	32-10-20-055
35-550096-3	53-13-01-014	35-590080	25-10-01	35-815023	32-10-10-059
35-550096-4	53-13-01	35-590080	25-10-01	35-815023-1	32-10-20
35-550096-4	21-20-10	35-590080	11-20-01-033	35-815037	32-40-31-058
35-550097-1	21-20-10-005	35-590099-29	52-30-01-006	35-815037	32-40-30-055
35-550097-2	21-20-10	35-590099-35	52-30-01-007	35-815037	32-40-30-019
35-550097-3	53-13-01-013	35-600003	55-10-01	35-815038	32-10-10-052
35-550097-4	53-13-01	35-600003	55-11-01	35-815043	32-10-10-054
35-550501-14	30-40-10-020	35-650005-31	55-10-01-040	35-815044	32-10-10
35-550501-20	30-40-10-015	35-650005-45	55-11-01-036	35-815048	32-40-31
35-550520	21-22-20-059	35-650005-45	55-10-01-012	35-815048	32-40-30-004
35-550520	21-22-10-051	35-650005-46	55-10-01-013	35-815055	32-10-30
35-550561	53-16-50	35-650005-46	55-11-01	35-815055-1	32-10-30
35-550561-11	21-22-01-047	35-650005-7	55-11-01-029	35-815055-114	32-10-30-015
35-550561-13	21-22-01	35-650005-7	55-10-01-025	35-815055-115	32-10-30
35-550561-15	21-22-01-046	35-650005-8	55-10-01	35-815055-116	32-10-30-020
35-550561-19	21-22-01	35-650005-8	55-11-01	35-815055-118	32-10-30-017
35-550561-29	21-22-01	35-650121-4	55-10-01-016	35-815055-119	32-10-30
35-550561-33	21-22-01-029	35-650121-8	55-20-01-018	35-815055-120	32-10-30-016
35-550561-35	21-22-01-026	35-650121-8	55-21-01-020	35-815055-121	32-10-30
35-550561-37	21-22-01-027	35-650122-8	55-21-01-019	35-815055-122	32-10-30-021

PART NUMBER	CHAP/SUB-SECT/UNIT & ITEM	PART NUMBER	CHAP/SUB-SECT/UNIT & ITEM	PART NUMBER	CHAP/SUB-SECT/UNIT & ITEM
35-815055-124	32-10-30-022	35-815192-17	32-10-10-019	35-820094-2	27-20-20-042
35-815055-158	32-10-30	35-815192-17	32-10-20-040	35-820094-4	27-20-20-043
35-815055-158	32-10-30	35-815192-21	32-10-10-021	35-820094-4	32-30-10-048
35-815055-159	32-10-30	35-815192-23	32-10-10-013	35-820095	27-20-20-040
35-815055-159	32-10-30	35-815192-25	32-10-10	35-820107	32-20-10
35-815055-164	32-10-30-005	35-815192-26	32-10-10	35-820107	32-20-05
35-815055-165	32-10-30	35-815192-27	32-10-10	35-820107-1	32-20-05-017
35-815055-36	32-10-30-018	35-815192-3	32-10-10	35-820107-1	32-20-10-011
35-815055-37	32-10-30	35-815192-37	32-10-10-020	35-820115	32-20-10-047
35-815055-42	32-10-30-023	35-815192-37	32-10-20-041	35-820115	32-20-05-044
35-815055-62	32-10-30-025	35-815192-4	32-10-10	35-820123	32-20-10-012
35-815055-63	32-10-30-026	35-815192-41	32-10-10	35-820123	32-20-10-024
35-815055-64	32-10-30-014	35-815192-5	32-10-20	35-820123	32-20-05-018
35-815055-65	32-10-30	35-815192-5	32-10-10	35-820123	32-20-05-013
35-815055-68	32-10-30-011	35-815192-6	32-10-10	35-820125	32-20-10
35-815055-69	32-10-30	35-815192-6	32-10-20	35-820125	32-20-20-051
35-815056	32-10-30	35-815192-601	32-10-10	35-820130-2	32-20-10-050
35-815056-2	32-10-30-029	35-815194	32-10-10	35-820130-2	32-20-05-030
35-815056-4	32-10-30-031	35-815194	32-10-20	35-820133	32-20-10-060
35-815069	32-40-31	35-815194-1	32-10-20-025	35-820134	32-20-10-037
35-815069	32-40-30-025	35-815194-1	32-10-10-033	35-820134	32-20-05-032
35-815077-10	32-30-01-046	35-815194-11	32-10-20	35-820135	32-20-05-042
35-815077-11	32-30-01	35-815194-13	32-10-20	35-820135	32-20-10-043
35-815077-12	32-30-01	35-815194-3	32-10-20	35-825005	32-50-01-045
35-815077-13	32-30-01	35-815194-5	32-10-20	35-825006	32-50-01
35-815077-14	32-30-01	35-815194-7	32-10-20	35-825006-2	32-50-01-039
35-815077-15	32-30-01	35-815194-9	32-10-20	35-825007	32-50-01
35-815077-4	32-30-01-047	35-815196-15	32-10-10	35-825007-2	32-50-01-042
35-815077-5	32-30-01	35-815196-25	32-10-10	35-825035	32-50-01
35-815077-8	32-30-01	35-815196-25	32-10-20	35-825035-2	32-50-01-033
35-815077-9	32-30-01	35-815196-605	32-10-10	35-825044-4	32-50-01
35-815078	32-30-01-036	35-815196-605	32-10-01-001	35-825044-6	32-50-01-002
35-815081	32-10-10-010	35-815196-606	32-10-01	35-825045	32-50-01-047
35-815088-16	32-10-10-023	35-815196-606	32-10-10	35-825046	32-50-01-053
35-815088-18	32-10-10	35-815196-616	32-10-10	35-825046	32-50-01-035
35-815088-4	32-10-10-022	35-815196-616	32-10-01	35-825049	32-50-01-011
35-815095	32-40-31-062	35-815196-617	32-10-01	35-825051	32-50-01-015
35-815095	32-40-30-026	35-815196-617	32-10-10	35-825052	32-50-01
35-815101-5	32-30-01-044	35-815196-691	32-10-10	35-825052-2	32-50-01-012
35-815102-20	32-30-01	35-815196-691	32-10-01	35-825054-5	32-50-01-049
35-815102-21	32-30-01	35-815196-692	32-10-01	35-825054-5	27-20-20-010
35-815109	32-30-01-040	35-815196-692	32-10-10	35-825074-1	32-30-10-014
35-815115	32-30-01-049	35-815197-1	32-10-10-006	35-825076-1	32-30-10-028
35-815118	53-17-01	35-815197-2	32-10-10	35-825087-14	32-30-10
35-815125-12	32-30-01-006	35-815245-1	32-10-20-042	35-825087-16	32-30-10
35-815125-14	32-30-01	35-815246-1	32-10-20-002	35-825094-4	32-30-10-052
35-815125-2	32-30-01	35-815246-11	32-10-20-005	35-825097	32-50-01-004
35-815125-4	32-30-01	35-815246-13	32-10-20	35-825111	27-20-20-041
35-815125-602	32-30-01	35-815246-3	32-10-20	35-825128-7	32-20-20
35-815125-604	32-30-01	35-815246-5	32-10-20	35-825145-2	32-20-20-023
35-815129	32-30-01	35-815246-7	32-10-20	35-825145-2	32-20-10-025
35-815131	32-30-01-008	35-815246-9	32-10-20-003	35-825145-2	32-20-05-024
35-815147	53-25-01-071	35-815247-9	32-10-20-038	35-825145-2	32-50-10
35-815148-9	53-25-01	35-815249-1	32-10-20	35-825146	32-50-10-001
35-815148-9	11-30-01-022	35-815249-3	32-10-20	35-825147	32-50-10-005
35-815148-9	11-30-01-052	35-815251-1	32-10-20	35-825148	32-50-10-002
35-815149-9	11-30-10-002	35-815251-3	32-10-20-012	35-825151	32-50-10-007
35-815153	11-20-10-006	35-815252-1	32-10-20-013	35-825152	32-50-10-003
35-815153	11-20-01	35-815252-3	32-10-20-014	35-825160	32-50-01
35-815155-610	32-30-01-015	35-815256	32-10-20-009	35-825160-601	32-50-01
35-815155-611	32-30-01	35-815260-1	32-10-20-001	35-825161	32-50-01
35-815156-4	32-30-01-051	35-815260-2	32-10-20	35-825162	32-50-01
35-815156-5	32-30-01	35-815260-3	32-10-20	35-825162-2	32-50-01-019
35-815180	32-40-30	35-815260-4	32-10-20	35-825163	32-50-01-023
35-815180-2	32-40-30-038	35-815264-1	32-10-10-086	35-825164	32-50-01-026
35-815180-2	32-40-31	35-815264-1	32-10-20-050	35-825165	32-50-01-024
35-815180-4	32-40-31-002	35-815264-2	32-10-20	35-825170	32-50-01-008
35-815180-6	32-40-31-003	35-815264-2	32-10-10	35-825171-1	32-50-01-007
35-815180-6	32-40-30-039	35-815266-1	32-10-30-006	35-825172-2	32-30-20-040
35-815180-8	32-40-31	35-815266-2	32-10-30	35-825173	32-50-01
35-815192-11	32-10-10-008	35-820094	32-30-10-041	35-825173-2	32-50-01-030
35-815192-15	32-10-10-009	35-820094-2	32-30-10-047	35-825175-12	32-20-10-005

PART NUMBER	CHAP/SUB-SECT/UNIT & ITEM	PART NUMBER	CHAP/SUB-SECT/UNIT & ITEM	PART NUMBER	CHAP/SUB-SECT/UNIT & ITEM
35-825185-18	32-30-10	35-910066-45	71-60-01-056	36-500004-51	27-10-20-035
35-825188	32-30-10-053	35-910066-77	71-60-01-062	36-530011-17	25-21-30-002
35-825191-1	32-30-10	35-910066-77	71-60-01-065	36-530011-23	25-28-20-019
35-825191-3	32-30-10	35-910066-77	71-62-01-034	36-530011-25	25-28-20
35-825191-5	32-30-10-021	35-910066-77	71-62-01-030	36-530011-26	25-28-20
35-825191-7	32-30-10	35-910066-97	71-62-01-028	36-530011-35	25-21-30-001
35-825192	32-30-10-061	35-910066-97	71-62-01-033	36-530011-37	25-21-30
35-825192	11-20-01-023	35-910066-97	71-60-01-066	36-530011-41	25-21-30
35-825193	32-20-10	35-910066-97	71-60-01-063	36-530011-42	25-21-30
35-825193	32-20-05	35-910066-99	71-60-01-064	36-530020-13	25-21-30-016
35-825193-1	32-20-05-012	35-910066-99	71-60-01-067	36-530020-29	25-21-30-028
35-825193-1	32-20-10-021	35-910066-99	71-62-01-035	36-530020-30	25-21-30
35-825195-21	32-20-10	35-910066-99	71-62-01-029	36-530020-31	25-21-30
35-825195-27	32-20-10-057	35-910215	71-60-01-001	36-530020-35	25-21-30-010
35-825195-31	32-20-10	35-910216	71-60-01-005	36-530020-39	25-21-30-022
35-825195-31	32-20-05	35-910216	71-62-01-067	36-530020-41	25-21-30
35-825195-33	32-20-05-023	35-910288	71-64-01-007	36-530021-1	25-21-30
35-825195-33	32-20-10	35-910288	71-66-01-040	36-530023-17	25-21-30-009
35-825195-39	32-20-10	35-910294	71-60-01-002	36-530023-17	25-20-20-037
35-825195-51	32-20-10-056	35-921154-101	57-20-06	36-530023-17	25-13-30-050
35-825195-601	32-20-10	35-921154-95	28-20-01	36-530023-17	25-13-20-059
35-825195-603	32-20-10-059	35-921154-95	28-20-01	36-530023-17	25-13-40-049
35-825195-607	32-20-05	35-921154-97	28-10-10	36-530025-13	25-13-40-018
35-825195-75	32-20-01	35-921154-98	28-10-10	36-530025-13	25-13-20-021
35-825195-79	32-20-05-010	35-921155-101	28-10-10	36-530025-13	25-13-30-018
35-825196-15	32-20-01	35-921155-101	28-10-10	36-530025-14	25-13-30-019
35-825196-21	32-20-01	35-921155-147	28-10-10	36-530025-14	25-13-20-022
35-825196-23	32-20-20	35-921155-148	28-10-10	36-530025-14	25-13-40-019
35-825196-23	32-20-10	35-921503	30-60-01	36-530025-15	25-13-40-005
35-825196-25	32-20-10-063	35-921532	28-10-01	36-530025-15	25-13-20-008
35-825196-25	32-20-20-006	35-921533	28-10-01	36-530025-15	25-20-20-005
35-825196-601	32-20-10	35-924148	11-20-10-014	36-530025-27	25-13-20-019
35-825196-601	32-20-01-001	35-924148B-C	11-20-01-017	36-530025-27	25-13-30-016
35-825196-611	32-20-01	35-924148W-C	11-20-01	36-530025-27	25-13-40-016
35-825196-611	32-20-10	35-924254-5	71-70-01	36-530043-3	25-13-20
35-825196-614	32-20-10	35-924254-5	71-72-01	36-530043-3	25-20-20
35-825196-614	32-20-01	35-924254-5	71-72-01	36-530043-7	25-20-20
35-825196-618	32-20-01	35-924254-9	71-72-01	36-530043-7	25-13-20
35-825196-618	32-20-10	35-924254-9	71-70-01	36-530045-1	25-50-01
35-825196-691	32-20-10	35-924254-9	71-72-01	36-530045-3	25-50-01-003
35-825196-691	32-20-01	35-924259	11-30-01-087	36-530049-5	25-21-30
35-825196-696	32-20-01	35-939181	11-20-01-029	36-530056-15	25-21-30
35-825196-696	32-20-10	35-939181	71-10-01-073	36-530064-19	25-16-30
35-825196-7	32-20-01	35-944047-1	71-72-01-025	36-530064-29	25-16-30
35-9009-1S	28-10-01	35-944051-13	76-10-01-022	36-530064-3	25-16-30
35-9009-2S	28-10-01	35-944051-13	76-12-01-033	36-530064-49	25-16-30-002
35-9009-3S	28-10-01-001	35-950004-17	78-10-01-007	36-530064-57	25-16-30-005
35-9009-4S	28-10-01	350052	61-20-01-057	36-530064-59	25-16-30-003
35-9009S	28-10-01	3502-18-24-0511	32-40-40	36-530064-601	25-16-30
35-9009S	28-10-01	3502-18-24-0511	32-40-41-008	36-530064-603	25-16-30
35-9009S	28-10-01	351-21878-001	39-14-30-007	36-530064-607	25-16-30
35-9009S	28-10-01	351-21878-002	39-14-30-008	36-530064-611	25-16-30
35-910004-7	71-00-01	351-21878-003	39-14-30-005	36-530064-615	25-16-30-001
35-910004-7	71-00-02	351-21878-004	39-14-30-006	36-530064-65	25-16-30-004
35-910004-7	71-00-03	35175A	32-30-30-014	36-530064-67	25-16-30-006
35-910004-7	71-02-01-033	3536-18	32-40-40-013	36-530071-1	25-21-30
35-910004-7	71-02-02-038	357004	39-10-30	36-580000-15	32-40-31-064
35-910016-165	71-62-01-039	36-340081-1	25-60-01	36-580011	32-40-31-015
35-910066-101	71-60-01-068	36-340081-11	25-60-01	36-590015-1	25-10-01
35-910066-107	71-60-01	36-340081-13	25-60-01-003	36-590015-3	25-10-01-008
35-910066-135	71-60-01-072	36-340081-15	25-60-01	36-590015-9	25-10-01-009
35-910066-165	71-60-01-073	36-340081-17	25-60-01	36-8002-1	32-40-10
35-910066-165	71-60-01-046	36-340081-19	25-60-01-005	36-8002-1	32-20-10
35-910066-165	71-60-01-057	36-340081-7	25-60-01	36-8002-1	32-20-20-005
35-910066-165	71-62-01-014	36-340081-9	25-60-01	36-8002-1	32-20-05-007
35-910066-183	71-60-01-069	36-340082-5	25-60-01-002	36-8002-3	32-40-10-010
35-910066-187	71-60-01	36-340082-7	25-60-01	36-8002-5	32-40-10-012
35-910066-193	71-60-01-070	36-364019-1	33-11-10	36-810011	32-10-20
35-910066-241	71-60-01-058	36-380000-3	24-00-01-016	36-810012	32-10-20
35-910066-241	71-62-01-038	36-400011-107	53-20-01-015	36-820011-9	32-30-10-036
35-910066-41	71-60-01-060	36-400026-1	53-14-50-025	36-820012	11-20-01
35-910066-43	71-60-01-045	36-400026-3	53-14-50-026	36-820019-603	32-20-01

PART NUMBER	CHAP/SUB-SECT/UNIT & ITEM	PART NUMBER	CHAP/SUB-SECT/UNIT & ITEM	PART NUMBER	CHAP/SUB-SECT/UNIT & ITEM
36-820019-603	32-20-05	4002G	71-10-01	416-85	28-10-20
36-820019-603	32-20-10	400433	61-20-01-007	416-85-25	28-10-20
36-820019-9	32-20-05	400433	61-20-02-007	416-85-25	28-10-01-008
36-820020-3	32-20-01	400433	61-20-03-011	416-85-31	28-10-01
36-820020-3	32-20-10	400433	61-22-01-004	4169-143	25-16-20-008
36-820021-3	32-20-05-031	400433	61-22-02-012	4169-143	25-16-30
36-920022-1	28-10-01	4030-063	61-22-02-030	417H2	21-40-60-023
361-000	21-22-40-019	4030-063	61-20-03-031	41731-5	76-12-01
361S1	33-11-10	4032B	28-20-01-044	41731-5	76-12-01
36112	33-49-01-006	404-180074	11-30-01-048	41731-8	76-12-01
3613-033	61-20-03-063	404-180074	32-40-30-040	41731-9	76-12-01
3613-033	61-22-02-048	4050-032	61-22-02-002	4189	27-20-01-033
3618-024	61-22-01-064	4060-523	61-22-01	424	33-11-10
3618-026	61-22-02-059	4060-532	61-20-02	427-8	28-10-20-013
3618-026	61-22-01-057	4060-538	61-20-03	43C2-15K	30-60-01
3686	32-50-01-022	4060-538	61-22-02	431-11	28-10-20-017
37009-5-0080	35-00-23	4060-540	61-22-02-001	431-13	28-10-20-018
37117	28-10-20-031	4060-540	61-20-03-001	431-14	28-10-20-016
37278349	30-10-10-061	4065-2420	30-60-10-027	431-15	28-10-20-025
37572	30-60-01	4065-3180	30-60-10-015	431-18	28-10-20-023
37617-339	28-10-20-030	408-0293-233	27-50-10-012	431-9	28-10-20
37685-2	28-10-20-027	41-0190-1	33-45-01-029	432CW12	36-10-01
37691	28-10-20-029	41-0190-3	33-46-01-011	432CW12	71-02-01
37693	28-10-20-028	41-0832-1	33-49-01-008	432CW12	71-02-02
37825	28-10-20	41-0832-3	33-47-01-006	437-7	21-40-60
37826	28-10-20-055	414-180106A	11-30-01-021	4404-00-1	28-20-01
37827	28-10-20	414-180644-9	25-22-01-091	442CW12	30-10-30-008
38E63-1A	30-10-30-075	414-180644-9	25-22-05	442CW12	36-10-01
3800P5000 OHM	24-00-01	414-180644-9	25-50-01	442CW12	71-02-02
38038	28-10-20-033	414-180657-3	53-17-01	4450-032	61-20-03-002
3810P502	39-10-20-013	414-180657-3	53-17-02	4451-064	61-20-02-001
38104	28-10-20-036	414-180657-3	53-17-50-027	4451-064	61-20-03-009
38105-5	28-10-20-056	414-181500-53	57-20-21-031	4451-076	61-22-01-001
3858-010	61-20-03-007	414-181500-53	57-20-20-025	447A39	21-40-60-035
3888-016	61-20-03-032	414-183955-111	30-40-10-021	45-105117	57-40-01
3888-016	61-22-02-029	414-183963-9	21-40-01-042	45-115004-57	57-20-06-041
39A4240	30-60-01	414-183976-11	21-40-20-015A	45-115004-57	57-20-05-022
39T171-7	21-40-60	414-183976-15	21-40-20	45-115017-4	57-20-10-005
39T178-88	21-40-60	414-183976-17	21-40-20-015	45-115018	57-20-01-016
39109A	32-30-30-022	414-183976-9	21-40-20	45-115018	33-40-01
3951-014	61-20-03-072	414-184040-1	53-50-20-007	45-115018	32-20-10
3951-014	61-22-02-068	414-184040-1	53-50-10-019	45-115019	57-20-10-006
4	71-10-01	414-184040-1	52-35-01-007	45-115019-1	57-20-10
4E1188-3	30-62-01-010	414-184040-11	53-50-10	45-115032-2	57-20-10-010
4E1188-3	30-64-01-010	414-184040-11	53-50-20-014	45-115032-3	57-20-10
4E1387-5	30-64-01-007	414-184040-17	52-35-01	45-115032-4	57-20-10-011
4E1387-5	30-62-01-007	414-184040-19	52-35-01	45-115032-5	57-20-10
4E1513	30-62-01-011	414-184040-19	53-50-20-009	45-115046-4	57-20-10-008
4E1513	30-64-01-011	414-184040-21	52-35-01-009	45-115046-5	57-20-10
4E1881	30-64-01-008	414-184040-7	52-35-01-008	45-115046-6	57-20-10-009
4E1881	30-62-01-008	414-184040-7	53-50-10-017	45-115046-7	57-20-10
4E1923-1	30-62-01-009	414-184040-7	53-50-20-010	45-115053	57-20-06-044
4E1923-1	30-64-01-009	414-184040-9	53-50-20	45-115053	57-40-01
4E1924-1	30-64-01	414-184040-9	53-50-10-022	45-115053	57-20-05-027
4E1924-1	30-62-01	414-184040-9	52-35-01-013	45-115053	57-10-01-015
40-0100-3	33-49-01	414-184040-9	53-11-01-068	45-115053-1	57-10-01
40-0127-1	55-40-01-031	414-184040-9	53-11-01	45-115053-1	57-20-05
40-0127-1	33-47-01	414-189412	24-00-01	45-115053-1	57-20-06
40-98	32-10-20	414-189412	24-30-20	45-115054-3	57-10-10-051
40-98	32-40-02	414-920022-1	57-10-01-011	45-115054-4	57-10-10
40A50	21-40-01-039	4140-00	28-20-01	45-115064	57-10-30-010
40R8-16-1	71-10-01	416-13	28-10-20-020	45-115075-45	57-10-30-027
40R8-16-1	71-12-01	416-16	28-10-20-019	45-115076-8	57-10-10
40R8-16-1	71-12-01	416-326-1	28-10-20	45-115077-5	57-20-10-025
40R8-16-1	71-10-01	416-50	28-10-20	45-115077-6	57-20-10
40S5-2	71-10-01-057	416-52	28-10-20-011	45-115089-31	57-20-06
40S5-2	71-12-01-071	416-53	28-10-20-014	45-115089-31	57-20-05-021
40S5-3	71-12-01-072	416-54	28-10-20-002	45-115089-33	57-20-05
40S5-3	71-10-01-058	416-55	28-10-20-009	45-115089-33	57-20-06-040
40S5-4	71-10-01-059	416-56	28-10-20-005	45-115136-2	57-20-01-007
40S5-4	71-12-01-073	416-59	28-10-20-008	45-115136-3	57-20-01
4002G	71-12-01	416-61-6	28-10-20-001	45-115136-4	57-20-01-008

PART NUMBER	CHAP/SUB-SECT/UNIT & ITEM	PART NUMBER	CHAP/SUB-SECT/UNIT & ITEM	PART NUMBER	CHAP/SUB-SECT/UNIT & ITEM
45-115136-6	57-20-01-009	45-361117	27-50-30	45-610005-104	55-21-01-028
45-115136-8	57-20-01-010	45-361117	24-01-01	45-610005-105	55-21-01
45-115138-1	57-20-01-011	45-361117	57-20-15	45-610005-106	55-21-01-029
45-115138-2	57-20-01	45-361117-1	57-20-15-079	45-610005-107	55-21-01
45-115144-24	57-10-10	45-361117-1	27-50-30	45-610005-11	55-20-01-011
45-115178-18	57-20-05-019	45-361119-1	57-50-01-022	45-610005-114	55-21-01-044
45-115178-18	57-20-06-037	45-364238	32-10-20-070	45-610005-122	55-20-01
45-115178-19	57-20-06	45-364238	32-10-10-070	45-610005-123	55-20-01
45-115178-19	57-20-05	45-410176	53-18-01-129	45-610005-30	55-21-01
45-115178-22	57-20-05-020	45-410215-31	53-17-01-021	45-610005-38	55-20-01-003
45-115178-22	57-20-06-038	45-410455-1	53-12-01	45-610005-4	55-20-01-008
45-115178-23	57-20-06	45-410455-2	53-12-01	45-610005-5	55-20-01
45-115178-23	57-20-05	45-410455-3	53-12-01-013	45-610005-54	55-20-01-023
45-115216-22	57-20-05-004	45-410455-4	53-12-01	45-610005-54	55-21-01-007
45-115216-22	57-20-06	45-521011	27-10-01-063	45-610005-55	55-21-01
45-135027	57-50-10-018	45-521100-3	27-10-10-001	45-610005-55	55-20-01
45-135030-3	57-50-10	45-521112	27-10-01	45-610005-6	55-21-01-031
45-135030-5	57-50-10	45-521113	27-10-01	45-610005-92	55-21-01-034
45-135030-9	57-50-10	45-521212-17	27-50-01	45-610005-94	55-21-01-036
45-135031-1	57-50-10-003	45-521212-18	27-50-01	45-610011-4	55-20-01
45-135031-1	57-30-01-050	45-521212-2	27-50-01-012	45-610011-6	55-20-01
45-135031-13	57-50-10-009	45-521214	27-50-01-014	45-620010-20	55-11-01-037
45-135031-15	57-50-10-010	45-521214-1	27-50-01	45-620010-20	55-10-01-029
45-135031-21	57-50-10-013	45-521216	27-50-01-011	45-620010-30	55-10-01-008
45-135031-23	57-50-10-014	45-521216-1	27-50-01	45-620010-34	55-10-01-042
45-135031-3	57-50-10-004	45-524538	27-20-15-006	45-620010-35	55-10-01-043
45-135031-33	57-50-10-015	45-524539-3	27-20-15-004	45-620011-12	55-10-01-004
45-135031-41	57-50-10-016	45-524557-1	27-10-10-013	45-620011-4	55-10-01-007
45-135031-43	57-50-10-021	45-524557-5	27-30-11	45-620011-4	53-18-01-085
45-135031-45	57-50-10-022	45-524557-7	27-30-11	45-620020	55-10-01-035
45-135031-53	57-50-10-005	45-524560	27-10-10	45-620020	55-11-01-045
45-135031-55	57-50-10-006	45-524561-1	27-10-10-014	45-620021	55-11-01-046
45-135031-55	57-50-10-072	45-524561-7	27-30-11-016	45-620021	55-10-01-036
45-135031-57	57-50-10-073	45-524562	27-30-11	45-620024	55-11-01-059
45-135031-57	57-50-10-007	45-524562	27-10-10-009	45-620025-11	55-11-01
45-135031-59	57-50-10-008	45-524563	27-10-10-003	45-620025-11	55-10-01
45-135031-61	57-50-10-011	45-524564	27-10-10-011	45-620025-13	55-10-01-003
45-135031-63	57-50-10-012	45-524564	27-30-11	45-620025-13	55-11-01-007
45-135031-65	57-50-10-023	45-524566-11	27-30-11	45-620025-7	55-11-01
45-135031-67	57-50-10-024	45-524566-7	27-10-10-010	45-620025-7	55-10-01
45-135031-69	57-50-10-025	45-524566-9	27-30-11	45-630012-6	55-20-01-026
45-135031-71	57-50-10-026	45-524569	27-10-10-012	45-630012-8	55-20-01-027
45-135031-77	57-50-10	45-524615-9	27-10-01-077	45-660011	55-20-01
45-135031-79	57-50-10	45-524615-9	27-10-10-016	45-660011-2	55-20-01
45-135031-81	57-50-10	45-524624	27-20-01-013	45-660012-1	55-20-01-022
45-135031-83	57-50-10	45-524624	27-30-01-052	45-660013	55-20-01
45-135031-85	57-50-10-017	45-524624	27-10-01-071	45-660013-2	55-20-01
45-135031-91	57-50-10	45-524626	27-30-11	45-810071	32-30-20-044
45-135031-93	57-50-10	45-526005-1	27-30-11	45-810090	32-30-20-042
45-135031-93	57-30-01	45-526005-2	27-30-11	45-810144	32-30-20-029
45-135032	57-50-10	45-526005-3	27-30-11-003	45-815003-1	32-30-01
45-135032-1	57-50-10-031	45-526006-3	27-30-11-023	45-815003-3	32-30-01-027
45-135032-1	57-30-01-052	45-526006-5	27-30-11	45-815011-10	32-10-20
45-135032-11	57-50-10-033	45-526006-5	55-11-01-061	45-815011-4	32-10-10-034
45-135032-17	57-50-10-027	45-526006-5	55-10-01-052	45-815011-6	32-10-10
45-135032-19	57-50-10-028	45-526006-7	27-30-11-024	45-815011-8	32-10-10
45-135032-23	57-50-10-030	45-526007-1	27-30-11	45-815011-8	32-10-20-020
45-135032-25	57-50-10-029	45-526008	27-10-01-064	45-815013	32-10-10-035
45-135032-3	57-50-10-032	45-526008	55-10-01	45-815013	32-10-20-026
45-135035	57-40-01	45-526008	55-11-01	45-815013	32-10-20-021
45-135035	57-50-10-043	45-526008	27-30-11	45-815091	32-30-01-011
45-135036	57-50-10-044	45-526011-7	27-30-11-026	45-815116-2	32-30-01
45-135036	57-40-01	45-526011-7	27-30-01-035	45-815116-2	53-17-01-012
45-135039-1	57-50-10-035	45-526011-7	27-30-01	45-815215	32-10-10
45-135041	57-50-10-076	45-526015	27-30-11-006	45-815215-2	32-10-10-014
45-361115	27-50-30	45-526565-11	27-30-11	45-815215-4	32-10-10-015
45-361115	24-01-01	45-526565-13	27-30-11	45-815224	32-10-10-089
45-361116	24-01-01	45-610002	55-20-01-020	45-815225	32-10-10-088
45-361116	27-50-30	45-610005-100	55-20-01-015	45-815230	32-10-10-016
45-361116	57-20-15	45-610005-100	55-21-01-033	45-815231	32-10-10-017
45-361116-1	57-20-15-078	45-610005-102	55-21-01-033A	45-815232	32-10-10-042
45-361116-1	27-50-30	45-610005-102	55-20-01-016	45-820096-17	32-20-05-041

PART NUMBER	CHAP/SUB-SECT/UNIT & ITEM	PART NUMBER	CHAP/SUB-SECT/UNIT & ITEM	PART NUMBER	CHAP/SUB-SECT/UNIT & ITEM
45-820096-603	32-20-05	49296	33-47-01-015	50-110003-66	57-10-20-033
45-824014	32-30-10-054	49296	36-10-01	50-110003-68	57-10-20-047
45-825031	32-20-05-022	49296	53-16-50	50-110003-69	57-10-20
45-825031	32-20-10-058	49296	53-16-51	50-110003-70	57-10-20-034
45-825032	32-20-10-062	49384	55-10-01	50-110003-72	57-10-20-048
45-825032	32-20-05-020	49384	55-11-01	50-110003-73	57-10-20
45-825033	32-20-10-032	49384	55-21-01	50-110003-74	57-10-20-035
45-825033	32-20-05-033	5	39-10-01-016	50-110003-76	57-10-20-049
45-910314	71-60-01-008	5	39-10-10-011	50-110003-77	57-10-20
45-910314	71-62-01-065	5	39-10-30-047	50-110003-78	57-10-20-036
45-910315-1	71-62-01-066	5	39-10-30	50-110003-80	57-10-20-050
45-910315-1	71-60-01-007	5	39-10-30-054	50-110003-81	57-10-20
45-921544	28-10-01-009	5	39-10-30-055	50-110003-82	57-10-20-037
45-921544	28-10-20	5 00 X 5	32-20-05	50-110003-84	57-10-20-038
45-921544-1	28-10-20-052	5 00 X 5 6P TT	32-20-05-008	50-110003-86	57-10-20-020
45-939120	71-00-01-022	5.00X5	32-20-10	50-110003-87	57-10-20
45-939120	71-00-02-042	5.00X5	32-20-20	50-110003-90	57-10-20-021
45-939120	71-00-03-042	5.00X5 6P TL	32-20-10-004	50-110010-100	57-20-05-002
45C40	21-40-01-012	5.00X5 6P TT	32-20-10	50-110010-100	57-20-06
450273	32-30-20-023	5.00X5 6P TT	32-20-20-004	50-110010-106	57-20-05-073
4522	24-00-01-010	5-8SC	36-10-01-044	50-110010-108	57-20-05-072
4524	39-10-30	5AJ41-474L	21-40-01	50-110010-109	57-20-05
4532	24-00-01-013	5D1048	30-10-01	50-110010-110	57-20-06-031
4532	24-00-01-017	50 OHM 25 WATT	39-10-30	50-110010-111	57-20-06
4532	24-01-01-012	50-110002-122	57-10-10-104	50-110010-112	57-20-06
453418	24-30-10-028	50-110002-122	57-10-10	50-110010-112	57-20-06-046
453433	24-30-10	50-110002-123	57-10-10	50-110010-112	57-20-05-003
453460	24-30-10-026	50-110002-123	57-10-10	50-110010-125	57-20-05-007
453844	24-30-10-019	50-110002-132	57-10-10-103	50-110010-125	57-20-06
454408	24-30-10-027	50-110002-133	57-10-10	50-110010-126	57-20-06
455-28	52-10-01-069	50-110002-134	57-10-10	50-110010-126	57-20-05
4553	57-20-01-017	50-110002-135	57-10-10	50-110010-131	57-20-05-038
4570	32-20-10	50-110002-136	57-10-10-099	50-110010-131	57-20-06-054
4570	53-50-01-008	50-110002-137	57-10-10	50-110010-161	57-20-10-046
4587	27-30-30	50-110002-138	57-10-10-100	50-110010-161	57-20-06-005
4596	57-20-21-033	50-110002-139	57-10-10	50-110010-162	57-20-06
4596	57-20-22-022	50-110002-140	57-10-10	50-110010-162	57-20-10
4596	57-20-23-040	50-110002-150	57-10-10-101	50-110010-163	57-20-10-045
461	21-40-60-027	50-110002-151	57-10-10	50-110010-163	57-20-06-019
4626	32-20-10-070	50-110002-178	57-10-10	50-110010-165	57-20-05-008
4626	33-40-01-001	50-110003-10	57-10-20	50-110010-165	57-20-06
4626	33-40-03-001	50-110003-11	57-10-20	50-110010-179	57-20-06
4626	33-40-05-001	50-110003-12	57-10-20	50-110010-179	57-20-05-005
4626	33-40-07-001	50-110003-13	57-10-20	50-110010-18	57-20-05-028
4626	53-50-10-011	50-110003-14	57-10-20-016	50-110010-19	57-20-05
47	52-35-01	50-110003-16	57-10-20-017	50-110010-20	57-20-05-029
4701	33-44-01-015	50-110003-18	57-10-20-018	50-110010-21	57-20-05
475126	21-40-40-004	50-110003-2	57-10-20-001	50-110010-28	57-20-10-027
475594	21-40-40-009	50-110003-20	57-10-20-019	50-110010-29	57-20-10
475634	21-40-40-007	50-110003-22	57-10-20	50-110010-30	57-20-10-028
476284	21-40-20-009	50-110003-22	57-10-20-002	50-110010-31	57-20-10
476284	21-40-40-001	50-110003-24	57-10-20-012	50-110010-34	57-20-06-047
476284	30-40-01-010	50-110003-26	57-10-20-014	50-110010-34	57-20-05-030
476284	30-60-01-024	50-110003-27	57-10-20	50-110010-36	57-20-05-031
476285	21-40-40-003	50-110003-28	57-10-20-013	50-110010-36	57-20-06-048
476364	21-40-40-005	50-110003-3	57-10-20	50-110010-48	57-20-12
476474	21-40-40-002	50-110003-30	57-10-20-015	50-110010-48	57-20-01-004
476563	21-40-40-008	50-110003-31	57-10-20	50-110010-49	57-20-01
48152	39-10-30	50-110003-32	57-10-20-009	50-110010-50	57-20-05-032
48152	39-14-20-023	50-110003-36	57-10-20-010	50-110010-50	57-20-06-049
4840719	25-22-05-021	50-110003-4	57-10-20-005	50-110010-51	57-20-06
4840719	25-23-01	50-110003-42	57-10-20-025	50-110010-51	57-20-05
49-378-627	25-16-20	50-110003-44	57-10-20-026	50-110010-52	57-20-05-033
49158	33-47-01-014	50-110003-46	57-10-20-027	50-110010-52	57-20-06-050
49158	53-50-01	50-110003-48	57-10-20-028	50-110010-53	57-20-06
49160	57-10-10	50-110003-5	57-10-20	50-110010-53	57-20-05
49161	28-10-10	50-110003-50	57-10-20-029	50-110010-54	57-20-05-034
49169	24-01-01	50-110003-52	57-10-20-030	50-110010-54	57-20-06-051
49245	24-01-01	50-110003-54	57-10-20-031	50-110010-55	57-20-06
49296	25-60-01-004	50-110003-62	57-10-20-032	50-110010-55	57-20-05
49296	24-01-01-010	50-110003-64	57-10-20-046	50-110010-602	57-20-01
49296	21-22-40	50-110003-65	57-10-20	50-110010-602	57-20-10

PART NUMBER	CHAP/SUB-SECT/UNIT & ITEM	PART NUMBER	CHAP/SUB-SECT/UNIT & ITEM	PART NUMBER	CHAP/SUB-SECT/UNIT & ITEM
50-110010-603	57-20-10	50-160012-1	57-50-01-013	50-344478	11-30-01-086
50-110010-603	57-20-01	50-160012-2	57-50-01	50-361131	27-50-01-018
50-110010-80	57-20-10-065	50-160013-1	57-50-01-014	50-364108	76-15-01-047
50-110010-81	57-20-10	50-160013-2	57-50-01	50-364108	32-60-01-004
50-110010-82	57-20-10-064	50-300008-29	30-60-10-019	50-364129	76-15-01-048
50-110010-88	57-20-06-053	50-300008-3	30-60-10-010	50-364172-5	53-50-01
50-110010-88	57-20-05-037	50-300013-37	32-40-20-010	50-364172-9	53-50-01
50-110010-98	57-20-05-001	50-300013-37	32-40-21-013	50-364212	53-50-01-009
50-110010-98	57-20-06	50-320024	76-16-01-015	50-364253-7	53-50-10-010
50-110010-99	57-20-06	50-320024	76-15-01-015	50-364253-9	53-50-10-008
50-110010-99	57-20-05	50-320029	27-10-30	50-364261-5	33-45-01-002
50-110025-44	57-10-10-034	50-320029-2	27-10-30-017	50-364276-1	11-30-10-029
50-110025-44	57-10-01-018	50-320029-4	27-10-30	50-364308-127	24-00-01-035
50-110046-10	57-20-05-064	50-320030-2	53-25-01-048	50-364308-223	24-00-01
50-110046-11	57-20-05	50-320031-2	53-25-01-047	50-364308-67	24-00-01
50-110046-8	57-20-05-009	50-320032	53-25-01	50-369050	30-60-01
50-110046-8	57-20-06	50-320032	53-25-01-017	50-380010-19	39-10-20
50-110046-9	57-20-06	50-320032	27-10-30-022	50-380010-21	39-14-01
50-110046-9	57-20-05	50-320032	27-20-15-021	50-380010-21	39-10-01
50-110056	57-20-05-065	50-320032	27-30-20-003	50-380010-21	39-10-01
50-110056	57-20-06-084	50-320033	27-20-15-019	50-380010-21	39-14-40
50-110056-1	57-20-06	50-320033	53-25-01-025	50-380010-9	39-10-10
50-110056-1	57-20-05	50-320034	53-25-01-042	50-380011-17	39-10-10-015
50-110057	57-10-20-007	50-320034	27-20-15-017	50-380011-17	39-10-01-003
50-110057-1	57-10-20	50-320034-2	53-25-01	50-380011-17	39-14-01-007
50-110059-2	57-10-10-013	50-320037-2	53-25-01	50-380011-17	39-10-20-008
50-110062	57-20-05-066	50-320038	53-25-01-009	50-380013-5	39-10-30-056
50-110062	57-20-06-085	50-320046	53-25-01	50-380013-5	39-14-10-002
50-110062-1	57-20-06	50-320046	27-20-15-018	50-380013-5	39-14-30-014
50-110062-1	57-20-05	50-320091	76-15-01-014	50-380013-5	39-14-20-014
50-110064-4	57-20-06	50-320091	76-16-01-014	50-380015-3	39-14-30
50-110064-4	57-20-10-050	50-320092	76-16-01	50-380016-11	30-10-10
50-110064-5	57-20-10	50-320092	76-15-01	50-380016-13	30-10-10-019
50-110064-5	57-20-06	50-320092-2	76-15-01-011	50-380016-13	30-10-30-094
50-110064-6	57-20-06	50-320092-2	76-16-01-011	50-380016-13	30-10-20-072
50-110064-6	57-20-10-051	50-320092-4	76-16-01-010	50-380024	39-14-10
50-110064-7	57-20-10	50-320092-4	76-15-01-010	50-380024	39-14-01-014
50-110064-7	57-20-06	50-320093-10	76-15-01-007	50-380027	30-10-01
50-110064-8	57-20-10-052	50-320093-10	76-16-01-007	50-380048-1	30-10-10-052
50-110064-9	57-20-10	50-320093-6	76-16-01-006	50-380048-1	30-10-20-015
50-110074-3	57-10-10	50-320093-6	76-15-01-006	50-380048-1	30-10-30-090
50-110074-4	57-10-10	50-320137	27-10-30-018	50-380048-3	24-00-01
50-110074-5	57-10-01-019	50-320137	27-10-30-019	50-380079-1	32-40-30-048
50-110074-5	57-10-10-026	50-320137	53-25-01	50-380079-1	32-40-31-032
50-110074-6	57-10-10	50-320148-2	76-15-01-041	50-380079-1	32-40-50
50-110074-6	57-10-01	50-320148-2	76-16-01-041	50-380079-3	32-40-50
50-110074-602	57-10-10	50-320242	27-20-15	50-380079-3	32-40-31
50-110074-603	57-10-10	50-320242	53-25-01-045	50-380079-3	32-40-30
50-110078	57-20-06-094	50-320242-1	53-25-01	50-380086-1	30-60-10-032
50-110078-1	57-20-06	50-320242-1	27-20-15-020	50-380086-1	39-10-10
50-110080	57-20-06	50-320243-13	53-25-01-052	50-380086-11	30-60-10
50-110080	57-20-05	50-320243-15	53-25-01-053	50-380086-11	30-62-01
50-110080-1	57-20-05	50-320243-16	53-25-01	50-380086-11	30-64-01
50-110080-1	57-20-06	50-320279	11-30-01-091	50-380086-3	39-10-10
50-110080-2	57-20-06-042	50-324103-1	39-14-50-029	50-380086-7	30-64-01
50-110080-2	57-20-05-025	50-324103-1	39-14-40	50-380086-7	30-62-01
50-110081	57-20-05-026	50-324103-1	39-14-10-009	50-380090	30-10-20-031
50-110081	57-20-06-026	50-324103-1	39-14-30-015	50-380090	30-10-10-027
50-110081	57-10-10	50-324103-1	39-14-20-021	50-380090	71-00-01
50-110081	57-10-10	50-324103-1	39-10-01-009	50-380090	71-00-02
50-110081	57-10-10	50-324103-1	39-10-01	50-380090	71-00-03
50-110081	57-20-05-024	50-324103-1	39-14-01-003	50-380090	71-02-01
50-110081	57-20-06-043	50-324103-1	39-10-10-022	50-380090-1	71-00-03
50-110081	57-20-10-059	50-324103-1	39-10-20-021	50-380090-1	71-00-02
50-110081	57-20-10	50-324104	39-10-20-022	50-380090-1	71-00-01
50-110086-1	57-20-06-086	50-324104	39-10-10-023	50-380090-1	30-10-10
50-110086-1	57-20-05-067	50-324104	39-10-01-008	50-380090-2	71-00-01
50-110086-2	57-20-05	50-324377-3	36-10-01-051	50-380090-2	71-00-03
50-110086-2	57-20-06	50-324377-3	36-10-10-038	50-380090-2	71-00-02
50-110093-2	57-10-10	50-324473-1	36-10-10-027	50-380094-11	39-10-10
50-110093-6	57-10-10	50-324473-31	36-10-01-039	50-380094-11	39-10-20
50-160003-6	57-50-01-016	50-324473-31	30-10-30-032	50-380094-13	39-10-20

PART NUMBER	CHAP/SUB-SECT/UNIT & ITEM	PART NUMBER	CHAP/SUB-SECT/UNIT & ITEM	PART NUMBER	CHAP/SUB-SECT/UNIT & ITEM
50-380094-13	39-10-10	50-400205-1	53-50-01-003	50-534527-5	25-23-01-110
50-380094-15	39-10-20	50-400335-1	11-30-01-002	50-534527-5	25-23-01-123
50-380094-15	39-10-10	50-400352-1	52-10-01	50-534527-5	25-23-01
50-380094-9	34-10-20	50-400366-1	52-10-01	50-534536	25-23-01-124
50-380094-9	39-14-20-017	50-400415	53-50-01-006	50-534547-29	25-23-01
50-380125	27-30-30-012	50-410024-13	53-50-20	50-534547-29	25-23-01-116
50-380170-11	28-20-01	50-524038	27-20-15-011	50-534547-30	25-23-01
50-380170-11	28-10-10	50-524039-4	27-10-30-006	50-534547-30	25-23-01-102
50-380170-13	28-20-01	50-524040-8	27-10-30-015	50-534733	11-30-10-023
50-384001-31	30-60-01	50-524041	27-10-30-013	50-534733-1	25-20-20
50-384001-31	39-10-10-024	50-524042-2	27-20-15-016	50-534733-1	25-13-30
50-384001-31	39-14-01-035	50-524042-8	27-20-15-014	50-534733-1	25-13-40
50-384001-33	27-50-20-015	50-524043-10	27-20-15-010	50-534846-1	27-10-20
50-384001-35	27-50-20-031	50-524045-2	27-30-20-023	50-534846-10	27-10-20
50-384024-15	39-14-01-011	50-524045-8	27-30-20-020	50-534846-10	27-10-20
50-384024-15	34-10-20	50-524047	27-20-15-009	50-534846-11	27-10-20-037
50-384024-15	39-14-10	50-524059-4	27-10-20-075	50-534846-11	11-30-10-022
50-384024-19	39-14-10	50-524124	27-10-30	50-534846-19	27-10-20
50-384024-19	39-14-20-015	50-524124-2	27-10-30	50-534846-21	27-10-20-041
50-384024-19	39-14-30-016	50-524124-4	27-10-30-004	50-534846-9	27-10-20
50-384024-19	34-10-20	50-524125	27-10-30	50-534846-9	27-10-20-039
50-384024-19	39-14-10	50-524128-1	27-10-30-003	50-554100	53-25-01-073
50-384024-19	39-10-10	50-524128-1	11-30-10-046	50-554106	53-30-01-033
50-384024-41	39-14-10	50-524138	27-20-15-001	50-554106	53-15-01-031
50-384024-41	34-10-20	50-524196-2	27-30-20-012	50-554106	21-40-01-044
50-384024-41	39-14-10	50-524198	53-25-01-024	50-554242-3	21-22-50-018
50-384024-49	39-14-10	50-524199	27-30-20-009	50-554242-3	53-52-02
50-384024-49	34-10-20	50-524200-4	27-30-20-007	50-554242-3	53-52-03
50-384024-49	39-14-10-003	50-524223-3	27-30-20-026	50-554242-3	53-50-10
50-384024-59	39-10-20	50-524223-3	11-30-10-053	50-555018	21-40-01-015
50-384040	36-10-10-002	50-524223-3	11-30-01-027	50-555018	21-40-20-021
50-384040	34-10-01-001	50-524223-3	11-30-01-042	50-555019	21-40-20
50-384040	34-10-01-026	50-524223-3	53-25-01-003	50-555019	21-40-01
50-384040	34-10-10-019	50-524258	11-30-10-047	50-555019-2	21-40-01-017
50-384040	34-10-10-048	50-524258-3	27-70-01	50-555019-2	21-40-20-023
50-384040	30-30-01-001	50-524315	27-10-20-020	50-555019-4	21-40-20-024
50-384044	53-50-20-003	50-524326-3	27-20-20-051	50-555019-4	21-40-01-018
50-384046	35-00-21-014	50-524326-3	27-20-20-028	50-560012	11-30-01-067
50-384046	35-00-22-017	50-524326-4	27-20-20-019	50-560012	35-00-22-061
50-384052	39-10-01	50-524326-4	27-20-20-052	50-560012	35-00-23-022
50-384052-5	39-10-01	50-524328-1	27-20-20	50-560012	35-00-24-026
50-384073	34-10-20-003	50-524328-1	27-20-20	50-560012	35-00-24
50-384073	39-14-10-006	50-524328-2	27-20-20	50-560012	35-00-24
50-384073	39-14-20-018	50-524328-2	27-20-20	50-560012	35-00-24
50-384073	39-14-30-023	50-524471-1	27-20-15	50-560012	35-00-21-039
50-384202	39-14-30-018	50-524495-29	27-30-30	50-560012	35-00-20-021
50-384202	39-14-10-004	50-524497-1	27-30-30-009	50-560015	35-00-05-013
50-384203	39-14-10	50-524587	27-30-30-008	50-560015	11-30-01-068
50-384203	39-14-30	50-524594	27-10-20-027	50-580027-37	32-40-31-016
50-384204	39-14-30-019	50-530134-1	52-10-02	50-580027-39	32-40-31
50-384204	39-14-10-007	50-534033-179	25-22-05-073	50-590013	25-10-01
50-384205	39-14-10	50-534033-179	25-22-07	50-590014	25-10-01-017
50-384205	39-14-30	50-534073-1	25-22-05-136	50-590106	25-10-01-007
50-389010-19	76-10-01-004	50-534073-1	25-23-01-071	50-820130-10	32-50-01
50-389010-21	76-10-01-005	50-534073-1	25-23-01-086	50-820130-4	32-50-01
50-389010-23	76-12-01-004	50-534288	11-30-01-066	50-820130-6	32-50-01
50-389010-27	76-10-01-002	50-534288	35-00-20-041	50-820130-8	32-50-01
50-389010-29	76-10-01-001	50-534288	35-00-22-051	50-920030-4	28-20-50-004
50-389012-15	76-10-01-003	50-534318-9	25-20-10-055	50-920064	28-10-01-003
50-389012-19	76-12-01-006	50-534363	35-00-21-045	50-920065-1	28-10-01-007A
50-389012-19	76-12-01-007	50-534363	35-00-21	50-920077	57-20-10-053
50-389012-19	76-12-01-008	50-534363	35-00-21-037	50-920077	57-10-10-118
50-389012-21	76-12-01-013	50-534363 C	35-00-22-060	50-920077-5	57-20-06-021
50-389012-21	71-66-01-047	50-534430	25-13-01-018	50-921509-37	28-10-01-018
50-389012-25	76-12-01-009	50-534475-101	25-22-05-086	50-921509-7	28-10-01
50-389012-27	76-12-01-014	50-534475-101	25-22-01-085	50-921509-9	28-10-01-016
50-389012-27	71-66-01	50-534475-101	25-22-01-121	50-921518	28-10-20
50-389083	30-10-20-063	50-534475-101	25-22-05-087	50-921518	28-10-01
50-400165	53-50-01-007	50-534475-101	25-22-05-124	50-921518-1	28-10-20
50-400166-2	53-50-01-004	50-534481-7	39-10-10-010	50-921520	28-10-01-020
50-400166-4	53-50-01-005	50-534481-7	39-10-01	50-921526-1	11-20-01-013
50-400166-6	53-50-01	50-534481-7	39-10-20-026	50-921526-1	11-20-10-018

PART NUMBER	CHAP/SUB-SECT/UNIT & ITEM
50-921526-3	11-20-10
50-921526-3	11-20-01
50-939118-10	71-12-01-051
50-939118-10	71-10-01-033
50-939118-12	71-12-01
50-939118-12	71-10-01
50-939118-14	71-10-01
50-939118-2	71-10-01-030
50-939118-2	71-12-01-047
50-939118-4	71-12-01-048
50-939118-4	71-10-01-031
50-939118-6	71-10-01-032
50-939118-6	71-12-01-050
50-944036-11	76-15-01
50-944036-11	76-15-01-025
50-944036-11	76-16-01-021
50-944036-11	76-16-01-025
50-944036-13	76-16-01-029
50-944036-13	76-16-01-019
50-944036-13	76-15-01-029
50-944036-13	76-15-01
50-944036-23	76-15-01-021
50-944036-23	76-16-01
50-944036-25	76-16-01
50-944036-25	76-15-01-019
50-944036-3	76-15-01-017
50-944036-3	76-16-01-017
50-944036-7	76-16-01-023
50-944036-7	76-15-01-023
50-944039-3	76-15-01
50-944039-3	76-15-01
50-944039-3	76-15-01
50-944040-3	76-15-01
50-944040-3	76-15-01
50-944040-3	76-15-01
50-944041-3	76-15-01
50-944041-3	76-15-01
50-944041-3	76-15-01
50-944042-3	76-15-01
50-944042-3	76-15-01
50-944042-3	76-15-01
50-944043-3	76-15-01
50-944043-3	76-15-01
50-944043-3	76-15-01
50-944044-3	76-15-01
50-944044-3	76-15-01
50-944044-3	76-15-01
50-970101-91	30-10-30-081
5000-68	32-40-40-004
5000-77	32-40-40
5000-77	32-40-41-004
500535-401	25-23-01
500904-4651	21-40-60-036
5017850	24-30-10-025
5042	71-00-03
5042-1	71-00-03-031
504270	32-20-20-033
504271	32-10-20-039
5043-14	35-00-22-041
505548-80	21-40-60-037
507208	53-50-10-016
507208	53-50-20-005
50727	57-10-10-107
51A05	21-40-01-011
51A45	21-40-01-008
5100-37	32-40-61-010
51020	27-10-20-004
51020	27-10-20
51067	21-22-30-008
52-032-156-1120	25-13-01-014
520-5408	39-14-20
5201KD	32-30-20-027
5201SBKF	32-30-20
5261-031	61-22-02-062
5261-031	61-20-03-058
5261-036	61-22-01-060
5261-036	61-20-02-060
531511	57-20-22
534750	71-02-01
534750	71-02-02
534862	71-00-03
534862	71-00-01
534862	71-00-02
5358-016	61-20-03
5358-016	61-22-02
536-2	21-40-60-026
536213	24-30-10-039
539291	71-00-01-012
539291	71-00-02-012
539291	71-00-03-012
539547	24-30-10-041
539547-31-19	71-00-01
539547-31-19	71-00-02-011
539547-31-19	71-00-03
539547-32	71-00-03-011
539547-32	71-00-02
539547-32	71-00-01-011
54A35	21-40-01-010
55-0069-1	33-47-01-010
55-0069-1	33-49-01-014
55-0221-1	33-44-10-023
55-207-13	33-45-01
55-32-1	21-22-01-052
55-4753-4190	76-12-01-005
55-590000	25-10-01
55-590000-13	25-10-01
55-590000-23	25-10-01
55-590000-57	25-10-01
55-590000-65B	25-10-01
55-590004	25-10-01
55-590004-1	25-10-01-010
55-590006	25-10-01
55-8007-1S	32-30-01
55-8007-3S	32-30-01
5555-25	33-45-01-018
5555-25	33-46-01-020
5598577	25-22-01
56A14	21-40-01
5640556	28-10-01-010
5641801	28-10-01
5643295	39-10-01
5643295	39-10-10
5677	32-30-20
5705	32-30-30-012
573E-24VB	31-30-01-001
573F24V-B	39-10-10
576	56-10-10
58-100023-5	57-40-01
58-100023-5W-C	11-20-10
58-100023-7	57-40-01
58-100023-7B-C	11-20-10
58-100026-5	57-40-01
58-100026-7	57-40-01
58-110011-1	57-10-01
58-110011-1	57-10-10
58-110011-2	57-10-10
58-110011-2	57-10-01
58-170000-11	57-20-21
58-170000-11	57-20-22-014
58-170000-13	57-20-22
58-170000-14	57-20-22
58-170000-5	57-30-01
58-170000-5	57-20-22-026
58-170000-6	57-20-22
58-170000-6	57-30-01
58-170000-605	57-20-22
58-170000-605	57-20-21
58-170000-606	57-20-22
58-170000-607	57-20-22
58-170000-607	57-10-01
58-170000-608	57-10-01
58-170000-608	57-20-22
58-170000-609	57-20-21
58-170000-610	57-20-21
58-170000-7	57-20-22-025
58-170000-7	57-30-01
58-170000-8	57-30-01
58-170000-8	57-20-22
58-170011-1	57-20-22
58-170011-2	57-20-22
58-320000-3	30-10-30-021
58-320000-3	36-10-01-026
58-324000-1	39-14-60
58-324000-1	39-14-30
58-324000-1	39-10-20
58-324000-11	34-10-20
58-324001-1	34-10-20
58-324001-1	39-10-20
58-324001-1	39-14-30
58-324001-1	39-14-60
58-324001-9	39-14-30
58-324021-1	36-10-01
58-324021-1	34-10-10
58-324021-1	30-10-30
58-324021-19	34-10-10
58-324021-29	34-10-10
58-324021-33	34-10-10
58-324021-41	34-10-01-030
58-324021-43	34-10-01-034
58-324021-43	34-10-10
58-324021-45	34-10-10
58-324021-45	34-10-01-031
58-324021-47	36-10-01-052
58-324021-49	36-10-01-053
58-324021-55	36-10-01-038
58-324021-55	36-10-01-045
58-324021-55	30-10-30-031
58-324021-61	36-10-01-046
58-324021-67	34-10-10
58-324021-69	36-10-01-047
58-324025-1	76-16-01
58-324025-17	53-25-01
58-324025-25	53-25-01
58-324025-27	53-25-01
58-324025-3	76-16-01
58-324025-37	27-30-20-011
58-324025-605	27-30-20
58-324025-605	27-10-30
58-324025-605	27-20-15
58-324025-605	53-25-01
58-324027	31-30-01
58-324031-7	27-50-20-057
58-324031-7	53-25-01
58-324036-3	27-10-20
58-324037-1	39-10-20
58-324037-3	39-10-20-003
58-324037-5	39-10-20
58-324038-3	39-14-60
58-324039-1	39-14-60
58-324039-7	39-14-30
58-324039-7	39-10-20
58-324039-9	34-10-20
58-324040	39-10-20-001
58-324041	39-10-01
58-324041	39-10-20
58-324042	39-10-20-012

PART NUMBER	CHAP/SUB-SECT/UNIT & ITEM	PART NUMBER	CHAP/SUB-SECT/UNIT & ITEM	PART NUMBER	CHAP/SUB-SECT/UNIT & ITEM
58-324043	36-10-10	58-380018-1	39-14-30	58-440000-27	53-18-01
58-324043	34-10-10-016	58-380020-3	39-14-30	58-440000-28	53-18-01
58-324046-1	34-10-10	58-380020-3	39-14-10	58-440022-17	53-18-01
58-324046-1	34-10-01	58-380022-11	39-10-20	58-440022-19	53-18-01
58-324047-1	34-10-01	58-380022-11	39-10-01	58-440022-23	53-18-01-030
58-324047-1	34-10-10	58-380022-11	39-14-10	58-440022-27	53-18-01-031
58-360000-603	55-40-01-007	58-380022-11	39-14-30	58-440025	53-18-01
58-360000-607	25-16-30	58-380022-11	39-14-40	58-440026-1	53-20-01
58-360000-609	25-16-30	58-380022-11	39-14-60	58-440026-3	53-20-01-020
58-360000-609	24-00-01	58-380022-11	30-60-10	58-440027	53-18-01-100
58-360021	33-47-01	58-380022-11	30-62-01	58-440028-5	53-18-01
58-360022-1	33-40-05	58-380022-11	30-64-01	58-440030-1	53-18-01
58-360024-1	33-40-05-002	58-380022-11	30-10-20	58-440030-3	53-18-01-055
58-360025	57-20-22	58-380022-11	30-10-30	58-500017-1	11-30-10-057
58-360025-1	33-44-10	58-380028-1	39-10-01	58-500047-35	27-30-30
58-360025-13	33-44-01-008	58-380028-11	39-10-01	58-524021	53-13-01-034
58-360025-13	33-44-10	58-380028-7	39-10-01	58-524021-1	53-13-01
58-360025-15	33-44-01-007	58-380032	36-10-10-008	58-524026	53-18-01-097
58-360025-15	33-44-10	58-380032	34-10-10-014	58-524027	11-30-10-038
58-360025-5	33-44-10	58-380032	34-10-01	58-524027	27-30-30
58-360025-601	53-20-01	58-380041-1	34-10-20	58-524034-1	27-10-20-016
58-360025-615	24-00-01	58-380041-3	34-10-20-002	58-524035-1	27-10-20-012
58-360025-9	33-44-10-004	58-380041-3	39-14-10	58-524035-1	27-10-20
58-360026-1	33-40-07	58-380042-1	39-10-01	58-524036-1	27-10-20-007
58-360027	33-40-07-002	58-380042-1	39-14-40	58-524036-3	27-10-20-008
58-360028	57-20-22	58-380043-1	39-14-40	58-524037-1	27-10-20
58-360028-13	33-44-10	58-380043-1	39-10-01	58-524037-601	27-10-20
58-360028-23	33-44-10	58-380044-1	39-14-10	58-524037-601	27-10-01-032
58-360028-3	33-44-10	58-380044-3	39-14-10	58-524038-1	27-10-20
58-360028-3	24-01-01	58-380044-3	39-10-20	58-524038-601	27-10-20
58-360028-5	33-44-10	58-380045-1	39-14-10	58-524038-601	27-10-01
58-360028-603	24-00-01	58-380045-1	34-10-20	58-524039-1	27-10-20
58-360028-7	33-44-10-005	58-380045-3	39-14-10	58-524039-1	27-10-20
58-360028-9	33-44-10-006	58-380045-3	39-10-20	58-524039-3	27-10-20-010
58-361011-1	24-01-01-003	58-380046-1	39-14-10	58-524039-5	27-10-20
58-361012	24-01-01-017	58-380046-3	39-14-10	58-524039-5	27-10-20
58-361013-5	30-10-30	58-380046-3	39-10-20	58-524039-7	27-10-20-011
58-361013-5	30-10-20-003	58-380048-1	39-10-20-010	58-524040-1	27-10-20
58-364000-5	24-00-01-023	58-380048-1	39-10-01-006	58-530026-1	25-20-20
58-364000-601	53-51-01	58-380048-3	39-10-20	58-530026-1	25-13-30
58-364000-7	24-00-01	58-380050-3	39-10-20-011	58-530026-1	25-13-40
58-364000-9	24-00-01-024	58-380050-3	39-10-01	58-530026-3	25-21-30
58-364026	11-30-10-042	58-380050-9	39-10-01	58-530026-31	25-21-30
58-364026	39-10-20-029	58-380051-3	39-10-20	58-530026-33	25-21-30
58-364026	39-14-60-021	58-380056-1	24-30-20-001	58-530026-5	25-20-20-001
58-364029	11-30-10-043	58-380069-1	39-10-10	58-530026-5	25-13-40-001
58-364029	24-00-01	58-380069-1	39-14-10-005	58-530026-5	25-13-30-001
58-364029	24-01-01-013	58-380069-1	39-10-20	58-530026-7	25-21-30-031
58-364030-3	11-30-10-040	58-380069-1	39-14-10	58-530029-1	25-21-30
58-364030-5	11-30-10-041	58-380069-1	39-14-30-022	58-530029-15	25-21-30
58-364034-13	35-00-24	58-380069-3	39-14-30	58-530029-17	25-21-30
58-364034-5	35-00-24	58-380069-3	39-10-20	58-530029-5	25-21-30-008
58-364041	24-00-01-011	58-380086-1	30-40-01-006	58-530029-601	25-21-30
58-380006	30-60-01-013	58-420021-3	53-16-51	58-530029-603	25-21-30
58-380009	27-50-30-001	58-420027-15	53-14-50-019	58-530030-11	25-22-07-026
58-380009-1	27-50-30	58-420034-1	53-17-50	58-530030-11	25-50-01-008
58-380010-1	34-10-20-001	58-420034-1	53-17-50	58-530034-1	39-14-80
58-380010-1	39-14-30	58-420034-2	53-17-50	58-530040-5	25-13-30
58-380010-3	39-10-20	58-420034-2	53-17-50	58-530040-5	25-20-20
58-380010-5	39-14-10	58-420039	53-16-51	58-530040-5	25-20-20
58-380010-5	34-10-20	58-420039	53-30-01-020	58-530041-19	25-21-30
58-380013-1	39-14-10	58-420039	53-32-01-013	58-530041-21	25-21-30
58-380013-1	39-14-30	58-420044-3	53-20-01-014	58-530041-23	25-20-20
58-380013-3	39-14-30	58-420050-1	53-16-51	58-530041-23	25-13-40
58-380013-3	39-14-10	58-420051-3	53-16-51	58-530041-25	25-13-40
58-380014-1	39-14-10	58-420052-1	53-16-51	58-530041-25	25-13-30
58-380014-1	39-14-30	58-420053-1	53-16-51	58-530041-25	25-20-20
58-380014-3	39-14-30	58-420057-3	52-20-01	58-530041-27	25-20-20
58-380014-3	39-14-10	58-420062-1	56-10-10-036	58-530041-27	25-13-30
58-380015-3	39-14-10	58-420063-1	56-10-10-035	58-530041-28	25-13-30
58-380015-3	27-10-20-043	58-420064-1	56-10-10-037	58-530041-28	25-20-20
58-380018-1	39-14-10	58-420065-3	56-10-10-039	58-530042-3	25-22-07-020

PART NUMBER	CHAP/SUB-SECT/UNIT & ITEM	PART NUMBER	CHAP/SUB-SECT/UNIT & ITEM	PART NUMBER	CHAP/SUB-SECT/UNIT & ITEM
58-530045-1	25-20-20-029	58-530108-43	25-13-40-054	58-550018-9	53-50-10-006
58-530045-1	25-13-40	58-530108-43	25-20-20-031	58-560000-1	35-00-24
58-530045-1	25-13-30	58-530108-45	25-20-20-030	58-560000-101	35-00-23-017
58-530045-2	25-13-30	58-530108-45	25-13-40-046	58-560000-123	35-00-23-013
58-530045-2	25-13-40	58-530108-47	25-13-40	58-560000-125	35-00-23-016
58-530045-2	25-20-20	58-530108-47	25-20-20	58-560000-125	35-00-24-017
58-530045-2	25-21-30-020	58-530108-48	25-20-20	58-560000-125	35-00-24-020
58-530045-3	25-21-30	58-530108-48	25-13-40	58-560000-19	35-00-24-029
58-530045-3	25-13-40-032	58-530108-49	25-13-40	58-560000-21	35-00-24-005
58-530046	25-13-40-033	58-530108-49	25-20-20	58-560000-3	35-00-24
58-530046	25-21-30	58-530108-51	25-20-20	58-560000-33	35-00-24-033
58-530046-1	25-13-30-037	58-530108-51	25-13-40-045	58-560000-39	35-00-24-002
58-530072-5	25-21-30-008A	58-530108-7	25-13-40	58-560000-45	35-00-24-007
58-530075-1	25-23-01	58-530108-9	25-13-40	58-560000-49	35-00-24-042
58-530075-3	25-23-01-109	58-530109-1	21-22-40-011	58-560000-5	35-00-24
58-530075-5	25-23-01	58-530110-1	21-22-40	58-560000-51	35-00-24-031
58-530076-3	25-23-01	58-530110-3	21-22-40-009	58-560000-53	35-00-24-012
58-530080-1	25-20-20	58-530118-1	25-13-40	58-560000-57	35-00-24-041
58-530080-1	25-13-40-048	58-530118-1	25-20-20	58-560000-59	35-00-24-040
58-530080-3	25-21-30	58-530118-1	25-20-20	58-560000-61	35-00-24-036
58-530081-17	25-23-01	58-530118-7	25-20-20	58-560000-63	35-00-24-044
58-530081-19	25-23-01-014	58-530118-7	25-20-20	58-560000-65	35-00-24-027
58-530081-27	25-23-01	58-530118-7	25-13-40	58-560000-69	35-00-24-015
58-530081-29	25-23-01-015	58-530120-1	25-23-01	58-560000-71	35-00-24-014
58-530081-49	25-23-01	58-530120-1	25-23-01	58-560000-71	11-30-10-019
58-530081-53	25-23-01	58-530120-11	25-23-01-026	58-560000-77	35-00-24
58-530082-1	25-13-40-050	58-530120-11	25-23-01-034	58-560000-79	35-00-23-007
58-530082-3	25-20-20-032	58-530120-13	25-23-01-035	58-560000-81	35-00-23-010
58-530082-5	25-21-30	58-530120-13	25-23-01-027	58-560000-89	35-00-23-002
58-530083-3	52-10-02	58-530120-15	25-23-01-029	58-560000-91	35-00-23-012
58-530085-1	56-10-10	58-530120-15	25-23-01-037	58-560011-43	35-00-01-007A
58-530085-3	56-10-10	58-530120-5	25-23-01	58-560011-45	35-00-01-007B
58-530085-3	25-23-01	58-530120-5	25-23-01	58-560012	35-00-24
58-530086-1	56-10-10	58-530123-1	25-21-30	58-560012-1	35-00-23-023
58-530086-3	56-10-10-003A	58-530125-11	39-10-20	58-560012-3	35-00-23
58-530086-3	25-23-01-002A	58-530125-11	39-10-01	58-560012-5	35-00-23-024
58-530086-5	56-10-10	58-530125-15	39-10-01	58-560013	35-00-23-025
58-530087-1	56-10-10	58-530125-15	39-10-20	58-560013	35-00-24-052
58-530087-3	56-10-10-042	58-530125-3	39-10-01	58-560013	11-30-10-021
58-530087-3	25-23-01-004A	58-530125-5	39-10-01	58-590016-15	27-70-01-010
58-530087-3	52-20-01	58-530125-5	39-10-20	58-590016-19	27-70-01
58-530087-5	56-10-10	58-530125-9	39-10-20	58-590016-19	25-10-01-002
58-530088-1	56-10-10	58-530128-1	25-23-01	58-590016-21	27-70-01-011
58-530088-3	56-10-10	58-530134-03	52-10-02	58-590016-3	27-70-01-009
58-530088-3	25-23-01	58-530134-11	56-10-10	58-590017-3	27-70-01-015
58-530088-3	52-20-01	58-530134-11	56-10-10-043	58-590018-7	27-70-01-016
58-530088-5	56-10-10	58-530134-17	52-10-02	58-810012	32-10-20
58-530088-7	56-10-10	58-530134-9	52-10-02	58-810013	32-10-20
58-530090-7	56-20-01	58-530138-1	25-23-01	58-810015-1	32-30-01
58-530095-1	21-22-40-017	58-530139-1	25-23-01	58-820010	32-20-20
58-530096-1	21-22-40	58-530139-11	25-23-01-010	58-820013-3	32-20-05
58-530097-1	21-22-40	58-530139-3	25-23-01-008	58-910011-100	71-12-01-004
58-530098-1	21-22-40-001	58-530139-4	25-23-01	58-910011-100	71-10-01-004
58-530100-1	21-22-40-018	58-530139-5	25-23-01-009	58-910011-101	71-12-01
58-530101-1	21-22-40-012	58-530139-6	25-23-01	58-910011-101	71-10-01
58-530103-1	21-22-40	58-530139-7	25-23-01	58-910011-102	71-10-01-006
58-530104-1	21-22-40-013	58-530139-9	25-23-01-011	58-910011-102	71-12-01-006
58-530105-1	21-22-40-010	58-530140-1	25-23-01-007	58-910011-103	71-12-01
58-530106-7	21-22-40-002	58-530141-5	25-23-01-016	58-910011-103	71-10-01
58-530107-1	25-21-30	58-530148-1	11-30-10-048	58-910011-104	71-10-01-002
58-530107-3	25-21-30	58-530148-5	11-30-10	58-910011-104	71-12-01-002
58-530107-5	25-21-30	58-530220-1	39-10-20-030	58-910011-105	71-10-01-011
58-530107-601	25-21-30	58-550011-19	21-22-40	58-910011-105	71-12-01-013
58-530108-1	25-13-40	58-550011-21	21-22-40	58-910011-107	71-12-01
58-530108-15	25-20-20	58-550011-5	21-22-40	58-910011-107	71-10-01-012
58-530108-15	25-20-20	58-550011-9	21-22-40-027	58-910011-108	71-10-01
58-530108-17	25-20-20	58-550012-10	21-22-40-024	58-910011-108	71-12-01
58-530108-17	25-20-20	58-550012-9	21-22-40-023	58-910011-121	71-12-01
58-530108-29	25-20-20	58-550013-1	21-22-40-022	58-910011-121	71-10-01-014
58-530108-29	25-20-20	58-550014-3	21-22-40-028	58-910011-122	71-10-01
58-530108-31	25-20-20	58-550016-3	21-22-40-025	58-910011-122	71-12-01
58-530108-31	25-20-20	58-550018-11	53-50-10	58-910011-69	71-12-01

PART NUMBER	CHAP/SUB-SECT/UNIT & ITEM
58-910011-70	71-12-01
58-910011-71	71-12-01-010
58-910011-71	71-10-01-013
58-910011-77	71-12-01
58-910011-93	71-12-01-003
58-910011-93	71-10-01-003
58-910011-95	71-10-01-005
58-910011-95	71-12-01-005
58-910011-97	71-10-01-009
58-910011-97	71-12-01-009
58-910011-99	71-12-01
58-910011-99	71-10-01
58-910018-1	71-02-02-018
58-910018-3	71-02-02
58-910018-5	71-72-01
58-910018-7	71-72-01
58-910019-1	71-02-01-035
58-910019-1	71-02-02-040
58-910021-1	71-02-02
58-910021-1	30-10-30-001
58-910021-1	36-10-01-013
58-910024	36-10-01
58-910024-1	30-10-30
58-910024-1	71-02-02
58-910024-3	71-02-02-020
58-910024-3	30-10-30
58-910024-3	36-10-01-003
58-910024-7	36-10-01-006
58-910024-9	71-02-02-025
58-910024-9	30-10-30-013
58-910024-9	36-10-01-005
58-920034-17	11-20-10
58-920034-19	11-20-10
58-920034-21	11-20-10
58-920034-21	11-20-01
58-920034-23	11-20-01
58-920034-23	11-20-10
58-920034-25	11-20-10
58-920034-27	11-20-10
58-920034-29	11-20-10
58-920034-29	11-20-01
58-920034-31	11-20-01
58-920034-31	11-20-10
58-920035-1	73-12-01-001
58-920035-1	28-20-01
58-940011-1	76-16-01
58-940012-1	76-15-01
58-940012-1	76-16-01
58-940012-3	76-15-01
58-940013-1	76-15-01
58-940013-1	76-16-01
58-940013-3	76-15-01
58-940016-1	76-15-01
58-940016-1	76-16-01
58-940016-3	76-15-01
58-940017-1	76-15-01
58-940017-1	76-16-01
58-940017-3	76-15-01
58-940018-1	76-16-01
58-940019-1	76-16-01
58-940020-1	76-16-01
58-940021-1	76-16-01
58-940022	76-16-01
58-940022-3	76-15-01
58-940023	76-16-01
58-940024	76-16-01
58-940025	76-16-01
58-940025	76-15-01-024
58-940025-1	76-15-01
58-940026	76-15-01-027
58-940026	76-16-01
58-940026-1	76-15-01
58-940027	76-15-01-028
58-940027	76-16-01
58-940027-1	76-15-01
58-940028	76-15-01-030
58-940028	76-16-01
58-940028-1	76-15-01
58-950000-20	78-13-01
58-950000-33	78-13-01-017
58-950000-41	78-13-01-011
58-970000	30-40-01
58-970000-11	30-40-01-007
58-970000-15	30-40-01-001
58-970000-19	30-40-01
58-970000-25	30-40-01
58-970000-29	30-40-01
58-970000-3	30-40-01
58-970000-55	30-40-01-004
58-970000-57	30-40-01
5801N21	21-40-60-021
5801N4	21-40-60
5803J13	21-40-60-033
5833B	21-40-60-001
5869064B	21-22-10-030
5869064B	21-22-20-029
59-022-094-0375	76-15-01-004
593D6	21-40-60-003
6.50 X 8 6P TL	32-10-10-064
6.50X8	32-10-20
6.50X8 6P TL	32-10-20-054
6.50X8 6P TT	32-10-20
6.50X8 8P TT	32-10-20
6-32 X 1/4	33-44-10
6-32 X 1/4	33-44-10
6-32 X 3/4	33-40-08-005
6-32 X 3/8	33-44-10-018
6-32X3/4LG	30-62-01-013
6-32X3/4LG	30-64-01-013
6C5X-D	28-20-50-024
6C6BX-S	61-24-01-009
6K45	53-16-51
6LC-C6	32-10-20
6LC-C6	53-17-01
6LC-C8	53-17-50
6LC-C8	57-10-30
6LC-C8	57-10-30
6LC-C8	53-17-01
6LC-C8	53-17-01
6S	25-22-01
6S	25-22-05
6S	25-22-05
S 60-1038	33-44-10
60-130017-3	57-20-15-020
60-130017-4	57-20-15
60-130017-5	57-20-15-022
60-130017-6	57-20-15
60-1750-3	33-44-10-003
60-2038	33-44-10-002
60-320000-25	36-10-10-047
60-324075-1	11-30-10-033
60-324075-11	39-14-30-020
60-324075-5	11-30-10-034
60-324075-7	39-14-30-021
60-360015-10	57-20-21
60-360015-10	57-30-01
60-360015-10	57-20-22
60-360015-7	57-20-22
60-360015-7	57-30-01
60-360015-7	57-20-21
60-360015-8	57-20-22
60-360015-8	57-20-21
60-360015-8	57-30-01
60-360015-9	57-20-22
60-360015-9	57-30-01
60-360015-9	57-20-21
60-364011	53-25-01
60-364011	32-60-01
60-364011-1	32-60-01-033
60-364011-11	32-60-01-037
60-364011-13	32-60-01-035
60-364011-15	32-60-01-031
60-364011-17	32-60-01
60-364011-3	32-60-01
60-364011-9	32-60-01
60-364012-601	32-60-01-011
60-384013-5	52-35-02-006
60-384013-7	52-35-02
60-384016-3	32-20-20-048
60-384022	27-50-20-056
60-389017-1	71-00-02
60-389017-1	71-00-03
60-389017-1	24-00-01-018
60-400011-7	52-35-02-016
60-400011-7	52-10-02
60-410052-1	52-35-02-008
60-524080-10	27-10-20
60-524080-13	27-10-20-028
60-524080-14	27-10-20
60-524080-9	27-10-20
60-524185-1	27-10-01
60-524185-2	27-10-01
60-526013-1	27-20-10-016
60-530013-11	25-20-20-004
60-530013-41	25-20-20-022
60-530013-41	25-13-40-031
60-530013-41	25-13-20-041
60-530013-41	25-13-30-029
60-530013-49	25-13-10-061
60-530013-49	25-20-10-046
60-530013-93	25-13-40-015
60-530013-93	25-13-20-018
60-530013-93	25-13-30-015
60-530019-55	25-21-30-018
60-530019-67	25-21-30-015
60-530039-1	25-21-30-014
60-530039-2	25-21-30
60-530039-3	25-13-40-023
60-530039-3	25-20-20-014
60-530039-3	25-13-30-026
60-530039-3	25-13-20-031
60-530039-4	25-13-20-032
60-530039-4	25-13-30-027
60-530039-4	25-20-20-015
60-530039-4	25-13-40-024
60-530040-1	25-13-40-002
60-530040-1	25-20-20-002
60-530040-1	25-21-30-032
60-530040-1	25-13-30-002
60-530040-1	25-13-20-003
60-530041-1	25-13-20-056
60-530041-1	25-20-20-020
60-530041-1	25-13-30-049
60-530041-1	25-13-40-042
60-530042	25-20-20
60-530042	25-13-20
60-530042-1	25-13-20-001
60-530042-1	25-20-20
60-530042-13	25-20-20
60-530042-13	25-13-20-002
60-530042-15	25-13-20
60-530042-15	25-20-20
60-530042-9	25-20-20
60-530042-9	25-13-20-004
60-530043	25-20-20-026
60-530043-3	25-13-20-033

PART NUMBER	CHAP/SUB-SECT/UNIT & ITEM	PART NUMBER	CHAP/SUB-SECT/UNIT & ITEM	PART NUMBER	CHAP/SUB-SECT/UNIT & ITEM
60-530043-5	25-13-30-034	60-530139-15	25-23-01-098	60-820056	32-20-20-034
60-530043-5	25-21-30-023	60-530139-15	25-23-01	60-820064-1	32-20-20-049
60-530043-5	25-13-40-025	60-530139-15	25-23-01-112	60-820065	32-20-20-038
60-530044	25-13-20-039	60-530139-17	25-23-01	60-820067	32-20-20-040
60-530045	25-13-20-040	60-530139-19	25-23-01	60-820067	32-20-20
60-530045	25-13-30-033	60-530139-2	25-23-01	60-820068	32-20-20-041
60-530045	25-13-40-030	60-530139-21	25-23-01	60B095-001	28-20-60-013
60-530045	25-21-30-019	60-530139-21	25-23-01-105	600-001-10	28-20-60-008
60-530045	25-20-20-028	60-530139-21	25-23-01-119	601-009-980	39-14-30-017
60-530046-1	25-21-30-025	60-530139-21	25-23-01	601-009-980	39-14-10-008
60-530046-1	25-13-40-027	60-530139-25	25-23-01	6041H189	24-00-01-032
60-530046-1	25-20-20-023	60-530139-25	25-23-01	6041H190	24-00-01-038
60-530046-1	25-13-20-036	60-530139-25	25-23-01	6041H190	24-01-01-016
60-530046-2	25-13-20-037	60-530139-25	25-23-01	6041H190	71-00-01
60-530046-2	25-20-20-024	60-530139-27	25-23-01	6041H190	71-00-02
60-530046-2	25-13-40-028	60-530139-27	25-23-01-099	6041H190	71-00-03
60-530046-2	25-21-30	60-530139-27	25-23-01-113	6041H190	71-02-01
60-530047	25-13-20-042	60-530139-27	25-23-01	6046H39A	24-00-01-026
60-530051-1	25-20-20-018	60-530139-29	25-23-01-114	6050	39-14-70
60-530051-3	25-13-40-034	60-530139-29	25-23-01	60618-1	57-20-23
60-530051-3	25-13-30-038	60-530139-29	25-23-01	S 61-1008	33-44-10
60-530051-3	25-13-20-044	60-530139-29	25-23-01-100	61-2008	33-44-10
60-530052	25-13-20-050	60-530139-3	25-23-01	61-22	32-40-22-001
60-530052	25-13-30-041	60-530139-3	25-23-01	61009-1	24-00-01
60-530052	25-13-40-037	60-530139-31	25-23-01	61010-1	24-00-01
60-530052-1	25-13-20-047	60-530139-31	25-23-01-101	61010-1	24-00-01
60-530052-3	25-13-40	60-530139-31	25-23-01-115	S 62-1038	33-44-10
60-530052-3	25-13-30	60-530139-31	25-23-01	62-17	32-40-22-002
60-530052-3	25-20-20-016	60-530139-33	25-23-01	62-2038	33-44-10
60-530054-1	25-20-20-019	60-530139-33	25-23-01	624	39-10-30-003
60-530054-1	25-13-30-047	60-530139-33	25-23-01	625765	71-00-03
60-530054-1	25-13-40-043	60-530139-33	25-23-01	625765	71-02-01
60-530054-1	25-13-20-057	60-530139-35	25-23-01	626062-2	71-00-01
60-530060-1	25-23-01	60-530139-35	25-23-01-108	626062-2	71-00-02
60-530060-1	25-23-01	60-530139-35	25-23-01-122	626189	71-00-01
60-530060-3	25-23-01	60-530139-35	25-23-01	627377	71-00-01
60-530060-3	25-23-01	60-530139-37	25-23-01-120	627377	24-30-10-040
60-530060-5	25-23-01	60-530139-37	25-23-01	627377	71-00-03
60-530060-5	25-23-01-031	60-530139-37	25-23-01	627377	71-00-02
60-530060-7	25-23-01-030	60-530139-37	25-23-01-106	627804	71-00-01
60-530060-7	25-23-01	60-530139-4	25-23-01	627804	71-00-02
60-530060-9	25-23-01	60-530139-4	25-23-01	627805	71-00-02
60-530060-9	25-23-01-033	60-530139-5	25-23-01	627805	71-00-01-006
60-530139-1	25-23-01	60-530139-5	25-23-01	628005	71-00-01
60-530139-1	25-23-01	60-530139-6	25-23-01	628005	71-00-02
60-530139-1	25-23-01	60-530139-6	25-23-01	628005	71-00-03
60-530139-10	25-23-01	60-530139-7	25-23-01	628260	78-13-01
60-530139-10	25-23-01	60-530139-7	25-23-01	629327-1	71-00-02-008
60-530139-11	25-23-01	60-530139-8	25-23-01	629327-1	71-00-03-008
60-530139-11	25-23-01	60-530139-9	25-23-01	629327-1	71-00-01-008
60-530139-11	25-23-01	60-530139-9	25-23-01	629327-2	71-00-01
60-530139-11	25-23-01	60-810081-1	32-30-01	629327-2	71-00-03
60-530139-117	25-23-01	60-820018	32-20-20	629327-2	71-00-02
60-530139-119	25-23-01	60-820018-1	32-20-20-013	629436	71-02-01
60-530139-121	25-23-01	60-820018-3	32-20-20-015	629436	71-02-02
60-530139-121	25-23-01	60-820018-3	32-20-20-020	630763	71-02-02
60-530139-123	25-23-01	60-820025-11	32-20-20	630763	71-02-01
60-530139-125	25-23-01	60-820025-9	32-20-20	630916	71-02-01
60-530139-127	25-23-01	60-820026	32-20-20-039	630916	71-02-02
60-530139-127	25-23-01-103	60-820026-1	32-20-20	631970-3L	71-02-02
60-530139-127	25-23-01-117	60-820029-1	32-20-20-021	631970-3L	71-02-01
60-530139-127	25-23-01	60-820029-3	32-20-20-016	632266	71-02-01
60-530139-129	25-23-01-118	60-820031-11	32-50-01	632266	71-02-02
60-530139-129	25-23-01	60-820031-11	27-20-20	632399	71-02-02
60-530139-129	25-23-01	60-820032-1	32-20-20-042	632399	71-02-01
60-530139-129	25-23-01-104	60-820032-3	32-20-20-043	632881	71-02-01
60-530139-13	25-23-01	60-820032-5	32-20-20-044	632881	71-02-02
60-530139-13	25-23-01-111	60-820039	32-20-20-058	633233-5	71-02-02-011
60-530139-131	25-23-01-097	60-820051-11	32-20-20-045	633233-5	71-02-01-011
60-530139-14	25-23-01	60-820051-5	32-20-20	633233-6	71-02-01
60-530139-14	25-23-01	60-820051-7	32-20-20-047	633233-6	71-02-02
60-530139-15	25-23-01	60-820054-1	32-20-20-032	633288	71-02-02

PART NUMBER	CHAP/SUB-SECT/UNIT & ITEM	PART NUMBER	CHAP/SUB-SECT/UNIT & ITEM	PART NUMBER	CHAP/SUB-SECT/UNIT & ITEM
633288	71-02-01	78BFM0	61-10-01-008	90-1-2	33-10-01
633311	71-02-01	78FF-0	61-12-01-007	90-28	24-00-01-027
633311	71-00-03	78FF-0	61-10-02-007	90-380010-5	32-60-01-021
633311	71-02-02	78RS8	33-44-01-018	90-380010-7	32-60-01-020
634571	71-00-03	789-4	32-40-31-051	90-380020-1	27-50-01
634571	71-00-01	789-4	32-40-30	90-380020-3	27-50-01-009
634571	71-00-02	79-022-094-0375	28-20-50-007	9095	39-14-70
635135-3	71-00-02	79-022-094-0375	32-40-61-011	91-27	32-40-22
635135-3	71-00-03	79-022-094-0750	28-20-50-014	92-18	32-40-22
635996	71-02-01-007	79-032-156-0562	52-32-01-005	93-324040	11-30-10-049
635996	71-02-02-007	791-2-4	32-30-01	9421424	24-30-10-022
636140	71-00-03	7978	32-30-30-018	9461	52-10-01-041
636141	71-00-03	8-327N300-9	32-20-20-037	95-000011	11-20-01
636141	71-02-01	8N8D	71-66-01-008	95-100000-1	57-40-01
636141	71-02-02-009	8X4075/D/	24-30-01-018	95-100000-2	57-40-01
636603	71-02-02	800308	35-00-22	95-110005-610	57-20-05
636603	71-02-01	800311	35-00-22-071	95-110005-619	57-20-01
636951	71-02-01	800316	35-00-22-065	95-110005-620	57-20-01
636952	71-00-03	800316	35-00-22-048	95-110007-721	57-10-10
636952	71-00-02-006	800322-00	35-00-24-009	95-110007-722	57-10-10
638154-2A4	71-02-01-008	800327-01	35-00-22-043	95-110011-3	57-10-10-049
638154-2A4	71-02-02-008	800623-02	35-00-24	95-110011-4	57-10-10
638156-3A16	71-00-03	800623-02	35-00-23	95-110013-1	57-20-01-001
639151	71-00-03-009	800717-00	35-00-23-026	95-110013-1	57-10-20
639151	71-00-02-009	800717-00	35-00-24-053	95-110013-1	57-10-01
639151	71-00-01-009	800777-02	35-00-24	95-110013-10	57-10-20
639177A1	71-02-01-012	800777-02	35-00-23	95-110013-11	57-10-20
639177A1	71-02-02-011A	801118-00	35-00-24-006	95-110013-12	57-10-20
640031	71-00-03-006	801144-01	35-00-23	95-110013-13	57-10-20-004
64017	39-17-30-030	801144-01	35-00-24	95-110013-14	57-10-20
6411B	25-21-30	801145-00	35-00-23	95-110013-15	57-10-20-024
6411B	25-22-01-092	801145-00	35-00-24	95-110013-17	57-10-20-044
6411B	25-22-01-112	8047	32-30-30-005	95-110013-19	57-10-20-023
6411B	25-22-05-080	8058	32-30-30	95-110013-2	57-20-01
6411B	25-22-05	809945	24-30-10-032	95-110013-2	57-10-20
6411B	25-22-05-084	81-2	32-40-22-011	95-110013-2	57-10-01
6411B	25-50-01-004	81A16758	53-30-01	95-110013-20	57-10-20
6411B	25-50-01-006	81009-1	24-00-01	95-110013-21	57-10-20
6411B	25-50-01-013	8146	53-10-01	95-110013-22	57-10-20
65-050	30-62-01	8146	53-11-01	95-110013-23	57-10-20
65-050	30-64-01	826319	24-30-10-034	95-110013-23	57-10-20
65-055	30-64-01	836-36P	30-60-01	95-110013-24	57-10-20
65-055	30-62-01	836-36P	61-10-04	95-110013-24	57-10-20
65-30	32-40-22-017	836-36P	71-00-03	95-110013-3	57-10-20
6591	53-25-01	836-36P	71-00-02	95-110013-5	57-10-20-003
6591	53-25-01	836-37P	71-00-03	95-110013-6	57-10-20
66-17	32-40-22-007	836-37P	61-10-04	95-110013-605	57-10-20
66-22	32-40-22-008	836-37P	71-00-02	95-110013-606	57-10-20
69-4	32-40-22-009	840-83	61-10-04-001	95-110013-607	57-10-20
7/32 DIA	32-40-61-006	8409	27-10-20	95-110013-608	57-10-20
70-117224	24-40-01-008	846FB1/4-1/8	39-17-10-026	95-110013-609	57-10-20
7155	25-22-01	846FB1/4-1/8	39-17-20-017	95-110013-610	57-10-20
72F	35-00-21-013	846FB1/4-1/8	39-17-30-016	95-110013-611	57-10-20
7270-6-5	53-50-01	8507	33-44-01-019	95-110013-612	57-10-20
7274-2-10	39-14-40-027	8540	35-00-23-027	95-110013-613	57-10-20
7277-2-3	27-30-30	8540	35-00-24-054	95-110013-614	57-10-20
7277-2-5	30-60-01	855S1A4DS-P6HS	39-14-30-010	95-110013-615	57-10-20
7277-2-5	30-10-30	855S1R2DS-P6	39-14-10-011	95-110013-616	57-10-20
73-13	32-40-22-005	855S1R2DS-P6HS	39-14-30-009	95-110013-7	57-10-20-006
734-1	39-14-50	8570	35-00-24-055	95-110013-8	57-10-20
734-183864	39-14-01-030	8570	35-00-23-028	95-110013-9	57-10-20-008
734-183864	27-50-20-047	8580	35-00-01-012	95-110014-10	57-10-10
734-183864	27-50-20	88	27-10-01-010	95-110014-101	57-10-10
74-12	32-40-22-006	88-1	32-40-22-004	95-110014-102	57-10-10
7469	32-30-30-002	8801K13	39-10-30-027	95-110014-103	57-10-10
75 OHM 10W	30-60-01	8857K40	27-50-20-014	95-110014-104	57-10-10
75-40	32-40-22	8857K44	53-25-01-070	95-110014-105	57-10-10
766-4	32-40-30-035	8906K1019	39-10-30-019	95-110014-106	57-10-10
766-6	57-10-10-116	8906K754	39-14-70	95-110014-11	57-10-10-091
7756415	56-10-10	8906K754	39-14-70-005	95-110014-111	57-20-15-019
7756415	56-10-10	8906K762	39-10-30-020	95-110014-112	57-20-15
7760598	21-40-20-013	9-1406-45	32-20-20-050	95-110014-119	57-20-15-044

PART NUMBER	CHAP/SUB-SECT/UNIT & ITEM
95-110014-12	57-10-10
95-110014-120	57-20-15
95-110014-121	57-20-15-056
95-110014-122	57-20-15
95-110014-123	57-10-30-028
95-110014-124	57-10-30
95-110014-125	57-10-30-029
95-110014-126	57-10-30
95-110014-129	57-20-15-045
95-110014-13	57-10-10-094
95-110014-130	57-20-15
95-110014-131	57-10-30-030
95-110014-132	57-10-30
95-110014-135	57-20-15-046
95-110014-139	57-10-10-016
95-110014-14	57-10-10
95-110014-142	57-10-10
95-110014-143	57-10-10-017
95-110014-146	57-10-10
95-110014-147	57-10-10
95-110014-15	57-10-10-095
95-110014-150	57-10-10
95-110014-151	57-10-10
95-110014-153	57-20-15-047
95-110014-154	57-20-15
95-110014-155	57-10-30-031
95-110014-156	57-10-30
95-110014-157	57-10-10
95-110014-158	57-10-10
95-110014-159	57-10-10-040
95-110014-16	57-10-10
95-110014-160	57-10-10
95-110014-161	57-10-10-036
95-110014-161	57-30-01-016
95-110014-162	57-30-01-017
95-110014-162	57-10-10
95-110014-163	57-10-10-037
95-110014-164	57-10-10
95-110014-165	57-10-10
95-110014-166	57-10-10
95-110014-167	57-20-15-048
95-110014-168	57-20-15
95-110014-169	57-30-01-014
95-110014-169	57-10-10-015
95-110014-17	57-10-10-092
95-110014-172	57-10-10
95-110014-172	57-30-01-015
95-110014-175	57-10-10
95-110014-176	57-10-10
95-110014-177	57-10-10
95-110014-178	57-10-10
95-110014-179	57-10-10
95-110014-18	57-10-10
95-110014-180	57-10-10
95-110014-181	57-10-10
95-110014-182	57-10-10
95-110014-183	57-20-15-064
95-110014-184	57-20-15
95-110014-185	57-10-10
95-110014-186	57-10-10
95-110014-187	57-10-10-025
95-110014-188	57-10-10
95-110014-189	57-10-10
95-110014-19	57-10-10-098
95-110014-190	57-10-10
95-110014-191	57-20-15-049
95-110014-192	57-20-15
95-110014-193	57-20-15-066
95-110014-194	57-20-15
95-110014-197	57-10-10-046
95-110014-198	57-10-10
95-110014-199	57-20-15
95-110014-199	57-30-01-018
95-110014-20	57-10-10
95-110014-200	57-30-01-019
95-110014-200	57-20-15
95-110014-203	57-30-01-022
95-110014-203	57-10-10-056
95-110014-204	57-10-10
95-110014-204	57-30-01-023
95-110014-205	57-30-01-026
95-110014-205	57-10-10-062
95-110014-206	57-10-10
95-110014-206	57-30-01-027
95-110014-207	57-30-01-024
95-110014-207	57-10-10
95-110014-208	57-10-10
95-110014-208	57-30-01-025
95-110014-209	57-30-01-028
95-110014-209	57-10-10-069
95-110014-21	57-10-10
95-110014-210	57-10-10
95-110014-210	57-30-01-029
95-110014-211	57-30-01-030
95-110014-211	57-20-15
95-110014-212	57-20-15
95-110014-212	57-30-01-031
95-110014-219	57-10-10-059
95-110014-22	57-10-10
95-110014-220	57-10-10
95-110014-221	57-10-10-066
95-110014-222	57-10-10
95-110014-223	57-10-10-074
95-110014-224	57-10-10
95-110014-225	57-10-10-064
95-110014-226	57-10-10
95-110014-227	57-10-10-063
95-110014-228	57-10-10
95-110014-229	57-10-10-065
95-110014-23	57-10-10-097
95-110014-230	57-10-10
95-110014-235	57-10-10-071
95-110014-236	57-10-10
95-110014-237	57-10-10
95-110014-238	57-10-10
95-110014-24	57-10-10
95-110014-240	57-10-10
95-110014-241	57-10-10-072
95-110014-242	57-10-10
95-110014-243	57-10-10
95-110014-244	57-10-10
95-110014-245	57-20-15-052
95-110014-246	57-20-15
95-110014-247	57-10-10-054
95-110014-249	57-10-10
95-110014-25	57-10-10
95-110014-250	57-10-10
95-110014-251	57-10-10-082
95-110014-252	57-10-10
95-110014-253	57-10-10-080
95-110014-253	55-11-01-064
95-110014-253	55-10-01-056
95-110014-253	57-10-01-016
95-110014-253	53-32-01-041
95-110014-255	57-10-10
95-110014-256	57-10-10
95-110014-26	57-10-10
95-110014-260	57-30-01-013
95-110014-263	57-10-10-075
95-110014-264	57-10-10
95-110014-265	57-10-10-022
95-110014-268	57-10-10
95-110014-269	57-10-10-024
95-110014-27	57-20-15-051
95-110014-270	57-10-10
95-110014-271	57-20-15
95-110014-271	57-30-01
95-110014-274	57-30-01
95-110014-274	57-20-15
95-110014-275	57-10-10
95-110014-276	57-10-10
95-110014-277	57-20-15-053
95-110014-279	57-20-15-054
95-110014-28	57-20-15
95-110014-280	57-20-15
95-110014-281	57-10-10
95-110014-282	57-10-10
95-110014-283	57-10-10
95-110014-284	57-10-10
95-110014-285	57-10-10
95-110014-286	57-10-10
95-110014-287	57-10-10
95-110014-288	57-10-10
95-110014-289	57-10-10
95-110014-29	57-20-15-027
95-110014-290	57-10-10
95-110014-293	57-20-15-055
95-110014-294	57-20-15
95-110014-295	57-10-10-012
95-110014-296	57-10-10
95-110014-297	57-10-10-068
95-110014-298	57-10-10
95-110014-299	57-10-30-032
95-110014-3	57-10-10-090
95-110014-30	57-20-15
95-110014-300	57-10-30
95-110014-304	57-20-15-033
95-110014-306	57-20-15-034
95-110014-31	57-20-15-026
95-110014-319	57-10-10
95-110014-32	57-20-15
95-110014-321	57-10-10-067
95-110014-322	57-10-10
95-110014-323	57-20-15-038
95-110014-323	57-30-01-032
95-110014-324	57-30-01-033
95-110014-324	57-20-15
95-110014-325	57-10-10
95-110014-327	57-10-10
95-110014-329	57-10-10
95-110014-331	57-10-10
95-110014-333	57-10-10
95-110014-335	57-10-10
95-110014-336	57-10-10
95-110014-337	57-10-10-110
95-110014-339	57-10-01
95-110014-341	57-10-01-009
95-110014-343	57-10-10
95-110014-344	57-10-10
95-110014-345	57-10-10
95-110014-347	57-10-10
95-110014-348	57-10-10
95-110014-349	57-10-10
95-110014-350	57-10-10
95-110014-353	57-10-10-058
95-110014-353	57-10-01-012
95-110014-355	57-10-01-010
95-110014-357	57-10-10-031
95-110014-358	57-10-10
95-110014-367	57-10-10-042
95-110014-369	57-20-15-043
95-110014-37	57-20-15-057
95-110014-371	57-20-15
95-110014-373	57-20-15-070
95-110014-375	57-20-15-069
95-110014-377	57-10-10-048

PART NUMBER	CHAP/SUB-SECT/UNIT & ITEM	PART NUMBER	CHAP/SUB-SECT/UNIT & ITEM	PART NUMBER	CHAP/SUB-SECT/UNIT & ITEM
95-110014-378	57-10-10	95-110014-604	57-10-10	95-110014-706	57-20-15
95-110014-379	57-10-10-083	95-110014-605	57-10-10	95-110014-706	57-10-10
95-110014-38	57-20-15	95-110014-605	57-20-15	95-110014-707	57-10-10
95-110014-380	57-10-10	95-110014-606	57-20-15	95-110014-707	57-10-01
95-110014-381	57-10-10	95-110014-606	57-10-10	95-110014-708	57-10-01
95-110014-381	53-32-01	95-110014-61	57-20-15-060	95-110014-708	57-10-10
95-110014-381	53-11-01	95-110014-612	57-10-10-052	95-110014-71	57-10-10
95-110014-382	57-10-10	95-110014-613	57-10-10-033	95-110014-72	57-10-10
95-110014-383	57-10-10-079	95-110014-614	57-10-10	95-110014-727	57-10-10
95-110014-383	55-11-01-063	95-110014-615	57-10-10-039	95-110014-727	57-20-15
95-110014-383	55-10-01-054	95-110014-616	57-10-10	95-110014-728	57-20-15
95-110014-384	55-10-01-055	95-110014-617	57-10-10-043	95-110014-728	57-10-10
95-110014-384	55-11-01	95-110014-618	57-10-10	95-110014-73	57-20-15-061
95-110014-384	57-10-10	95-110014-619	57-10-10-045	95-110014-74	57-20-15
95-110014-39	57-10-10	95-110014-62	57-20-15	95-110014-75	57-10-10
95-110014-4	57-10-10	95-110014-620	57-10-10	95-110014-751	57-20-15
95-110014-40	57-10-10	95-110014-623	57-10-10-028	95-110014-752	57-20-15
95-110014-41	57-20-15-041	95-110014-624	57-10-10	95-110014-76	57-10-10
95-110014-42	57-20-15	95-110014-626	57-20-15	95-110014-765	57-20-15
95-110014-420	57-20-15	95-110014-627	57-10-10-038	95-110014-765	57-30-01
95-110014-420	57-30-01-021	95-110014-628	57-10-10	95-110014-766	57-30-01
95-110014-421	57-30-01	95-110014-629	57-10-10-087	95-110014-766	57-20-15
95-110014-423	57-30-01	95-110014-63	57-20-15-042	95-110014-79	57-10-10
95-110014-423	57-20-15	95-110014-630	57-10-10	95-110014-8	57-10-10
95-110014-424	57-20-15	95-110014-631	57-10-10-088	95-110014-80	57-10-10
95-110014-424	57-30-01	95-110014-632	57-10-10	95-110014-805	57-10-10
95-110014-425	57-10-10-002	95-110014-633	57-10-10-089	95-110014-81	57-10-10
95-110014-43	57-10-10	95-110014-634	57-10-10	95-110014-82	57-10-10
95-110014-431	57-10-10-001	95-110014-637	57-20-15	95-110014-83	57-10-10
95-110014-433	57-10-10	95-110014-638	57-20-15	95-110014-84	57-10-10
95-110014-435	57-10-10-060	95-110014-639	57-10-10-047	95-110014-89	57-20-15-062
95-110014-436	57-10-10	95-110014-64	57-20-15	95-110014-9	57-10-10-093
95-110014-44	57-10-10	95-110014-640	57-10-10	95-110014-90	57-20-15
95-110014-449	57-10-10-061	95-110014-641	57-10-10-030	95-110014-901	57-10-10-044
95-110014-45	57-10-10	95-110014-642	57-10-10	95-110014-902	57-10-10
95-110014-46	57-10-10	95-110014-647	57-10-10-018	95-110014-903	57-10-10-041
95-110014-477	57-10-10	95-110014-648	57-10-10	95-110014-904	57-10-10
95-110014-477	57-30-01	95-110014-649	57-10-10-055	95-110014-905	57-10-10-029
95-110014-478	57-30-01	95-110014-65	57-10-10	95-110014-906	57-10-10
95-110014-478	57-10-10	95-110014-650	57-10-10	95-110014-907	57-10-10-077
95-110014-49	57-10-10	95-110014-651	57-10-10-057	95-110014-908	57-10-10
95-110014-5	57-10-10	95-110014-652	57-10-10	95-110014-91	57-10-10
95-110014-50	57-10-10	95-110014-653	57-10-10-108	95-110014-911	57-10-10-078
95-110014-51	57-10-10	95-110014-654	57-10-10	95-110014-912	57-10-10
95-110014-517	57-10-10-019	95-110014-655	57-10-10-070	95-110014-92	57-10-10
95-110014-52	57-10-10	95-110014-656	57-10-10	95-110014-929	57-20-15-063
95-110014-53	57-10-10	95-110014-657	57-10-10-086	95-110014-93	57-10-10
95-110014-537	57-10-10	95-110014-658	57-10-10	95-110014-930	57-20-15
95-110014-537	57-30-01	95-110014-659	57-10-10-073	95-110014-937	57-10-10-115
95-110014-538	57-30-01	95-110014-66	57-10-10	95-110014-94	57-10-10
95-110014-538	57-10-10	95-110014-660	57-10-10	95-110014-941	57-20-15
95-110014-54	57-10-10	95-110014-67	57-10-10	95-110014-942	57-20-15
95-110014-55	57-10-10	95-110014-68	57-10-10	95-110014-943	57-20-15
95-110014-553	57-20-15	95-110014-687	57-10-10	95-110014-945	57-20-15
95-110014-555	57-20-15	95-110014-687	57-10-01-002	95-110014-947	57-20-15-037
95-110014-557	57-20-15	95-110014-688	57-10-01	95-110014-947	57-30-01-020
95-110014-559	57-20-15	95-110014-688	57-10-10	95-110014-948	57-30-01
95-110014-56	57-10-10	95-110014-69	57-10-10	95-110014-948	57-20-15
95-110014-561	57-20-15	95-110014-695	57-20-15	95-110014-949	57-20-15
95-110014-563	57-20-15	95-110014-695	57-30-01	95-110014-95	57-10-10
95-110014-565	57-20-15-039	95-110014-698	57-30-01	95-110014-96	57-10-10
95-110014-566	57-20-15	95-110014-698	57-20-15	95-110015-10	57-20-05
95-110014-567	57-20-15-040	95-110014-699	57-10-10	95-110015-10	57-20-06
95-110014-568	57-20-15	95-110014-7	57-10-10	95-110015-101	57-20-06-076
95-110014-57	57-10-10	95-110014-7	57-10-10-096	95-110015-101	57-20-05-055
95-110014-58	57-10-10	95-110014-70	57-10-10	95-110015-101	57-30-01-005
95-110014-59	57-10-10	95-110014-701	57-10-10	95-110015-102	57-30-01-006
95-110014-6	57-10-10	95-110014-702	57-10-10	95-110015-102	57-20-05
95-110014-6	57-10-10	95-110014-703	57-10-10	95-110015-102	57-20-06
95-110014-601	57-10-10	95-110014-704	57-10-10	95-110015-105	57-20-06-079
95-110014-602	57-10-10	95-110014-705	57-10-10	95-110015-105	57-20-05-058
95-110014-603	57-10-10	95-110014-705	57-20-15	95-110015-106	57-20-05

PART NUMBER	CHAP/SUB-SECT/UNIT & ITEM	PART NUMBER	CHAP/SUB-SECT/UNIT & ITEM	PART NUMBER	CHAP/SUB-SECT/UNIT & ITEM
95-110015-106	57-20-06	95-110015-18	57-20-05	95-110015-87	57-30-01-011
95-110015-107	57-20-06-080	95-110015-18	57-20-06	95-110015-9	57-20-05-039
95-110015-107	57-20-05-059	95-110015-180	57-20-05	95-110015-9	57-20-06-055
95-110015-107	57-30-01-007	95-110015-180	57-30-01	95-110015-93	57-20-01-006
95-110015-108	57-30-01-008	95-110015-181	57-20-05-062	95-110015-94	57-20-01
95-110015-108	57-20-05	95-110015-181	57-20-06-082	95-110016-1	57-10-30-004
95-110015-108	57-20-06	95-110015-182	57-20-06	95-110016-2	57-10-30
95-110015-11	57-20-06-056	95-110015-182	57-20-05	95-110017-1	57-10-30-005
95-110015-11	57-20-05-040	95-110015-185	57-20-06	95-110017-2	57-10-30
95-110015-113	57-20-05	95-110015-185	57-20-01-012	95-110018	57-20-05-080
95-110015-114	57-20-05	95-110015-187	57-20-10-047	95-110018	57-20-06-091
95-110015-117	57-20-05-063	95-110015-188	57-20-10	95-110019-1	57-10-30
95-110015-117	57-20-06-083	95-110015-19	57-20-06-061	95-110019-2	57-10-30
95-110015-118	57-20-06	95-110015-19	57-20-05-045	95-110019-3	57-10-30-006
95-110015-118	57-20-05	95-110015-20	57-20-05	95-110019-4	57-10-30
95-110015-119	57-20-10-026	95-110015-20	57-20-06	95-110020-1	57-10-30
95-110015-121	57-20-10	95-110015-21	57-20-06-062	95-110020-2	57-10-30
95-110015-123	57-20-05-023	95-110015-21	57-20-05-046	95-110020-3	57-10-30-009
95-110015-13	57-20-05-041	95-110015-22	57-20-05	95-110020-4	57-10-30
95-110015-13	57-20-06-057	95-110015-22	57-20-06	95-110022-10	57-10-30
95-110015-139	57-20-10-007	95-110015-23	57-20-06-063	95-110022-11	57-10-30-001
95-110015-14	57-20-05	95-110015-23	57-20-05-047	95-110022-12	57-10-30
95-110015-14	57-20-06	95-110015-24	57-20-05	95-110022-13	57-10-30-002
95-110015-140	57-20-10	95-110015-24	57-20-06	95-110022-14	57-10-30
95-110015-143	57-20-10-020	95-110015-25	57-20-06-064	95-110022-17	57-10-30-015
95-110015-144	57-20-10	95-110015-25	57-20-05-048	95-110022-19	57-10-30-016
95-110015-145	57-20-10-022	95-110015-26	57-20-05	95-110022-21	57-10-30-017
95-110015-146	57-20-10	95-110015-26	57-20-06	95-110022-23	57-10-30-018
95-110015-147	57-20-10-024	95-110015-27	57-20-06-065	95-110022-25	57-10-30-020
95-110015-148	57-20-10	95-110015-27	57-20-05-049	95-110022-26	57-10-30
95-110015-149	57-20-10-034	95-110015-28	57-20-05	95-110022-27	57-10-30-021
95-110015-15	57-20-05-043	95-110015-28	57-20-06	95-110022-29	57-10-30-022
95-110015-15	57-20-06-059	95-110015-29	57-20-06-066	95-110022-3	57-10-30-011
95-110015-150	57-20-10	95-110015-29	57-20-05-050	95-110022-31	57-10-30-023
95-110015-151	57-20-10-004	95-110015-30	57-20-05	95-110022-33	57-10-30-024
95-110015-152	57-20-10	95-110015-30	57-20-06	95-110022-35	57-10-30-025
95-110015-153	57-20-10	95-110015-31	57-20-06-067	95-110022-37	57-20-15-002
95-110015-154	57-20-10	95-110015-31	57-20-05-051	95-110022-38	57-20-15
95-110015-155	57-20-10	95-110015-32	57-20-05	95-110022-39	57-20-15-003
95-110015-156	57-20-10	95-110015-32	57-20-06	95-110022-4	57-10-30
95-110015-157	57-20-10	95-110015-35	57-20-06-093	95-110022-40	57-20-15
95-110015-158	57-20-10	95-110015-35	57-20-05-052	95-110022-41	57-20-15-004
95-110015-16	57-20-05	95-110015-36	57-20-05	95-110022-42	57-20-15
95-110015-16	57-20-06	95-110015-36	57-20-06	95-110022-43	57-20-15-005
95-110015-165	57-20-06-077	95-110015-37	57-20-06	95-110022-44	57-20-15
95-110015-165	57-20-05-056	95-110015-37	57-20-10-049	95-110022-45	57-20-15-006
95-110015-165	57-30-01-001	95-110015-38	57-20-10	95-110022-47	57-20-15-007
95-110015-166	57-30-01-002	95-110015-38	57-20-06	95-110022-48	57-20-15
95-110015-166	57-20-05	95-110015-609	57-20-05	95-110022-49	57-20-15-008
95-110015-166	57-20-06	95-110015-611	57-20-10	95-110022-5	57-10-30-012
95-110015-167	57-20-06-068	95-110015-612	57-20-10	95-110022-50	57-20-15
95-110015-167	57-20-05-053	95-110015-613	57-20-05	95-110022-51	57-20-15-011
95-110015-168	57-20-05	95-110015-614	57-20-05	95-110022-52	57-20-15
95-110015-168	57-20-06	95-110015-619	57-20-05	95-110022-53	57-20-15-012
95-110015-17	57-20-06-060	95-110015-620	57-20-05	95-110022-54	57-20-15
95-110015-17	57-20-05-044	95-110015-65	57-20-05-014	95-110022-55	57-20-15-013
95-110015-171	57-20-05-057	95-110015-65	57-20-06-039	95-110022-57	57-20-15-014
95-110015-171	57-20-06-078	95-110015-66	57-20-06	95-110022-58	57-20-15
95-110015-171	57-30-01-003	95-110015-66	57-20-05	95-110022-59	57-20-15-015
95-110015-172	57-30-01-004	95-110015-67	57-20-05-015	95-110022-6	57-10-30
95-110015-172	57-20-06	95-110015-67	57-20-06-034	95-110022-60	57-20-15
95-110015-172	57-20-05	95-110015-68	57-20-06	95-110022-601	57-20-15-001
95-110015-173	57-20-05-054	95-110015-68	57-20-05	95-110022-601	57-10-30
95-110015-173	57-20-06-071	95-110015-69	57-20-05-016	95-110022-602	57-10-30
95-110015-174	57-20-06	95-110015-70	57-20-05	95-110022-602	57-20-15
95-110015-174	57-20-05	95-110015-72	57-20-05	95-110022-605	57-10-30
95-110015-177	57-20-05-060	95-110015-72	57-20-06	95-110022-606	57-10-30
95-110015-177	57-30-01-009	95-110015-73	57-20-05-006	95-110022-607	57-20-15
95-110015-178	57-30-01-010	95-110015-74	57-20-05	95-110022-608	57-20-15
95-110015-178	57-20-05	95-110015-81	57-20-10	95-110022-609	57-20-15
95-110015-179	57-20-05-061	95-110015-82	57-20-10	95-110022-61	57-20-15-016
95-110015-179	57-30-01	95-110015-87	57-20-10-036	95-110022-610	57-20-15

PART NUMBER	CHAP/SUB-SECT/UNIT & ITEM	PART NUMBER	CHAP/SUB-SECT/UNIT & ITEM	PART NUMBER	CHAP/SUB-SECT/UNIT & ITEM
95-110022-611	57-20-15	95-110031-11	32-10-30-033	95-110041-602	57-10-01
95-110022-611	57-10-30	95-110031-13	32-10-30-034	95-110041-602	57-20-05
95-110022-612	57-10-30	95-110031-13	57-10-10	95-110041-602	57-20-01
95-110022-612	57-20-15	95-110031-15	57-10-10	95-110041-605	57-20-01-003
95-110022-62	57-20-15	95-110031-17	57-10-10	95-110041-605	57-20-10
95-110022-63	57-20-15-017	95-110031-17	32-10-30-035	95-110041-605	57-10-01
95-110022-64	57-20-15	95-110031-19	32-10-30-036	95-110041-606	57-10-01
95-110022-65	57-10-30-003	95-110031-19	57-10-10	95-110041-606	57-20-10
95-110022-66	57-10-30	95-110031-3	57-10-10	95-110041-606	57-20-01
95-110022-67	57-10-30-026	95-110031-5	57-10-10	95-110041-609	57-20-10
95-110022-7	57-10-30-013	95-110031-601	57-10-10-003	95-110041-61	57-20-06-045
95-110022-71	57-20-15-009	95-110031-7	57-10-10	95-110041-62	57-20-06
95-110022-73	57-10-30-019	95-110031-9	57-10-10	95-110041-65	57-20-06
95-110022-8	57-10-30	95-110031-9	57-10-10	95-110041-69	57-20-05
95-110022-9	57-10-30-014	95-110032-1	57-10-10	95-110041-70	57-20-05
95-110023-10	57-10-10	95-110032-11	57-10-10	95-110041-73	57-20-06-018
95-110023-10	32-10-30	95-110032-11	32-10-30	95-110041-73	57-20-10-066
95-110023-11	32-10-30-039	95-110032-13	32-10-30	95-110041-74	57-20-10
95-110023-11	57-10-10	95-110032-13	57-10-10	95-110041-74	57-20-06
95-110023-12	57-10-10	95-110032-3	57-10-10	95-160000-10	57-50-01
95-110023-12	32-10-30	95-110032-5	57-10-10	95-160000-11	57-50-01-033
95-110023-13	32-10-30-038	95-110032-5	32-10-30	95-160000-12	57-50-01
95-110023-13	57-10-10	95-110032-601	57-10-10	95-160000-13	57-50-01-025
95-110023-14	57-10-10	95-110032-603	57-10-10	95-160000-14	57-50-01
95-110023-14	32-10-30	95-110032-7	57-10-10	95-160000-15	57-50-01-034
95-110023-15	32-10-30-037	95-110032-7	32-10-30	95-160000-17	57-50-01-026
95-110023-15	57-10-10	95-110032-9	57-10-10	95-160000-18	57-50-01-027
95-110023-16	57-10-10	95-110033-1	57-10-10	95-160000-19	57-50-01-036
95-110023-16	32-10-30	95-110033-2	57-10-10	95-160000-19	57-30-01-046
95-110023-17	57-10-10	95-110033-3	57-10-10-032	95-160000-20	57-30-01-047
95-110023-18	57-10-10	95-110033-4	57-10-10	95-160000-20	57-50-01
95-110023-19	57-10-10	95-110036	57-20-15	95-160000-21	57-50-01-039
95-110023-20	57-10-10	95-110036-2	57-20-15-035	95-160000-25	57-50-01-028
95-110023-21	57-10-01-013	95-110036-4	57-20-15-036	95-160000-26	57-50-01
95-110023-23	57-10-30-033	95-110037	57-20-15-050	95-160000-27	57-50-01-029
95-110023-24	57-10-30	95-110039-3	57-20-15	95-160000-27	57-30-01
95-110023-25	57-10-10	95-110039-5	57-20-15	95-160000-28	57-30-01
95-110023-26	57-10-10	95-110040	57-20-06-052	95-160000-28	57-50-01
95-110023-3	57-10-10	95-110040-1	57-20-06	95-160000-29	57-50-01-037
95-110023-31	57-10-10	95-110040-1	57-20-05-035	95-160000-29	57-30-01-044
95-110023-32	57-10-10	95-110040-3	57-20-05-036	95-160000-3	57-50-01-008
95-110023-4	57-10-10	95-110040-3	57-20-06	95-160000-30	57-30-01-045
95-110023-5	57-10-10	95-110041-11	57-20-06-012	95-160000-30	57-50-01
95-110023-6	57-10-10	95-110041-11	57-20-10-032	95-160000-31	57-50-01-035
95-110023-601	57-10-10-023	95-110041-12	57-20-10	95-160000-32	57-50-01
95-110023-602	57-10-10	95-110041-12	57-20-06	95-160000-33	57-50-01-030
95-110023-7	57-10-10	95-110041-13	57-20-12-008	95-160000-33	57-30-01-048
95-110023-8	57-10-10	95-110041-14	57-20-12	95-160000-34	57-30-01-049
95-110023-9	57-10-10	95-110041-15	57-20-10-042	95-160000-34	57-50-01
95-110023-9	32-10-30-040	95-110041-15	57-20-06-017	95-160000-35	57-50-01-040
95-110024-1	57-10-10-111	95-110041-16	57-20-06	95-160000-37	57-50-01-031
95-110024-1	57-10-01-017	95-110041-16	57-20-10	95-160000-38	57-50-01
95-110024-2	57-10-01	95-110041-17	57-20-10-043	95-160000-39	57-50-01
95-110024-2	57-10-10	95-110041-17	57-20-06-016	95-160000-39	57-30-01
95-110026-1	57-10-10	95-110041-18	57-20-06	95-160000-4	57-50-01
95-110026-15	57-10-10	95-110041-18	57-20-10	95-160000-40	57-30-01
95-110026-17	57-10-10	95-110041-19	57-20-06-030	95-160000-40	57-50-01
95-110026-21	57-10-10	95-110041-19	57-20-10-033	95-160000-41	57-50-01
95-110026-3	57-10-30-034	95-110041-20	57-20-10	95-160000-41	57-30-01
95-110026-601	57-10-10-008	95-110041-20	57-20-06	95-160000-42	57-30-01
95-110026-603	57-10-10	95-110041-33	57-20-10-030	95-160000-42	57-50-01
95-110026-7	57-10-10	95-110041-34	57-20-10	95-160000-45	57-50-01
95-110026-9	57-10-10	95-110041-35	57-20-10-029	95-160000-47	57-50-01-041
95-110027-3	57-10-30	95-110041-36	57-20-10	95-160000-49	57-50-01
95-110030-1	57-10-10	95-110041-5	57-20-06-011	95-160000-5	57-50-01-023
95-110030-11	57-20-15	95-110041-5	57-20-10-044	95-160000-58	57-50-01
95-110030-3	57-10-10	95-110041-57	57-20-10-063	95-160000-58	57-30-01
95-110030-5	57-20-15-065	95-110041-6	57-20-10	95-160000-6	57-50-01
95-110030-601	57-10-10-007	95-110041-6	57-20-06	95-160000-60	57-50-01
95-110030-7	57-10-10	95-110041-601	57-20-01-002	95-160000-60	57-30-01
95-110031-1	57-10-10	95-110041-601	57-20-05	95-160000-601	57-50-01
95-110031-11	57-10-10	95-110041-601	57-10-01	95-160000-602	57-50-01

PART NUMBER	CHAP/SUB-SECT/UNIT & ITEM	PART NUMBER	CHAP/SUB-SECT/UNIT & ITEM	PART NUMBER	CHAP/SUB-SECT/UNIT & ITEM
95-160000-603	57-50-01	95-170000-192	57-20-22	95-170000-42	57-20-20
95-160000-604	57-50-01	95-170000-192	57-20-21	95-170000-42	57-20-21
95-160000-607	57-50-01	95-170000-195	57-20-21-038	95-170000-42	57-20-22
95-160000-608	57-50-01	95-170000-195	57-20-22-035	95-170000-45	57-20-21-021
95-160000-62	57-50-01	95-170000-196	57-20-22	95-170000-45	57-20-20-021
95-160000-63	57-50-01-038	95-170000-196	57-20-21	95-170000-46	57-20-20
95-160000-65	57-50-01	95-170000-20	57-20-22	95-170000-46	57-20-21
95-160000-69	57-50-01-044	95-170000-20	57-20-21	95-170000-5	57-20-21-002
95-160000-7	57-50-01-032	95-170000-20	57-20-20	95-170000-5	57-20-20-002
95-160000-71	57-50-01	95-170000-21	57-20-20-009	95-170000-5	57-30-01-036
95-160000-72	57-50-01	95-170000-21	57-20-21-009	95-170000-51	57-20-22-030
95-160000-73	57-50-01	95-170000-21	57-20-22-012	95-170000-51	57-20-20-014
95-160000-74	57-50-01	95-170000-22	57-20-22	95-170000-51	57-20-21-014
95-160000-75	57-50-01	95-170000-22	57-20-21	95-170000-52	57-20-21
95-160000-75	57-30-01	95-170000-22	57-20-20	95-170000-52	57-20-20
95-160000-77	57-30-01	95-170000-23	57-20-20-010	95-170000-52	57-20-22
95-160000-77	57-50-01	95-170000-23	57-20-21-010	95-170000-53	57-20-22
95-160000-8	57-50-01	95-170000-23	57-20-22-002	95-170000-53	57-20-20-015
95-160000-81	57-50-01	95-170000-24	57-20-22	95-170000-53	57-20-21-015
95-160000-81	57-30-01	95-170000-24	57-20-21	95-170000-54	57-20-21
95-160000-82	57-30-01	95-170000-24	57-20-20	95-170000-54	57-20-20
95-160000-82	57-50-01	95-170000-25	57-20-20-011	95-170000-54	57-20-22
95-160000-9	57-50-01-024	95-170000-25	57-20-21-011	95-170000-55	57-20-20-022
95-165051-8	57-30-01	95-170000-25	57-20-22-032	95-170000-55	57-20-21-022
95-170000-10	57-30-01-041	95-170000-26	57-20-22	95-170000-55	57-20-22-017
95-170000-10	57-20-20	95-170000-26	57-20-21	95-170000-56	57-20-22
95-170000-10	57-20-21	95-170000-26	57-20-20	95-170000-56	57-20-21
95-170000-100	57-20-22	95-170000-29	57-20-20-012	95-170000-56	57-20-20
95-170000-11	57-30-01-042	95-170000-29	57-20-21-012	95-170000-57	57-20-20-023
95-170000-11	57-20-20-005	95-170000-29	57-20-22-001	95-170000-57	57-20-21-023
95-170000-11	57-20-21-005	95-170000-3	57-20-20-001	95-170000-57	57-20-22-005
95-170000-115	57-20-21	95-170000-3	57-20-21-001	95-170000-6	57-20-21
95-170000-115	57-20-22	95-170000-3	57-30-01-034	95-170000-6	57-20-20
95-170000-116	57-20-22	95-170000-30	57-20-20	95-170000-6	57-30-01-037
95-170000-116	57-20-21	95-170000-30	57-20-21	95-170000-601	57-20-20
95-170000-12	57-20-21	95-170000-30	57-20-22	95-170000-601	57-10-01-020
95-170000-12	57-20-20	95-170000-31	57-20-21-013	95-170000-602	57-10-01
95-170000-12	57-30-01-043	95-170000-31	57-20-20-013	95-170000-602	57-20-20
95-170000-123	57-20-22	95-170000-31	57-20-22-029	95-170000-605	57-20-20
95-170000-123	57-20-21	95-170000-32	57-20-22	95-170000-605	57-20-21
95-170000-124	57-20-21	95-170000-32	57-20-20	95-170000-605	57-20-22
95-170000-124	57-20-22	95-170000-32	57-20-21	95-170000-606	57-20-22
95-170000-127	57-30-01	95-170000-33	57-20-21-016	95-170000-606	57-20-21
95-170000-127	57-20-22	95-170000-33	57-20-20-016	95-170000-606	57-20-20
95-170000-127	57-20-21	95-170000-33	57-20-22-009	95-170000-61	57-10-01-021
95-170000-128	57-20-21	95-170000-34	57-20-22	95-170000-62	57-10-01
95-170000-128	57-20-22	95-170000-34	57-20-20	95-170000-63	57-10-01
95-170000-128	57-30-01	95-170000-34	57-20-21	95-170000-63	57-20-22
95-170000-15	57-20-21-006	95-170000-35	57-20-21-017	95-170000-63	57-20-23-044
95-170000-15	57-20-20-006	95-170000-35	57-20-20-017	95-170000-64	57-20-23
95-170000-15	57-20-22-003	95-170000-35	57-20-22-010	95-170000-64	57-20-22
95-170000-165	57-20-21	95-170000-36	57-20-22	95-170000-64	57-10-01
95-170000-165	57-30-01	95-170000-36	57-20-20	95-170000-65	57-20-20-024
95-170000-165	57-20-22	95-170000-36	57-20-21	95-170000-65	57-20-21-025
95-170000-166	57-20-22	95-170000-37	57-20-21-018	95-170000-66	57-20-21
95-170000-166	57-30-01	95-170000-37	57-20-20-018	95-170000-66	57-20-20
95-170000-166	57-20-21	95-170000-37	57-20-22-011	95-170000-7	57-20-20-003
95-170000-17	57-20-20-007	95-170000-38	57-20-22	95-170000-7	57-30-01-038
95-170000-17	57-20-21-007	95-170000-38	57-20-20	95-170000-77	57-20-22-039
95-170000-173	57-20-22	95-170000-38	57-20-21	95-170000-78	57-20-22
95-170000-174	57-20-22	95-170000-39	57-20-21-019	95-170000-79	57-20-22-040
95-170000-175	57-20-22	95-170000-39	57-20-20-019	95-170000-8	57-30-01-039
95-170000-176	57-20-22	95-170000-39	57-20-22-007	95-170000-8	57-20-20
95-170000-177	57-20-22	95-170000-4	57-20-21	95-170000-80	57-20-22
95-170000-177	57-20-21	95-170000-4	57-20-20	95-170000-81	57-20-22-041
95-170000-178	57-20-21	95-170000-4	57-30-01-035	95-170000-82	57-20-22
95-170000-178	57-20-22	95-170000-40	57-20-20	95-170000-83	57-20-22-034
95-170000-19	57-20-21-008	95-170000-40	57-20-21	95-170000-83	57-30-01
95-170000-19	57-20-20-008	95-170000-40	57-20-22	95-170000-84	57-30-01
95-170000-19	57-20-22-018	95-170000-41	57-20-22-008	95-170000-84	57-20-22
95-170000-191	57-20-21-037	95-170000-41	57-20-21-020	95-170000-85	57-20-22-033
95-170000-191	57-20-22-036	95-170000-41	57-20-20-020	95-170000-85	57-30-01

PART NUMBER	CHAP/SUB-SECT/UNIT & ITEM	PART NUMBER	CHAP/SUB-SECT/UNIT & ITEM	PART NUMBER	CHAP/SUB-SECT/UNIT & ITEM
95-170000-86	57-30-01	95-324006-197	76-16-01-030	95-324006-9	53-25-01-043
95-170000-86	57-20-22	95-324006-199	76-15-01	95-324006-91	76-16-01-036
95-170000-87	57-20-22-042	95-324006-2	53-25-01	95-324006-91	76-15-01-036
95-170000-89	57-20-22-027	95-324006-201	39-10-30	95-324006-93	76-15-01-038
95-170000-9	57-30-01-040	95-324006-201	39-10-30	95-324006-93	76-16-01-038
95-170000-9	57-20-20-004	95-324006-21	53-13-01	95-324006-96	53-25-01
95-170000-9	57-20-21-003	95-324006-227	27-20-15	95-324006-99	53-25-01-050
95-170000-90	57-20-22	95-324006-243	76-15-01-035	95-324007-11	39-10-30
95-170000-99	57-20-22-024	95-324006-243	76-16-01-035	95-324007-7	39-14-01
95-24192	32-40-10-005	95-324006-257	76-16-01-002	95-324007-7	34-10-20
95-24804	32-40-20-004	95-324006-259	76-15-01	95-324008-43	39-10-01-007
95-24805	32-40-20-003	95-324006-259	76-15-01	95-324008-43	39-10-10-021
95-24834	32-40-20-005	95-324006-261	76-16-01	95-324008-43	39-10-20-020
95-25419	32-40-10-007	95-324006-265	76-16-01-005	95-324011-53	39-14-01-009
95-26146	32-40-20-013	95-324006-267	27-10-30-005	95-324012	39-14-01
95-26274	32-40-20	95-324006-269	76-16-01-026	95-324012-1	39-10-30
95-26275	32-40-20	95-324006-269	76-16-01	95-324012-11	39-14-01-028
95-32166	32-40-20-001	95-324006-269	76-15-01-026	95-324012-13	39-14-01-029
95-324005	39-14-10	95-324006-269	76-15-01	95-324012-13	39-14-01
95-324005-33	39-14-01-025	95-324006-27	53-25-01-027	95-324018	39-17-01
95-324005-33	11-30-01-001	95-324006-273	53-25-01	95-324018	34-10-01
95-324005-33	11-30-10-001	95-324006-29	53-25-01	95-324018-107	39-17-01
95-324005-43	39-14-01	95-324006-3	53-25-01-039	95-324018-107	39-17-10
95-324005-43	39-14-10	95-324006-31	53-25-01-028	95-324018-115	39-17-10
95-324006-1	53-25-01-032	95-324006-33	53-25-01	95-324018-115	39-17-01-014
95-324006-10	53-25-01	95-324006-35	53-25-01-077	95-324018-119	39-17-01
95-324006-101	53-25-01-006	95-324006-37	53-25-01-020	95-324018-119	39-17-10
95-324006-103	53-25-01	95-324006-39	53-25-01-019	95-324018-135	34-10-01-006
95-324006-105	27-50-20	95-324006-5	53-25-01-049	95-324018-135	34-10-01
95-324006-111	39-10-30-025	95-324006-51	27-50-20	95-324018-135	36-10-10-006
95-324006-113	39-10-30-028	95-324006-55	27-50-20-004	95-324018-135	34-10-10-042
95-324006-115	39-10-30	95-324006-57	53-25-01-054	95-324018-139	39-17-01-040
95-324006-117	39-10-30	95-324006-58	53-25-01	95-324018-141	39-17-10
95-324006-119	53-25-01-072	95-324006-59	53-25-01-040	95-324018-141	39-17-20-025
95-324006-121	76-15-01-042	95-324006-601	53-25-01	95-324018-141	39-17-30-004
95-324006-125	76-15-01	95-324006-604	53-25-01-016	95-324018-141	39-17-01-038
95-324006-127	53-25-01-015	95-324006-604	27-10-30	95-324018-143	34-10-01
95-324006-128	53-25-01	95-324006-605	53-25-01	95-324018-143	34-10-01
95-324006-129	27-50-20-005	95-324006-606	53-25-01-029	95-324018-145	34-10-01
95-324006-13	53-25-01	95-324006-61	53-25-01-011	95-324018-147	39-17-01-023
95-324006-131	27-50-20-006	95-324006-61	53-13-01	95-324018-149	39-17-01-024
95-324006-133	27-50-20-007	95-324006-62	53-13-01	95-324018-151	34-10-01-025
95-324006-137	76-15-01	95-324006-62	53-25-01	95-324018-151	34-10-10-020
95-324006-139	76-15-01	95-324006-649	53-25-01-001	95-324018-151	36-10-10-001
95-324006-141	76-15-01	95-324006-65	53-25-01	95-324018-151	30-30-01-002
95-324006-143	76-15-01	95-324006-65	27-10-30-021	95-324018-185	34-10-01
95-324006-143	76-16-01-024	95-324006-650	27-10-30	95-324018-185	34-10-01-004B
95-324006-145	76-15-01	95-324006-650	27-20-15	95-324018-191	39-17-01-025
95-324006-147	76-15-01	95-324006-650	27-30-20	95-324018-195	39-17-01-022
95-324006-147	76-16-01-027	95-324006-650	39-10-30	95-324018-201	34-10-01
95-324006-149	76-15-01	95-324006-650	53-25-01	95-324018-205	34-10-01
95-324006-15	53-25-01-026	95-324006-67	53-25-01-037	95-324018-211	34-10-01
95-324006-151	76-15-01	95-324006-67	27-20-01	95-324018-213	34-10-01
95-324006-153	53-25-01-030	95-324006-69	53-25-01-038	95-324018-219	34-10-01
95-324006-155	53-25-01-041	95-324006-7	53-25-01-010	95-324018-221	34-10-01-023
95-324006-159	53-25-01-013	95-324006-71	27-10-30	95-324018-221	36-10-10-005
95-324006-159	11-30-01-037	95-324006-73	27-10-30-007	95-324018-221	34-10-10-023
95-324006-16	53-25-01	95-324006-75	53-25-01-076	95-324018-223	34-10-01-022
95-324006-161	53-25-01-012	95-324006-8	53-25-01	95-324018-3	39-17-01-013
95-324006-161	11-30-01-038	95-324006-81	53-25-01-018	95-324018-35	39-17-01-007
95-324006-163	53-25-01-007	95-324006-83	53-25-01-023	95-324018-35	39-17-10
95-324006-165	53-25-01-074	95-324006-83	76-15-01-040	95-324018-39	39-17-01-003
95-324006-169	53-25-01-014	95-324006-83	76-16-01-040	95-324018-4	39-17-01
95-324006-169	11-30-01-039	95-324006-84	76-16-01	95-324018-47	39-17-01-019
95-324006-171	53-25-01-031	95-324006-84	76-15-01	95-324018-5	39-17-01-011
95-324006-179	53-25-01-021	95-324006-84	53-25-01	95-324018-55	39-17-01
95-324006-181	53-25-01-022	95-324006-85	76-16-01-033	95-324018-6	39-17-01
95-324006-19	53-13-01	95-324006-85	76-15-01-033	95-324018-67	39-17-01-001
95-324006-193	76-15-01	95-324006-87	76-15-01-031	95-324018-67	39-17-10
95-324006-193	76-16-01-028	95-324006-87	76-16-01-031	95-324018-7	39-17-01-012
95-324006-195	76-15-01	95-324006-89	76-15-01-037	95-324018-7	34-10-01
95-324006-197	76-15-01	95-324006-89	76-16-01	95-324018-71	39-17-01

PART NUMBER	CHAP/SUB-SECT/UNIT & ITEM	PART NUMBER	CHAP/SUB-SECT/UNIT & ITEM	PART NUMBER	CHAP/SUB-SECT/UNIT & ITEM
95-324018-71	39-17-10	95-324072-51	39-17-30-015	95-344056-1	35-00-01-001
95-324018-75	39-17-01-039	95-324072-51	39-17-20-016	95-344056-11	35-00-01-005
95-324018-79	39-17-01-008	95-324073	39-17-10	95-344056-15	35-00-01-007
95-324018-8	39-17-01	95-324073-11	39-17-10	95-344056-37	35-00-01-006
95-324018-83	39-17-01	95-324073-12	39-17-10	95-344056-9	35-00-01-004
95-324018-87	39-17-01-020	95-324073-25	39-17-10-008	95-360000-13	39-14-70
95-324018-91	39-17-01-026	95-324073-27	39-17-10-009	95-360000-13	24-00-01
95-324019	53-25-01-002	95-324073-27	36-10-01-055	95-360000-601	33-40-08
95-324019	11-30-01-040	95-324073-37	39-17-10	95-360000-602	33-40-08
95-324020	11-30-01-041	95-324073-9	39-17-10	95-360000-605	53-51-01
95-324020	53-25-01-004	95-324076-11	34-10-10-041	95-360000SA2	39-10-30
95-324030	11-30-01-006	95-324076-11	34-10-01-008	95-360002-649	24-00-01
95-324031	11-30-01-043	95-324076-15	34-10-01-004A	95-360011-635	39-10-30
95-324031	53-25-01-051	95-324076-15	34-10-10-045	95-360011-636	39-10-30
95-324035-13	39-10-20-004	95-324076-17	34-10-01-004	95-360011-643	39-10-30-038
95-324035-13	39-10-10-003	95-324076-21	34-10-01-002	95-360011-644	39-10-30
95-324035-13	39-10-01-020	95-324076-21	34-10-10-047	95-360011-647	57-20-01
95-324035-15	39-10-01-021	95-324076-21	30-30-01	95-360011-648	57-20-01
95-324035-15	39-10-10-004	95-324076-23	34-10-10-044	95-360011-654	57-20-01
95-324035-3	39-14-01-001	95-324076-23	34-10-01-005	95-360012	24-01-01
95-324035-35	39-10-30-002	95-324076-3	34-10-01	95-360012-15	24-40-01-002
95-324035-5	39-10-30-015	95-324076-7	34-10-01	95-360012-17	24-40-01-009
95-324035-53	39-14-01	95-324078-27	39-17-20-008	95-360012-17	57-10-01-030
95-324035-55	39-14-01-008	95-324078-29	39-17-20-006	95-360012-19	57-10-01-031
95-324035-59	39-14-01-010	95-324078-31	39-17-20-010	95-360012-19	24-40-01-010
95-324035-61	39-14-01-012	95-324078-31	39-17-30-033	95-360012-21	24-40-01-011
95-324035-65	39-14-01-015	95-324078-33	39-17-20-009	95-360012-21	57-10-01-032
95-324035-65	34-10-20	95-324078-35	39-17-20-003	95-360012-23	57-10-01
95-324038	39-10-01	95-324078-35	39-17-30-038	95-360012-23	24-40-01
95-324038-23	39-10-30-042	95-324078-37	39-17-30-037	95-360012-25	24-40-01-001
95-324038-29	39-10-30	95-324078-37	39-17-20-004	95-360012-607	24-40-01
95-324038-29	39-10-20-028	95-324078-39	39-17-20	95-360012-608	24-40-01
95-324038-29	39-10-01-013	95-324078-39	39-17-30	95-360012-611	24-40-01
95-324038-29	39-10-10-012	95-324078-41	39-17-20	95-360012-613	24-40-01
95-324038-31	39-10-30-048	95-324078-43	39-17-20	95-361014	32-10-10
95-324038-37	39-10-30-045	95-324078-43	39-17-30	95-361015-601	32-10-20
95-324038-37	39-10-30-052	95-324078-45	39-17-20	95-361018	24-30-20
95-324038-37	39-10-20-024	95-32412	32-40-20	95-361018	24-00-01
95-324038-37	39-10-10-007	95-32412	32-10-10-062	95-364011	24-00-01-028
95-324038-37	39-10-01-017	95-32669	32-40-10	95-364011	32-30-20-048
95-324038-39	39-10-10-008	95-32669	32-20-10-003	95-364021	11-30-01-044
95-324038-39	39-10-01	95-32671	32-40-10	95-364025-1	39-14-70
95-324038-39	39-10-20-025	95-32671	32-40-10-008	95-364025-601	39-14-70
95-324038-39	39-10-30-051	95-32672	32-40-10	95-364026	11-30-01-093
95-324038-39	39-10-30-044	95-32679	32-40-20	95-364027-17	33-46-01
95-324038-59	39-10-30	95-32679	32-10-10	95-364027-21	33-44-01-004
95-324038-61	39-10-30-043	95-32679	32-10-20-051	95-364027-21	33-46-01
95-324038-63	39-10-30	95-32684	32-40-20	95-364027-31	33-46-01
95-324038-63	39-10-01-014	95-32926	32-40-10	95-364027-608	33-46-01
95-324038-65	39-10-30-050	95-32926	32-20-10	95-364029-3	39-14-70-001
95-324040	11-30-01-010	95-340010-11	11-30-01-019	95-364029-3	39-14-80-001
95-324043-1	39-17-01-045	95-340010-15	11-30-01-018	95-364029-3	24-00-01-002
95-324043-3	39-17-01-041	95-340010-17	11-30-01-017	95-364029-601	39-14-70-002
95-324045-1	39-10-30-037	95-340010-19	11-30-01-016	95-364029-602	39-14-70
95-324046	11-30-01-089	95-340010-21	11-30-01-015	95-364029-603	39-14-70
95-324046	53-25-01	95-340010-23	11-30-01-014	95-364029-604	39-14-70
95-324051	11-30-01-070	95-340011-21	11-30-01-055	95-364029-621	39-14-70
95-324053	11-30-01-011	95-340013-39	11-30-01-072	95-364029-622	39-14-70
95-324054-1	39-10-30-062	95-340013-41	11-30-01-073	95-364029-623	39-14-70
95-324059	11-30-01-061	95-340013-55	11-30-01-074	95-364029-624	39-14-70
95-324060	11-30-01-059	95-340013-57	11-30-01-075	95-364030	39-14-80-008
95-324060	39-14-01-026	95-340013-59	11-30-01-076	95-364030	24-00-01-003
95-324061	39-14-01-024	95-340013-65	11-30-01-077	95-364030	11-30-01-062
95-324061	11-30-01	95-340013-67	11-30-01-078	95-364031	11-30-01-094
95-324062	11-30-01-045	95-340013-73	11-30-01-079	95-364032	33-40-01
95-324062	39-14-70	95-340013-75	11-30-01-080	95-364032-1	33-40-01-002
95-324063	39-14-01-027	95-340013-77	11-30-01-081	95-364032-1	32-20-10
95-324063	39-14-10	95-340013-81	11-30-01-082	95-380005-9	21-22-20
95-324063	39-14-20-012	95-340013-87	11-30-01-083	95-380005-9	21-22-50-001
95-324063	11-30-01-060	95-344032	11-30-01-009	95-380005-9	53-52-03-017
95-324065	11-30-01-051	95-344035	11-30-01-012	95-380007	21-22-01-003
95-324072-51	39-17-10-025	95-344042	11-30-01-084	95-380010	52-10-01

PART NUMBER	CHAP/SUB-SECT/UNIT & ITEM	PART NUMBER	CHAP/SUB-SECT/UNIT & ITEM	PART NUMBER	CHAP/SUB-SECT/UNIT & ITEM
95-380010	52-10-02-038	95-410005-49	53-11-01-066	95-410006-49	53-30-01-008
95-380012-1	28-10-01	95-410005-5	53-11-01-019	95-410006-5	24-30-20-005
95-380012-3	28-10-01	95-410005-5	53-10-01-013	95-410006-5	53-10-01-050
95-380013-1	28-10-01	95-410005-53	53-30-01-002	95-410006-5	53-11-01-044
95-380013-3	28-10-01	95-410005-53	53-32-01-003	95-410006-51	53-10-01-058
95-380013-5	28-10-01	95-410005-55	53-32-01-005	95-410006-57	53-10-01-060
95-380013-7	28-10-01	95-410005-55	53-30-01-003	95-410006-57	53-11-01-072
95-380015-3	28-10-01	95-410005-57	53-30-01-005	95-410006-59	53-10-01-059
95-380015-4	28-10-01	95-410005-57	53-32-01-007	95-410006-601	53-10-01
95-380017	39-10-01	95-410005-59	53-32-01-008	95-410006-601	53-11-01
95-380017-1	39-10-01	95-410005-59	53-30-01-007	95-410006-603	53-11-01-081
95-380017-1	39-10-10-017	95-410005-63	53-10-01	95-410006-603	53-10-01-056
95-380018	39-10-10-018	95-410005-64	53-10-01	95-410006-61	53-10-01
95-380018	39-10-01-005	95-410005-65	53-10-01-034	95-410006-61	53-11-01
95-380018	39-14-01-016	95-410005-66	53-10-01	95-410006-610	53-10-01-055
95-380026	61-24-01-003	95-410005-67	53-10-01-035	95-410006-63	53-10-01-046
95-400005-612	53-10-01	95-410005-68	53-10-01	95-410006-65	53-10-01-044
95-400005-622	53-11-01-055	95-410005-69	53-10-01-036	95-410006-67	53-10-01-049
95-400006-632	53-14-01	95-410005-71	53-10-01-037	95-410006-67	53-11-01
95-400006-633	53-14-01	95-410005-72	53-10-01	95-410006-7	53-11-01-046
95-400006-634	53-14-01	95-410005-73	53-10-01-038	95-410006-7	53-10-01-051
95-400006-636	53-16-50	95-410005-73	53-11-01-025	95-410006-71 C	25-28-10
95-400006-638	53-14-01	95-410005-75	53-10-01-039	95-410006-73	25-22-01-143
95-400006-681	53-16-50	95-410005-76	53-10-01	95-410006-73 C	25-28-10
95-410005-10	53-11-01	95-410005-77	53-10-01-040	95-410006-73 C	25-28-10-010
95-410005-10	53-10-01	95-410005-77	53-11-01-026	95-410006-79	53-10-01
95-410005-11	53-10-01-015	95-410005-78	53-11-01	95-410006-80	53-10-01-041
95-410005-11	53-11-01-021	95-410005-78	53-10-01	95-410006-81	53-10-01-054
95-410005-135	53-11-01-028	95-410005-85	53-10-01-042	95-410006-81	53-11-01-048
95-410005-135	53-10-01	95-410005-9	53-10-01-014	95-410006-81	24-30-20-008
95-410005-136	53-10-01-022	95-410005-9	53-11-01-024	95-410006-83	53-11-01
95-410005-136	53-11-01	95-410006-1	53-11-01	95-410006-87	53-11-01-039
95-410005-143	53-11-01-065	95-410006-109	53-32-01-009	95-410006-87	53-10-01
95-410005-143	53-10-01-031	95-410006-111	53-11-01	95-410006-89	53-10-01
95-410005-17	53-10-01-016	95-410006-113	53-11-01	95-410006-89	53-11-01-038
95-410005-17	53-11-01-020	95-410006-113	52-35-02-014	95-410006-9	53-11-01-047
95-410005-187	53-32-01-004	95-410006-115	52-35-02-011	95-410006-9	53-10-01-052
95-410005-187	53-30-01-004	95-410006-115	53-11-01	95-410006-9	24-30-20-007
95-410005-19	53-11-01-022	95-410006-117	53-11-01	95-410006-91	53-10-01
95-410005-19	53-10-01-017	95-410006-117	52-35-02-013	95-410006-91	53-11-01-041
95-410005-191	53-10-01-066	95-410006-117	52-35-01	95-410006-93	53-11-01-040
95-410005-191	53-11-01-073	95-410006-117	53-10-01	95-410006-93	53-10-01
95-410005-201	53-11-01-067	95-410006-119	52-35-02	95-410006-95	53-11-01-036
95-410005-201	53-10-01-064	95-410006-121	52-35-02	95-410006-97	53-11-01
95-410005-203	53-10-01-062	95-410006-123	52-35-02	95-410006-97	53-10-01
95-410005-21	53-10-01-018	95-410006-125	52-35-02	95-410011-1	53-50-01
95-410005-23	53-10-01-019	95-410006-129	53-11-01	95-410011-195	53-16-51
95-410005-25	53-10-01-020	95-410006-139	53-11-01	95-410011-196	53-16-51
95-410005-27	53-10-01-021	95-410006-139	52-35-02	95-410011-3	53-50-01-001
95-410005-3	53-10-01	95-410006-141	53-11-01	95-410011-5	53-50-01-002
95-410005-3	53-11-01-017	95-410006-143	53-11-01	95-410024-1	53-11-01
95-410005-31	53-11-01	95-410006-143	52-35-02	95-410029	53-10-01
95-410005-31	53-11-01	95-410006-145	53-10-01	95-410029	52-35-01
95-410005-31	53-10-01-023	95-410006-145	25-28-10	95-410029-19	53-30-01
95-410005-33	53-10-01-024	95-410006-15	53-10-01	95-410029-25	52-35-01-005
95-410005-35	53-10-01-025	95-410006-19	53-11-01	95-410029-27	52-35-01
95-410005-35	53-11-01-037	95-410006-19	24-30-20	95-410029-29	52-35-01
95-410005-37	53-11-01-059	95-410006-3	53-10-01	95-410029-31	52-35-01
95-410005-37	53-10-01-026	95-410006-35	53-10-01-043	95-410029-37	52-35-01
95-410005-39	53-10-01-027	95-410006-37	53-10-01-045	95-410029-47	53-30-01-009
95-410005-39	53-11-01-060	95-410006-37	53-11-01-080	95-410029-47	53-32-01
95-410005-4	53-11-01	95-410006-39	53-11-01	95-410029-51	52-35-01
95-410005-4	53-10-01-012	95-410006-39	53-10-01	95-410029-51	52-35-02
95-410005-41	53-10-01-028	95-410006-41	53-10-01	95-410029-55	52-35-02
95-410005-41	53-11-01-061	95-410006-41	53-11-01	95-410029-601	52-35-01
95-410005-43	53-11-01-062	95-410006-43	53-11-01	95-410029-602	52-35-01
95-410005-43	53-10-01-029	95-410006-43	53-10-01	95-410029-611	52-35-01
95-410005-45	53-10-01-032	95-410006-45	53-32-01	95-410029-612	52-35-01
95-410005-45	53-11-01-063	95-410006-45	53-30-01-001	95-410029-612	53-10-01
95-410005-47	53-11-01-064	95-410006-47	53-30-01-006	95-410029-612	53-11-01
95-410005-47	53-10-01-033	95-410006-47	53-32-01	95-410029-613	53-11-01
95-410005-49	53-10-01-030	95-410006-49	53-32-01	95-410029-613	53-10-01

PART NUMBER	CHAP/SUB-SECT/UNIT & ITEM	PART NUMBER	CHAP/SUB-SECT/UNIT & ITEM	PART NUMBER	CHAP/SUB-SECT/UNIT & ITEM
95-410029-616	52-35-02	95-410030-47	53-12-01-005	95-410036	52-35-01-012
95-410029-63	53-32-01-006	95-410030-48	53-12-01	95-410040-13	53-50-20
95-410029-67	52-35-02-010	95-410030-5	53-13-01-001	95-410040-19	53-50-10-009
95-410029-69	52-35-02	95-410030-51	53-12-01-007	95-410040-21	53-50-10-007
95-410029-71	52-35-02	95-410030-57	53-12-01-015	95-410040-27	53-50-10-012
95-410029-81	52-35-02-009	95-410030-59	53-12-01-012	95-410040-27	53-50-20-006
95-410030-100	53-13-01	95-410030-60	53-12-01	95-410040-29	53-50-20-011
95-410030-101	53-13-01-020	95-410030-601	53-12-01	95-410040-29	53-50-10-013
95-410030-105	53-12-01	95-410030-602	53-12-01	95-410040-29	53-10-01
95-410030-107	53-12-01-016	95-410030-603	53-13-01-017	95-410040-29	53-11-01-013
95-410030-11	53-13-01	95-410030-604	53-13-01	95-410040-30	53-50-10-003
95-410030-11	53-16-50	95-410030-604	53-10-01-002	95-410040-30	53-50-20-004
95-410030-115	53-12-01	95-410030-607	53-10-01-048	95-410040-33	53-50-10-004
95-410030-13	53-13-01-004	95-410030-61	53-12-01-008	95-410040-34	53-50-10
95-410030-131	53-13-01	95-410030-611	53-12-01	95-410040-35	53-50-10
95-410030-131	53-11-01	95-410030-611	53-10-01-001	95-410040-36	53-50-10
95-410030-132	53-13-01-002	95-410030-612	53-10-01	95-410040-37	53-50-10
95-410030-133	53-13-01	95-410030-612	53-12-01	95-410040-38	53-50-10
95-410030-134	53-13-01-003	95-410030-620	53-13-01	95-410040-39	53-50-10
95-410030-135	53-13-01	95-410030-620	53-16-50-031	95-410040-39	53-50-10
95-410030-137	53-13-01	95-410030-621	53-13-01	95-410040-41	53-50-10
95-410030-139	53-11-01-070	95-410030-622	53-13-01	95-410040-41	53-50-10
95-410030-140	53-11-01	95-410030-622	53-10-01	95-41589	32-40-20-012
95-410030-142	30-10-01	95-410030-624	53-11-01	95-41898	32-40-10
95-410030-149	53-11-01-010	95-410030-626	53-13-01	95-41899	32-40-10
95-410030-149	53-10-01	95-410030-67	53-13-01	95-420005-13	53-17-01-002
95-410030-15	53-13-01-018	95-410030-69	53-13-01	95-420005-15	53-17-01-017
95-410030-153	53-11-01-009	95-410030-7	53-13-01-006	95-420005-16	53-17-01
95-410030-153	53-10-01	95-410030-71	53-13-01	95-420005-17	53-17-01-018
95-410030-154	53-10-01	95-410030-73	53-13-01	95-420005-18	53-17-01
95-410030-154	53-11-01	95-410030-75	53-10-01-010	95-420005-19	53-17-01-019
95-410030-165	53-10-01	95-410030-77	53-10-01-009	95-420005-29	53-17-01-020
95-410030-165	53-11-01-004	95-410030-77	53-11-01-011	95-420005-7	53-17-01-005
95-410030-167	53-13-01-008	95-410030-79	53-13-01	95-420006-11	53-17-50-002
95-410030-169	53-11-01-007	95-410030-87	53-13-01	95-420006-13	53-17-50-001
95-410030-169	53-10-01	95-410030-9	53-11-01-053	95-420006-15	53-17-50
95-410030-171	53-10-01	95-410030-91	53-13-01-019	95-420006-17	53-17-50
95-410030-171	53-11-01-005	95-410030-93	53-12-01-001	95-420006-19	53-17-50-004
95-410030-172	53-11-01	95-410030-93	32-20-30-009	95-420006-21	53-17-50-003
95-410030-172	53-10-01	95-410030-95	32-50-01-051	95-420006-27	53-17-50-016
95-410030-173	53-10-01-006	95-410030-95	53-11-01	95-420006-29	53-17-50-019
95-410030-173	53-11-01-006	95-410030-95	53-10-01	95-420006-31	53-17-50-007
95-410030-179	53-11-01-071	95-410030-97	53-13-01-028	95-420006-33	53-17-50-018
95-410030-185	53-13-01-007	95-410030-98	53-13-01	95-420006-33	27-10-01-038
95-410030-187	53-13-01-009	95-410030-99	53-13-01-029	95-420006-34	27-10-01
95-410030-189	53-13-01	95-410031-17	32-20-30-005	95-420006-34	53-17-50
95-410030-19	53-11-01-012	95-410031-19	32-20-30	95-420006-35	53-17-50-022
95-410030-19	53-10-01-047	95-410031-20	32-20-30	95-420006-36	53-17-50
95-410030-191	53-13-01	95-410031-29	25-22-01-142	95-420006-37	53-17-50-023
95-410030-193	53-13-01	95-410031-29 C	25-28-10-009	95-420006-38	53-17-50
95-410030-197	53-11-01-003	95-410031-601	32-20-30-003	95-420006-5	53-17-50-005
95-410030-197	53-10-01-003	95-410031-602	32-20-30-004	95-420011-107	53-30-01-023
95-410030-201	53-11-01	95-410032-1	56-10-01	95-420011-107	53-32-01-042
95-410030-202	53-11-01	95-410032-3	56-10-01	95-420011-109	53-32-01
95-410030-205	53-13-01	95-410033-1	25-50-01	95-420011-109	53-30-01-024
95-410030-21	53-11-01-016	95-410033-2	25-50-01	95-420011-109	53-10-01-073
95-410030-21	53-10-01-011	95-410033-27	25-50-01	95-420011-113	53-30-01-022
95-410030-27	53-11-01-018	95-410033-28	25-50-01-009	95-420011-13	53-15-01
95-410030-29	53-10-01-004	95-410033-3	25-50-01-011	95-420011-137	53-14-01-003
95-410030-3	53-13-01	95-410033-33	25-50-01	95-420011-138	53-14-01
95-410030-31	53-10-01	95-410033-34	25-50-01	95-420011-145	53-14-50
95-410030-32	53-10-01-005	95-410033-47	25-50-01	95-420011-151	53-15-01-049
95-410030-33	53-10-01-007	95-410033-48	25-50-01	95-420011-155	32-30-01-052
95-410030-35	53-10-01-008	95-410033-5	25-50-01-012	95-420011-175	53-14-01
95-410030-35	53-11-01	95-410033-5	53-11-01-049	95-420011-177	53-14-01
95-410030-36	53-11-01-008	95-410033-7	25-50-01-010	95-420011-185	53-15-01-057
95-410030-36	53-10-01	95-410035-1W-C	11-20-01	95-420011-187	53-15-01
95-410030-41	53-12-01-002	95-410035B-C	11-20-01-021	95-420011-187	53-15-01-019
95-410030-42	53-12-01	95-410035B-C	11-20-10-009	95-420011-191	53-15-01-067
95-410030-43	53-12-01-011	95-410035W-C	11-20-10	95-420011-192	53-15-01
95-410030-45	53-12-01-004	95-410036	11-20-01-036	95-420011-194	53-15-01
95-410030-45	32-20-30-008	95-410036	11-30-01-020	95-420011-195	53-16-50

PART NUMBER	CHAP/SUB-SECT/UNIT & ITEM
95-420011-196	53-16-50
95-420011-27	53-15-01-010
95-420011-3	53-15-01-052
95-420011-39	53-16-50-001
95-420011-41	53-16-50-017
95-420011-45	53-16-50-033
95-420011-45	53-30-01-011
95-420011-51	53-14-01-006
95-420011-55	53-30-01-026
95-420011-57	53-30-01-025
95-420011-604	53-15-01
95-420011-605	53-15-01
95-420011-608	53-16-50
95-420011-609	53-16-50
95-420011-61	53-10-01-071
95-420011-61	27-10-01-040
95-420011-61	27-20-01
95-420011-610	53-16-50
95-420011-615	53-15-01
95-420011-616	53-15-01
95-420011-65	53-14-01-001
95-420011-65	53-30-01
95-420011-69	53-16-51-021
95-420011-69	53-16-50-014
95-420011-7	53-15-01-017
95-420011-71	53-15-01-018
95-420011-75	53-15-01-013
95-420011-79	53-14-01-002
95-420011-79	53-30-01
95-420011-87	53-15-01-066
95-420011-9	53-15-01
95-420011-95	53-14-50-006
95-420011-95	53-14-01-024
95-420012-15	52-10-02
95-420012-15	52-10-01
95-420012-17	52-10-01
95-420012-3	52-10-01-070
95-420012-3	52-10-02-078
95-420012-605	52-10-01
95-420012-606	52-10-01
95-420012-608	52-10-01
95-420012-630	52-10-02
95-420012-632	52-10-02
95-420012-638	52-10-02
95-420012-640	52-10-02
95-420012-642	52-10-02
95-420013-1	53-20-01-006
95-420013-13	53-20-01-010
95-420013-17	53-20-01-003
95-420013-21	53-20-01-005
95-420013-25	53-20-01
95-420013-27	53-20-01-002
95-420013-27	53-20-01-004
95-420013-29	53-20-01
95-420013-41	53-20-01
95-420013-43	53-20-01-007
95-420013-5	53-20-01-001
95-420013-619	53-20-01
95-420013-623	53-20-01
95-420013-634	53-20-01
95-420013-635	53-20-01
95-420013-642	53-20-01
95-420013-643	53-20-01
95-420013-644	53-20-01
95-420013-647	53-20-01
95-420013-650	53-20-01
95-420013-651	53-20-01
95-420013-652	53-20-01
95-420013-653	53-20-01
95-420013-661	53-20-01
95-420013-662	53-20-01
95-420013-663	53-20-01
95-420013-664	53-20-01
95-420013-666	53-20-01
95-420013-669	53-20-01
95-420015	53-30-01-014
95-420015-1	53-15-01-037
95-420015-101	53-16-51
95-420015-101	53-16-50-075
95-420015-101	53-30-01-019
95-420015-101	53-32-01-015
95-420015-11	53-15-01-035
95-420015-115	53-16-50-074
95-420015-115	53-30-01
95-420015-116	53-30-01
95-420015-116	53-16-50
95-420015-117	53-16-50-063
95-420015-119	53-16-50-061
95-420015-12	53-15-01
95-420015-121	53-16-50
95-420015-121	53-16-51-024
95-420015-122	53-16-51-024A
95-420015-122	53-16-50-057
95-420015-123	53-16-51-056
95-420015-123	53-16-50
95-420015-124	53-16-50-056
95-420015-124	53-16-51-057
95-420015-126	53-16-50-064
95-420015-127	53-16-50-062
95-420015-129	53-18-01-124
95-420015-13	53-15-01-033
95-420015-14	53-15-01
95-420015-143	53-14-01
95-420015-143	53-14-50
95-420015-147	53-20-01-017
95-420015-149	53-20-01-016
95-420015-15	53-15-01-009
95-420015-151	53-15-01-028
95-420015-153	52-30-01-009
95-420015-154	53-15-01
95-420015-155	53-15-01
95-420015-159	53-30-01
95-420015-161	53-16-51-068
95-420015-161	53-16-50-081
95-420015-163	53-16-50-080
95-420015-163	53-16-51-067
95-420015-165	53-16-51-066
95-420015-165	53-16-50-079
95-420015-167	53-16-50-078
95-420015-167	53-16-50-069
95-420015-167	53-16-51-065
95-420015-171	53-14-01-012
95-420015-173	53-16-50
95-420015-173	53-30-01
95-420015-174	53-30-01
95-420015-174	53-16-50
95-420015-178	53-16-50
95-420015-178	53-16-51-055
95-420015-178	53-32-01-023
95-420015-179	53-30-01-010
95-420015-19	53-15-01-030
95-420015-2	53-15-01
95-420015-205	53-16-51
95-420015-21	53-14-01-022
95-420015-25	53-15-01-024
95-420015-27	53-15-01-023
95-420015-27	53-14-50
95-420015-29	53-15-01-026
95-420015-3	53-15-01-039
95-420015-31	53-15-01
95-420015-32	53-15-01
95-420015-33	53-15-01-025
95-420015-35	53-14-50
95-420015-35	53-14-01
95-420015-4	53-15-01
95-420015-41	53-30-01-028
95-420015-43	53-15-01-020
95-420015-45	53-15-01
95-420015-47	53-15-01
95-420015-48	53-15-01
95-420015-49	53-15-01
95-420015-5	53-15-01-038
95-420015-5	53-15-01-036
95-420015-50	53-15-01
95-420015-51	53-15-01
95-420015-52	53-15-01
95-420015-53	53-30-01-027
95-420015-55	53-30-01-029
95-420015-55	53-32-01-030
95-420015-57	53-30-01-032
95-420015-57	53-15-01-029
95-420015-6	53-15-01
95-420015-6	53-15-01
95-420015-601	53-15-01
95-420015-609	53-16-51
95-420015-609	53-16-50
95-420015-61	53-16-50-077
95-420015-63	53-16-50-060
95-420015-69	53-14-50-007
95-420015-69	53-14-01-025
95-420015-7	53-15-01-040
95-420015-7	53-15-01-034
95-420015-77	53-15-01-027
95-420015-79	53-16-50
95-420015-8	53-15-01
95-420015-8	53-15-01
95-420015-81	53-16-50-059
95-420015-89	53-16-50
95-420015-90	53-16-50
95-420015-93	25-23-01-005
95-420015-93	56-20-01-011
95-420015-94	56-20-01
95-420015-94	25-23-01
95-420015-97	53-16-50-013
95-420015-99	53-16-50-002
95-420015-99	53-16-51-020
95-420016-10	53-17-50
95-420016-17	53-17-50-013
95-420016-18	53-17-50
95-420016-19	53-17-50-012
95-420016-20	53-17-50
95-420016-21	53-17-50-011
95-420016-22	53-17-50
95-420016-23	53-17-50-026
95-420016-25	53-17-50-014
95-420016-26	53-17-50
95-420016-31	53-17-50-024
95-420016-35	53-17-50
95-420016-36	53-17-50-010
95-420016-39	53-17-50
95-420016-45	53-17-50
95-420016-45	21-20-10-017
95-420016-601	53-17-50
95-420016-601	53-14-50
95-420016-601	53-14-01
95-420016-9	53-17-50-009
95-420017-1	53-17-01-003
95-420017-11	53-17-01-009
95-420017-13	53-17-01-008
95-420017-15	53-17-01
95-420017-15	53-14-50
95-420017-17	53-17-01
95-420017-17	25-13-20
95-420017-19	25-13-20-071
95-420017-19	53-17-01
95-420017-19	53-17-01

PART NUMBER	CHAP/SUB-SECT/UNIT & ITEM
95-420017-19	53-17-02-029
95-420017-2	53-17-01-004
95-420017-21	53-17-01-023
95-420017-23	53-17-01
95-420017-23	53-14-50
95-420017-5	53-17-01-026
95-420017-5	25-13-20-070
95-420017-601	53-17-01
95-420017-601	53-14-01
95-420017-7	53-17-01-032
95-420017-9	53-17-01-033
95-430005-13	53-18-01-119
95-430005-14	53-18-01
95-430005-17	53-18-01-116
95-430005-18	53-18-01
95-430005-19	53-18-01-113
95-430005-20	53-18-01
95-430005-23	53-18-01-108
95-430005-24	53-18-01
95-430005-41	53-18-01-062
95-430005-45	53-18-01
95-430005-5	53-18-01
95-430005-6	53-18-01
95-430005-7	53-18-01
95-430005-75	53-18-01-115
95-430005-77	53-18-01-117
95-430005-79	53-18-01
95-430005-8	53-18-01
95-440000-143	53-18-01
95-440000-145	53-18-01-131
95-440005-7	53-30-01-043
95-440005-7	53-32-01
95-440005-73	53-18-01-112
95-440005-74	53-18-01
95-440005-9	53-32-01-039
95-440005-9	53-30-01-044
95-440006-105	53-18-01-019
95-440006-105	52-60-01
95-440006-11	53-16-50-086
95-440006-111	53-18-01-026
95-440006-113	53-18-01
95-440006-125	53-18-01-114
95-440006-126	53-18-01
95-440006-129	53-30-01-046
95-440006-129	53-32-01-040
95-440006-131	53-32-01
95-440006-131	53-30-01-045
95-440006-133	53-18-01-110
95-440006-135	53-18-01-010
95-440006-145	53-18-01-067
95-440006-147	53-18-01
95-440006-15	53-18-01
95-440006-159	53-30-01
95-440006-160	53-30-01
95-440006-161	53-18-01-123
95-440006-167	53-18-01
95-440006-169	53-18-01-005
95-440006-17	53-18-01
95-440006-175	53-18-01
95-440006-176	53-18-01
95-440006-189	53-18-01-036
95-440006-19	53-18-01
95-440006-19	25-22-03-047
95-440006-19	25-22-02-009
95-440006-195	53-18-01-130
95-440006-196	53-18-01
95-440006-197	53-18-01-126
95-440006-198	53-18-01
95-440006-201	53-30-01
95-440006-202	53-30-01
95-440006-203	53-18-01-023
95-440006-204	53-18-01
95-440006-205	53-18-01-028
95-440006-206	53-18-01
95-440006-207	53-18-01-029
95-440006-209	53-16-50-067
95-440006-209	53-16-51
95-440006-21	53-18-01-032
95-440006-211	53-16-51
95-440006-211	53-16-50-068
95-440006-215	53-30-01-034
95-440006-215	53-32-01-031
95-440006-221	53-16-51
95-440006-223	53-18-01-027
95-440006-23	53-18-01
95-440006-231	53-18-01-035
95-440006-233	53-18-01
95-440006-235	53-18-01
95-440006-243	53-32-01
95-440006-243	53-30-01-047
95-440006-249	53-20-01-022
95-440006-25	53-18-01-013
95-440006-257	53-18-01
95-440006-259	53-18-01-034
95-440006-26	53-18-01
95-440006-29	53-18-01-015
95-440006-3	53-18-01-024
95-440006-30	53-18-01
95-440006-33	53-20-01-021
95-440006-33	53-32-01-044
95-440006-35	53-18-01-012
95-440006-36	53-18-01
95-440006-37	53-18-01-014
95-440006-38	53-18-01
95-440006-4	53-18-01
95-440006-41	53-18-01-006
95-440006-43	53-18-01-007
95-440006-47	53-18-01-008
95-440006-48	53-18-01
95-440006-49	53-18-01-009
95-440006-50	53-18-01
95-440006-53	53-18-01
95-440006-54	53-18-01
95-440006-55	53-18-01-121
95-440006-56	53-18-01
95-440006-57	53-18-01-118
95-440006-58	53-18-01
95-440006-614	53-18-01
95-440006-7	53-18-01-022
95-440006-89	53-18-01-016
95-440006-9	53-18-01
95-440006-9	53-16-50-085
95-440006-91	53-18-01-017
95-440006-99	53-18-01-042
95-440013-101	53-18-01
95-440013-103	53-18-01-079
95-440013-103	27-30-01
95-440013-33	53-18-01-080
95-440013-35	53-18-01-081
95-440013-37	53-18-01
95-440013-45	53-18-01
95-440013-47	53-18-01-076
95-440013-53	53-18-01-078
95-440013-55	53-18-01-074
95-440013-57	53-18-01
95-440013-59	53-18-01
95-440013-61	53-18-01-082
95-440013-65	53-18-01
95-440013-65	53-18-01
95-440013-67	53-18-01
95-440013-69	53-18-01
95-440013-71	53-18-01-083
95-440013-73	53-18-01-087
95-440013-77	53-18-01-077
95-440013-78	53-18-01
95-440013-81	53-18-01-084
95-440013-85	53-18-01-075
95-440013-87	53-18-01
95-440013-89	53-18-01
95-440013-91	53-18-01
95-440013-93	53-18-01
95-440013-95	53-18-01
95-440013-97	53-18-01
95-440013-98	53-18-01
95-440013-99	53-18-01
95-440014-45	52-60-01
95-440014-47	52-60-01
95-440014-53	52-60-01-001
95-440014-57	52-60-01
95-520012	27-50-01
95-5204	32-40-21-012
95-5204	32-40-20-009
95-521000-1	27-10-01
95-521000-11	27-10-01
95-521000-2	27-10-01
95-521000-27	27-10-01
95-521000-27	57-20-15-059
95-521000-31	27-10-01
95-521000-33	27-10-01
95-521000-33	27-10-10
95-521000-35	27-10-10-017
95-521000-35	27-10-01-078
95-521000-37	27-10-01
95-521000-41	27-10-01
95-521000-45	27-10-01-082
95-521000-46	27-10-01
95-521000-603	27-10-01-061
95-521000-603	27-10-10
95-521000-605	27-10-01
95-521000-606	27-10-01
95-521000-9	27-10-01
95-524000-1	27-20-01
95-524000-1	27-30-01
95-524000-1	53-15-01-065
95-524000-1	53-17-50-021
95-524000-11	27-10-01
95-524000-19	27-30-01-043
95-524000-21	27-10-01-018
95-524000-25	27-30-01
95-524000-27	27-30-01-039
95-524000-27	27-30-30
95-524000-29	27-10-01-041
95-524000-29	53-15-01-061
95-524000-3	53-15-01-064
95-524000-3	27-10-01-043
95-524000-31	27-10-01-012
95-524000-33	27-10-01-013
95-524000-35	27-10-01-028
95-524000-37	27-10-01-025
95-524000-39	53-15-01-062
95-524000-41	53-15-01-063
95-524000-5	53-15-01-056
95-524000-5	27-10-01-042
95-524000-5	53-17-01-014
95-524000-55	27-20-01
95-524000-55	53-15-01-055
95-524000-7	27-10-01
95-524000-9	27-10-01-027
95-524011	27-30-01
95-524011-1	27-30-01-005
95-524011-601	27-30-01
95-524017-8	27-30-01
95-524017-8	27-30-01-019A
95-524018-11	27-20-20-027
95-524018-13	27-20-20-023
95-524018-17	27-20-20

PART NUMBER	CHAP/SUB-SECT/UNIT & ITEM	PART NUMBER	CHAP/SUB-SECT/UNIT & ITEM	PART NUMBER	CHAP/SUB-SECT/UNIT & ITEM
95-524018-19	27-20-20-018	95-530012-3	39-10-30-059	95-534042-3	25-23-01-058
95-524018-23	27-20-20	95-530012-5	39-10-30-060	95-550000	21-40-20
95-524018-25	27-20-20	95-530012-601	39-10-30-058	95-550000	21-20-01
95-524018-27	27-20-20-031	95-530014-5	25-16-10-007	95-550000-13	21-40-01-067
95-524018-29	27-20-20	95-530014-5	25-22-01-077	95-550000-17	21-40-01-064
95-524018-3	27-20-20-030	95-534010-1	25-28-01-007	95-550000-17	21-40-01
95-524018-31	27-20-20	95-534010-2	25-28-01	95-550000-17	21-40-01-082
95-524018-33	27-20-20-068	95-534010-603	25-28-01	95-550000-21	21-40-20-004
95-524018-35	27-20-20-013	95-534010-7	25-28-01-008	95-550000-23	21-40-20-006
95-524018-37	27-20-20	95-534011-7	25-22-02-010	95-550000-31	21-20-01
95-524018-37	27-20-01	95-534017-27	25-13-01-007	95-550000-35	21-40-20-026
95-524018-39	27-20-20-012	95-534017-29	25-13-01-001	95-550000-37	21-40-01-046
95-524018-5	27-20-20	95-534017-31	25-13-01-017	95-550000-37	21-20-01-031
95-524018-604	27-20-20	95-534017-35	25-13-01-020	95-550000-41	21-40-01
95-524018-605	27-20-20	95-534017-35	25-20-01-025	95-550000-43	21-40-20-014
95-524018-605	53-11-01	95-534017-35	25-21-01-007	95-550000-45	21-40-20-008
95-524018-609	53-11-01	95-534017-37	25-13-01-008	95-550000-49	21-20-01-015
95-524018-609	27-20-20	95-534017-38	25-13-01	95-550000-55	21-20-01-010
95-524019-5	27-30-01-007	95-534017-5	25-13-01-011	95-550000-57	21-40-20-002
95-524022-5	27-20-10-017	95-534017-601	25-13-01	95-550000-9	21-20-01-013
95-524023-1	27-10-30-010	95-534017-602	25-13-01	95-550001-1	21-40-01
95-524023-3	27-10-30-012	95-534017-9	25-13-01-016	95-550001-1	21-20-01
95-524023-5	27-30-20-001	95-534018-39	25-20-01-008	95-550001-1	21-40-20
95-524023-7	27-10-30	95-534018-43	25-20-01-011	95-550001-13	30-40-10-019
95-524025	27-30-20	95-534018-47	25-20-01-013	95-550001-15	30-40-10-014
95-524025-1	27-30-20	95-534018-57	25-20-01-016	95-550001-17	21-20-01-029
95-524025-3	27-30-20-004	95-534018-601	25-20-01	95-550001-19	21-40-01
95-524025-7	27-30-20-008	95-534018-602	25-20-01	95-550001-19	21-20-01
95-524029	27-30-20	95-534018-63	25-20-01-001	95-550001-19	21-40-20
95-524030	27-30-20-017	95-534018-69	25-20-01-002	95-550001-23	21-40-20
95-524030	11-30-01-036	95-534018-69	25-13-01-002	95-550001-23	21-20-01
95-524031-1	27-20-15	95-534018-91	25-20-01-017	95-550001-23	21-40-01
95-524034	27-10-20	95-534022-100	53-15-01	95-550001-23	30-40-10
95-524038-11	27-30-01-015	95-534022-21	25-21-01-004	95-550001-27	21-20-10-012
95-524038-12	27-30-01	95-534022-41	53-15-01-069	95-550001-27	21-20-01-016
95-530000-21	25-22-02-011	95-534022-603	25-21-01	95-550001-29	21-20-01-018
95-530000-21	25-22-03-001	95-534022-605	25-21-01	95-550001-29	21-20-10-014
95-530000-23	25-22-03-002	95-534022-615	25-21-01-005	95-550001-31	21-20-10-015
95-530000-23	25-22-02-012	95-534022-616	25-21-01	95-550001-31	21-20-01-020
95-530000-33	25-22-02-016	95-534022-617	25-23-01	95-550001-33	21-20-01-019
95-530000-33	25-22-03-005	95-534022-618	25-23-01	95-550001-33	21-20-10-019
95-530000-33	25-22-01-083	95-534022-620	25-21-01	95-550001-35	21-20-10-018
95-530000-33	53-16-50-025	95-534022-622	25-21-01-018	95-550001-35	21-20-01-022
95-530000-625	25-28-10	95-534022-623	25-21-01-017	95-550001-37	21-20-01-017
95-530000-625	25-28-01	95-534022-65	25-21-01-015	95-550001-37	21-20-10-013
95-530001-111	25-22-03	95-534022-667	25-23-01	95-550001-601	21-20-01-028
95-530001-113	25-22-03-020	95-534022-668	25-23-01	95-550001-7	21-20-01
95-530002-111	25-22-02	95-534022-69	25-21-01-011	95-550002-1	21-40-01
95-530002-37	25-20-01-023	95-534022-73	25-21-01	95-550002-1	21-20-01
95-530002-41	25-20-01-024	95-534022-91	25-21-01-002	95-550002-1	21-40-20
95-530002-53 C	25-28-10-008	95-534022-97	25-23-01	95-550002-1	30-40-10
95-530002-53C	25-22-01-108	95-534022-99	53-15-01-068	95-550002-17	21-40-01-041
95-530002-612	25-28-10	95-534023	25-20-01	95-550002-19	21-40-01-053
95-530002-612	25-28-01	95-534023	25-13-01	95-550002-195	21-40-01
95-530002-73 C	25-28-10-007	95-534023-1	25-13-01-010	95-550002-195	21-20-10
95-530002-73C	25-22-01-109	95-534023-1	25-20-01-019	95-550002-199	21-20-10
95-530002-81	25-22-02-058	95-534026	11-30-01-085	95-550002-199	21-40-01
95-530002-93	25-22-03	95-534026	25-22-02-077	95-550002-199	21-40-20
95-530002-93	25-50-01-001	95-534026	25-22-03-032	95-550002-199	30-40-10
95-530002-95	25-50-01-002	95-534028-1	25-23-01-017	95-550002-201	21-40-20
95-530002-95	25-22-03	95-534028-13	25-23-01-019	95-550002-203	21-40-01
95-530005-53	25-22-05-050	95-534028-601	25-23-01	95-550002-21	21-40-01-054
95-530011-1	25-16-01-001	95-534028-7	25-23-01-018	95-550002-212	30-40-10
95-530011-13	25-16-01-005	95-534028-8	25-23-01	95-550002-213	21-20-10
95-530011-15	25-16-01-006	95-534030-15	25-23-01-125	95-550002-217	21-20-10
95-530011-19	25-16-01-007	95-534030-15	25-20-01	95-550002-219	21-20-10
95-530011-25	25-16-01	95-534030-16	25-20-01	95-550002-219	21-40-01
95-530011-27	25-16-01	95-534030-16	25-23-01	95-550002-219	21-40-20
95-530011-29	25-16-01-003	95-534037	25-22-01-100A	95-550002-221	21-40-20
95-530011-31	25-16-01-004	95-534042	25-23-01	95-550002-221	21-20-10
95-530011-7	25-16-01-002	95-534042	25-22-05	95-550002-221	21-40-01
95-530012-1	39-10-30-057	95-534042-3	25-22-05-128	95-550002-221	30-40-10

PART NUMBER	CHAP/SUB-SECT/UNIT & ITEM
95-550002-229	21-40-01-045
95-550002-23	21-40-01-050
95-550002-233	21-40-20
95-550002-25	21-40-01
95-550002-27	21-40-01-052
95-550002-29	21-40-01-057
95-550002-31	21-40-01-055
95-550002-33	21-40-01
95-550002-47	21-20-10-022
95-550002-47	53-13-01-010
95-550002-49	21-20-10
95-550002-51	53-13-01-015
95-550002-51	30-40-10-008
95-550015-3	21-40-01-038
95-550016	21-20-10-002
95-554011	21-20-01
95-554012-1	21-20-01
95-554014-11	21-40-01-072
95-554014-13	21-40-01
95-554014-15	21-40-01-074
95-554014-23	21-40-01-070
95-554014-601	21-40-01
95-554014-7	21-40-01
95-554014-9	21-40-01-071
95-554015	21-40-01-073
95-554016	21-20-01-024
95-554017-10	25-16-10-009
95-554017-10	30-40-10-004
95-554017-10	25-22-01-079
95-554017-3	30-40-10
95-554017-35	39-10-30-041
95-554017-37	39-10-30
95-554017-9	30-40-10-003
95-554017-9	25-22-01-078
95-554017-9	25-16-10-008
95-554019-1	21-20-01
95-554021	21-40-01
95-554021	21-40-01
95-554021-3	21-40-01
95-554021-3	21-40-01-062
95-554024	21-40-01
95-554025-1	21-40-01-035
95-554025-3	21-40-01-036
95-554028	21-40-01
95-554028	21-40-01-081
95-554028-5	21-40-01-069
95-554028-7	21-40-01-068
95-554036-67	21-22-01
95-554036-69	21-22-01-023
95-554036-71	21-22-01
95-554036-75	21-22-01
95-554036-77	21-22-01-022
95-554037	21-20-01-003
95-554037	21-20-10-001
95-554037-1	21-20-10
95-554038	21-20-10
95-554038-9	21-20-01-001
95-554038-9	21-40-01-037
95-554039	21-20-01-005
95-554039-3	21-20-01-006
95-554040	21-20-01-023
95-554041	30-40-10-009
95-554041-7	30-40-10-007
95-554042	39-10-10-005
95-554043-1	21-22-10-042A
95-554043-1	21-22-20-038
95-590016-13	25-10-01-025
95-590016-17	25-10-01-022
95-590016-21	25-10-01-020
95-590016-23	25-10-01
95-590016-27	25-10-01
95-590016-9	25-10-01-027
95-590017	25-10-01-023
95-590017-1	25-10-01
95-590023	27-70-01-005
95-590023	27-70-01-013
95-590023-5	27-70-01-014
95-590023-5	27-70-01
95-590031	27-70-01
95-590031	25-10-01-001
95-590031-1	27-70-01
95-590031-11	27-70-01
95-590031-13	27-70-01-004
95-590031-3	27-70-01-006
95-590031-7	27-70-01-001
95-590031-9	27-70-01-002
95-590032	27-70-01-003
95-600001-3	55-00-02-012
95-600001-3	55-00-01-012
95-600001-4	55-00-01
95-600001-4	55-00-02
95-610005-11	55-21-01-001
95-610005-3	55-21-01
95-610005-3	55-20-01-009
95-610005-4	55-21-01
95-610005-4	55-20-01
95-610005-43	55-21-01
95-610005-603	55-21-01-002
95-610005-604	55-21-01
95-610006-21	55-21-01-024
95-610006-23	55-20-01-007
95-610006-29	55-21-01-030
95-610006-30	55-21-01
95-610006-33	55-21-01-035
95-610006-37	55-21-01
95-610006-43	55-20-01
95-610006-45	55-20-01
95-610006-601	55-20-01
95-610006-601	55-00-01-004
95-610006-602	55-00-01
95-610006-602	55-20-01
95-610012-13	55-00-01
95-610012-13	55-00-02
95-610012-15	55-00-02-015
95-610012-15	55-00-01-015
95-610012-21	55-00-01
95-610012-21	55-00-02
95-620010-101	55-10-01
95-620010-103	55-10-01
95-620010-105	55-10-01
95-620010-107	55-10-01
95-620010-109	55-10-01
95-620010-11	55-10-01-022
95-620010-113	55-10-01
95-620010-117	55-10-01
95-620010-118	55-10-01
95-620010-13	55-10-01-021
95-620010-135	55-10-01
95-620010-15	55-10-01-020
95-620010-19	55-10-01-028
95-620010-21	55-10-01-045
95-620010-22	55-10-01
95-620010-29	55-10-01-027
95-620010-30	55-10-01
95-620010-31	55-10-01-039
95-620010-33	55-10-01-015
95-620010-35	55-10-01-038
95-620010-39	55-10-01-001
95-620010-41	55-10-01-002
95-620010-43	55-10-01-005
95-620010-45	55-10-01-006
95-620010-5	55-11-01-034
95-620010-5	55-10-01-011
95-620010-53	55-10-01-014
95-620010-55	55-10-01-048
95-620010-604	55-10-01
95-620010-606	55-10-01
95-620010-607	55-10-01
95-620010-608	55-10-01
95-620010-609	55-10-01-058
95-620010-609	55-11-01-069
95-620010-609	27-30-11
95-620010-610	27-30-11
95-620010-610	55-11-01
95-620010-610	55-10-01
95-620010-62	55-11-01-016
95-620010-62	55-10-01-010
95-620010-623	55-10-01
95-620010-623	55-00-01-001
95-620010-624	55-00-01
95-620010-624	55-10-01
95-620010-627	55-10-01
95-620010-630	55-10-01
95-620010-631	55-10-01
95-620010-632	55-10-01
95-620010-633	55-10-01
95-620010-633	55-00-01
95-620010-634	55-00-01
95-620010-634	55-10-01
95-620010-65	55-10-01-030
95-620010-65	55-11-01-040
95-620010-66	55-11-01
95-620010-66	55-10-01
95-620010-67	55-10-01-031
95-620010-67	55-11-01-041
95-620010-68	55-11-01
95-620010-68	55-10-01
95-620010-69	55-10-01-017
95-620010-7	55-10-01-024
95-620010-7	55-11-01-026
95-620010-70	55-10-01
95-620010-71	55-10-01-037
95-620010-71	55-11-01-067
95-620010-73	55-10-01-050
95-620010-75	55-11-01-042
95-620010-75	55-10-01-032
95-620010-77	55-10-01-033
95-620010-77	55-11-01-043
95-620010-79	55-10-01-018
95-620010-80	55-10-01
95-620010-81	55-10-01-019
95-620010-82	55-10-01
95-620010-83	55-10-01-051
95-620010-84	55-10-01
95-620010-85	55-10-01-046
95-620010-85	55-11-01-006
95-620010-87	55-10-01-047
95-620010-89	55-11-01-044
95-620010-89	55-10-01-034
95-620010-9	55-10-01-023
95-620010-91	55-10-01-049
95-620010-92	55-10-01
95-620010-93	55-10-01-041
95-620010-93	55-11-01-065
95-620010-95	55-11-01
95-620010-95	55-10-01-026
95-620010-96	55-10-01
95-620010-96	55-11-01
95-620010-97	55-10-01
95-620010-98	55-10-01
95-6867	32-40-10-004
95-8072	32-40-20-002
95-810002-11	32-10-20
95-810002-13	32-10-20-056
95-810002-17	32-10-20
95-810002-25	32-10-01

PART NUMBER	CHAP/SUB-SECT/UNIT & ITEM	PART NUMBER	CHAP/SUB-SECT/UNIT & ITEM	PART NUMBER	CHAP/SUB-SECT/UNIT & ITEM
95-810002-26	32-10-01	95-810019-121	32-40-31-024	95-920011-14	28-10-01
95-810002-27	32-10-20	95-810019-17	32-40-31-033	95-920011-9	28-10-01
95-810002-29	32-10-20	95-810019-17	32-40-30-051	95-921012-1	11-20-10-020
95-810002-3	32-10-20-046	95-810019-19	32-40-30-044	95-921012-1	11-20-01-015
95-810002-3	32-40-31-044	95-810019-19	32-40-31-059	95-921012-3	11-20-01
95-810002-31	32-10-01	95-810019-21	32-40-30-067	95-921013-1	11-20-10-017
95-810002-32	32-10-01	95-810019-23	32-40-30-069	95-921013-1W-C	11-20-01-014
95-810002-33	32-10-20	95-810019-25	32-40-30-071	95-921013-3	11-20-01
95-810002-35	32-10-01	95-810019-29	32-40-30-070	95-921013-3	11-20-10
95-810002-36	32-10-01	95-810019-31	32-40-30-068	95-921014-1	11-20-10-013
95-810002-37	32-10-20	95-810019-33	32-40-30-072	95-921014-1	11-20-01-022
95-810002-37	32-40-31	95-810019-35	32-40-30-052	95-921014-3	11-20-10
95-810002-38	32-40-31	95-810019-35	32-40-31-027	95-921014-3	11-20-01
95-810002-38	32-10-20	95-810019-37	32-40-31-047	95-921015	11-30-01-024
95-810002-39	32-10-20	95-810019-37	32-40-30-047	95-921015	25-28-01-013
95-810002-4	32-10-20	95-810019-39	32-40-30-056	95-921016-1	11-20-10-019
95-810002-4	32-40-31	95-810019-39	32-40-31-028	95-921016-1	11-20-01-020
95-810002-601	32-10-01	95-810019-41	32-40-31-029	95-921016-3	11-20-01
95-810002-601	32-10-20	95-810019-41	32-40-30-054	95-921016-3	11-20-10
95-810002-602	32-10-20	95-810019-43	27-20-20	95-921018-1	11-20-01-016
95-810002-602	32-10-01	95-810019-45	32-40-30	95-921018-3	11-20-01
95-810002-603	32-10-01	95-810019-7	32-40-30-046	95-921019-1	11-20-01
95-810002-603	32-10-20	95-810019-7	32-40-31-049	95-921019-3	11-20-01
95-810002-604	32-10-20	95-810019-9	32-40-31-052	95-921020-1	11-20-01
95-810002-604	32-10-01	95-810019-9	32-40-30-042	95-921020-1	11-20-10-021
95-810002-607	32-10-01	95-814005-101	32-40-31	95-921020-3	11-20-10
95-810002-607	32-10-20	95-814005-103	32-40-31	95-921020-3	11-20-01
95-810002-608	32-10-20	95-814005-109	32-40-31-005	95-924013-15	28-25-10-020
95-810002-608	32-10-01	95-814005-111	32-40-31-007	95-924013-16	28-25-10-021
95-810002-613	32-10-01	95-814005-113	32-40-31	95-924013-3	28-25-10-016
95-810002-613	32-10-20	95-814005-115	32-40-31	95-924013-3	53-17-01-022
95-810002-614	32-10-01	95-814005-117	32-40-31	95-924013-4	53-17-01
95-810002-614	32-10-20	95-814005-29	32-40-30-028	95-924013-4	28-25-10-017
95-810002-617	32-10-01	95-814005-3	32-40-30-008	95-924013-5	28-25-10-018
95-810002-617	32-10-20	95-814005-3	32-40-31	95-924013-6	28-25-10-019
95-810002-618	32-10-01	95-814005-31	32-40-30-009	95-924014-5	28-20-50-002
95-810002-618	32-10-20	95-814005-33	32-40-30-029	95-924015-3	28-25-10
95-810002-619	32-10-01	95-814005-37	32-40-30	95-924015-3	25-28-01-012
95-810002-619	32-10-20	95-814005-37	32-40-31-066	95-924015-5	25-28-01
95-810002-620	32-10-01	95-814005-38	32-40-31-040	95-924015-5	28-25-10-029
95-810002-620	32-10-20	95-814005-38	32-40-30	95-924015-6	28-25-10
95-810002-651	32-10-01	95-814005-41	32-40-30	95-924015-6	25-28-01
95-810002-651	32-10-20	95-814005-43	32-40-30	95-924015-7	28-25-10
95-810002-652	32-10-01	95-814005-45	32-40-30	95-924015-8	28-25-10
95-810002-652	32-10-20	95-814005-5	32-40-30-022	95-924020	28-25-10
95-810002-693	32-10-20	95-814005-5	32-40-31-037	95-924020-1	28-25-10
95-810002-693	32-10-01	95-814005-9	32-40-31-035	95-924020-1	25-28-01
95-810002-694	32-10-01	95-814005-9	32-40-30-027	95-924020-2	25-28-01
95-810002-694	32-10-20	95-820000-1	32-20-01	95-924020-3	11-30-01
95-810002-7	32-10-01	95-820006	32-30-10	95-924020-5	11-30-01-023
95-810002-7	32-10-01	95-820006-1	32-30-10-017	95-924021	28-25-10
95-810002-755	32-10-01	95-820006-3	32-30-10	95-924021-1	28-25-10
95-810002-755	32-10-20	95-824005-1	32-20-10-042	95-924021-3	11-30-01
95-810002-756	32-10-01	95-824005-3	32-20-10	95-924021-5	11-30-01
95-810002-756	32-10-20	95-824005-601	32-20-10	95-924026	28-25-10-002
95-810002-8	32-10-01	95-824017	32-20-05-009	95-924028	11-30-01-025
95-810002-8	32-10-01	95-824017	11-20-01-030	95-924028	25-28-01-014
95-810005	32-30-01	95-824018-3	32-30-10	95-9279	32-40-22-013
95-810010-7	32-10-10-012	95-824020	32-30-10	95-940011-1	21-20-01
95-810010-8	32-10-10	95-824020-3	32-30-10-051	95-940011-3	21-20-01-030
95-810017	32-30-01	95-910001-151	54-10-01-023	95-940011-3	21-20-10-004
95-810017	32-30-20	95-910001-195	54-10-01-024	95-940011-3	30-40-10-022
95-810017-11	32-30-01	95-910001-43	54-10-01-026	95-940011-5	39-10-30-001
95-810017-5	32-30-01-001	95-910001-43	71-00-01-035	95-940011-5	39-14-40
95-810017-5	32-30-20	95-910001-43	71-00-02-032	95-940011-5	39-14-50
95-810019-101	32-40-31	95-910001-43	71-00-03	95-940011-5	32-40-30
95-810019-105	32-40-31	95-910020	11-20-01-024	95-960007-1	30-60-01-005
95-810019-107	32-40-31-055	95-910020	11-20-10-007	95-960007-19	30-60-01
95-810019-109	32-40-31-056	95-920001-125	25-28-01-011	95-960007-21	30-60-01
95-810019-11	32-40-31-053	95-920001-153	57-10-20-011	95-960007-23	30-60-01-017
95-810019-11	32-40-30-041	95-920011-10	28-10-01	95-960007-25	30-60-01-016
95-810019-119	32-40-31-009	95-920011-13	28-10-01-002	95-960007-27	30-60-01

PART NUMBER	CHAP/SUB-SECT/UNIT & ITEM	PART NUMBER	CHAP/SUB-SECT/UNIT & ITEM	PART NUMBER	CHAP/SUB-SECT/UNIT & ITEM
95-960007-27	30-40-01-012	95-970000-221	30-10-01-024	95-980001-211	54-10-01-065
95-960007-29	30-40-01-011	95-970000-223	30-10-01-049	95-980001-35	54-10-01-001
95-960007-29	30-60-01-025	95-970000-227	30-10-01-050	95-980001-36	54-10-01
95-960007-3	30-40-01	95-970000-239	30-10-01-044	95-980001-603	54-10-01
95-960007-31	30-60-01-033	95-970000-245	30-10-01-042	95-980001-604	54-10-01
95-960007-33	30-60-01-032	95-970000-257	30-10-01-040	95-980001-67	54-10-01-043
95-960007-35	30-60-01-018	95-970000-263	30-10-01-041	95-980001-68	54-10-01
95-960007-37	30-60-01-015	95-970000-269	30-10-01-008	95-980001-73	54-10-01-048
95-960007-39	30-60-01-029	95-970000-27	30-10-01-017	95-980001-75	54-10-01-004
95-960007-41	30-60-01-030	95-970000-275	30-10-01-009	95-980001-76	54-10-01
95-960007-43	30-60-01-027	95-970000-287	30-10-01-051	95-980001-79	54-10-01-005
95-960007-45	30-60-01-021	95-970000-295	30-10-01-018	95-980001-87	54-10-01-062
95-960007-47	30-60-01	95-970000-33	30-10-10-010	95-980001-93	54-10-01-041
95-960007-49	30-60-01-019	95-970000-55	30-10-01-045	95-980001-94	54-10-01
95-960007-51	30-60-01	95-970000-57	30-10-01-030	95-980001-99	54-10-01-010
95-960007-53	30-60-01	95-970000-601	57-20-22	95-980015-1	54-10-01-013
95-960007-602	30-60-01	95-970000-602	57-20-22	95-980015-3	54-10-01-014
95-960007-602	30-40-01-013	95-970000-89	30-10-01-058	95-980017-1	54-10-01-064
95-960007-604	30-60-01	95-970000-93	30-10-01-038	95-980017-2	54-10-01
95-960007-606	30-60-01	95-970000-95	30-10-01-039	9520	39-17-01-044
95-960007-610	30-60-01	95-970000-97	30-10-01-034	954143	24-30-10-006
95-960008-605	30-40-01	95-970012	11-30-01-047	954162	24-30-10-005
95-960015	11-20-01-031	95-980001-113	57-20-15-076	96-000011	11-20-01
95-970000-1	30-10-01-032	95-980001-113	54-10-01-066	96-000011	11-20-10
95-970000-101	30-10-01-043	95-980001-115	54-10-01-071	96-000017	11-20-01-027
95-970000-105	30-10-01-021	95-980001-115	57-20-15-073	96-000019	11-20-01
95-970000-107	30-10-01-027	95-980001-116	57-20-15	96-000021	11-20-01
95-970000-107	30-10-10-057	95-980001-116	54-10-01	96-000022	11-20-01
95-970000-113	30-10-01-057	95-980001-117	54-10-01-070	96-000030	11-20-01
95-970000-115	30-10-01-059	95-980001-117	57-20-15-074	96-000036	11-20-01
95-970000-119	30-10-01-016	95-980001-118	57-20-15	96-000037-1	11-20-10
95-970000-121	30-10-01-014	95-980001-118	54-10-01	96-000125-1	11-20-01
95-970000-123	30-10-01-065	95-980001-119	54-10-01-069	96-000125-3	11-20-01
95-970000-129	30-10-01	95-980001-120	54-10-01	96-000125-5	11-20-01
95-970000-131	30-10-01-007	95-980001-149	54-10-01-057	96-000125-7	11-20-01
95-970000-133	30-10-30-047	95-980001-150	54-10-01	96-000126-1	11-20-10-005
95-970000-141	36-10-10-010	95-980001-153	54-10-01-032	96-000126-3	11-20-10
95-970000-141	34-10-10-017	95-980001-154	54-10-01	96-000126-5	11-20-10-004
95-970000-141	34-10-01-036	95-980001-155	54-10-01-030	96-000126-7	11-20-10
95-970000-149	30-10-10-021	95-980001-156	54-10-01	96-000128	11-20-01
95-970000-15	30-10-01-031	95-980001-161	54-10-01-036	96-000129	11-20-10
95-970000-151	34-10-01	95-980001-162	54-10-01	96-000132	11-20-01
95-970000-151	34-10-10	95-980001-163	54-10-01-037	96-000132-1	11-20-10
95-970000-151	36-10-10-011	95-980001-164	54-10-01	96-100016-51	57-20-06
95-970000-153	30-10-01-028	95-980001-165	54-10-01-035	96-100016-52	57-20-06
95-970000-154	30-10-01	95-980001-169	57-20-05-079	96-100016-53	57-20-06
95-970000-159	30-10-01-053	95-980001-169	57-20-06	96-100016-55	57-20-06
95-970000-16	30-10-01	95-980001-171	54-10-01-063	96-100016-56	57-20-06
95-970000-163	30-10-01-060	95-980001-173	54-10-01-033	96-100016-59	57-20-06
95-970000-165	30-10-01-052	95-980001-174	54-10-01	96-100016-60	57-20-06
95-970000-167	30-10-01-061	95-980001-175	54-10-01-034	96-100016-61	57-20-06
95-970000-169	30-10-01-054	95-980001-181	54-10-01-061	96-100016-62	57-20-06
95-970000-171	30-10-01	95-980001-183	54-10-01-052	96-100016-63	57-20-06
95-970000-175	30-10-01	95-980001-184	54-10-01	96-100016-64	57-20-06
95-970000-179	30-10-01-006	95-980001-185	54-10-01-053	96-100016-65	57-20-06
95-970000-179	30-10-10-056	95-980001-185	54-30-01-013	96-100016-66	57-20-06
95-970000-179	57-20-22	95-980001-186	54-30-01-014	96-100016-97	57-20-06
95-970000-180	57-20-22	95-980001-186	54-10-01	96-100016-98	57-20-06
95-970000-180	30-10-10	95-980001-19	54-10-01-067	96-100016-99	57-20-06
95-970000-180	30-10-01	95-980001-19	57-20-15-071	96-110005-601	57-40-01
95-970000-183	30-10-01	95-980001-195	54-10-01-049	96-110005-601	57-10-01
95-970000-185	30-10-01	95-980001-20	54-10-01	96-110005-602	57-10-01
95-970000-189	30-10-01	95-980001-20	57-20-15	96-110005-602	57-40-01
95-970000-191	30-10-20-009	95-980001-201	57-20-01-013	96-110005-603	57-10-01
95-970000-191	30-10-20-018	95-980001-202	57-20-01	96-110005-603	57-20-01
95-970000-191	30-10-01-020	95-980001-205	57-20-01-014	96-110005-604	57-20-01
95-970000-193	30-10-01-019	95-980001-206	57-20-01	96-110005-604	57-10-01
95-970000-195	30-10-01-025	95-980001-209	57-20-15-072	96-110005-605	57-20-01
95-970000-195	30-10-30-045	95-980001-209	54-10-01-068	96-110005-605	57-10-01
95-970000-195	30-10-20-005	95-980001-210	54-10-01	96-110005-606	57-20-01
95-970000-209	30-10-01-022	95-980001-210	57-20-15	96-110005-606	57-10-01
95-970000-215	30-10-01-023	95-980001-211	57-20-15-075	96-110005-609	57-10-01

PART NUMBER	CHAP/SUB-SECT/UNIT & ITEM
96-110005-609	57-40-01
96-110005-610	57-40-01
96-110005-610	57-10-01
96-110005-619	57-10-20
96-110005-620	57-10-20
96-110005-621	57-10-01
96-110005-621	57-40-01
96-110005-621-1	57-10-01
96-110005-622	57-10-01
96-110005-622	57-40-01
96-110005-622-1	57-10-01
96-110005-623	57-10-01
96-110005-623	57-20-01
96-110005-624	57-10-01
96-110005-624	57-20-01
96-110005-681	57-10-01
96-110005-682	57-10-01
96-110005-683	57-10-01
96-110005-683	57-20-01
96-110005-684	57-10-01
96-110005-684	57-20-01
96-110005-685C	57-10-01
96-110005-686	57-10-01
96-110005-687	57-10-01
96-110005-687	57-20-01
96-110005-688	57-10-01
96-110005-688	57-20-01
96-110005-701-1	57-10-01
96-110005-702-1	57-10-01
96-110007-17	57-20-06-070
96-110007-19	57-20-06-073
96-110007-21	57-20-06-069
96-110007-23	57-20-06-072
96-110007-3	57-20-12-007
96-110007-35	57-20-06
96-110007-36	57-20-06
96-110007-37	57-20-06
96-110007-38	57-20-06
96-110007-39	57-20-06
96-110007-39	57-30-01
96-110007-4	57-20-12
96-110007-40	57-20-06
96-110007-40	57-30-01
96-110007-41	57-30-01
96-110007-41	57-20-06
96-110007-42	57-20-06
96-110007-42	57-30-01
96-110007-43	57-30-01
96-110007-43	57-20-06
96-110007-44	57-20-06
96-110007-44	57-30-01
96-110007-45	57-30-01
96-110007-45	57-20-06
96-110007-46	57-20-06
96-110007-46	57-30-01
96-110007-47	57-20-06
96-110007-48	57-20-06
96-110007-5	57-20-06-020
96-110007-53	57-20-06
96-110007-54	57-20-06
96-110007-57	57-20-06
96-110007-58	57-20-06
96-110007-59	57-20-06
96-110007-6	57-20-06
96-110007-60	57-20-06
96-110007-603	57-20-01
96-110007-603	57-20-06
96-110007-603	57-10-01-001A
96-110007-604	57-10-01
96-110007-604	57-20-01
96-110007-604	57-20-06
96-110007-605	57-20-01
96-110007-605	57-10-01-001B
96-110007-605	57-20-12
96-110007-606	57-20-12
96-110007-606	57-10-01
96-110007-606	57-20-01
96-110007-607	57-20-06
96-110007-608	57-20-06
96-110007-609	57-20-06-032
96-110007-610	57-20-06
96-110007-627	57-20-06
96-110007-628	57-20-06
96-110007-629	57-20-06-092
96-110007-63	57-20-06
96-110007-63	57-30-01
96-110007-630	57-20-06
96-110007-64	57-20-06
96-110007-64	57-30-01
96-110007-65	57-20-06
96-110007-66	57-20-06
96-110007-7	57-20-06
96-110007-75	57-20-06
96-110007-76	57-20-06
96-110007-77	57-20-06
96-110007-78	57-20-06
96-110007-8	57-20-06
96-110010-11	57-10-01
96-110010-13	57-10-01
96-110010-15	57-10-01
96-110010-17	54-50-01-003
96-110010-19	54-50-01
96-110010-21	54-50-01-004
96-110010-23	54-50-01
96-110010-5	57-10-01-026
96-110010-6	57-10-01
96-110010-7	57-10-01-027
96-110010-8	57-10-01
96-110010-9	57-10-01
96-110016-5	57-10-10
96-110016-7	57-10-10
96-110016-79	57-20-06
96-110016-80	57-20-06
96-110019-3	57-10-10
96-110019-5	57-30-01
96-110020-1	57-20-12
96-110020-2	57-20-12
96-160006-3	11-20-01
96-170000-11	57-20-21-004
96-170000-11	57-30-01
96-170000-11	57-20-22-031
96-170000-12	57-20-22
96-170000-12	57-30-01
96-170000-12	57-20-21
96-170000-15	57-20-21-029
96-170000-16	57-20-21
96-170000-19	57-20-21
96-170000-20	57-20-21
96-170000-21	57-20-21-027
96-170000-22	57-20-21
96-170000-3	57-20-21-028
96-170000-3	57-20-22-020
96-170000-4	57-20-22
96-170000-4	57-20-21
96-170000-45	57-20-21-024
96-170000-45	57-20-22-004
96-170000-46	57-20-22
96-170000-46	57-20-21
96-170000-47	57-20-22-013
96-170000-47	57-20-21-035
96-170000-48	57-20-21
96-170000-48	57-20-22
96-170000-49	57-20-22-038
96-170000-5	57-20-22-021
96-170000-5	57-20-21-032
96-170000-603	57-20-21
96-170000-603	57-10-01
96-170000-604	57-10-01
96-170000-604	57-20-21
96-170000-605	57-20-22
96-170000-605	57-20-21
96-170000-606	57-20-21
96-170000-606	57-20-22
96-170000-609	57-20-21
96-170000-61	57-20-21
96-170000-61	57-20-22-019
96-170000-610	57-20-21
96-170000-62	57-20-22
96-170000-62	57-20-21
96-170000-7	57-20-21-026
96-170000-8	57-20-21
96-300001-11	32-40-01-009
96-300001-13	32-40-01-006
96-300001-15	32-40-21
96-300001-19	32-40-01-011
96-300001-23	32-40-01-008
96-300001-29	32-40-21-007
96-300001-3	32-40-01
96-300001-3	32-10-20-053
96-300001-3	32-10-10-060
96-300001-31	32-40-21-008
96-300001-35	32-40-21-005
96-300001-37	32-40-21-003
96-300001-41	32-40-20-008
96-300001-41	32-40-21-011
96-300001-43	32-40-21-015
96-300001-45	32-40-21-016
96-300001-47	32-40-21-017
96-300001-49	32-40-21-006
96-300001-5	32-40-21
96-300001-5	32-10-10
96-300001-5	32-10-20
96-300001-51	32-10-20
96-300001-51	32-40-01
96-300001-57	32-40-01
96-300001-9	32-40-21-018
96-321000-1	36-10-01
96-321000-1	30-10-30
96-321000-11	30-10-30
96-321000-11	36-10-01-035
96-321000-13	36-10-01
96-321000-13	30-10-30-026
96-321000-15	30-10-30
96-321000-15	36-10-01-032
96-321000-17	36-10-01-020
96-321000-17	30-10-30-016
96-321000-19	30-10-30
96-321000-19	36-10-01
96-321000-23	36-10-01-024
96-321000-37	36-10-01-029
96-321000-37	30-10-30-025
96-321000-37	30-10-30-029
96-321000-41	30-10-30
96-321000-9	30-10-30-028
96-321000-9	36-10-01-034
96-324005	39-10-01
96-324005	39-14-40
96-324005	34-10-20
96-324005-29	39-14-10
96-324005-7	39-10-01
96-324006	39-10-01
96-324006	39-14-10
96-324006	39-14-40
96-324006	34-10-20
96-324006-123	76-15-01-050
96-324006-124	76-15-01

PART NUMBER	CHAP/SUB-SECT/UNIT & ITEM	PART NUMBER	CHAP/SUB-SECT/UNIT & ITEM	PART NUMBER	CHAP/SUB-SECT/UNIT & ITEM
96-324006-135	76-15-01	96-324030-13	39-10-10	96-324038-110	39-17-20-019
96-324006-257	76-15-01-002	96-324030-29	39-10-10-001	96-324038-110	39-17-10-028
96-324006-261	76-15-01	96-324030-29	39-10-01	96-324038-110	39-17-30-018
96-324006-265	76-15-01-005	96-324030-3	39-10-01	96-324038-112	39-17-30-020
96-324008	34-10-20	96-324030-55	39-10-01-001	96-324038-112	39-17-10-030
96-324008	39-14-50	96-324031	39-14-40	96-324038-112	39-17-20-021
96-324008	39-14-20	96-324032-1	39-14-10	96-324038-113	39-17-10-018
96-324008	39-10-10	96-324032-5	39-14-10	96-324038-129	34-10-01
96-324008-1	39-14-20-001	96-324033	39-14-10	96-324038-129	34-10-10-033
96-324008-3	39-14-20-004	96-324033-13	39-14-10	96-324038-131	34-10-10-031
96-324010-5	39-10-01-004	96-324033-17	39-14-10	96-324038-131	34-10-01-027
96-324010-7	39-14-10	96-324033-23	39-14-10	96-324038-17	39-17-10-035
96-324010-7	39-14-01-038	96-324033-23	39-14-10	96-324038-19	39-17-10-034
96-324012-19	36-10-10-044	96-324033-23	34-10-20	96-324038-27	39-17-10
96-324012-21	36-10-10-036	96-324033-3	39-14-10	96-324038-29	39-17-10
96-324012-23	36-10-10-042	96-324033-3	39-14-20	96-324038-31	39-17-10
96-324012-25	36-10-10-041	96-324034	39-14-40	96-324038-33	39-17-10
96-324012-25	36-10-01-049	96-324034-1	39-14-40	96-324038-35	34-10-01
96-324012-27	36-10-10-025	96-324034-11	30-10-10-048	96-324038-37	34-10-01
96-324012-27	30-10-30-030	96-324034-17	39-14-40	96-324038-39	34-10-01-003
96-324012-29	30-10-30-035	96-324035	76-15-01	96-324038-39	34-10-10-046
96-324012-29	36-10-10-031	96-324035-17	53-25-01-036	96-324038-39	36-10-10-004
96-324012-29	36-10-01-043	96-324035-18	53-25-01	96-324038-41	34-10-01
96-324012-3	36-10-01	96-324035-21	76-15-01	96-324038-43	34-10-01
96-324012-3	36-10-10	96-324035-29	27-10-01-033	96-324038-45	34-10-01
96-324012-3	34-10-10	96-324035-29	53-25-01	96-324038-47	34-10-01
96-324012-31	36-10-10-033	96-324035-31	53-25-01	96-324038-49	39-17-10-023
96-324012-33	36-10-10-050	96-324035-31	27-50-20-017	96-324038-5	34-10-01
96-324012-33	39-17-20-014	96-324035-33	53-25-01	96-324038-51	39-17-10-022
96-324012-35	39-17-20-013	96-324035-35	76-15-01	96-324038-55	39-17-10-020
96-324012-35	36-10-10-049	96-324035-37	76-15-01	96-324038-61	34-10-01-020
96-324012-37	36-10-10-030	96-324035-5	53-25-01	96-324038-61	34-10-10-026
96-324012-37	36-10-01-042	96-324035-601	53-25-01	96-324038-63	34-10-10-005
96-324012-37	30-10-30-034	96-324035-601	27-30-20	96-324038-63	34-10-01
96-324012-39	30-10-30-033	96-324035-601	27-10-30	96-324038-63	36-10-10-019
96-324012-39	36-10-01-041	96-324035-601	27-20-15	96-324038-65	36-10-10-018
96-324012-39	36-10-10-028	96-324035-603	53-25-01	96-324038-65	34-10-01
96-324012-41	36-10-10-035	96-324035-606	53-25-01	96-324038-65	34-10-10-006
96-324012-43	36-10-10-051	96-324035-61	34-10-20	96-324038-67	34-10-10-007
96-324012-43	36-10-01-036	96-324035-7	27-50-20-009	96-324038-67	34-10-01
96-324012-65	34-10-10-013	96-324035-7	53-25-01-035	96-324038-67	36-10-10-017
96-324012-65	34-10-01-028	96-324035-8	53-25-01	96-324038-69	36-10-10-015
96-324018-1	39-17-10-001	96-324035-8	53-25-01-067	96-324038-69	34-10-01
96-324018-13	36-10-10-007	96-324035-9	53-25-01-005	96-324038-69	34-10-10-009
96-324018-13	34-10-10-025	96-324036-1	53-25-01-056	96-324038-77	34-10-10-003
96-324018-3	39-17-10	96-324036-13	53-25-01-055	96-324038-77	34-10-01
96-324018-4	39-17-10	96-324036-5	53-25-01-057	96-324038-77	36-10-10-021
96-324018-5	39-17-10-045	96-324036-603	27-20-15-022	96-324038-78	36-10-10
96-324018-6	39-17-10-046	96-324036-603	27-30-20-024	96-324038-78	34-10-01
96-324018-7	39-17-10	96-324036-604	27-10-30-023	96-324038-78	34-10-10
96-324018-8	39-17-10	96-324036-7	53-25-01-062	96-324038-81	39-17-10
96-324019	11-30-01-007	96-324036-7	53-25-01-046	96-324038-83	39-17-10
96-324020	31-30-01	96-324037-1	53-25-01-008	96-324038-85	39-17-10-037
96-324020-3	11-30-01-056	96-324037-1	53-25-01	96-324038-87	39-17-10
96-324022	31-30-01	96-324037-1	11-30-01	96-324038-89	39-17-10
96-324022-3	11-30-01-057	96-324037-1	11-30-10-003	96-324038-9	39-17-10
96-324022-3	39-14-01-022	96-324038	34-10-01	96-324038-91	39-17-10
96-324023	31-30-01	96-324038	34-10-01	96-324038-93	39-17-10-032
96-324024	31-30-01	96-324038	34-10-01	96-324038-93	39-17-20-022
96-324027	11-30-01-026	96-324038	39-17-10	96-324038-93	39-17-30-001
96-324028-13	39-17-10-043	96-324038-103	39-17-10-049	96-324038-95	36-10-10-013
96-324029	39-14-40	96-324038-103	39-17-20-036	96-324038-95	34-10-01-041
96-324029	39-14-10	96-324038-104	39-17-20	96-324038-97	34-10-01-015
96-324029	39-10-01	96-324038-104	39-17-10-050	96-324038-99	39-17-20-028
96-324029	34-10-20	96-324038-105	39-17-20-037	96-324038-99	39-17-30-007
96-324029-3	39-14-50-001	96-324038-106	39-17-20	96-324039	39-14-40
96-324029-7	53-16-50-032	96-324038-107	39-17-20-038	96-324039-3	39-14-40
96-324029-9	39-14-40	96-324038-107	39-17-10-047	96-324039-5	39-14-40
96-324029-9	39-10-01	96-324038-108	39-17-10-048	96-324039-7	39-14-40
96-324029-9	39-14-10	96-324038-108	39-17-20	96-324040	53-25-01-061
96-324029-9	34-10-20	96-324038-109	34-10-01	96-324040	27-10-30
96-324030-13	39-10-01-022	96-324038-11	39-17-10	96-324041	27-20-15

PART NUMBER	CHAP/SUB-SECT/UNIT & ITEM	PART NUMBER	CHAP/SUB-SECT/UNIT & ITEM	PART NUMBER	CHAP/SUB-SECT/UNIT & ITEM
96-324041	27-30-20	96-324055-73	76-16-01-018	96-324128-1	34-10-10
96-324041	11-30-10-050	96-324055-77	76-16-01-022	96-324128-11	39-17-30
96-324041	11-30-01-032	96-324055-89	76-16-01	96-324128-11	39-17-20
96-324041	53-25-01-065	96-324055-90	76-16-01	96-324128-11	39-17-10
96-324042	53-25-01-060	96-324055-91	27-10-01-034	96-324128-13	39-17-20
96-324042	11-30-01-028	96-324055-97	76-12-01-018	96-324128-13	39-17-30
96-324042	11-30-10-051	96-324055-99	27-50-20-042	96-324128-15	39-17-30-005
96-324042	27-10-30-024	96-324056	34-10-20	96-324128-15	39-17-20-026
96-324043	27-30-20-025	96-324056	39-14-40	96-324128-15	39-17-10
96-324043	11-30-01-029	96-324056	39-14-10	96-324128-17	39-17-10
96-324043	11-30-10-052	96-324056	39-10-01	96-324128-17	39-17-20-023
96-324043	53-25-01-064	96-324056-3	39-10-10	96-324128-17	39-17-30-002
96-324044	53-25-01-063	96-324056-3	39-10-01	96-324128-19	34-10-10-035
96-324044	11-30-10-054	96-324056-3	39-10-20	96-324128-21	34-10-10-034
96-324044	11-30-01-030	96-324056-5	39-10-20-023	96-324128-21	34-10-01-017
96-324044	27-20-15-023	96-324056-5	39-10-10-006	96-324128-23	39-17-30
96-324045	11-30-10-055	96-324057	27-50-20-059	96-324128-23	39-17-20
96-324045	53-25-01	96-324060	39-14-10	96-324128-23	39-17-10-038
96-324047	53-25-01	96-324062-1	30-10-10	96-324128-25	39-17-10-039
96-324048	53-25-01-058	96-324062-3	30-10-10	96-324128-25	39-17-20
96-324048	11-30-01-033	96-324062-3	39-14-40-001	96-324128-25	39-17-30
96-324048-1	11-30-01-034	96-324063	11-30-10-030	96-324128-27	39-17-30
96-324049	11-30-01-031	96-324068	34-10-10	96-324128-27	39-17-20
96-324049	53-25-01-066	96-324068-3	34-10-10	96-324128-27	39-17-10-031
96-324050	53-25-01-059	96-324068-3	34-10-10	96-324128-29	39-17-10-040
96-324050	11-30-10-056	96-324068-3	36-10-10	96-324128-29	39-17-20-030
96-324052	53-25-01	96-324074	39-14-40-002	96-324128-29	39-17-30-009
96-324054 1	34-10-01	96-324075	39-14-30-002	96-324128-3	39-17-30
96-324054-1	34-10-01	96-324075	39-14-20-009	96-324128-3	34-10-10
96-324054-1	34-10-10	96-324077	11-30-01	96-324128-31	39-17-30-012
96-324054-3	34-10-01	96-324078-33	39-17-30-023	96-324128-31	39-17-20-033
96-324054-5	34-10-01	96-324078-41	39-17-30	96-324128-31	39-17-10
96-324055	27-20-15	96-324078-45	39-17-30-024	96-324128-33	39-17-10
96-324055	27-10-30	96-324088	39-10-01	96-324128-33	39-17-20-031
96-324055	27-30-20	96-324101	78-10-01	96-324128-33	39-17-30-010
96-324055	76-16-01	96-324101	78-12-01	96-324128-39	39-17-30-011
96-324055	53-25-01	96-324101-1	78-12-01-020	96-324128-39	39-17-20-032
96-324055-1	76-16-01	96-324101-1	78-10-01-020	96-324128-39	39-17-10
96-324055-101	27-50-20-052	96-324101-13	78-13-01	96-324128-61	39-17-20-002
96-324055-103	76-16-01	96-324101-2	78-10-01	96-324128-61	39-17-30-039
96-324055-105	76-16-01	96-324101-2	78-12-01	96-324128-63	39-17-30-040
96-324055-107	53-25-01	96-324101-7	78-12-01	96-324128-63	39-17-20-001
96-324055-109	53-25-01	96-324101-7	78-10-01	96-324128-85	39-17-30-028
96-324055-109	53-25-01	96-324101-9	78-13-01	96-324128-87	39-17-30-036
96-324055-111	53-25-01	96-324102-1	32-60-01	96-324128-89	39-17-30-034
96-324055-111	27-50-20-029	96-324102-1	53-25-01	96-324128-9	39-17-30-032
96-324055-113	53-25-01	96-324102-27	36-10-01-037	96-324128-9	39-17-20-011
96-324055-113	53-25-01	96-324102-5	32-60-01	96-324128-91	39-17-30-025
96-324055-115	27-10-30	96-324102-601	53-25-01	96-324128-93	39-17-30-029
96-324055-117	27-10-30	96-324102-7	53-25-01	96-324128-95	36-10-01-059
96-324055-119	27-50-20	96-324103	53-25-01	96-324128-99	36-10-01-060
96-324055-119	27-50-20	96-324103	11-30-10-045	96-324131-1	39-14-80-013
96-324055-121	27-50-20-018	96-324104-1	53-25-01	96-324131-7	39-14-80-014
96-324055-121	27-50-20-030	96-324105	32-60-01-010	96-324131-9	39-14-80
96-324055-13	27-50-20-048	96-324106-1	34-10-10	96-324137	53-25-01
96-324055-151	76-16-01-020	96-324106-7	34-10-10	96-324139-9	39-10-20
96-324055-151	76-15-01-020	96-324117	39-10-10-013	96-324140	39-14-20-011
96-324055-153	76-16-01	96-324117	39-10-01-012	96-324141	34-10-10
96-324055-21	53-25-01	96-324122	39-14-20	96-324141	34-10-01
96-324055-23	53-25-01	96-324122-5	39-14-10	96-324148	34-10-01
96-324055-25	53-25-01	96-324122-7	39-14-10	96-324148	36-10-10-012
96-324055-25	27-50-20-025	96-324122-9	39-14-10	96-324158-19	39-14-60
96-324055-31	76-16-01-043	96-324123-1	39-14-20-008	96-324158-23	39-14-60-001
96-324055-33	76-16-01-045	96-324123-1	39-14-10	96-324167	39-10-20
96-324055-35	76-16-01-055	96-324123-13	39-14-10-001	96-324167-1	39-10-20-002
96-324055-37	76-16-01-054	96-324123-17	39-14-10	96-324168-7	53-25-01
96-324055-39	76-16-01-053	96-324123-21	39-14-10	96-324168-7	27-50-20-054
96-324055-40	76-16-01	96-324125-1	39-14-50	96-324174-3	32-60-01
96-324055-41	76-16-01-050	96-324126-1	39-14-50-003	96-324174-5	53-25-01
96-324055-47	27-50-20-039	96-324127-3	39-14-50-004	96-324174-601	53-25-01
96-324055-7	27-50-20-040	96-324128	39-17-20	96-324175-1	39-14-30
96-324055-71	76-16-01	96-324128-1	39-17-30	96-324175-9	39-14-30

PART NUMBER	CHAP/SUB-SECT/UNIT & ITEM	PART NUMBER	CHAP/SUB-SECT/UNIT & ITEM	PART NUMBER	CHAP/SUB-SECT/UNIT & ITEM
96-324185-1	39-14-30	96-361011	27-50-30	96-364038-3	11-30-01
96-324185-13	39-14-30-003	96-361011-11	27-50-30-015	96-364045	33-40-03
96-324185-21	39-14-30-004	96-361011-11	57-20-15	96-364045-1	33-40-03-002
96-324189	39-14-60-020	96-361011-13	57-20-15	96-364049	11-30-10-027
96-324191	39-14-30	96-361011-13	27-50-30-016	96-364052	24-00-01
96-324191-1	39-14-30	96-361011-15	27-50-30	96-364054-3	33-10-01
96-324194-601	24-00-01	96-361011-15	24-01-01	96-364054-7	33-10-01
96-324200-1	39-14-30-012	96-361011-601	24-01-01	96-364055-601	39-14-50-007
96-324200-5	39-14-10-010	96-361011-601	27-50-30	96-364058	33-30-01
96-329011	39-10-01	96-361011-601	57-20-15	96-364058	24-00-01-022
96-340025	39-10-01-010	96-361011-7	57-20-15-085	96-364058-1	33-30-01-001
96-340025	39-10-10-020	96-361011-7	27-50-30-017	96-364059	24-00-01
96-340025	39-10-20-018	96-361011-9	27-50-30-018	96-364059	11-30-10-025
96-340061	11-30-01-058	96-361011-9	57-20-15-086	96-364060-13	24-00-01-001
96-360000	24-01-01	96-361013	57-20-15	96-364060-13	39-14-80
96-360000	24-30-20	96-361013	27-50-30	96-364060-3	24-00-01
96-360000	24-00-01	96-361013	24-01-01	96-364060-601	39-14-80-002
96-360000-601	33-40-08	96-361013-601	24-01-01	96-364060-603	39-14-80
96-360000-602	33-40-08	96-361013-601	27-50-30	96-364060-605	39-14-80
96-360000-605	24-00-01	96-361013-601	27-50-30	96-364060-7	24-00-01
96-360000-607	24-00-01	96-361013-601	27-50-30	96-364060-9	24-00-01
96-360000-613	24-00-01	96-361013-601	57-20-15	96-364061	39-14-80-010
96-360002	24-01-01	96-364001	24-30-20	96-364061	39-14-80
96-360002	24-30-20	96-364001	24-00-01	96-364064	24-00-01
96-360002	24-00-01	96-364010	33-45-01	96-364064	11-30-10-036
96-360002-11	24-01-01	96-364010-3	33-45-01	96-364068-1	24-30-20-002
96-360002-13	24-01-01	96-364012	33-40-01	96-364068-11	24-30-20-003
96-360002-15	24-01-01-008	96-364012	32-20-10	96-364068-3	24-30-20
96-360002-607	24-00-01	96-364012-3	32-20-10-066	96-364068-5	24-30-20-004
96-360002-7	24-01-01	96-364012-3	33-40-01	96-364068-601	24-30-20
96-360002-7	24-00-01	96-364012-5	33-40-03-005	96-364068-7	24-30-20
96-360005-603	21-22-30	96-364012-5	33-40-01-006	96-364068-9	24-30-20
96-360005-679	57-20-22	96-364012-5	33-40-05-006	96-364071	11-30-10-037
96-360005-680	57-20-22	96-364012-5	33-40-07-006	96-364078	33-49-01
96-360011	57-20-15	96-364012-5	32-20-10-069	96-364078-1	33-49-01
96-360011-15	57-20-15	96-364013-1	25-23-01-056	96-364078-3	33-49-01-015
96-360011-605	24-00-01	96-364015	33-10-01	96-364084-3	11-30-10-015
96-360011-611	24-00-01	96-364015-1	33-10-01	96-364084-5	11-30-10-016
96-360011-612	24-00-01	96-364015-3	33-10-01	96-364084-9	11-30-10-017
96-360011-617	24-00-01	96-364015-5	33-10-01	96-364086	33-44-01
96-360011-618	24-00-01	96-364016	11-30-10-026	96-364086-1	33-44-01-001
96-360011-639	39-10-30-040	96-364023	24-00-01	96-364086-11	33-44-01
96-360011-640	39-10-30	96-364033-11	24-00-01	96-364086-3	33-44-01
96-360011-643	24-00-01	96-364033-601	39-14-80	96-364086-5	33-44-01-009
96-360011-644	24-00-01	96-364033-602	39-14-80	96-364087	33-44-01-010
96-360011-645	24-00-01	96-364033-603	39-14-80	96-364087	33-44-10-016
96-360011-646	24-00-01	96-364033-604	39-14-80	96-364087	11-30-10-035
96-360011-652	39-10-30	96-364033-605	39-14-80	96-364089-1	33-10-01
96-360011-653	39-10-30	96-364033-606	39-14-80	96-364089-3	33-10-01
96-360011-658	24-00-01	96-364033-607	39-14-80	96-364090-11	27-10-20-032
96-360011-660	57-20-01	96-364033-608	39-14-80	96-364090-17	27-10-20
96-360011-661	57-20-01	96-364033-617	39-14-80	96-364090-2	27-10-20
96-360011-662	57-20-01	96-364033-618	39-14-80	96-364090-21	27-10-20-030
96-360011-663	57-20-01	96-364033-622	39-14-80	96-364090-25	27-10-20
96-360011-664	57-20-01	96-364033-9	39-14-80	96-364090-3	27-10-20
96-360011-671	57-20-21-034	96-364033-9	24-00-01	96-364090-4	27-10-20
96-360011-672	57-20-21	96-364035	11-30-01-063	96-364090-5	27-10-20-033
96-360011-678	33-40-08	96-364035	39-14-80-007	96-364090-6	27-10-20
96-360011-679	33-40-08	96-364035-1	11-30-01-064	96-364090-9	27-10-20-034
96-360011-687	24-00-01	96-364036	33-45-01	96-380014-1	39-14-01-005
96-360014	11-30-01-071	96-364036-1	33-45-01	96-380014-1	39-10-01-002
96-360015-678	33-40-08	96-364036-3	33-45-01	96-380014-3	39-10-01
96-360015-679	33-40-08	96-364036-5	33-45-01	96-380014-3	39-10-10-014
96-360024	24-01-01	96-364036-7	33-45-01	96-380014-3	39-10-20-007
96-360024-1	33-44-10	96-364036-7	55-30-01	96-380015-5	39-10-20-009
96-360024-3	33-44-10	96-364036-9	33-45-01	96-380015-5	39-10-10-016
96-360024-601	57-20-21	96-364037-5	11-30-10-028	96-380015-5	39-10-01
96-360024-602	57-20-21	96-364037-5	24-00-01	96-380016	39-10-01-011
96-361000	24-01-01	96-364038-1	24-00-01-004	96-380016	39-14-01-004
96-361010	33-48-01	96-364038-1	11-30-01	96-380016	39-14-40
96-361010-1	33-48-01-002	96-364038-1	39-14-80	96-380016-1	39-14-40
96-361010-3	33-48-01	96-364038-3	39-14-80	96-380016-1	39-14-50-028

PART NUMBER	CHAP/SUB-SECT/UNIT & ITEM
96-380016-1	39-14-60-003
96-380016-1	39-10-01
96-380020	28-20-01
96-380020-1	28-20-01
96-380021-17	71-12-01-085
96-380021-3	71-10-01-071
96-380022	32-30-30
96-380022	32-30-20-038
96-380022	24-00-01-040
96-380023	21-40-01-043
96-380023	21-40-60
96-380023	21-40-60
96-380023	21-40-60
96-380024	39-10-01
96-380024	39-14-01-002
96-380025	39-14-80
96-380029	71-02-01
96-380029-5	30-10-20
96-380030	71-02-01
96-380030	71-02-02
96-380030	61-22-01
96-380030-1	61-22-02
96-380030-1	71-02-02-015
96-380030-1	71-02-01-016
96-380031	61-20-02
96-380031	71-00-03-014
96-380031	71-00-02-014
96-380031-1	71-00-03
96-380031-1	61-20-03
96-380033-5	30-10-20-035
96-380034-1	32-40-30
96-380034-1	32-40-30
96-380034-1	32-40-31-021
96-380034-1	32-40-41
96-380034-1	32-40-41
96-380035	28-10-01
96-380035-1	28-10-20
96-380035-3	28-10-20
96-380035-5	28-10-20
96-380036-1	28-10-20
96-380036-1	28-10-01
96-380036-3	28-10-01
96-380036-3	28-10-20
96-380039	39-14-20-016
96-380041-1	28-10-01
96-380042-1	28-10-01
96-380042-3	28-10-01
96-380043-5	28-10-01
96-380043-7	28-10-01
96-380044-7	28-10-01
96-380044-9	28-10-01
96-380045-1	30-10-20-002
96-380045-1	30-10-30-049
96-380045-2	30-10-30-055
96-380045-2	30-10-20-013
96-380046-7	28-10-01
96-380046-8	28-10-01
96-384007	52-35-02
96-384013	39-10-10
96-384013-1	39-10-10
96-384013-1	39-10-20-019
96-384013-1	39-14-30
96-384013-3	39-10-20
96-384013-3	36-10-01
96-384043-1	39-14-60-005
96-384050-1	33-44-01
96-384050-5	39-14-60
96-384050-5	39-14-60
96-384050-5	39-14-80
96-384050-5	39-14-80
96-384050-7	39-14-60
96-384050-7	39-14-60
96-384050-7	32-60-01
96-384050-9	39-14-60
96-384050-9	39-14-60
96-384050-9	39-14-60
96-384052-1	39-14-40
96-384052-1	39-10-01-023
96-384052-3	39-10-01
96-384052-3	39-14-40-028
96-384053-1	39-14-40-034
96-384053-1	39-10-01-029
96-384054-1	39-10-01-028
96-384054-1	39-14-40-033
96-384054-11	39-10-01
96-384054-7	39-10-01
96-384055-1	39-10-01-027
96-384055-1	39-14-40-032
96-384056-1	39-14-40-031
96-384056-1	39-10-01-026
96-384056-1	39-10-20
96-384057-1	39-10-01-025
96-384057-1	39-14-40-030
96-384057-3	39-10-20
96-384058-1	39-10-01-024
96-384058-1	39-14-40-029
96-384058-3	39-14-60
96-384059-1	39-14-40
96-384059-1	39-10-01
96-384059-1	39-10-01
96-384059-3	39-10-20
96-384061-1	30-10-20
96-384061-1	30-10-30
96-384062-1	30-60-10
96-384062-5	30-62-01
96-384062-5	30-64-01
96-384062-7	30-64-01
96-384062-7	30-62-01
96-384062-7	30-60-10
96-384063-1	39-14-30
96-384069-1	39-10-20
96-389000	71-00-01
96-389000	71-00-03
96-389000	71-00-02
96-389000	71-02-01-018
96-389000	71-02-02-017
96-389006	71-02-01
96-400000-61	53-18-01-038
96-400000-612	53-10-01
96-400000-632	53-14-01
96-400000-633	53-14-01
96-400000-634	53-14-01-032
96-400000-638	53-14-01
96-400000-681	53-16-50
96-400001-612	53-11-01
96-410000-29	21-40-01
96-410000-33	21-40-01-079
96-410010-1	53-50-20-001
96-410010-23	53-50-20
96-410010-3	53-50-20-002
96-410010-650	53-50-20
96-410010-655	53-50-20
96-410021-15	53-50-10-005
96-410021-16	53-50-10
96-410021-603	53-50-10
96-410021-605	53-50-10
96-410021-607	53-50-10-002
96-410021-609	53-50-10-001
96-410021-613	53-50-10
96-410021-615	53-50-10
96-410024-1	53-11-01
96-410024-1	32-20-30
96-410024-2	32-20-30
96-410024-601	32-20-30
96-410024-602	32-20-30
96-410024-9	32-20-30
96-410029-602	53-10-01-061
96-410031	53-11-01
96-410031	24-30-20
96-410031-1	53-11-01-077
96-410031-10	53-11-01
96-410031-13	53-11-01-023
96-410031-14	53-11-01
96-410031-15	53-11-01-033
96-410031-16	53-11-01
96-410031-17	53-11-01-035
96-410031-19	53-11-01-032
96-410031-20	53-11-01
96-410031-21	53-11-01-031
96-410031-22	53-11-01
96-410031-23	53-11-01-030
96-410031-25	53-11-01-029
96-410031-26	53-11-01
96-410031-27	53-11-01-027
96-410031-28	53-11-01
96-410031-29	25-28-20-020
96-410031-3	53-11-01-074
96-410031-33	53-11-01
96-410031-37	53-32-01-001
96-410031-39	53-32-01-002
96-410031-49	53-11-01
96-410031-5	53-11-01-075
96-410031-7	53-11-01-076
96-410031-9	53-11-01-043
96-410032	53-16-51
96-410032-10	53-12-01
96-410032-107	53-13-01
96-410032-11	53-12-01
96-410032-12	53-12-01
96-410032-13	53-12-01-003
96-410032-14	53-12-01
96-410032-19	53-13-01-032
96-410032-21	53-13-01-030
96-410032-23	53-13-01-037
96-410032-23	53-11-01-082
96-410032-24	53-11-01
96-410032-24	53-13-01
96-410032-25	53-13-01
96-410032-27	53-13-01-031
96-410032-28	53-13-01
96-410032-3	53-12-01-010
96-410032-31	53-13-01-033
96-410032-35	53-11-01
96-410032-4	53-12-01
96-410032-5	53-12-01-017
96-410032-51	53-12-01
96-410032-52	53-12-01
96-410032-601	53-12-01
96-410032-602	53-12-01
96-410032-604	53-13-01
96-410032-604	53-11-01-002
96-410032-607	53-12-01
96-410032-608	53-12-01
96-410032-611	53-12-01
96-410032-611	53-11-01-001
96-410032-612	53-11-01
96-410032-612	53-12-01
96-410032-615	53-13-01
96-410032-621	53-12-01
96-410032-621	53-11-01
96-410032-622	53-11-01
96-410032-622	53-12-01
96-410032-625	53-13-01
96-410032-9	53-12-01
96-410069	53-13-01-035
96-420000	53-15-01

PART NUMBER	CHAP/SUB-SECT/UNIT & ITEM
96-420000-17	53-15-01
96-420000-19	53-15-01
96-420000-19	53-16-51
96-420000-21	53-16-51
96-420000-21	53-15-01
96-420000-23	53-30-01-017
96-420000-25	53-30-01
96-420000-27	53-30-01-013
96-420000-3	53-15-01-047
96-420000-603	53-15-01
96-420000-612	53-14-01
96-420000-7	53-15-01-048
96-420001-1	53-15-01
96-420001-1	53-14-50
96-420001-101	53-16-50
96-420001-101	53-16-51
96-420001-103	53-11-01-057
96-420001-105	53-14-50-018
96-420001-11	53-11-01-051
96-420001-111	53-32-01-011
96-420001-12	53-11-01
96-420001-121	53-32-01-025
96-420001-127	53-14-50
96-420001-13	53-11-01
96-420001-14	53-11-01
96-420001-15	53-14-50-016
96-420001-165	53-11-01
96-420001-166	53-11-01
96-420001-167	53-11-01
96-420001-168	53-11-01
96-420001-17	53-14-50-017
96-420001-187	53-15-01
96-420001-187	53-16-51
96-420001-189	53-16-51
96-420001-189	53-15-01
96-420001-189	53-14-50
96-420001-19	53-16-51-028
96-420001-191	53-16-51-037
96-420001-192	53-16-51-038
96-420001-195	53-16-51-049
96-420001-195	53-32-01-010
96-420001-197	53-16-51-050
96-420001-197	53-11-01
96-420001-198	53-11-01
96-420001-198	53-16-51-051
96-420001-199	53-16-51-052
96-420001-200	53-16-51-053
96-420001-201	53-16-51
96-420001-203	53-16-51-004
96-420001-207	53-14-50-003
96-420001-207	53-32-01-014
96-420001-209	53-32-01
96-420001-209	53-14-50
96-420001-21	53-16-51-026
96-420001-217	53-16-51
96-420001-221	53-16-50
96-420001-225	53-14-01-008
96-420001-227	53-14-01-019
96-420001-229	53-16-51
96-420001-23	53-16-51-005
96-420001-233	53-14-50-004
96-420001-233	53-32-01-022
96-420001-25	53-16-51-006
96-420001-27	53-11-01-034
96-420001-28	53-11-01
96-420001-3	53-15-01
96-420001-3	53-14-50
96-420001-31	53-16-51-075
96-420001-33	53-16-51-076
96-420001-35	53-16-51-019
96-420001-38	53-14-50-014
96-420001-39	53-14-50-013
96-420001-41	53-14-50-008
96-420001-42	53-14-50-009
96-420001-43	53-14-50-005
96-420001-44	53-14-50
96-420001-49	53-16-50
96-420001-49	53-16-50
96-420001-49	53-16-51-071
96-420001-51	53-16-51-072
96-420001-51	53-16-50
96-420001-51	53-16-50
96-420001-53	53-16-51
96-420001-55	53-16-51-018
96-420001-57	53-16-50-082
96-420001-59	53-32-01
96-420001-601	53-11-01-050
96-420001-602	53-11-01
96-420001-603	53-16-51
96-420001-604	53-16-51
96-420001-605	53-16-51
96-420001-606	53-11-01-056
96-420001-61	53-14-50
96-420001-61	53-32-01
96-420001-65	53-32-01-012
96-420001-65	53-14-50-001
96-420001-67	53-32-01-028
96-420001-68	53-32-01-029
96-420001-681	53-16-51
96-420001-69	53-32-01-026
96-420001-70	53-32-01-027
96-420001-73	53-32-01
96-420001-75	53-32-01-019
96-420001-75	53-16-51-017
96-420001-77	53-14-50
96-420001-77	53-32-01
96-420001-79	53-32-01-020
96-420001-79	53-14-50-002
96-420001-83	53-16-50
96-420001-83	53-16-51-069
96-420001-85	53-16-51
96-420001-85	53-16-50
96-420001-87	53-16-50
96-420001-87	53-16-51
96-420001-87	53-32-01-017
96-420001-87	53-30-01-015
96-420001-89	53-30-01-018
96-420001-89	53-32-01-018
96-420001-89	53-16-51
96-420001-90	53-16-51
96-420001-90	53-32-01-024
96-420001-90	53-30-01-016
96-420001-91	53-16-51
96-420001-91	53-16-50
96-420001-93	53-16-50-083
96-420001-93	53-16-51-070
96-420001-95	53-16-51
96-420001-95	53-16-50
96-420001-97	53-16-51
96-420001-99	53-16-51-062
96-420010-1	53-20-01
96-420010-3	53-20-01-009
96-420011-1	52-20-01
96-420011-11	52-20-01
96-420011-11	56-10-01
96-420011-11	56-10-10
96-420011-12	56-10-10
96-420011-12	56-10-01
96-420011-12	52-20-01
96-420011-2	52-20-01
96-420011-3	56-10-10
96-420011-3	56-10-01
96-420011-7	56-10-01
96-420011-7	56-10-10
96-420015-16	53-15-01
96-420016-1	52-32-01-025
96-420016-101	52-32-01-021
96-420016-103	52-32-01-015
96-420016-104	52-32-01
96-420016-105	52-32-01-002
96-420016-11	52-32-01-020
96-420016-113	25-22-01-098
96-420016-113C	25-22-05-109
96-420016-115	25-22-01-065
96-420016-115C	25-22-05-113
96-420016-121	53-18-01
96-420016-125	52-32-01
96-420016-13	52-32-01-030
96-420016-135	52-32-01
96-420016-15	52-32-01-026
96-420016-159	52-32-01-006
96-420016-161	52-32-01-008
96-420016-163	52-32-01
96-420016-164	52-32-01
96-420016-165	52-32-01
96-420016-169	52-32-01
96-420016-17	52-32-01-029
96-420016-173	52-32-01
96-420016-173	53-32-01
96-420016-177	52-32-01-031
96-420016-195	52-32-01
96-420016-205	52-32-01
96-420016-21	52-32-01-012
96-420016-217	52-32-01-014
96-420016-25	52-32-01-019
96-420016-27	52-32-01-024
96-420016-29	52-32-01-013
96-420016-5	52-32-01-028
96-420016-53	52-32-01
96-420016-53	53-32-01
96-420016-54	52-32-01
96-420016-55	52-32-01-034
96-420016-56	52-32-01
96-420016-57	52-32-01
96-420016-59	52-32-01-007
96-420016-601	52-32-01
96-420016-605	52-32-01
96-420016-71	52-32-01-010
96-420016-73	52-32-01-011
96-420016-75	52-32-01
96-420016-89C	25-22-05-108
96-420016-89C	25-22-01-036
96-420016-9	52-32-01-027
96-420016-95	52-32-01-023
96-420016-97	52-32-01
96-420016-99	52-32-01-032
96-420017	53-14-50
96-420017-1	53-14-50
96-420017-3	53-14-50-020
96-420017-5	53-15-01-046
96-420017-6	53-15-01-051
96-420017-601	53-15-01
96-420017-602	53-15-01
96-420017-7	53-14-50
96-420018	11-30-01
96-420029-1	56-10-10-001
96-420029-3	56-10-10
96-420030-1	56-10-10
96-420030-3	56-10-10
96-420031-1	53-16-51-027
96-420031-2	53-16-51
96-420033-1	52-10-02
96-420033-11	52-10-02-068
96-420033-13	52-10-02-072
96-420033-15	52-10-02-065
96-420033-23	52-10-02-062

PART NUMBER	CHAP/SUB-SECT/UNIT & ITEM	PART NUMBER	CHAP/SUB-SECT/UNIT & ITEM	PART NUMBER	CHAP/SUB-SECT/UNIT & ITEM
96-420033-25	52-10-02-064	96-440000-104	53-18-01	96-440001-57	53-32-01
96-420033-27	52-10-02-063	96-440000-105	53-18-01-105	96-440001-59	53-32-01-037
96-420033-3	52-10-02	96-440000-106	53-18-01	96-440001-59	53-30-01-037
96-420033-33	52-10-02-074	96-440000-107	53-18-01-101	96-440001-61	53-30-01-041
96-420033-5	52-10-02-073	96-440000-109	53-18-01-106	96-440001-61	53-32-01-033
96-420033-601	52-10-02-075	96-440000-111	53-18-01-072	96-440001-62	53-32-01-036
96-420054	53-16-50	96-440000-113	53-18-01-107	96-440001-62	53-30-01-042
96-420054	53-16-51-003	96-440000-115	53-18-01-063	96-440001-63	53-18-01-122
96-420069	53-17-50	96-440000-119	53-18-01-065	96-440001-64	53-18-01
96-420070	53-17-50	96-440000-121	53-18-01-064	96-440001-65	53-18-01
96-420071	53-17-50	96-440000-123	53-18-01-020	96-440001-66	53-18-01
96-420072	53-17-50	96-440000-127	53-18-01-059	96-440001-67	53-18-01
96-420105-1	56-10-10	96-440000-129	53-18-01-060	96-440001-69	53-18-01-053
96-420105-3	56-10-10-029	96-440000-131	53-18-01-061	96-440001-77	53-18-01
96-420105-5	56-10-10-030	96-440000-133	53-18-01	96-440001-79	53-18-01
96-420123-1	53-15-01	96-440000-137	53-18-01-127	96-440001-81	53-18-01
96-420123-3	53-15-01-054	96-440000-138	53-18-01	96-440001-83	53-16-51
96-420123-5	53-15-01	96-440000-139	53-18-01-089	96-440001-83	53-18-01
96-420125	53-20-01	96-440000-147	53-18-01	96-440001-85	53-32-01-035
96-420131-1	53-16-51-025	96-440000-149	53-18-01	96-440001-86	53-32-01-038
96-420132-1	53-16-51	96-440000-153	53-30-01	96-440001-87	53-18-01-128
96-420132-3	53-16-51	96-440000-23	53-30-01-038	96-440001-88	53-18-01
96-420133-1	53-14-01-009	96-440000-24	53-30-01-039	96-440010	53-52-01
96-420134-1	53-16-51	96-440000-25	53-18-01	96-440010-1	53-52-01-001
96-420135-3	53-16-51	96-440000-27	53-18-01-102	96-440010-11	53-52-01-005
96-430010	56-20-01	96-440000-29	53-18-01-103	96-440010-11	53-52-02-001
96-430010-11	56-20-01-010	96-440000-3	53-18-01-037	96-440010-11	53-52-03-001
96-430010-12	56-20-01	96-440000-30	53-18-01	96-440010-12	53-52-03
96-430010-15	56-20-01-003	96-440000-31	53-18-01	96-440010-12	53-52-02
96-430010-16	56-20-01	96-440000-33	53-18-01-096	96-440010-12	53-52-01
96-430010-17	56-20-01-001	96-440000-34	53-18-01	96-440010-17	53-52-01-004
96-430010-18	56-20-01	96-440000-39	53-18-01	96-440010-17	53-52-02-002
96-430010-21	56-20-01-004	96-440000-5	53-18-01	96-440010-17	53-52-03-002
96-430010-22	56-20-01	96-440000-51	53-30-01	96-440010-18	53-52-02
96-430010-27	56-20-01-005	96-440000-52	53-30-01	96-440010-18	53-52-01
96-430010-28	56-20-01	96-440000-53	53-30-01-035	96-440010-18	53-52-03
96-430010-3	56-20-01-006	96-440000-53	53-32-01-032	96-440010-19	53-52-01-003
96-430010-31	56-20-01-002	96-440000-69	53-18-01	96-440010-19	53-52-02-003
96-430010-35	56-20-01-008	96-440000-71	53-18-01	96-440010-603	53-52-01
96-430010-37	56-20-01	96-440000-73	53-18-01	96-440010-7	53-52-02-004
96-430010-37	53-18-01-125	96-440000-77	53-18-01-058	96-440010-7	53-52-01-002
96-430010-38	53-18-01	96-440000-79	53-18-01-057	96-440010-7	53-52-03-004
96-430010-38	56-20-01	96-440000-81	53-18-01-056	96-440011-11	53-51-01
96-430010-4	56-20-01	96-440000-83	53-18-01	96-440011-15	53-51-01
96-430010-47	56-20-01	96-440000-85	53-18-01-073	96-440011-5	53-51-01-002
96-430010-47	53-18-01	96-440000-9	53-18-01	96-440011-601	53-51-01
96-430010-5	56-20-01	96-440000-95	53-18-01-069	96-440011-605	53-51-01
96-430010-51	56-20-01-009	96-440000-97	53-18-01-070	96-440011-607	53-51-01
96-430010-53	56-20-01-007	96-440000-99	53-18-01-071	96-440011-9	53-51-01-001
96-430010-67	56-20-01	96-440001	53-18-01	96-440012-1	53-32-01
96-430010-69	56-20-01	96-440001-13	53-18-01	96-440012-1	53-30-01-048
96-430010-71	56-20-01	96-440001-15	53-18-01	96-440012-1	36-10-10-023
96-430010-71	25-23-01	96-440001-15	53-16-51-074	96-440012-1	34-10-10-001
96-430010-72	25-23-01	96-440001-161	53-18-01-132	96-440012-1	34-10-01-035
96-430010-72	56-20-01	96-440001-163	53-32-01-034	96-440014	34-10-01
96-430010-73	56-20-01	96-440001-163	53-30-01-036	96-440014	53-30-01
96-430010-75	56-20-01	96-440001-169	53-18-01-109	96-440015	53-52-02
96-430010-77	56-20-01	96-440001-17	53-16-51-073	96-440015-11	53-52-02
96-430010-79	56-20-01	96-440001-17	53-18-01	96-440015-13	53-52-02-008
96-430010-81	56-20-01	96-440001-170	53-18-01	96-440015-13	53-16-50-084
96-430010-89	56-20-01	96-440001-19	53-20-01-023	96-440015-13	21-22-10-052
96-430011-17	52-30-01-010	96-440001-21	25-22-01-084	96-440015-13	21-22-50-019
96-430011-21	52-30-01-013	96-440001-25	53-18-01	96-440015-13	21-22-20-060
96-430011-23	52-30-01-012	96-440001-27	53-18-01	96-440015-15	53-52-02
96-430011-25	52-30-01-011	96-440001-29	53-18-01	96-440015-17	53-52-02
96-430011-27	52-30-01	96-440001-33	53-18-01-052	96-440015-17	21-22-20-049
96-430011-29	52-30-01-014	96-440001-35	53-18-01	96-440015-17	21-22-10-041
96-440000	53-18-01	96-440001-41	53-18-01-051	96-440015-19	21-22-10-053
96-440000-1	53-18-01-094	96-440001-43	53-18-01-120	96-440015-19	21-22-20-061
96-440000-1	53-30-01-040	96-440001-44	53-18-01	96-440015-19	53-52-02-009
96-440000-101	53-18-01	96-440001-5	53-18-01	96-440015-21	53-52-02-010
96-440000-103	53-18-01-104	96-440001-57	53-30-01	96-440015-21	21-22-20-051

PART NUMBER	CHAP/SUB-SECT/UNIT & ITEM
96-440015-21	21-22-10-043
96-440015-23	21-22-10-040
96-440015-23	21-22-20-048
96-440015-23	53-52-02-012
96-440015-27	53-52-02
96-440015-27	21-22-20-052
96-440015-27	21-22-10-044
96-440015-28	53-52-02
96-440015-29	21-22-10-045
96-440015-29	21-22-20-053
96-440015-31	21-22-20-054
96-440015-31	21-22-10-046
96-440015-31	53-52-02-011
96-440015-37	53-52-02-013
96-440015-37	21-22-10-042
96-440015-37	21-22-20-050
96-440015-39	53-52-02
96-440015-39	53-52-03-003
96-440015-41	53-52-03
96-440015-43	53-52-03
96-440015-45	53-52-02-005
96-440015-45	53-52-03-005
96-440015-5	53-52-02
96-440015-51	53-52-03
96-440015-603	21-22-20
96-440015-603	21-22-10
96-440015-607	53-52-02
96-440015-61	53-52-02
96-440015-618	53-52-03
96-440015-63	53-52-02
96-440015-63	53-52-03
96-440015-7	53-52-02-006
96-440015-7	53-52-03-006
96-440015-9	53-52-03-007
96-440015-9	53-52-02-007
96-440015-9	21-22-50-017
96-440022-1	53-18-01-054
96-440022-2	53-18-01-025
96-440024-1	53-18-01
96-440024-2	53-18-01
96-500005-7	39-14-40
96-500006-3	39-14-40
96-500009-87	39-14-50
96-500018-5	11-30-01-065
96-500020-23	30-10-10-031
96-500022-15	30-10-10-059
96-500022-21	30-10-10-063
96-500022-31	30-10-10
96-500022-35	30-10-10-058
96-500024-15	39-14-40
96-500028	30-10-20-042
96-500039-11	39-14-50
96-500042-3	39-14-40
96-520011	57-50-10-040
96-520012-1	57-50-10
96-520012-13	27-30-11-017
96-520012-3	57-50-10-039
96-520012-5	27-10-01
96-520012-7	27-10-01-070
96-520013-13	57-50-10
96-524000	27-10-01
96-524000	27-20-01
96-524000	27-30-01
96-524000-11	27-30-01-037
96-524000-13	27-20-10-025
96-524000-13	27-20-01
96-524000-15	27-20-01
96-524000-15	27-20-10-026
96-524000-25	27-30-01
96-524000-25	27-30-30
96-524000-27	27-30-01-038
96-524000-29	27-20-01-017
96-524000-31	27-20-01-034
96-524000-31	27-20-10-022
96-524000-33	27-30-01
96-524000-33	27-20-01
96-524000-33	27-10-01
96-524000-35	27-30-01
96-524000-5	27-20-10
96-524000-5	27-20-01-031
96-524000-7	27-30-01-033
96-524000-7	27-30-11
96-524000-7	55-10-01
96-524000-7	55-11-01-070
96-524000-9	55-11-01
96-524000-9	55-10-01-059
96-524000-9	27-30-11
96-524000-9	27-30-01-036
96-524010	27-20-20
96-524010-1	27-20-20-073
96-524011	27-10-20
96-524011-601	39-10-30
96-524012-1	53-18-01-045
96-524012-11	53-18-01-041
96-524012-13	53-18-01-049
96-524012-15	53-18-01-050
96-524012-17	53-18-01-043
96-524012-19	53-18-01-044
96-524012-3	53-18-01-046
96-524012-5	53-18-01-047
96-524012-7	53-18-01-048
96-524012-9	53-18-01-040
96-524013	55-00-02
96-524013	55-00-01
96-524013	27-20-01
96-524013-1	27-20-01-019
96-524014	27-20-15-015
96-524014	11-30-01-035
96-524014	11-30-10-044
96-524017-23	27-10-20-074
96-524017-27	27-10-20-072
96-524017-601	27-10-20
96-524017-601	27-10-01-031
96-524018-7	27-20-20-029
96-524021-1	27-30-01-060
96-524021-1	53-11-01
96-524021-3	53-11-01-058
96-524021-3	27-30-01-059
96-524021-5	27-30-01-055
96-524026-1	27-20-20
96-524026-1	53-11-01
96-524026-2	53-11-01
96-524026-2	27-20-20
96-524029-21	27-10-20-015
96-524029-23	27-10-20
96-524030	27-50-20-012
96-524031	27-30-30
96-524031-1	27-30-30-001
96-524031-11	27-30-30-022
96-524031-13	27-30-30
96-524031-15	27-30-30
96-524031-17	27-30-30
96-524031-3	27-30-30-003
96-524031-31	27-30-30
96-524031-35	27-30-30
96-524031-5	27-30-30-002
96-524031-7	27-30-30
96-524031-9	27-30-30-023
96-524032	27-30-11
96-524033	27-30-30-019
96-524034-601	27-30-20
96-524035	27-30-20
96-524035	11-30-10-039
96-526000	27-20-10
96-526000-11	27-20-10-015
96-526000-13	27-20-10
96-526000-15	27-20-10-020
96-526000-17	27-20-10
96-526000-19	27-20-10-027
96-526000-19	55-40-01
96-526000-29	27-20-10
96-526000-3	27-20-10-006
96-526000-5	27-20-10-008
96-526000-601	27-20-10
96-526000-601	55-40-01
96-526000-7	27-20-10-009
96-526000-9	27-20-10-010
96-526011	27-10-01-069
96-526012	27-10-01-067
96-526012	57-50-10-041
96-526013-1	27-30-11
96-526013-2	27-30-11
96-526013-3	27-30-11
96-526013-4	27-30-11
96-526013-601	27-30-11
96-526013-601	55-11-01
96-526013-602	55-11-01
96-526013-602	27-30-11
96-526013-603	27-30-11
96-526013-604	27-30-11
96-526013-605	27-30-11
96-526013-606	27-30-11
96-526013-607	27-30-11
96-526013-608	27-30-11
96-526013-611	27-30-11
96-526013-611	55-10-01
96-526013-612	55-10-01
96-526013-612	27-30-11
96-526013-613	27-30-11
96-526013-613	55-10-01
96-526013-614	55-10-01
96-526013-614	27-30-11
96-526014-13	27-30-11
96-526014-14	27-30-11
96-526014-15	27-30-11
96-526014-16	27-30-11
96-526015	27-30-11
96-526015-1	27-30-11-010
96-526016-1	27-30-11
96-526016-2	27-30-11-009
96-526017-10	27-30-11
96-526017-5	27-30-11
96-526017-6	27-30-11-015
96-526017-9	27-30-11
96-526018	27-30-11
96-526018-1	27-30-11-005
96-526019	27-30-11
96-526019-13	27-30-11
96-526019-5	27-30-11
96-526021-1	27-30-11
96-530001-1	25-22-02
96-530001-105	25-22-03
96-530001-105	25-22-02
96-530001-105	53-16-50
96-530001-107	25-22-02-005
96-530001-11	25-22-03
96-530001-11	25-22-02-021
96-530001-111	25-22-03
96-530001-111	25-22-02-004
96-530001-113	25-22-03
96-530001-115	25-22-03
96-530001-115	25-22-02-003
96-530001-117	25-22-03-043
96-530001-127	25-22-03-003
96-530001-127	25-22-02-006
96-530001-129	25-22-02-007

PART NUMBER	CHAP/SUB-SECT/UNIT & ITEM
96-530001-129	25-22-03
96-530001-13	25-22-03
96-530001-13	25-22-02-022
96-530001-137	25-22-02-013
96-530001-147	25-22-03-034
96-530001-15	25-22-02-030
96-530001-153	25-22-02-023
96-530001-155	52-10-01
96-530001-157	25-22-02
96-530001-159	25-22-02-029
96-530001-159	25-22-03-010
96-530001-16	25-22-02
96-530001-163	25-22-02-037
96-530001-167	25-22-02-035
96-530001-171	25-22-02-066
96-530001-171	25-22-03
96-530001-171	25-22-03
96-530001-173	25-22-03
96-530001-175	25-22-02-067
96-530001-175	25-22-03
96-530001-177	25-22-03-014
96-530001-179	25-22-02-068
96-530001-183	25-22-02-069
96-530001-187	25-22-02-070
96-530001-19	25-22-02-026
96-530001-191	25-22-02-071
96-530001-195	25-22-02-072
96-530001-209	25-22-02-083
96-530001-209	25-22-03-015
96-530001-209C	25-22-05-057
96-530001-209C	25-22-01-034
96-530001-213	52-10-01
96-530001-219	25-22-01-055
96-530001-219	25-22-02-017
96-530001-219	25-22-05-026
96-530001-219	25-22-03
96-530001-220	25-22-03
96-530001-220	25-22-02-044
96-530001-220	25-22-05-075
96-530001-220	25-22-01-056
96-530001-221	25-22-01-054
96-530001-221	25-22-05-074
96-530001-221	25-22-05-025
96-530001-221	25-22-02-045
96-530001-221	25-22-03-006
96-530001-223	25-28-01-003
96-530001-227	25-22-02-043
96-530001-229	25-22-02-014
96-530001-23	25-22-02-018
96-530001-233	25-22-02-015
96-530001-233	25-22-03-004
96-530001-235	25-22-03-009
96-530001-235	25-22-02-025
96-530001-25	25-22-03-007
96-530001-25	25-22-02-019
96-530001-27	25-22-03
96-530001-27	25-22-02-020
96-530001-29	25-22-02-036
96-530001-29	25-22-03
96-530001-31	25-22-03-012
96-530001-31	25-22-02-001
96-530001-33	25-22-03
96-530001-33	25-22-02-065
96-530001-35	25-22-03-013
96-530001-37	25-22-02-064
96-530001-37	25-22-03
96-530001-37	25-22-03
96-530001-39	25-22-03
96-530001-41	25-22-02-056
96-530001-41	25-22-03
96-530001-43	25-22-03
96-530001-43	25-22-02-057
96-530001-45	25-22-02-055
96-530001-51	25-22-03
96-530001-51	25-22-02-076
96-530001-53	25-22-03
96-530001-57	25-22-02-086
96-530001-601	25-22-03
96-530001-603	25-22-03-016
96-530001-603	25-22-02
96-530001-604	25-22-02
96-530001-61	25-22-02-059
96-530001-610	25-13-01
96-530001-611	25-13-01
96-530001-612	25-22-02
96-530001-615	25-23-01-038
96-530001-616	25-28-01
96-530001-617	25-22-02
96-530001-621	25-23-01
96-530001-622	25-23-01-080
96-530001-625	25-22-02
96-530001-634	25-13-01
96-530001-635	25-13-01
96-530001-636	25-20-01
96-530001-637	25-20-01
96-530001-65	25-22-02-053
96-530001-67	25-22-02-052
96-530001-67	25-22-03
96-530001-69	25-22-03
96-530001-69	25-22-02-054
96-530001-695	25-22-02
96-530001-696	25-22-02
96-530001-7	25-22-02-033
96-530001-7	25-22-03
96-530001-71	25-22-03
96-530001-71	25-22-02-060
96-530001-75	52-10-01-064
96-530001-77	52-10-02-059
96-530001-77	52-10-01-065
96-530001-77	25-22-05-066
96-530001-77	25-22-01-051
96-530001-79	25-22-02-051
96-530001-79	25-22-03
96-530001-81	25-22-02-074
96-530001-85	25-22-03
96-530001-85	25-22-02-050
96-530001-87	25-22-02-063
96-530001-87	25-22-03
96-530001-89	25-22-03-017
96-530001-9	25-22-03-011
96-530001-95	25-13-01-021
96-530001-99	25-13-01-022
96-530002-1	25-22-03
96-530002-1	25-28-10
96-530002-101	25-22-03
96-530002-103	25-22-03-021
96-530002-105	25-22-01-035
96-530002-11	25-22-03
96-530002-11	25-22-03
96-530002-123	25-22-03
96-530002-125	25-22-03
96-530002-13	25-22-03-029
96-530002-131	25-22-03
96-530002-135	25-22-03
96-530002-15	25-22-03
96-530002-17	25-22-03
96-530002-17	25-22-03
96-530002-19	25-22-03-028
96-530002-21	25-22-03
96-530002-27	25-22-03
96-530002-29	25-22-03
96-530002-3	25-22-03
96-530002-3	25-28-10
96-530002-31	25-22-03
96-530002-33	25-22-03
96-530002-35	25-22-03
96-530002-39	25-22-03-027
96-530002-41	25-22-03
96-530002-43	25-22-03
96-530002-45	25-22-03
96-530002-47	25-22-03-026
96-530002-49	25-22-03
96-530002-5	25-22-03-031
96-530002-51	25-22-05-022
96-530002-53	25-22-03
96-530002-55 C	25-28-10
96-530002-55C	25-22-01-104
96-530002-57	25-22-03
96-530002-59	25-22-03
96-530002-605	25-22-03
96-530002-61	25-22-03-046
96-530002-63	25-22-03-049
96-530002-635	25-23-01
96-530002-636	25-22-03-045
96-530002-636	25-22-03
96-530002-641	25-22-03
96-530002-65	25-22-03-050
96-530002-652	25-23-01
96-530002-665	25-23-01-096
96-530002-67	25-22-05
96-530002-67	25-22-03
96-530002-67	25-22-01-008
96-530002-69	25-22-01-009
96-530002-69	25-22-03
96-530002-69	25-22-05-089
96-530002-69	52-10-01-066
96-530002-69	52-10-02-061
96-530002-7	25-22-03-030
96-530002-73	25-22-03
96-530002-75	25-22-03-036
96-530002-75	25-22-01-086
96-530002-77	25-22-03
96-530002-79	25-22-03-038
96-530002-79	25-22-01-087
96-530002-81	25-22-03
96-530002-83	25-28-20-011
96-530002-83 C	25-28-10
96-530002-83C	25-22-01
96-530002-85 C	25-28-10
96-530002-9	25-22-03
96-530002-95	25-22-03
96-530002-97	25-22-03
96-530004-1	25-22-01
96-530004-1	25-28-10
96-530004-103	25-22-05
96-530004-107	25-22-05-007
96-530004-107	25-22-01-027
96-530004-111	25-22-01-028
96-530004-111	25-22-05-009
96-530004-115	25-22-05-008
96-530004-115	25-22-01-029
96-530004-115	25-22-01-068
96-530004-115	25-28-10-014
96-530004-119	25-22-01-030
96-530004-119	25-22-05-053
96-530004-123	25-22-05-054
96-530004-123	25-22-01-031
96-530004-127	25-22-01-032
96-530004-127	25-22-05-055
96-530004-131	25-22-05-056
96-530004-131	25-22-01-033
96-530004-137	25-22-01-043
96-530004-137	25-22-05-015
96-530004-139	25-22-05-017
96-530004-139	25-22-01-044
96-530004-141	25-22-01-045

PART NUMBER	CHAP/SUB-SECT/UNIT & ITEM	PART NUMBER	CHAP/SUB-SECT/UNIT & ITEM	PART NUMBER	CHAP/SUB-SECT/UNIT & ITEM
96-530004-141	25-22-05-019	96-530006-101	25-22-05-111	96-530007-173	25-22-07-033
96-530004-143	25-22-05-016	96-530006-103	25-28-10	96-530007-181	25-22-07-007
96-530004-143	25-22-01-039	96-530006-105	25-28-10	96-530007-185	25-22-07-071
96-530004-145	25-22-01-046	96-530006-107	25-28-10	96-530007-191	25-22-07-063
96-530004-145	25-22-05-065	96-530006-109	25-22-05-099	96-530007-193	25-22-07-062
96-530004-147	25-22-05-064	96-530006-11	25-22-05	96-530007-195	25-22-07-066
96-530004-147	25-22-01-047	96-530006-111	25-22-05-098	96-530007-199	25-22-07-069
96-530004-149	25-22-01-048	96-530006-113	25-22-05	96-530007-201	25-22-07-064
96-530004-149	25-22-05-063	96-530006-115	25-22-05	96-530007-207	25-22-07-070
96-530004-151	25-22-05-070	96-530006-117	25-22-05-097	96-530007-209	25-22-07-068
96-530004-151	25-22-01-049	96-530006-125	25-22-05-010	96-530007-211	25-22-07-067
96-530004-153	25-22-01-042	96-530006-127	25-22-05	96-530007-213	25-22-07-065
96-530004-153	25-22-05-061	96-530006-129	25-22-05	96-530007-215	25-28-20-004
96-530004-155	25-22-05-062	96-530006-13 C	25-28-10-011	96-530007-217	25-28-20-006
96-530004-155	25-22-01-050	96-530006-131	25-22-05-005	96-530007-219	25-28-20-008
96-530004-157	25-22-01-041	96-530006-133	25-22-05	96-530007-221	25-28-20-010
96-530004-157	25-22-05-104	96-530006-135	25-22-05	96-530007-223	25-22-07
96-530004-159	25-22-01-040	96-530006-141	25-22-05-013A	96-530007-225	25-22-07-044
96-530004-165 C	25-28-10-001	96-530006-15 C	25-28-10-012	96-530007-229	25-22-07
96-530004-171	25-22-05-091	96-530006-17	25-22-05	96-530007-229	25-28-20-003
96-530004-175	25-22-05-092	96-530006-19	25-22-05-003	96-530007-229	53-16-51
96-530004-177	25-22-05-093	96-530006-23	25-22-05-011	96-530007-23	25-22-07-016
96-530004-187	25-22-05-095	96-530006-25	25-22-05	96-530007-231	25-28-20-001
96-530004-189	25-22-05-103	96-530006-27	25-22-05	96-530007-232	25-28-20
96-530004-195	25-28-10	96-530006-29	25-22-05-004	96-530007-233	25-22-07
96-530004-197	25-22-01	96-530006-3	25-22-05	96-530007-235	25-22-07
96-530004-197 C	25-28-10-013	96-530006-3	25-28-10	96-530007-237	25-28-20-017
96-530004-199	52-10-02	96-530006-33	25-22-05-069	96-530007-258	25-22-07-031
96-530004-199	53-16-50-047	96-530006-35	25-22-05-042	96-530007-259	25-28-20-018
96-530004-199	53-16-51	96-530006-39	25-22-05-041	96-530007-261	25-22-07-022
96-530004-3	25-28-10	96-530006-41	25-22-05	96-530007-29	25-22-07-002
96-530004-3	25-22-01	96-530006-43	25-22-05	96-530007-293	25-22-07-052
96-530004-33	25-22-01-004	96-530006-45	25-22-05-043	96-530007-295	25-22-07-015
96-530004-35	25-22-01-005	96-530006-49	25-22-05-049	96-530007-297	25-28-20-002
96-530004-37	25-22-01-006	96-530006-5	25-22-05-001	96-530007-301	25-22-07
96-530004-39	25-22-01-007	96-530006-55	25-22-05-047	96-530007-301	25-28-20
96-530004-41	25-22-01-024	96-530006-59	25-22-05-046	96-530007-303	25-22-07
96-530004-45	25-22-01-037	96-530006-63	25-22-05-068	96-530007-303	25-28-20
96-530004-45	25-22-05-060	96-530006-65	25-22-05-045	96-530007-33	25-22-07-005
96-530004-47	25-22-05-014	96-530006-67	25-22-05	96-530007-35	25-22-07-015A
96-530004-47	25-22-01-038	96-530006-69	25-22-05	96-530007-39	25-22-07-006
96-530004-49 C	25-22-01-015	96-530006-69	25-22-05-112	96-530007-41	25-22-07-008
96-530004-49C	25-22-05-006	96-530006-71	25-22-05-044	96-530007-45	25-22-07-012
96-530004-5C	25-22-01-001	96-530006-73	25-22-05	96-530007-47	25-22-07-004
96-530004-53	25-22-01-017	96-530006-77	25-22-05-088	96-530007-51	25-22-07-003
96-530004-54	25-22-01-018	96-530006-81	25-22-05-102	96-530007-57	25-22-07-010
96-530004-57	25-22-01-019	96-530006-85	25-22-05-110	96-530007-61	25-22-07-009
96-530004-57	25-22-01-016	96-530006-87	25-22-05-105	96-530007-65	25-22-07-024
96-530004-57	25-22-05-052	96-530006-9	25-22-05-002	96-530007-69	25-22-07-021
96-530004-59C	25-22-05-051	96-530006-91	25-22-05-106	96-530007-73	25-22-07-023
96-530004-59C	25-22-01-020	96-530006-97	25-22-05-107	96-530007-75	25-22-07-048
96-530004-601	25-22-01	96-530007-101	25-22-07-059	96-530007-77	25-22-07-047
96-530004-602	25-22-01	96-530007-107	25-22-07-054	96-530007-79	25-22-07-053
96-530004-61	25-22-01-021	96-530007-11	25-22-07	96-530007-81	25-22-07-057
96-530004-61	25-22-05-059	96-530007-115	52-32-01-035	96-530007-85	25-22-07-046
96-530004-63	25-22-05-058	96-530007-117	25-22-07-058	96-530007-87	25-22-07-045
96-530004-63	25-22-01-013	96-530007-119	25-22-07-056	96-530007-9	25-22-07
96-530004-65	25-22-01-014	96-530007-123	25-22-07-043	96-530007-9	25-28-20
96-530004-67	25-22-01-010	96-530007-133	25-22-07-041	96-530007-91	25-22-07-050
96-530004-69	25-22-01-011	96-530007-135	25-22-07-001	96-530007-93	25-22-07-055
96-530004-7	25-22-01-002	96-530007-139	25-22-07-036	96-530007-99	25-22-07-060
96-530004-71	25-22-01-012	96-530007-143	25-22-07-037	96-530007-99	52-30-01
96-530004-77	25-22-01-025	96-530007-147	25-22-07-038	96-530011-1	25-22-03
96-530004-77	25-22-05-094	96-530007-15	25-22-07-019	96-530011-601 C	25-22-02-038
96-530004-81	25-22-05-100	96-530007-151	25-22-07-034A	96-530011-611 C	25-22-02-039
96-530004-81	25-22-01-023	96-530007-153	25-22-07-030	96-530011-623 C	25-22-02-078
96-530004-9	25-22-01-003	96-530007-159	25-22-07-029	96-530011-633 C	25-22-02-079
96-530005-13	25-22-05-013	96-530007-163	25-22-07-028	96-530011-643 C	25-22-02-080
96-530005-59	25-22-05-072	96-530007-165	25-22-07-040	96-530011-653 C	25-22-02-081
96-530005-63	25-22-05-067	96-530007-167	25-22-07-039	96-530012-601	25-20-01
96-530006-1	25-22-05	96-530007-169	25-22-07-035	96-530012-601	25-13-01
96-530006-1	25-28-10	96-530007-171	25-22-07-034	96-530012-602	25-13-01

PART NUMBER	CHAP/SUB-SECT/UNIT & ITEM
96-530012-602	25-20-01
96-530012-603	25-20-01
96-530012-603	25-13-01
96-530012-604	25-13-01
96-530012-604	25-20-01
96-530013-1	25-16-10
96-530013-11	25-16-10-001
96-530013-11	25-16-20-012
96-530013-11	25-22-01-071
96-530013-13	25-22-01-072
96-530013-13	25-16-20-011
96-530013-13	25-16-10-002
96-530013-17	25-16-10-004
96-530013-17	25-22-01-074
96-530013-21	25-22-01-075
96-530013-21	25-16-10-005
96-530013-35	25-16-10
96-530013-35	25-22-01
96-530013-37	25-22-01-081
96-530013-37	25-16-10-011
96-530013-45	25-16-10-012
96-530013-45	25-22-01-082
96-530013-5	25-16-10
96-530013-53	25-16-10
96-530013-53	25-22-01
96-530013-55	25-22-01
96-530013-55	25-16-10
96-530013-59	25-22-01-076
96-530013-59	25-16-10-006
96-530013-609	25-22-01
96-530013-73	25-22-01-073
96-530013-73	25-16-10-003
96-530015-1	25-22-01
96-530015-1	25-22-05
96-530015-11	25-22-05-116
96-530015-11	25-22-01-116
96-530015-12	25-22-01-117
96-530015-12	25-22-05
96-530015-13	25-22-05-117
96-530015-13	25-22-01-118
96-530015-17	25-22-01-119
96-530015-17	25-22-05-118
96-530015-21	25-22-05
96-530015-21	25-22-01
96-530015-25	25-22-01-120
96-530015-25	25-22-05-119
96-530015-27	25-22-05-120
96-530015-27	25-22-01-122
96-530015-3	25-22-01
96-530015-3	25-22-05
96-530015-35	25-22-05-122
96-530015-35	25-22-01-124
96-530015-36	25-22-01-125
96-530015-36	25-22-05
96-530015-41	25-22-05-123
96-530015-41	25-22-01-126
96-530015-42C	25-22-01-127
96-530015-42C	25-22-05
96-530015-43	25-22-05-121
96-530015-43	25-22-01-123
96-530015-5	25-22-01-114
96-530015-5	25-22-05-114
96-530015-9	25-22-05-115
96-530015-9	25-22-01-115
96-534010-601	25-21-01-010
96-534010-601	25-20-01-026
96-534010-601	25-13-01-023
96-534010-602	25-13-01
96-534010-602	25-20-01
96-534010-602	25-21-01
96-534010-603	25-21-01
96-534010-603	25-20-01
96-534010-603	25-13-01
96-534010-604	25-13-01
96-534010-604	25-20-01
96-534010-604	25-21-01
96-534011-5	25-22-03-008
96-534011-5	25-22-02-024
96-534011-5	25-50-01-007
96-534013-1	25-20-10
96-534013-17	25-20-10-049
96-534013-17	25-21-01-013
96-534013-17	25-21-10-012
96-534013-17	25-13-10-065
96-534013-19	25-13-10-064
96-534013-19	25-21-10-014
96-534013-19	25-21-01-014
96-534013-19	25-20-10-048
96-534013-2	25-20-10
96-534013-25	25-20-10
96-534013-25	25-21-20-018
96-534013-3	25-13-10
96-534013-4	25-13-10
96-534013-601	25-20-10
96-534013-602	25-20-10
96-534013-603	25-13-10
96-534014-1	25-20-10
96-534014-2	25-20-10
96-534014-23	25-13-10-050
96-534014-3	25-13-10
96-534014-35	25-20-10-033
96-534014-4	25-13-10
96-534014-47	25-20-10-039
96-534014-48	25-20-10
96-534014-55	25-13-10-043
96-534014-56	25-13-10-044
96-534014-63	25-13-10-056
96-534014-69	25-13-10-059
96-534014-69	25-20-10-044
96-534014-83	25-20-10
96-534014-85	25-20-10-041
96-534016-1	25-20-10-056
96-534016-1	25-13-10-069
96-534016-3	25-21-01
96-534017-33	25-23-01
96-534017-34	25-23-01
96-534020-1	25-23-01
96-534020-11	25-23-01
96-534020-3	25-23-01
96-534020-3	25-23-01-045
96-534020-5	25-23-01-020
96-534023	11-30-01
96-534024-23	25-22-01
96-534024-24	25-22-01
96-534024-25	25-22-01
96-534024-26	25-22-01
96-534024-27	25-22-01
96-534024-28	25-22-01
96-534024-28	25-22-01
96-534024-33C	25-22-01-093
96-534024-34C	25-22-01-094
96-534024-35	25-22-01
96-534024-37	25-22-01
96-534024-39	25-22-01
96-534024-45C	25-22-01-096
96-534024-57	25-22-01
96-534024-59	25-22-01
96-534024-605	25-22-01
96-534024-606	25-22-01
96-534024-607 C	25-22-03
96-534024-608 C	25-22-03
96-534024-609	25-22-03
96-534024-609	25-22-01
96-534024-61	25-22-01
96-534024-614	25-22-01
96-534024-65	25-22-01-097
96-534025-601	25-20-10-058
96-534025-602	25-20-10
96-534026	25-23-01-021
96-534027	25-20-10-057
96-534027	25-21-01-012
96-534027	25-13-10-070
96-534028	11-30-01
96-534028	25-22-03
96-534029	11-30-01-050
96-534038-23	25-21-10-018
96-534038-25	25-21-10-020
96-534038-7	25-21-10-004
96-534038-9	25-21-10-001
96-534039-11	25-21-10-011
96-534039-13	25-21-10-010
96-534039-17	25-21-10-017
96-534039-23	25-21-10-007
96-534039-23	25-21-20
96-534039-3	25-23-01-040
96-534039-3	25-23-01-041
96-534039-33	25-21-10-016
96-534039-5	25-21-10-015
96-534039-601	25-21-10
96-534039-9	25-21-10-013
96-534042	11-30-01-095
96-534042-3	11-30-10-013
96-534042-3	25-21-20-029
96-534043	11-20-01-028
96-534046	11-30-01-096
96-534046	25-22-03
96-534049-23	25-22-05-081
96-534049-23	25-22-01-090
96-534049-23	25-22-07-027
96-534049-23	25-50-01-005
96-534049-25	25-22-05-126
96-534049-39	25-22-01-026
96-534049-39	25-22-05-096
96-534049-41	25-22-01-128
96-534049-41	25-22-05-125
96-534049-43	25-22-05
96-534049-43	25-22-01-129
96-534050	11-30-01-097
96-534051-1	25-21-20
96-534051-13	25-21-20-001
96-534051-15	25-21-20-002
96-534051-25	25-21-20-009
96-534051-26	25-21-20
96-534051-27	25-21-20-010
96-534051-3	25-21-20
96-534051-33	25-21-10
96-534051-34	25-21-10
96-534051-34	25-21-20
96-534051-35	25-23-01-044
96-534051-37	25-23-01-042
96-534051-39	25-23-01
96-534051-41	25-21-20-021
96-534051-43	25-21-20-020
96-534051-45	25-21-20-015
96-534051-47	25-21-20-016
96-534051-48	25-21-20
96-534051-49	25-21-20
96-534051-5	25-21-20
96-534051-50	25-21-20
96-534051-59	25-21-10
96-534051-59	25-21-20-027
96-534051-603	25-21-20
96-534051-604	25-21-20
96-534051-608	25-21-20
96-534051-609	25-21-20
96-534051-61	25-21-20-030

PART NUMBER	CHAP/SUB-SECT/UNIT & ITEM	PART NUMBER	CHAP/SUB-SECT/UNIT & ITEM	PART NUMBER	CHAP/SUB-SECT/UNIT & ITEM
96-534051-65	25-21-20-026	96-534073-47	25-13-30	96-534080-3	25-22-05
96-534051-69	25-21-20	96-534073-49	25-13-30-043	96-534080-33	25-22-05
96-534051-7	25-21-20	96-534073-49	25-13-40-039	96-534080-35	25-22-05-031
96-534051-71	25-21-20	96-534073-49	25-13-20-052	96-534080-39	25-22-05
96-534051-72	25-21-20	96-534073-5	25-13-30	96-534080-41	25-22-05-032
96-534051-73	25-21-20	96-534073-5	25-13-40	96-534080-43	25-22-05
96-534051-75	25-21-20	96-534073-51	25-13-40-004	96-534080-5	25-22-05
96-534051-79	25-21-20	96-534073-51	25-13-20	96-534080-5	25-22-05
96-534051-81	25-21-20-003	96-534073-57	25-13-40-003	96-534080-7	25-22-05
96-534051-82	25-21-20	96-534073-7	25-13-40	96-534080-9	25-22-05
96-534051-83	25-21-20	96-534073-7	25-13-20	96-534080-9	25-22-05
96-534052	25-22-01-066	96-534073-7	25-13-30	96-534089	11-30-01
96-534058-1	25-22-03	96-534073-9	25-13-20	96-534090	11-30-01
96-534058-13	25-22-03	96-534073-9	25-13-40	96-534092	25-23-01
96-534058-15	25-22-03	96-534073-9	25-13-30	96-534092-1	25-23-01-059
96-534058-15	25-22-03	96-534073-9	25-20-20	96-534093-1	39-14-80-018
96-534058-3	25-22-03	96-534074-1	25-20-20	96-534095-5	35-00-24-011
96-534061	25-22-05	96-534074-11	25-20-20	96-534095-9	35-00-24
96-534061-21	25-22-05	96-534074-15	25-20-20-007	96-534096-1	25-22-07-032
96-534061-21	25-22-05-020	96-534074-19	25-20-20	96-534096-1	25-22-07-014
96-534061-21	25-22-01-051A	96-534074-21	25-20-20-011	96-534099-11	25-20-20
96-534061-22	25-22-01-051B	96-534074-23	25-20-20-003	96-534099-11	25-20-20
96-534061-22	25-22-05	96-534074-3	25-20-20	96-534099-17	25-13-30
96-534061-23	25-22-05-082	96-534074-43	25-20-20	96-534099-19	25-20-20
96-534061-24	25-22-05	96-534074-45	25-20-20	96-534099-19	25-20-20
96-534061-3	25-22-05-085	96-534075-13	25-16-20-007	96-534099-21	25-20-20
96-534061-3	25-22-01-111	96-534075-14	25-16-20	96-534099-21	25-20-20
96-534061-3	25-50-01	96-534075-15	25-16-20	96-534099-23	25-20-20
96-534061-7	25-22-01-113	96-534075-16	25-16-20	96-534099-23	25-13-30
96-534061-7	25-22-05-083	96-534075-17	25-16-20-010	96-534099-25	25-13-30
96-534061-8	25-22-05	96-534075-21	25-16-20	96-534099-25	25-20-20
96-534061-8	25-22-01-113A	96-534075-27	25-16-20-009	96-534099-25	25-20-20
96-534062	11-20-01	96-534075-33	25-16-20-001	96-534099-26	25-20-20
96-534067	11-30-10-008	96-534075-33	25-16-30-007	96-534099-27	25-13-30-057
96-534068	11-30-10-009	96-534075-35	25-16-30-008	96-534099-29	25-13-30
96-534068	11-20-01	96-534075-35	25-16-20-002	96-534099-29	25-20-20
96-534068-1	11-20-10	96-534075-36	25-16-20	96-534099-29	25-20-20
96-534071-1	25-13-20	96-534075-36	25-16-30	96-534099-3	25-13-30
96-534071-1	25-20-20	96-534075-5	25-16-20	96-534099-30	25-20-20
96-534071-5	25-20-20	96-534075-53	25-16-20-004	96-534099-31	25-20-20
96-534071-5	25-20-20	96-534075-63	25-16-20-005	96-534099-31	25-13-30-054
96-534071-5	25-13-30	96-534075-7	25-16-20-006	96-534099-33	25-13-30-053
96-534071-51	25-13-30-004	96-534075-71	25-16-20	96-534099-35	25-13-30-059
96-534072-1	25-13-20	96-534075-73	25-16-20	96-534099-35	25-20-20-034
96-534072-11	25-13-20-066	96-534075-75	25-16-20	96-534099-45	25-20-20
96-534072-11	25-20-20	96-534075-77	25-16-20	96-534099-45	25-13-30-055
96-534072-15	25-20-20	96-534078-3	25-22-05	96-534099-601	25-13-30
96-534072-15	25-13-20-065	96-534078-7	25-22-05	96-534099-7	25-20-20
96-534072-3	25-13-20	96-534078-9	25-22-05	96-534099-7	25-20-20
96-534072-5	25-20-20	96-534078-9	52-10-02-058	96-534100-7	52-10-02-060
96-534072-7	25-20-20	96-534079-1	25-22-05	96-534103	11-30-10-004
96-534073-1	25-13-20	96-534079-19	25-22-05	96-534103	25-22-07
96-534073-1	25-13-30	96-534079-21	25-22-05	96-534117	11-30-10-007
96-534073-1	25-13-40	96-534079-23	25-22-05-029	96-534120	25-22-07-011
96-534073-10	25-13-30	96-534079-3	25-22-05	96-534121	25-22-07-049
96-534073-10	25-13-40	96-534079-5	25-22-05-027	96-534122-1	25-22-07-013
96-534073-10	25-20-20	96-534079-7	25-22-05	96-534122-2	25-22-07-051
96-534073-13	25-13-20-007	96-534079-9	25-22-05-028	96-534125-1	25-28-20
96-534073-3	25-13-20	96-534080-1	25-22-05	96-534125-3	25-28-20
96-534073-3	25-13-30	96-534080-11	25-22-05	96-534125-5	25-28-20
96-534073-3	25-13-40	96-534080-13	25-22-05-036	96-534125-7	25-28-20
96-534073-31	25-13-20-049	96-534080-14	25-22-05-038	96-534125-9	25-28-20
96-534073-33	25-13-30-003	96-534080-15	25-22-05-033	96-534126-1	25-28-20
96-534073-33	25-13-20-006	96-534080-17	25-22-05	96-534126-3	25-28-20-009
96-534073-33	25-13-40	96-534080-19	25-22-05-039	96-550010-1	30-40-10-001
96-534073-43	25-13-40-040	96-534080-19	25-22-05-037	96-550012	21-40-01-075
96-534073-43	25-13-30-044	96-534080-2	25-22-05	96-550013-1	21-22-20
96-534073-43	25-13-20-053	96-534080-21	25-22-05-034	96-550013-1	21-22-10
96-534073-45	25-13-20-055	96-534080-23	25-22-05	96-550013-101	21-22-30
96-534073-45	25-13-30-046	96-534080-24	25-22-05	96-550013-103	21-22-30-034
96-534073-45	25-13-40-041	96-534080-25	25-22-05	96-550013-11	21-22-20
96-534073-47	25-13-40	96-534080-29	25-22-05	96-550013-117	21-22-20-032

PART NUMBER	CHAP/SUB-SECT/UNIT & ITEM	PART NUMBER	CHAP/SUB-SECT/UNIT & ITEM	PART NUMBER	CHAP/SUB-SECT/UNIT & ITEM
96-550013-125	21-22-30-039	96-550013-75	21-22-30-044	96-554022-5	25-16-20
96-550013-127	21-22-30-038	96-550013-75	21-22-10-024	96-554022-5	30-40-10
96-550013-129	21-22-30-040	96-550013-77	21-22-10-026	96-554022-7	25-16-20-013
96-550013-147	21-22-30-001	96-550013-77	21-22-20-034	96-554024	11-30-10-031
96-550013-147	21-22-20	96-550013-77	21-22-30-045	96-554024	39-14-60
96-550013-21	21-22-30-033	96-550013-79	21-22-10-002	96-554024-1	39-10-20-006
96-550013-21	21-22-10-029	96-550013-81	21-22-10	96-555013-17	53-52-03-011
96-550013-29	21-22-10-011	96-550013-83	21-22-20-021	96-555013-17	21-22-50-013
96-550013-29	21-22-20-010	96-550013-83	21-22-20	96-555013-19	21-22-50-008
96-550013-3	21-22-20	96-550013-83	21-22-30-014	96-555013-19	53-52-03-010
96-550013-31	21-22-10-012	96-550013-85	21-22-20-033A	96-555013-21	53-52-03
96-550013-31	21-22-20-011	96-550013-85	21-22-30	96-555013-23	21-22-50-009
96-550013-33	21-22-20-007	96-550013-85	21-22-10-025	96-555013-23	53-52-03-008
96-550013-33	21-22-30-020	96-550013-9	21-22-10	96-555013-25	53-52-03-009
96-550013-33	21-22-10-010	96-550013-9	21-22-20	96-555013-25	21-22-50-010
96-550013-35	21-22-10-006	96-550013-91	21-22-30-047	96-555013-29	21-22-50-012
96-550013-35	21-22-30-011	96-550013-91	21-22-20-036	96-555013-29	53-52-03
96-550013-35	21-22-20-026A	96-550013-91	21-22-10-028	96-555013-3	53-52-03
96-550013-37	21-22-20-027	96-550013-93	21-22-20-001	96-555013-3	21-22-50
96-550013-37	21-22-30-007	96-550013-95	21-22-20	96-555013-31	21-22-50-011
96-550013-37	21-22-10-007	96-550013-95	21-22-20	96-555013-31	53-52-03
96-550013-39	21-22-10-020	96-550013-95	21-22-30-013	96-555013-31	53-52-02
96-550013-39	21-22-30-010	96-550013-97	21-22-20-020	96-555013-33	21-22-50
96-550013-39	21-22-20-031	96-550013-99	21-22-30-048	96-555013-33	21-22-20
96-550013-43	21-22-20-012	96-550015	21-22-30	96-555013-35	21-22-50-014
96-550013-43	21-22-10-013	96-550015	21-22-10	96-555013-35	53-52-03-012
96-550013-45	21-22-10-015	96-550015-1	21-22-10	96-555013-37	53-52-03-014
96-550013-45	21-22-20-014	96-550015-1	21-22-20	96-555013-37	21-22-50-015
96-550013-47	21-22-20-013	96-550015-11	21-22-20-047	96-555013-9	21-22-50-007
96-550013-47	21-22-10-014	96-550015-11	21-22-30-027	96-555013-9	53-52-03
96-550013-49	21-22-10-021	96-550015-11	21-22-10-039	96-560000	35-00-05
96-550013-49	21-22-20-030	96-550015-13	21-22-10-034	96-560000	35-00-20
96-550013-49	21-22-30-019	96-550015-13	21-22-30-032	96-560000-1	35-00-20
96-550013-5	21-22-10	96-550015-13	21-22-20-042	96-560000-23	35-00-05
96-550013-5	21-22-20	96-550015-15	21-22-40	96-560000-3	35-00-05-001
96-550013-51	21-22-10-004	96-550015-17	21-22-20-040	96-560000-31	35-00-24
96-550013-51	21-22-30-016	96-550015-17	21-22-10-032	96-560000-4	35-00-05
96-550013-51	21-22-30-004	96-550015-19	21-22-10	96-560000-43	35-00-20-002
96-550013-51	21-22-20-006	96-550015-19	21-22-20	96-560000-47	35-00-20-004
96-550013-53	21-22-20-004	96-550015-21	21-22-20	96-560000-5	35-00-05-002
96-550013-53	21-22-30-006	96-550015-21	21-22-40-006	96-560000-51	35-00-20-008
96-550013-53	21-22-10-009	96-550015-21	21-22-10	96-560000-55	35-00-20-013
96-550013-55	21-22-30-043	96-550015-23	21-22-10	96-560000-59	35-00-20-017
96-550013-57	21-22-30-042	96-550015-23	21-22-20	96-560000-63	35-00-20-016
96-550013-58	21-22-30	96-550015-23	21-22-30-024	96-560000-67	35-00-20-026
96-550013-59	21-22-30-041	96-550015-29	21-22-40-007	96-560000-71	35-00-20-033
96-550013-60	21-22-30	96-550015-3	21-22-30-029	96-560000-73	35-00-20-020
96-550013-602	21-22-10	96-550015-3	21-22-20-045	96-560000-75	35-00-20-019
96-550013-603	21-22-10	96-550015-3	21-22-10-037	96-560000-77	35-00-20-012
96-550013-605	21-22-20	96-550015-601	21-22-20	96-560000-79	35-00-20-011
96-550013-606	21-22-20	96-550015-601	21-22-30	96-560001	35-00-20
96-550013-607	21-22-20	96-550015-9	21-22-30-030	96-560001	35-00-05
96-550013-608	21-22-20	96-550015-9	21-22-20-044	96-560001-1	35-00-20
96-550013-61	21-22-30-036	96-550015-9	21-22-10-036	96-560001-11	35-00-20-025
96-550013-610	21-22-20	96-550016-1	21-22-20	96-560001-11	35-00-21-041
96-550013-613	21-22-30	96-550016-1	21-22-30	96-560001-11	35-00-21-049
96-550013-615	21-22-30-046	96-550016-11	21-22-20	96-560001-11	35-00-22-063
96-550013-616	21-22-30	96-550016-3	21-22-20	96-560001-13	35-00-20-027
96-550013-62	21-22-30	96-550016-5	21-22-20	96-560001-15	35-00-20-037
96-550013-625	21-22-20	96-550016-5	21-22-30	96-560001-17	35-00-20-038
96-550013-626	21-22-20	96-550016-605	21-22-30	96-560001-19	35-00-20-035
96-550013-63	21-22-30-037	96-550016-7	21-22-20	96-560001-3	35-00-21-036
96-550013-641	21-22-30	96-550016-9	21-22-20	96-560001-3	35-00-21-044
96-550013-65	21-22-20	96-550016-9	21-22-30	96-560001-3	35-00-22-068
96-550013-65	21-22-10	96-554011	21-22-30-021	96-560001-31	35-00-21
96-550013-651	21-22-10-001	96-554011	21-22-20-028	96-560001-33	35-00-21
96-550013-67	21-22-10-023	96-554011	21-22-10-022	96-560001-35	35-00-21-004
96-550013-67	21-22-20-035	96-554013	21-22-10	96-560001-35	35-00-22-005
96-550013-69	21-22-20-015	96-554013	21-22-30-026	96-560001-37	35-00-22-027
96-550013-69	21-22-10-016	96-554013	21-22-20	96-560001-37	35-00-21-023
96-550013-7	21-22-20	96-554022	30-40-10	96-560001-39	35-00-21-007
96-550013-75	21-22-20-033	96-554022-3	25-16-20	96-560001-39	35-00-22-008

PART NUMBER	CHAP/SUB-SECT/UNIT & ITEM
96-560001-41	35-00-21-012
96-560001-45	35-00-21-022
96-560001-45	35-00-22-026
96-560001-47	35-00-22-056
96-560001-47	35-00-21-034
96-560001-49	35-00-05-007
96-560001-5	35-00-22
96-560001-5	35-00-21
96-560001-51	35-00-05-008
96-560001-53	35-00-05-006
96-560001-53	35-00-21-001
96-560001-59	35-00-21-050
96-560001-59	35-00-22-069
96-560001-61	35-00-22-067
96-560001-61	35-00-21
96-560001-65	35-00-21
96-560001-67	35-00-21
96-560001-69	35-00-21
96-560001-7	35-00-20-005
96-560001-71	35-00-21
96-560001-73	35-00-22-054
96-560001-75	35-00-21-002
96-560001-75	35-00-21-032
96-560001-77	35-00-21-017
96-560001-9	35-00-21-042
96-560001-9	35-00-20-014
96-560001-9	35-00-22
96-560002	35-00-01
96-560002-1	35-00-22
96-560002-11	35-00-22
96-560002-13	35-00-22
96-560002-13	35-00-01-017
96-560002-15	35-00-01
96-560002-17	35-00-01-015
96-560002-19	35-00-22-020
96-560002-19	35-00-21
96-560002-21	35-00-21
96-560002-21	35-00-22-013
96-560002-23	35-00-22-015
96-560002-23	35-00-21
96-560002-25	35-00-21
96-560002-29	35-00-01-018
96-560002-3	35-00-22
96-560002-31	35-00-01
96-560002-33	35-00-01
96-560002-33	35-00-22-001
96-560002-35	35-00-01-022
96-560002-5	35-00-22
96-560002-601	35-00-22
96-560002-7	35-00-22
96-560002-9	35-00-22
96-560004	35-00-01
96-560004-1	35-00-22
96-560004-11	35-00-22
96-560004-13	35-00-24-046
96-560004-13	35-00-23-021
96-560004-13	35-00-22
96-560004-15	35-00-22
96-560004-15	35-00-24-047
96-560004-17	35-00-22
96-560004-19	35-00-22
96-560004-21	35-00-22-066
96-560004-21	35-00-24-049
96-560004-23	35-00-22
96-560004-25	35-00-22-002
96-560004-3	35-00-22
96-560004-31	35-00-22
96-560004-31	35-00-23-020
96-560004-31	35-00-24
96-560004-31	35-00-24
96-560004-31	35-00-24-025
96-560004-5	35-00-22
96-560004-7	35-00-22
96-560004-9	35-00-22
96-560011-1	35-00-21-030
96-560011-1	35-00-22-052
96-560011-3	35-00-22-053
96-560011-3	35-00-21-031
96-560012	35-00-01
96-560012	11-30-10-020
96-560014	35-00-05
96-560021-1	35-00-22-037
96-560021-3	35-00-22-045
96-560021-5	35-00-22-040
96-560021-601	35-00-22
96-560022-13	35-00-23-018
96-590000	25-10-01
96-590001	25-10-01
96-590004	25-10-01
96-590007	23-60-01
96-590010	25-10-01
96-590010-13	25-10-01
96-590010-29B	25-10-01
96-590011	25-10-01
96-590011-25	25-10-01
96-590019-5	25-10-01-005
96-600000	55-00-01
96-600000-1	55-00-01-018
96-600000-1	55-00-02-018
96-600000-3	55-00-02-017
96-600000-3	55-00-01-017
96-600000-3	27-20-01-022
96-600000-5	55-00-01
96-600000-7	55-00-01
96-600001-1	55-00-02
96-610005-13	55-20-01-021
96-610005-14	55-20-01
96-610005-15	55-20-01-014
96-610005-16	55-20-01
96-610005-17	55-20-01-013
96-610005-18	55-20-01
96-610005-23	55-20-01
96-610005-25	55-20-01-019
96-610005-27	55-21-01-025
96-610005-37	55-20-01
96-610005-38	55-20-01
96-610005-42	55-20-01
96-610005-5	55-20-01-012
96-610005-6	55-20-01
96-610005-601	55-20-01
96-610005-601	55-00-01
96-610005-602	55-00-01
96-610005-602	55-20-01
96-610005-605	55-20-01
96-610005-605	55-00-01
96-610005-606	55-00-01
96-610005-606	55-20-01
96-610005-615	55-20-01
96-610005-615	55-00-01
96-610005-616	55-00-01
96-610005-616	55-20-01
96-610005-651	55-20-01
96-610005-651	55-20-01
96-610005-651	55-00-01
96-610005-651	55-00-01
96-610005-652	55-00-01
96-610005-652	55-00-01
96-610005-652	55-20-01
96-610005-652	55-20-01
96-610005-655	55-20-01
96-610005-655	55-00-01
96-610005-656	55-00-01
96-610005-656	55-20-01
96-610006-10	55-21-01
96-610006-11	55-21-01-039
96-610006-12	55-21-01
96-610006-13	55-21-01-023
96-610006-15	55-21-01-041
96-610006-17	55-21-01-040
96-610006-18	55-21-01
96-610006-23	55-21-01
96-610006-25	55-21-01
96-610006-29	55-21-01
96-610006-31	55-20-01
96-610006-32	55-20-01
96-610006-33	55-21-01-037
96-610006-35	55-21-01-042
96-610006-37	55-21-01-026
96-610006-39	55-21-01-043
96-610006-41	55-21-01
96-610006-41	55-20-01
96-610006-45	55-21-01-045
96-610006-47	55-21-01-004
96-610006-49	55-21-01
96-610006-53	55-21-01-027
96-610006-601	55-21-01
96-610006-601	55-00-02-004
96-610006-602	55-00-02
96-610006-602	55-21-01
96-610006-609	55-21-01
96-610006-609	55-00-02
96-610006-610	55-00-02
96-610006-610	55-21-01
96-610006-613	55-21-01
96-610006-613	55-00-02
96-610006-614	55-00-02
96-610006-614	55-21-01
96-610006-615	55-21-01
96-610006-615	55-00-02
96-610006-616	55-00-02
96-610006-616	55-21-01
96-610006-651	55-21-01
96-610006-651	55-00-02
96-610006-652	55-00-02
96-610006-652	55-21-01
96-610006-655	55-21-01
96-610006-655	55-00-02
96-610006-656	55-00-02
96-610006-656	55-21-01
96-610006-67	55-21-01
96-610006-68	55-21-01
96-610006-69	55-21-01
96-610006-70	55-21-01
96-610006-71	55-21-01-032
96-610006-9	55-21-01-038
96-610021-13	55-21-01-014
96-610021-17	55-21-01-015
96-610021-27	55-21-01-016
96-610021-28	55-21-01-017
96-610021-29	55-21-01-012
96-610021-29	55-20-01-005
96-610021-3	55-20-01-006
96-610021-3	55-21-01-013
96-610021-30	55-21-01
96-610021-30	55-20-01
96-610021-35	55-21-01-018
96-610021-4	55-21-01
96-610021-4	55-20-01
96-610021-43	55-20-01-004
96-610021-43	55-21-01-011
96-610022	55-21-01-006
96-610023-601	55-10-01
96-610023-601	55-11-01
96-610024-601	55-11-01-060
96-610025-1	55-20-01
96-610025-3	55-20-01-028

PART NUMBER	CHAP/SUB-SECT/UNIT & ITEM	PART NUMBER	CHAP/SUB-SECT/UNIT & ITEM	PART NUMBER	CHAP/SUB-SECT/UNIT & ITEM
96-620005-10	55-11-01-002	96-620005-66	55-11-01	96-630000-47	55-40-01
96-620005-103	55-11-01	96-620005-67	55-11-01-031	96-630000-55	55-40-01
96-620005-104	55-11-01	96-620005-68	55-11-01	96-630000-57	55-40-01
96-620005-107	55-11-01	96-620005-69	55-11-01-055	96-630000-59	55-40-01
96-620005-108	55-11-01	96-620005-7	55-11-01-004	96-630000-601	55-40-01
96-620005-11	55-11-01-022	96-620005-70	55-11-01	96-630000-601	55-00-01-009
96-620005-11	55-11-01-058	96-620005-83	55-10-01	96-630000-606	55-00-01
96-620005-111	55-11-01	96-620005-83	55-11-01-039	96-630000-606	55-00-02
96-620005-113	55-11-01	96-620005-85	55-11-01	96-630000-606	55-40-01
96-620005-119	55-11-01	96-620005-85	55-10-01	96-630000-607	55-40-01
96-620005-12	55-11-01	96-620005-87	55-11-01-027	96-630000-607	55-00-01
96-620005-120	55-11-01	96-620005-87	55-11-01-013	96-630000-608	55-00-02-009
96-620005-121	55-11-01	96-620005-89	55-11-01-024	96-630000-608	55-40-01
96-620005-122	55-11-01	96-620005-9	55-11-01-023	96-630000-609	55-40-01
96-620005-123	55-11-01-066	96-620005-9	55-11-01-001	96-630000-609	55-00-02
96-620005-129	55-11-01	96-620005-91	55-11-01-028	96-630000-61	55-40-01-015
96-620005-13	55-11-01-021	96-620005-92	55-11-01	96-630000-610	55-40-01
96-620005-130	55-11-01	96-620005-93	55-11-01-025	96-630000-610	55-00-02
96-620005-15	55-11-01-020	96-620005-94	55-11-01	96-630000-63	55-40-01-014
96-620005-15	55-11-01-008	96-620005-97	55-11-01	96-630000-67	55-40-01-043
96-620005-17	55-11-01-009	96-620005-98	55-11-01	96-630000-68	55-40-01-045
96-620005-18	55-11-01-010	96-620005-99	55-11-01	96-630000-71	55-40-01
96-620005-19	55-11-01-011	96-620010-3	53-18-01-086	96-630000-81	55-40-01-020
96-620005-21	55-11-01-018	96-630000-101	55-40-01-002	96-630000-87	55-40-01-037
96-620005-22	55-11-01	96-630000-109	55-40-01-011	96-630000-9	55-40-01
96-620005-23	55-11-01-019	96-630000-11	55-40-01-022	96-630000-91	55-40-01-005
96-620005-25	55-11-01-054	96-630000-111	55-40-01	96-640000-11	55-30-01-014
96-620005-27	55-11-01	96-630000-112	55-40-01-026	96-640000-13	55-30-01-011
96-620005-29	55-11-01-050	96-630000-115	55-40-01	96-640000-15	55-30-01-009
96-620005-31	55-11-01-049	96-630000-117	55-40-01-038	96-640000-17	55-30-01-007
96-620005-33	55-11-01	96-630000-118	55-40-01	96-640000-19	55-30-01-013
96-620005-35	55-11-01-014	96-630000-119	55-40-01-010	96-640000-193	55-30-01-004
96-620005-39	55-11-01-005	96-630000-123	55-40-01-044	96-640000-195	55-30-01-017
96-620005-41	55-11-01-032	96-630000-127	55-40-01-040	96-640000-197	55-30-01
96-620005-42	55-11-01-033	96-630000-129	55-40-01	96-640000-21	55-30-01-019
96-620005-43	55-11-01-057	96-630000-13	55-40-01-025	96-640000-23	55-30-01-018
96-620005-46	55-11-01-068	96-630000-131	55-40-01-041	96-640000-25	55-30-01
96-620005-46	55-11-01-035	96-630000-133	55-40-01-024	96-640000-27	55-30-01-028
96-620005-47	55-11-01-015	96-630000-141	55-40-01	96-640000-27	33-45-01-003
96-620005-49	55-11-01-047	96-630000-143	55-40-01-046	96-640000-29	55-30-01-027
96-620005-5	55-11-01-003	96-630000-15	55-40-01-019	96-640000-3	55-30-01-006
96-620005-50	55-11-01	96-630000-17	55-40-01-018	96-640000-31	55-30-01
96-620005-51	55-11-01-048	96-630000-19	55-40-01-004	96-640000-37	55-30-01-016
96-620005-52	55-11-01	96-630000-193	55-40-01-023	96-640000-39	55-30-01-005
96-620005-55	55-11-01-051	96-630000-195	55-40-01-016	96-640000-40	55-30-01
96-620005-55	55-11-01-012	96-630000-203	55-40-01	96-640000-43	55-30-01-003
96-620005-57	55-11-01-053	96-630000-23	55-40-01-009	96-640000-45	55-30-01-015
96-620005-59	55-11-01-052	96-630000-27	55-40-01-006	96-640000-47	55-30-01-022
96-620005-61	55-11-01-017	96-630000-271	55-40-01	96-640000-49	55-30-01-021
96-620005-611	55-11-01	96-630000-275	55-40-01-027	96-640000-5	55-30-01-008
96-620005-613	55-11-01	96-630000-277	55-40-01-029	96-640000-51	55-30-01
96-620005-615	55-11-01	96-630000-279	55-40-01-028	96-640000-55	55-30-01-024
96-620005-616	55-11-01	96-630000-29	55-40-01-039	96-640000-56	55-30-01
96-620005-617	55-11-01	96-630000-3	55-40-01-042	96-640000-57	55-30-01-025
96-620005-619	55-11-01	96-630000-303	55-40-01-021	96-640000-601	55-30-01
96-620005-623	55-11-01	96-630000-305	55-40-01	96-640000-601	55-00-01
96-620005-623	55-00-02	96-630000-307	55-40-01-013	96-640000-606	55-00-01-007
96-620005-624	55-00-02	96-630000-309	55-40-01	96-640000-606	55-00-02-007
96-620005-624	55-11-01	96-630000-31	55-40-01-036	96-640000-606	55-30-01
96-620005-625	55-11-01	96-630000-311	55-40-01-017	96-640000-631	55-30-01
96-620005-626	55-11-01	96-630000-313	55-40-01-012	96-640000-633	55-30-01
96-620005-627	55-11-01	96-630000-315	55-40-01	96-640000-7	55-30-01-010
96-620005-63	55-11-01-056	96-630000-32	55-40-01	96-640000-9	55-30-01-012
96-620005-65	55-11-01-030	96-630000-333	55-40-01-001	96-640000-95	55-30-01
96-620005-653	55-11-01	96-630000-39	55-40-01-035	96-640000-99	55-30-01
96-620005-653	55-00-02-001	96-630000-41	55-40-01	96-640010	55-30-01
96-620005-654	55-00-02	96-630000-43	55-40-01	96-640010-1	55-30-01
96-620005-654	55-11-01	96-630000-43	27-20-10	96-640010-3	55-30-01-001
96-620005-655	55-11-01	96-630000-443	55-40-01-032	96-640011	55-30-01
96-620005-655	55-00-02	96-630000-455	55-40-01-030	96-640011-1	55-30-01-002
96-620005-656	55-00-02	96-630000-457	55-40-01-033	96-810010	32-10-10-087
96-620005-656	55-11-01	96-630000-459	55-40-01	96-810011	32-10-10

PART NUMBER	CHAP/SUB-SECT/UNIT & ITEM	PART NUMBER	CHAP/SUB-SECT/UNIT & ITEM	PART NUMBER	CHAP/SUB-SECT/UNIT & ITEM
96-810012	32-10-20-081	96-910001-107	71-12-01	96-910001-51	71-02-02
96-810013	32-10-20	96-910001-107	71-72-01-019	96-910001-53	71-00-01-026
96-810017	32-10-20	96-910001-109	71-70-01	96-910001-53	71-00-02
96-810018	32-10-20	96-910001-111	71-70-01-022	96-910001-57	71-00-02-043
96-810019	32-10-20	96-910001-113	71-70-01-021	96-910001-57	71-00-03-043
96-810020	32-10-20	96-910001-115	71-00-02	96-910001-57	71-00-01-030
96-810021	32-10-20	96-910001-115	71-00-03	96-910001-601	71-00-01
96-810022	32-60-01	96-910001-116	71-00-03	96-910001-601	71-00-03
96-810022-1	32-60-01	96-910001-116	71-00-02	96-910001-601	71-00-02
96-810022-11	32-60-01-013	96-910001-117	71-70-01-029	96-910001-601	71-70-01
96-810022-17	32-60-01-025	96-910001-119	71-70-01	96-910001-602	71-70-01
96-810022-21	32-60-01-026	96-910001-119	71-72-01-021	96-910001-602	71-00-02
96-810022-25	32-60-01-018	96-910001-123	61-10-02	96-910001-602	71-00-03
96-810022-27	32-60-01-027	96-910001-123	71-00-02-053	96-910001-602	71-00-01
96-810022-27	32-60-01-016	96-910001-123	71-00-03	96-910001-61	71-70-01
96-810022-29	32-60-01-014	96-910001-123	71-00-01-049	96-910001-61	71-70-01
96-810022-31	32-60-01	96-910001-125	71-00-03	96-910001-65	71-00-01
96-810022-33	32-60-01-012	96-910001-125	71-00-02	96-910001-65	71-00-02
96-810022-37	32-60-01-007	96-910001-126	71-00-02	96-910001-65	71-00-03
96-810022-39	32-60-01-019	96-910001-126	71-00-03	96-910001-65	61-10-01
96-810022-41	32-60-01	96-910001-127	71-00-03	96-910001-79	71-00-03
96-810022-43	32-60-01-001	96-910001-127	71-00-02	96-910001-79	71-00-02
96-810022-44	32-60-01	96-910001-128	71-00-02	96-910001-79	71-00-01
96-810022-45	32-60-01-029	96-910001-128	71-00-03	96-910001-87	71-70-01-014
96-810022-5	32-60-01-028	96-910001-13	71-70-01-003	96-910001-87	78-13-01-029
96-810022-607	32-60-01	96-910001-130	71-00-03-023	96-910001-87	71-72-01-009
96-820000	32-20-01	96-910001-130	71-00-02-023	96-910001-87	78-12-01-019
96-820000-5	32-20-01	96-910001-132	71-00-02	96-910001-89	71-00-01
96-820000-601	32-20-01	96-910001-133	71-00-02-028	96-910001-89	71-00-02
96-820000-601	32-20-20	96-910001-133	71-00-03-028	96-910001-89	71-00-03
96-820000-603	32-20-20	96-910001-134	71-00-03-041	96-910001-90	71-00-03
96-820000-603	32-20-01	96-910001-134	71-00-02-041	96-910001-90	71-00-02
96-820000-605	32-20-01	96-910001-139	71-00-03	96-910001-90	71-00-01
96-820000-605	32-20-20	96-910001-140	71-00-03	96-910001-91	71-70-01
96-820000-651	32-20-01	96-910001-141	71-00-03	96-910001-93	71-70-01-028
96-820000-651	32-20-20	96-910001-142	71-00-03	96-910001-93	71-72-01-020
96-820010	32-20-10-071	96-910001-145	71-00-03	96-910001-95	71-72-01-016
96-820012	32-30-10	96-910001-145	71-00-02	96-910001-95	71-70-01-025
96-820012-1	32-30-10-024	96-910001-145	71-00-01	96-910001-95	71-12-01
96-820013	32-50-01	96-910001-153	71-00-03	96-910001-97	71-70-01-019
96-820013-601	32-50-01	96-910001-154	71-00-03	96-910001-97	71-72-01
96-820014	32-50-01	96-910001-155	71-00-03	96-910001-98	71-72-01-015
96-820014-3	32-50-01	96-910001-156	71-00-03	96-910001-98	71-70-01
96-820014-5	32-50-01	96-910001-157	71-00-03	96-910002-11	71-02-01
96-820015	32-30-10	96-910001-158	71-00-03	96-910002-19	71-72-01-004
96-820016-17	32-20-20-027	96-910001-159	71-00-03	96-910002-2	71-02-01
96-820016-3	32-20-20-009	96-910001-160	71-00-03	96-910002-21	71-72-01-013
96-820018-3	32-20-20-028	96-910001-161	71-00-03-032	96-910002-3	71-72-01
96-820019-1	32-20-20	96-910001-161	54-10-01	96-910002-35	71-72-01-023
96-820020	32-20-20	96-910001-17	71-70-01	96-910002-39	71-72-01
96-820020-1	32-20-20-018	96-910001-19	71-70-01	96-910002-41	71-72-01
96-820025	32-30-10	96-910001-2	71-00-01	96-910002-41	71-02-01
96-820025-11	32-30-10	96-910001-21	71-00-01	96-910002-43	71-72-01
96-820025-3	32-30-10	96-910001-23	71-00-01	96-910002-45	71-72-01-006
96-820029-5	32-20-20-055	96-910001-25	71-00-01	96-910002-49	71-02-01-025
96-820029-7	32-20-20	96-910001-29	71-00-01-028	96-910002-51	71-02-01
96-820030	32-50-01	96-910001-29	71-00-03-037	96-910002-53	71-02-01
96-820030	53-11-01	96-910001-29	71-00-02-037	96-910002-55	71-72-01
96-820031	32-20-20-063	96-910001-29	54-10-01-012	96-910002-59	71-02-01
96-820031	11-20-01	96-910001-31	71-00-02-036	96-910002-60	71-02-01
96-820032	11-20-01	96-910001-31	71-00-03-036	96-910002-601	71-02-01
96-820032	32-20-20	96-910001-31	71-00-01-037	96-910002-601	71-02-02
96-820034	32-30-10	96-910001-33	71-00-01-023	96-910002-601	71-72-01
96-820036	32-30-10	96-910001-33	71-00-02	96-910002-602	71-72-01
96-820036	11-20-10-022	96-910001-41	71-70-01	96-910002-602	71-02-02
96-820036	11-20-01	96-910001-43	71-70-01	96-910002-61	71-02-01-049
96-910001-1	71-00-01	96-910001-44	71-70-01	96-910002-61	61-12-01
96-910001-103	71-12-01	96-910001-45	71-70-01-004	96-910002-61	71-00-03
96-910001-103	71-70-01-026	96-910001-47	71-70-01	96-910002-63	71-02-01
96-910001-103	71-72-01-017	96-910001-51	71-00-02	96-910002-64	71-02-01
96-910001-105	71-70-01-017	96-910001-51	71-00-01	96-910002-65	71-02-01
96-910001-107	71-70-01-027	96-910001-51	71-02-01	96-910002-65	61-12-03

PART NUMBER	CHAP/SUB-SECT/UNIT & ITEM
96-910002-67	71-72-01-024
96-910002-69	71-72-01
96-910002-75	71-02-01
96-910002-75	36-10-01
96-910002-76	36-10-01
96-910002-76	71-02-01
96-910002-77	71-02-01
96-910002-77	36-10-01
96-910002-78	36-10-01
96-910002-78	71-02-01
96-910002-79	71-02-02
96-910002-79	36-10-01
96-910002-80	36-10-01
96-910002-80	71-02-02
96-910002-81	71-02-02
96-910002-81	36-10-01
96-910002-82	36-10-01
96-910002-82	71-02-02
96-910002-83	71-02-02-032
96-910002-83	71-02-01-027
96-910002-83	36-10-01-010
96-910002-83	30-10-30-005
96-910002-85	36-10-01-009
96-910002-85	71-02-01-022
96-910002-85	71-02-02-027
96-910002-87	71-02-02-028
96-910002-87	71-02-01-023
96-910002-87	36-10-01-015
96-910002-89	36-10-01-017
96-910002-89	71-02-01
96-910002-89	71-02-02-030
96-910002-9	71-02-02-050
96-910002-9	71-02-01-045
96-910005-55	71-00-01
96-910005-75	71-00-01-013
96-910005-75	71-00-02-013
96-910005-75	71-00-03-013
96-910010-57	71-02-01-013
96-910010-57	71-02-02-012
96-910010-61	71-02-02
96-910011-1	71-10-01
96-910011-10	71-10-01
96-910011-10	71-12-01
96-910011-107	71-10-01
96-910011-108	71-10-01
96-910011-11	71-10-01-017
96-910011-11	71-12-01-015
96-910011-113	71-10-01
96-910011-115	71-12-01-039
96-910011-115	71-10-01-045
96-910011-116	71-12-01
96-910011-116	71-10-01
96-910011-12	71-12-01
96-910011-12	71-10-01
96-910011-120	71-10-01
96-910011-121	71-10-01-048
96-910011-123	71-10-01-049
96-910011-123	71-12-01-057
96-910011-124	71-12-01
96-910011-124	71-10-01
96-910011-127	71-12-01-020
96-910011-127	71-10-01-015
96-910011-128	71-10-01
96-910011-128	71-12-01
96-910011-129	71-10-01-046
96-910011-129	71-12-01-056
96-910011-13	71-12-01-014
96-910011-13	71-10-01
96-910011-133	71-10-01-063
96-910011-134	71-10-01
96-910011-135	71-10-01
96-910011-136	71-10-01
96-910011-137	71-10-01-064
96-910011-138	71-10-01
96-910011-14	71-12-01
96-910011-14	71-10-01
96-910011-149	71-10-01
96-910011-149	71-12-01
96-910011-15	71-12-01
96-910011-15	71-10-01
96-910011-150	71-10-01
96-910011-150	71-12-01
96-910011-151	71-12-01-008
96-910011-151	71-10-01-008
96-910011-157	71-10-01-047
96-910011-161	71-10-01-026
96-910011-163	71-10-01-025
96-910011-165	71-10-01-035
96-910011-167	71-10-01-036
96-910011-169	71-10-01-037
96-910011-179	71-12-01-063
96-910011-179	71-10-01-061
96-910011-180	71-10-01
96-910011-180	71-12-01
96-910011-181	71-10-01-060
96-910011-181	71-12-01-062
96-910011-182	71-12-01
96-910011-182	71-10-01
96-910011-183	71-10-01
96-910011-183	71-12-01
96-910011-184	71-12-01
96-910011-184	71-10-01
96-910011-185	71-10-01-051
96-910011-186	71-10-01
96-910011-187	71-10-01
96-910011-188	71-10-01
96-910011-189	71-12-01-021
96-910011-189	71-10-01-020
96-910011-190	71-10-01
96-910011-190	71-12-01
96-910011-191	71-12-01-023
96-910011-191	71-10-01-039
96-910011-193	71-10-01-040
96-910011-193	71-12-01-024
96-910011-194	71-12-01
96-910011-194	71-10-01
96-910011-199	71-10-01
96-910011-200	71-10-01
96-910011-201	71-10-01-062
96-910011-203	71-12-01-028
96-910011-203	71-10-01-029
96-910011-205	71-10-01-019
96-910011-205	71-12-01-017
96-910011-207	71-12-01
96-910011-207	71-10-01
96-910011-211	71-10-01-021
96-910011-212	71-10-01
96-910011-213	71-10-01
96-910011-213	71-12-01
96-910011-215	71-12-01
96-910011-215	71-10-01
96-910011-217	71-10-01-044
96-910011-218	71-10-01
96-910011-219	71-10-01-043
96-910011-219	71-12-01-053
96-910011-29	71-10-01
96-910011-3	71-12-01-012
96-910011-3	71-10-01-010
96-910011-30	71-10-01
96-910011-31	71-10-01
96-910011-32	71-10-01
96-910011-33	71-10-01-053
96-910011-34	71-10-01
96-910011-35	71-10-01
96-910011-36	71-10-01
96-910011-37	71-10-01
96-910011-38	71-10-01
96-910011-39	71-10-01
96-910011-40	71-10-01
96-910011-41	71-10-01
96-910011-42	71-10-01
96-910011-45	71-10-01-055
96-910011-46	71-10-01
96-910011-47	71-10-01-052
96-910011-47	71-12-01-065
96-910011-48	71-12-01
96-910011-48	71-10-01
96-910011-49	71-10-01
96-910011-5	71-12-01-007
96-910011-5	71-10-01-007
96-910011-50	71-10-01
96-910011-55	71-12-01-022
96-910011-55	71-10-01-022
96-910011-56	71-10-01
96-910011-56	71-12-01
96-910011-57	71-10-01-023
96-910011-59	71-10-01-024
96-910011-61	71-10-01-041
96-910011-610	71-10-01
96-910011-612	71-10-01
96-910011-613	71-10-01
96-910011-615	71-10-01
96-910011-623	71-10-01
96-910011-624	71-10-01
96-910011-625	71-10-01
96-910011-626	71-10-01
96-910011-628	71-12-01
96-910011-63	71-10-01
96-910011-69	71-10-01-056
96-910011-7	71-12-01-001
96-910011-7	71-10-01-001
96-910011-71	71-10-01-042
96-910011-73	71-10-01-054
96-910011-75	71-10-01-027
96-910011-79	71-10-01-028
96-910011-81	71-12-01-011
96-910011-82	71-12-01
96-910011-87	71-10-01
96-910011-89	71-10-01
96-910011-9	71-12-01-016
96-910011-9	71-10-01-016
96-910011-90	71-10-01
96-910011-91	71-10-01
96-910011-92	71-10-01
96-910011-93	71-10-01
96-910011-94	71-10-01
96-910011-97	71-10-01
96-910011-98	71-10-01
96-910011-98	71-10-01
96-910012	71-12-01
96-910012	71-02-01-050
96-910012-101	71-12-01-055
96-910012-102	71-12-01
96-910012-103	71-12-01-054
96-910012-105	71-12-01
96-910012-105	71-02-01
96-910012-105	71-02-02-055
96-910012-109	71-12-01-046
96-910012-11	71-12-01-027
96-910012-119	30-64-01
96-910012-121	71-12-01-074
96-910012-123	71-12-01
96-910012-125	71-12-01
96-910012-13	71-12-01-037
96-910012-14	71-12-01
96-910012-15	71-12-01-025

PART NUMBER	CHAP/SUB-SECT/UNIT & ITEM	PART NUMBER	CHAP/SUB-SECT/UNIT & ITEM	PART NUMBER	CHAP/SUB-SECT/UNIT & ITEM
96-910012-17	71-12-01-026	96-910015-183	71-60-01	96-910020-119	71-62-01-051
96-910012-19	71-12-01-040	96-910015-185	71-60-01-032	96-910020-125	71-62-01-006
96-910012-23	71-12-01-038	96-910015-189	71-60-01	96-910020-127	71-62-01-007
96-910012-24	71-12-01	96-910015-19	71-60-01-024	96-910020-129	71-62-01-008
96-910012-37	71-12-01-059	96-910015-21	71-60-01	96-910020-13	71-62-01-045
96-910012-39	71-12-01-060	96-910015-25	71-60-01-030	96-910020-131	71-62-01-009
96-910012-41	71-12-01-069	96-910015-31	71-60-01	96-910020-137	71-62-01-070
96-910012-42	71-12-01	96-910015-33	71-60-01-014	96-910020-149	71-62-01-032
96-910012-45	71-12-01-035	96-910015-35	71-60-01-011	96-910020-15	71-62-01-049
96-910012-47	71-12-01-036	96-910015-37	71-60-01-012	96-910020-151	71-62-01
96-910012-48	71-12-01	96-910015-41	71-60-01-052	96-910020-157	71-62-01-018
96-910012-49	71-12-01-030	96-910015-45	71-60-01-031	96-910020-17	71-62-01-048
96-910012-5	71-12-01-068	96-910015-51	71-60-01	96-910020-173	71-62-01-019
96-910012-50	71-12-01	96-910015-55	71-60-01-044	96-910020-181	71-62-01-017
96-910012-51	71-12-01-032	96-910015-63	71-60-01-017	96-910020-183	71-62-01-016
96-910012-51	71-12-01-033	96-910015-65	71-60-01-018	96-910020-189	71-62-01-023
96-910012-55	71-12-01-031	96-910015-67	71-60-01-019	96-910020-19	71-62-01
96-910012-57	71-12-01-034	96-910015-69	71-60-01-013	96-910020-191	71-62-01-024
96-910012-61	71-12-01-066	96-910015-7	71-60-01	96-910020-195	71-62-01
96-910012-610	71-12-01	96-910015-71	71-60-01	96-910020-199	71-62-01-059
96-910012-611	71-12-01	96-910015-73	71-60-01-075	96-910020-201	71-62-01-054
96-910012-612	71-12-01	96-910015-75	71-60-01	96-910020-203	71-62-01-064
96-910012-613	71-12-01	96-910015-77	71-60-01-043	96-910020-205	71-62-01
96-910012-615	71-12-01	96-910015-79	71-60-01	96-910020-207	71-62-01
96-910012-617	71-12-01	96-910015-81	71-60-01-059	96-910020-209	71-62-01-060
96-910012-619	71-12-01	96-910015-81	71-62-01-040	96-910020-21	71-62-01-044
96-910012-62	71-12-01	96-910015-85	71-60-01-054	96-910020-211	71-62-01-061
96-910012-63	71-12-01-067	96-910015-87	71-60-01-055	96-910020-213	71-62-01-053
96-910012-64	71-12-01	96-910015-89	71-60-01-039	96-910020-215	71-62-01-025
96-910012-65	71-12-01-070	96-910015-89	71-62-01-052	96-910020-219	71-62-01-012
96-910012-66	71-12-01	96-910015-91	71-60-01-050	96-910020-221	71-62-01
96-910012-68	71-12-01	96-910015-93	71-60-01-051	96-910020-223	71-62-01-010
96-910012-69	71-12-01-029	96-910015-95	71-60-01	96-910020-225	71-62-01
96-910012-71	71-12-01	96-910015-97	71-60-01	96-910020-229	71-62-01
96-910012-87	71-12-01-044	96-910016-19	71-10-01-067	96-910020-23	71-62-01-041
96-910012-91	71-12-01-045	96-910016-39	71-10-01-070	96-910020-233	71-62-01-015
96-910015	71-60-01	96-910016-39	71-12-01-018	96-910020-235	71-62-01-020
96-910015-101	71-60-01-061	96-910016-39	71-10-01-018	96-910020-243	71-62-01-026
96-910015-103	71-60-01	96-910016-41	71-12-01-078	96-910020-245	71-62-01-021
96-910015-107	71-60-01	96-910016-41	71-10-01-069	96-910020-247	71-62-01-022
96-910015-109	71-60-01-053	96-910016-43	71-10-01-068	96-910020-249	71-62-01-013
96-910015-11	71-60-01-021	96-910016-43	71-12-01-079	96-910020-25	71-62-01-043
96-910015-111	71-60-01	96-910016-53	71-12-01-082	96-910020-251	71-62-01-001
96-910015-113	71-60-01-033	96-910016-55	71-12-01-077	96-910020-253	71-62-01-031
96-910015-115	71-60-01	96-910016-55	71-10-01-066	96-910020-255	71-62-01-071
96-910015-115	71-60-01	96-910016-56	71-10-01	96-910020-257	71-62-01-011
96-910015-119	71-60-01	96-910016-56	71-12-01	96-910020-259	71-62-01-037
96-910015-121	71-60-01-034	96-910016-57	71-12-01	96-910020-261	71-62-01
96-910015-123	71-60-01-035	96-910016-57	71-10-01	96-910020-263	71-62-01
96-910015-125	71-60-01-036	96-910016-613	71-12-01	96-910020-265	71-62-01
96-910015-127	71-60-01-037	96-910016-7	71-12-01-076	96-910020-267	71-62-01
96-910015-133	71-60-01	96-910016-7	71-10-01-065	96-910020-29	71-62-01-002
96-910015-135	71-60-01-026	96-910017	71-60-01	96-910020-3	71-62-01
96-910015-137	71-60-01	96-910017	25-10-01	96-910020-31	71-62-01-003
96-910015-139	71-60-01-048	96-910017-1	25-10-01	96-910020-33	71-62-01-004
96-910015-149	71-60-01-025	96-910017-1	71-60-01	96-910020-35	71-62-01-005
96-910015-15	71-60-01	96-910017-11	71-60-01-080	96-910020-361	71-62-01
96-910015-151	71-60-01-016	96-910017-13	71-60-01-081	96-910020-363	71-62-01
96-910015-153	71-60-01-022	96-910017-15	71-60-01	96-910020-365	71-62-01
96-910015-155	71-60-01	96-910017-15	25-10-01	96-910020-367	71-62-01
96-910015-157	71-60-01-023	96-910017-7	25-10-01-012	96-910020-371	71-62-01
96-910015-159	71-60-01-074	96-910017-7	71-60-01-077	96-910020-39	71-62-01-063
96-910015-161	71-60-01	96-910017-9	71-60-01	96-910020-5	71-62-01
96-910015-163	71-60-01	96-910017-9	25-10-01-013	96-910020-61	71-62-01-062
96-910015-165	71-60-01-049	96-910018	25-10-01	96-910020-63	71-62-01-055
96-910015-167	71-60-01-010	96-910018	11-30-01-088	96-910020-65	71-62-01-056
96-910015-169	71-60-01	96-910018	71-60-01-079	96-910020-67	71-62-01-057
96-910015-17	71-60-01	96-910020	71-62-01	96-910020-69	71-62-01-058
96-910015-171	71-60-01	96-910020	71-02-01-038	96-910020-7	71-62-01-042
96-910015-173	71-60-01-020	96-910020	71-02-02-043	96-910020-77	71-62-01
96-910015-179	71-60-01-029	96-910020-11	71-62-01-046	96-910020-81	71-62-01
96-910015-181	71-60-01-038	96-910020-117	71-62-01-050	96-910020-83	71-62-01-036

PART NUMBER	CHAP/SUB-SECT/UNIT & ITEM
96-910020-85	71-62-01
96-910020-87	71-62-01-027
96-910020-9	71-62-01-047
96-910022	71-02-02
96-910022	71-02-01
96-910024	71-02-02-042
96-910024	71-02-01-037
96-910024	71-66-01
96-910024-15	71-66-01-035
96-910024-17	71-66-01-036
96-910024-25	71-66-01-041
96-910024-27	71-66-01-037
96-910024-31	71-66-01
96-910024-39	71-66-01-038
96-910024-41	71-66-01-034
96-910024-43	71-66-01-033
96-910024-45	71-66-01-032
96-910024-602	71-66-01-031
96-910030	71-02-01-040
96-910030	71-02-02-045
96-910030	76-16-01
96-910030-1	76-16-01-060
96-910030-3	76-16-01-059
96-910034-11	71-62-01
96-910034-13	71-62-01
96-910034-15	25-10-01
96-910034-17 C	25-10-01-014
96-910034-9	71-62-01-072
96-910037-1	71-62-01-073
96-910037-1	25-10-01
96-910038-1	25-10-01
96-910038-1	11-30-10-058
96-910038-1	71-62-01-074
96-910040-1	71-02-02-034
96-910040-1	71-02-01-029
96-910041-1	71-02-01
96-910041-1	71-02-02
96-910045-1	71-70-01
96-910045-11	30-10-20
96-910045-17	71-70-01-016
96-910045-19	71-70-01
96-910045-3	71-70-01
96-910045-5	71-70-01
96-910045-7	71-70-01
96-910045-9	30-10-20-069
96-910048-3	25-10-01
96-919100-101	71-64-01-010
96-919100-103	71-64-01-014
96-919100-109	71-64-01
96-919100-11	71-64-01-012
96-919100-113	71-64-01
96-919100-119	71-64-01
96-919100-127	71-64-01-009
96-919100-129	71-64-01
96-919100-131	71-64-01-016
96-919100-133	71-64-01
96-919100-147	71-64-01
96-919100-163	71-64-01-026
96-919100-21	71-64-01
96-919100-31	71-64-01-015
96-919100-33	71-64-01
96-919100-39	71-64-01-025
96-919100-49	71-64-01
96-919100-51	71-64-01-020
96-919100-609	71-64-01
96-919100-609	71-00-03-017
96-919100-609	71-00-02-017
96-919100-609	71-00-01-017
96-919100-61	71-64-01-008
96-919100-611	71-64-01
96-919100-611	71-00-01
96-919100-611	71-00-02
96-919100-613	71-00-02
96-919100-613	71-00-01
96-919100-613	71-64-01
96-919100-615	71-64-01
96-919100-615	71-00-01
96-919100-615	71-00-02
96-919100-615	71-00-03
96-919100-617	71-00-03
96-919100-617	71-00-02
96-919100-617	71-64-01
96-919100-618	71-64-01
96-919100-618	71-00-02
96-919100-618	71-00-03
96-919100-63	71-64-01
96-919100-65	71-64-01-005
96-919100-69	71-64-01
96-919100-71	71-64-01-017
96-919100-75	71-64-01-018
96-919100-79	71-64-01-027
96-919100-81	71-64-01-022
96-919100-83	71-64-01-023
96-919100-85	71-64-01-024
96-919100-89	71-64-01-021
96-919100-9	71-64-01
96-919100-91	71-64-01-002
96-919100-93	71-64-01-019
96-919100-95	71-64-01-013
96-919100-97	71-64-01-011
96-919101	71-66-01
96-919101	71-02-02-041
96-919101	71-02-01-036
96-919101-107	71-66-01-017
96-919101-115	71-66-01
96-919101-115	71-02-01
96-919101-115	71-02-02
96-919101-119	71-66-01
96-919101-13	71-66-01-004
96-919101-21	71-66-01-013
96-919101-37	71-66-01-014
96-919101-39	71-66-01
96-919101-41	71-66-01-011
96-919101-43	71-66-01-012
96-919101-59	71-66-01-027
96-919101-603	71-66-01-002
96-919101-605	71-66-01
96-919101-606	71-66-01
96-919101-607	71-66-01-001
96-919101-63	71-66-01-018
96-919101-64	71-66-01
96-919101-79	71-66-01-003
96-919101-81	71-66-01
96-919101-85	71-66-01-007
96-919101-87	71-66-01
96-919101-97	71-66-01-015
96-919111	71-66-01-029
96-919112-1	71-64-01
96-919113	71-64-01
96-920001	73-10-01
96-920001	28-25-10
96-920001	28-20-01
96-920001	28-10-01
96-920001	28-10-10
96-920001-1	28-10-10-004
96-920001-10	28-10-10
96-920001-101	28-10-10
96-920001-103	28-20-01-052
96-920001-104	28-20-01
96-920001-105	28-20-01
96-920001-107	28-20-01
96-920001-11	28-10-10-020
96-920001-111	28-20-01-034
96-920001-113	28-20-01-048
96-920001-115	28-20-01-033
96-920001-115	28-25-10-026
96-920001-119	28-20-01-028
96-920001-12	28-10-10
96-920001-125	28-25-10-030
96-920001-127	28-25-10-023
96-920001-127	28-20-01-036
96-920001-129	28-20-01
96-920001-13	28-10-10-016
96-920001-131	28-20-01
96-920001-133	28-20-01-054
96-920001-134	28-20-01
96-920001-135	28-20-01-051
96-920001-136	28-20-01
96-920001-139	28-20-01
96-920001-14	28-10-10
96-920001-140	28-20-01
96-920001-151	28-20-01-025
96-920001-152	28-20-01
96-920001-153	28-20-01-014
96-920001-154	28-20-01
96-920001-155	28-20-01
96-920001-155	28-10-10
96-920001-155	28-10-01
96-920001-155	28-25-10
96-920001-155	73-10-01
96-920001-163	28-10-10-008
96-920001-167	28-20-01-007
96-920001-167	28-20-01
96-920001-168	28-20-01
96-920001-168	28-20-01
96-920001-169	28-20-01-011
96-920001-169	28-20-01
96-920001-17	28-25-10
96-920001-170	28-20-01
96-920001-170	28-20-01
96-920001-171	28-20-01-037
96-920001-173	28-20-01-029
96-920001-175	28-10-10-012
96-920001-176	28-10-10
96-920001-177	28-10-10-010
96-920001-177	28-10-10
96-920001-178	28-10-10
96-920001-178	28-10-10
96-920001-179	28-20-01-009
96-920001-179	28-20-01
96-920001-180	28-20-01
96-920001-180	28-20-01
96-920001-183	28-20-01-019
96-920001-185	28-20-01-022
96-920001-186	28-20-01
96-920001-187	28-20-01-021
96-920001-19	28-25-10-011
96-920001-191	28-25-10-003
96-920001-195	28-20-01-042
96-920001-195	57-10-10
96-920001-199	28-25-10-012
96-920001-200	28-25-10-013
96-920001-201	28-25-10-014
96-920001-202	28-25-10-015
96-920001-203	28-25-10
96-920001-205	28-20-01
96-920001-206	28-20-01
96-920001-207	28-20-01-056
96-920001-208	28-20-01
96-920001-21	28-20-01-049
96-920001-213	28-20-01
96-920001-214	28-20-01
96-920001-215	28-20-01
96-920001-216	28-20-01
96-920001-217	28-20-01-059
96-920001-218	28-20-01

PART NUMBER	CHAP/SUB-SECT/UNIT & ITEM	PART NUMBER	CHAP/SUB-SECT/UNIT & ITEM	PART NUMBER	CHAP/SUB-SECT/UNIT & ITEM
96-920001-22	28-20-01	96-920001-303	28-20-01	96-920010-5	71-70-01-018
96-920001-221	28-20-01	96-920001-311	28-20-01	96-920010-5	71-70-01-024
96-920001-223	28-20-01	96-920001-315	28-20-01-008	96-920010-7	71-70-01
96-920001-227	28-20-01	96-920001-321	28-20-01	96-920010-7	71-72-01
96-920001-229	28-20-01	96-920001-322	28-20-01	96-920011-1	28-25-10-001
96-920001-23	28-20-01-050	96-920001-323	28-20-01	96-920011-1	11-30-01-098
96-920001-231	28-25-10	96-920001-35	28-20-01	96-920011-15	28-25-10
96-920001-231	28-20-01	96-920001-37	28-20-01-047	96-920011-17	28-25-10
96-920001-231	28-10-10	96-920001-38	28-20-01	96-920011-17	11-30-01-099
96-920001-231	28-10-01	96-920001-39	28-20-01-046	96-920011-25	28-25-10
96-920001-233	28-10-01	96-920001-40	28-20-01	96-920011-27	28-25-10
96-920001-233	28-10-10	96-920001-43	28-20-01-031	96-920011-29	28-25-10
96-920001-233	28-20-01	96-920001-45	28-20-01-038	96-920011-29	28-25-10
96-920001-233	28-25-10	96-920001-47	28-20-01-001	96-920011-3	28-25-10
96-920001-233	73-10-01	96-920001-5	28-10-10-001	96-920011-9	28-25-10
96-920001-235	28-20-01	96-920001-57	28-20-01-039	96-920011-9	28-25-10
96-920001-237	28-20-01-018	96-920001-58	28-20-01	96-920011-9	28-25-10
96-920001-238	28-20-01	96-920001-59	28-20-01-003	96-920011-9	28-25-10
96-920001-239	28-10-10-019	96-920001-61	28-10-10-023	96-920012-5	28-25-10-007
96-920001-24	28-20-01	96-920001-611	28-20-01	96-920013	25-28-10
96-920001-240	28-10-10	96-920001-611	28-25-10-027	96-920013-5	25-28-10-003
96-920001-241	28-20-01	96-920001-611	28-20-50	96-920013-5	25-22-01-106
96-920001-243	28-10-10-015	96-920001-612	28-20-50	96-920013-5	25-28-20
96-920001-244	28-10-10	96-920001-612	28-20-01	96-920013-7	25-28-20-013
96-920001-245	28-20-01	96-920001-612	28-25-10-028	96-920013-9	25-28-20-014
96-920001-247	28-20-01	96-920001-62	28-10-10	96-920014	71-00-03-047
96-920001-249	28-20-01	96-920001-620	28-20-01	96-920014	71-00-02-047
96-920001-25	28-20-01-055	96-920001-620	28-25-10	96-920014	73-10-01-005
96-920001-251	28-20-01	96-920001-627	28-20-01	96-920014	73-12-01-009
96-920001-253	28-20-01	96-920001-628	28-20-01	96-920016-5	28-20-01-043
96-920001-255	28-20-01	96-920001-63	28-10-10-005	96-920016-5	57-10-20
96-920001-257	28-20-01	96-920001-630	28-20-01	96-920016-7	57-10-20
96-920001-259	28-20-01	96-920001-630	28-25-10	96-920016-7	28-20-01
96-920001-26	28-20-01	96-920001-631	28-25-10	96-920017	28-20-01
96-920001-261	28-20-01-040	96-920001-631	28-20-01	96-920017	57-10-10
96-920001-263	28-20-01-041	96-920001-632	28-20-01-017	96-924011	28-25-10
96-920001-265	28-25-10	96-920001-632	28-25-10	96-924011	28-25-10
96-920001-265	28-10-10	96-920001-633	28-20-01	96-924011	11-30-10-059
96-920001-265	28-10-01	96-920001-634	28-20-01	96-924011-1	28-25-10
96-920001-265	28-20-01	96-920001-637	28-25-10	96-924011-3	28-25-10
96-920001-265	73-12-01	96-920001-637	28-20-01	96-924011-5	28-25-10
96-920001-267	73-12-01	96-920001-638	28-20-01	96-924011-5	28-25-10
96-920001-267	28-20-01	96-920001-638	28-25-10	96-924011-5	11-30-10-060
96-920001-267	28-10-01	96-920001-639	28-20-01	96-924024	25-28-10
96-920001-267	28-10-10	96-920001-639	28-20-01	96-924026-3	28-25-10
96-920001-267	28-25-10	96-920001-640	28-20-01	96-924026-5	28-25-10
96-920001-27	28-20-01-061	96-920001-640	28-20-01	96-924026-7	28-25-10
96-920001-271	28-20-01	96-920001-65	28-20-01-026	96-924026-7	53-17-01
96-920001-275	73-10-01	96-920001-67	28-20-01-027	96-924026-8	53-17-01
96-920001-277	28-10-10-025	96-920001-69	28-20-01-004	96-924026-8	28-25-10
96-920001-279	28-20-01-005	96-920001-7	28-10-10-009	96-924026-9	28-25-10
96-920001-28	28-20-01	96-920001-70	28-20-01	96-924028-1	28-25-10
96-920001-283	28-25-10	96-920001-71	28-20-01-012	96-924028-3	28-25-10
96-920001-283	28-20-01	96-920001-72	28-20-01	96-924029-1	28-25-10
96-920001-283	28-10-10	96-920001-73	28-20-01-016	96-940000	76-10-01
96-920001-283	28-10-01	96-920001-77	28-20-01-024	96-940000-10	76-12-01
96-920001-283	73-10-01	96-920001-79	28-25-10-022	96-940000-10	76-10-01
96-920001-285	73-10-01	96-920001-8	28-10-10	96-940000-5	76-10-01-019
96-920001-285	28-10-01	96-920001-81	28-10-10-014	96-940000-69	76-10-01
96-920001-285	28-10-10	96-920001-82	28-10-10	96-940000-73	76-10-01-011
96-920001-285	28-20-01	96-920001-87	28-10-01-006	96-940000-75	76-10-01-021
96-920001-285	28-25-10	96-920001-88	28-10-01	96-940000-75	76-12-01-028
96-920001-287	28-20-01	96-920001-89	28-25-10-024	96-940000-9	76-10-01-031
96-920001-289	28-20-01	96-920001-89	28-20-01-035	96-940000-9	76-12-01-020
96-920001-291	28-20-01	96-920001-9	28-10-10-018	96-940001	76-12-01
96-920001-292	28-20-01	96-920001-93	28-20-01-030	96-940010	76-10-01
96-920001-293	28-20-01	96-920001-97	28-10-10-022	96-940012-1	78-12-01-008
96-920001-294	28-20-01	96-920010-1	71-72-01-012	96-940012-5	78-13-01-021
96-920001-297	28-20-01-060	96-920010-1	71-70-01	96-940018	76-12-01-040
96-920001-299	28-20-01	96-920010-3	71-70-01	96-940019-1	76-12-01-038
96-920001-3	28-10-10-003	96-920010-3	71-72-01	96-940019-3	76-12-01-029
96-920001-301	28-20-01	96-920010-5	71-72-01-022	96-940019-3	76-12-01-034

PART NUMBER	CHAP/SUB-SECT/UNIT & ITEM	PART NUMBER	CHAP/SUB-SECT/UNIT & ITEM	PART NUMBER	CHAP/SUB-SECT/UNIT & ITEM
96-940020-1	61-24-01	96-950004-27	78-13-01-006	96-960007-614	30-60-10
96-940021	76-10-01-012	96-950004-29	78-13-01-003	96-960008	30-60-01
96-940022	61-24-01-015	96-950004-3	78-13-01	96-960008-1	30-60-01
96-940025	76-15-01	96-950004-31	78-13-01-004	96-960008-1	61-10-02
96-940026	76-15-01	96-950004-33	78-13-01-001	96-960008-1	61-12-01
96-940026-1	76-15-01	96-950004-35	78-13-01-002	96-960008-1	71-02-01
96-940027	76-15-01	96-950004-39	78-13-01	96-960008-1	71-00-02
96-940027-1	76-15-01	96-950004-49	78-13-01-024	96-960008-1	71-00-03
96-940028	76-15-01-022	96-950004-5	78-13-01	96-960008-13	30-60-01
96-940028-1	76-15-01	96-950004-55	78-13-01-008	96-960008-15	30-60-01
96-940029	76-15-01-018	96-950004-57	78-13-01-009	96-960008-15	71-02-01
96-940029-1	76-15-01	96-950004-59	78-13-01	96-960008-15	61-12-03
96-950000-10	78-10-01	96-950004-61	78-13-01	96-960008-21	61-12-01
96-950000-27	78-10-01-012	96-950004-7	78-13-01	96-960008-3	30-60-01-022
96-950000-29	78-10-01-013	96-950004-9	78-13-01	96-960008-601	30-60-01
96-950000-43	78-10-01-008	96-950011	78-12-01-015	96-960008-601	71-02-01
96-950000-44	78-10-01	96-950011	78-10-01-018	96-960008-601	61-12-03
96-950000-45	78-10-01	96-950013-10	78-13-01-019	96-960008-605	30-60-01
96-950000-46	78-10-01	96-950013-9	78-13-01-018	96-960008-610	71-02-02
96-950000-47	78-10-01	96-960006	30-60-01	96-960008-610	71-02-01
96-950000-48	78-10-01	96-960006-11	30-60-01-043	96-960008-610	61-12-02
96-950000-51	78-10-01	96-960006-13	30-60-01	96-960008-611	61-12-04
96-950000-52	78-10-01	96-960006-18	30-60-01	96-960008-611	71-02-02
96-950000-61	78-10-01	96-960006-18	61-10-01	96-960008-611	71-02-01
96-950000-62	78-10-01	96-960006-18	71-00-01	96-960008-7	30-60-01-045
96-950000-63	78-10-01	96-960006-25	30-60-01	96-960008-85	30-40-01
96-950000-64	78-10-01	96-960006-27	30-60-01	96-960009-604	61-10-04
96-950000-65	78-10-01	96-960006-29	30-60-01	96-960009-604	71-00-03
96-950000-66	78-10-01	96-960006-29	61-10-02	96-960009-604	71-00-02
96-950000-67	78-13-01	96-960006-29	71-00-01	96-960009-606	61-10-04
96-950000-9	78-10-01-001	96-960006-29	71-00-02	96-960009-606	71-00-03
96-950002-31	78-10-01-006	96-960006-3	30-60-01-036	96-960010-606	71-02-01
96-950002-31	78-12-01-005	96-960006-31	30-60-01-040	96-960010-606	71-02-02
96-950002-33	78-12-01-004	96-960006-39	30-60-01-046	96-960010-606	61-12-03
96-950002-33	78-10-01-005	96-960006-41	30-60-01	96-960010-654	61-12-03
96-950002-47	78-10-01-004	96-960006-5	30-60-01-035	96-960010-654	71-02-02
96-950002-47	78-12-01-003	96-960006-55	30-40-01	96-960010-654	71-02-01
96-950002-55	78-12-01-006	96-960006-603	30-60-01	96-960011	61-24-01
96-950002-55	78-10-01-009	96-960006-603	61-10-01	96-960011-11	61-24-01-018
96-950002-57	78-10-01	96-960006-603	71-00-01	96-960011-13	61-24-01
96-950002-57	78-12-01	96-960006-604	71-00-01	96-960011-15	61-24-01-016
96-950002-59	78-12-01-007	96-960006-604	71-00-03	96-960011-17	61-24-01
96-950002-59	78-10-01-010	96-960006-604	71-00-02	96-960011-3	61-24-01-007
96-950002-61	78-10-01	96-960006-604	61-10-02	96-960011-4	61-24-01
96-950002-61	78-12-01	96-960006-604	61-12-01	96-960011-5	61-24-01-001
96-950002-69	78-10-01-011	96-960006-604	30-60-01	96-960011-7	61-24-01-010
96-950002-7	78-10-01-003	96-960006-604	71-02-01	96-960012	30-60-10-034
96-950002-7	78-12-01-002	96-960006-608	61-10-03	96-960020-1	30-64-01
96-950002-71	78-10-01-016	96-960006-608	71-00-03	96-960020-3	30-64-01
96-950002-71	78-13-01-014	96-960006-608	71-00-03	96-960020-5	30-64-01
96-950002-72	78-13-01	96-960006-610	71-00-03	96-960020-602	30-64-01
96-950002-73	78-13-01-012	96-960006-610	61-10-05	96-960020-602	71-02-01
96-950002-73	78-10-01-014	96-960006-7	30-60-01	96-960020-602	71-02-02
96-950002-75	78-10-01	96-960006-9	39-14-01-036	96-960020-602	61-12-04
96-950002-77	78-10-01	96-960007-13	30-60-10-021	96-960020-7	30-64-01
96-950002-79	78-12-01	96-960007-19	30-60-10	96-960020-9	30-64-01
96-950002-79	71-02-02	96-960007-27	30-60-10	96-960020-9	71-02-02
96-950002-79	71-02-01	96-960007-29	30-60-10	96-960020-9	71-02-01
96-950002-81	71-02-01	96-960007-3	30-60-10	96-960020-9	61-12-04
96-950002-81	71-02-02	96-960007-5	30-60-10	96-960021-1	30-64-01
96-950002-81	78-12-01	96-960007-602	30-60-10	96-960021-3	30-64-01
96-950002-83	78-12-01-011	96-960007-606	61-12-01	96-960021-5	30-64-01
96-950002-85	78-12-01-010	96-960007-606	71-02-01	96-960021-609	30-64-01
96-950002-86	78-12-01	96-960007-608	71-02-01	96-960021-609	71-02-01
96-950002-87	78-12-01-013	96-960007-608	61-12-01	96-960021-609	71-02-02
96-950002-9	78-12-01-001	96-960007-608	30-60-10	96-960021-609	61-12-02
96-950002-9	78-10-01-002	96-960007-612	30-60-10	96-960021-609	61-12-02
96-950004-1	78-13-01	96-960007-612	61-10-02	96-960021-7	30-64-01
96-950004-11	78-13-01	96-960007-612	71-00-02	96-960021-9	30-64-01
96-950004-13	78-13-01	96-960007-612	71-00-03	96-960021-9	71-02-02
96-950004-15	78-13-01	96-960007-614	71-00-02	96-960021-9	71-02-01
96-950004-25	78-13-01-005	96-960007-614	61-10-02	96-960022-1	30-62-01

PART NUMBER	CHAP/SUB-SECT/UNIT & ITEM	PART NUMBER	CHAP/SUB-SECT/UNIT & ITEM	PART NUMBER	CHAP/SUB-SECT/UNIT & ITEM
96-960022-11	30-62-01	96-970001-41	30-10-10-026	96-980001-10	54-10-01
96-960022-13	30-62-01	96-970001-45	30-10-10	96-980001-101	54-10-01
96-960022-15	30-62-01	96-970001-47	30-10-10-018	96-980001-105	54-10-01-015
96-960022-17	30-62-01	96-970001-47	30-10-20-011	96-980001-106	54-10-01
96-960022-19	30-62-01	96-970001-49	30-10-10-035	96-980001-107	54-10-01
96-960022-21	30-62-01	96-970001-51	30-10-20-016A	96-980001-108	54-10-01
96-960022-23	30-62-01	96-970001-51	30-10-10-054	96-980001-109	54-10-01
96-960022-25	30-62-01	96-970001-51	30-10-30-091	96-980001-11	54-30-01-005
96-960022-25	61-10-03	96-970001-53	30-10-10-009	96-980001-110	54-10-01
96-960022-25	71-00-03	96-970001-54	30-10-10	96-980001-113	54-30-01
96-960022-27	71-00-03	96-970001-55	30-10-10	96-980001-114	54-30-01
96-960022-27	61-10-05	96-970001-61	30-10-20-045	96-980001-12	54-30-01-006
96-960022-27	30-62-01	96-970001-61	30-10-10-020	96-980001-13	54-30-01-011
96-960022-3	30-62-01	96-970001-61	30-10-30-044	96-980001-13	54-10-01-056
96-960022-5	30-62-01	96-970001-63	30-10-10-002	96-980001-13	54-30-01-016
96-960022-601	30-62-01	96-970001-63	30-10-20-066	96-980001-14	54-30-01-015
96-960022-601	61-10-03	96-970001-65	30-10-20	96-980001-14	54-10-01
96-960022-601	71-00-03	96-970001-65	30-10-10	96-980001-14	54-30-01-012
96-960022-603	71-00-03	96-970001-67	30-10-10-046	96-980001-15	54-10-01-055
96-960022-603	61-10-05	96-970001-69	30-10-10-047	96-980001-16	54-10-01
96-960022-603	30-62-01	96-970001-71	30-10-10	96-980001-17	54-30-01-003
96-960022-7	30-62-01	96-970001-73	30-10-10	96-980001-18	54-30-01-004
96-960022-9	30-62-01	96-970001-77	30-10-10-023	96-980001-2	54-10-01
96-970001-1	30-10-10	96-970001-79	30-10-10	96-980001-21	54-10-01-059
96-970001-11	30-10-10-012	96-970001-85	30-10-10	96-980001-22	54-10-01
96-970001-11	30-10-20-019	96-970001-89	30-10-10	96-980001-25	54-30-01-007
96-970001-115	30-10-10	96-970001-95	30-10-10	96-980001-26	54-30-01-008
96-970001-117	30-10-10	96-970001-97	30-10-20-006	96-980001-3	54-10-01-011
96-970001-119	30-10-10	96-970002-1	30-10-20	96-980001-33	54-10-01-009
96-970001-131	30-10-10	96-970002-13	30-10-20-062	96-980001-34	54-10-01
96-970001-133	30-10-10	96-970002-15	30-10-20	96-980001-35	54-10-01-008
96-970001-135	30-10-10	96-970002-23	30-10-20-051	96-980001-35	61-24-01-006
96-970001-137	30-10-10	96-970002-25	30-10-20	96-980001-36	61-24-01
96-970001-141	30-10-10	96-970002-39	30-10-20-048	96-980001-36	54-10-01
96-970001-143	30-10-10-024	96-970002-41	30-10-20-046	96-980001-37	54-10-01-039
96-970001-149	30-10-10	96-970002-45	30-10-20-050	96-980001-38	54-10-01
96-970001-151	30-10-10	96-970002-47	30-10-20-068	96-980001-39	54-10-01-002
96-970001-153	30-10-10	96-970002-53	30-10-20-039	96-980001-40	54-10-01
96-970001-155	30-10-10	96-970002-71	30-10-20-041	96-980001-41	54-10-01-003
96-970001-157	30-10-10	96-970002-73	30-10-20-040	96-980001-42	54-10-01
96-970001-159	30-10-10	96-970002-79	30-10-20	96-980001-43	54-10-01-029
96-970001-161	30-10-10	96-970002-9	30-10-20	96-980001-44	54-10-01
96-970001-165	30-10-20-028	96-970004	30-10-30	96-980001-47	54-10-01-060
96-970001-165	30-10-10	96-970004-11	30-10-30-037	96-980001-49	54-10-01-038
96-970001-165	30-10-30-083	96-970004-17	30-10-30-060	96-980001-5	54-10-01
96-970001-167	30-10-30-082	96-970004-29	30-10-30-036	96-980001-50	54-10-01
96-970001-167	30-10-10-014	96-970004-33	30-10-30-059	96-980001-51	54-10-01-007
96-970001-167	30-10-20-026	96-970004-39	30-10-30-063	96-980001-52	54-10-01
96-970001-171	30-10-20-027	96-970004-41	30-10-30-062	96-980001-53	54-10-01-006
96-970001-171	30-10-10-015	96-970004-5	30-10-30-058	96-980001-54	54-10-01
96-970001-171	30-10-30-086	96-970004-67	30-10-30	96-980001-55	54-10-01
96-970001-173	30-10-10	96-970004-7	30-10-30-066	96-980001-57	54-10-01-028
96-970001-19	30-10-10	96-970004-71	30-10-30-093	96-980001-58	54-10-01
96-970001-19	30-10-30-052	96-970004-73	30-10-30-050	96-980001-59	54-10-01-031
96-970001-19	30-10-20-055A	96-970004-77	30-10-30-056	96-980001-60	54-10-01
96-970001-195	30-10-20-008	96-970004-79	30-10-30-071	96-980001-601	54-10-01
96-970001-195	30-10-30-040	96-970005-10	30-10-30-068	96-980001-601	57-10-01-028
96-970001-196	30-10-30-051	96-970005-11	30-10-30-065	96-980001-602	57-10-01
96-970001-196	30-10-20-017	96-970005-13	30-10-30-072	96-980001-602	54-10-01
96-970001-21	30-10-20-047	96-970005-15	30-10-30-080	96-980001-605	54-10-01
96-970001-21	30-10-30-053	96-970005-17	53-17-01-024	96-980001-606	54-10-01
96-970001-21	30-10-10	96-970005-19	30-10-30-088	96-980001-609	54-10-01
96-970001-23	30-10-10-006	96-970005-21	30-10-30-079	96-980001-609	57-10-01
96-970001-27	30-10-10	96-970005-29	30-10-30-073	96-980001-61	54-10-01-058
96-970001-31	30-10-10-036	96-970005-31	30-10-30-076	96-980001-610	54-10-01
96-970001-33	30-10-10-008	96-970005-5	30-10-30-069	96-980001-610	57-10-01
96-970001-33	30-10-30-042	96-970005-7	30-10-30-089	96-980001-62	54-10-01
96-970001-33	30-10-20-055	96-970005-9	30-10-30-070	96-980001-69	54-10-01-027
96-970001-35	30-10-10-040	96-970012	30-10-20-020	96-980001-7	54-10-01-016
96-970001-37	30-10-10	96-970012	30-10-10-050	96-980001-71	54-50-01-002
96-970001-39	30-10-10	96-980001-1	54-10-01	96-980001-72	54-50-01
96-970001-41	30-10-20-052	96-980001-10	54-30-01-010	96-980001-73	54-50-01-001

PART NUMBER	CHAP/SUB-SECT/UNIT & ITEM	PART NUMBER	CHAP/SUB-SECT/UNIT & ITEM	PART NUMBER	CHAP/SUB-SECT/UNIT & ITEM
96-980001-74	54-50-01	96-980002-16	30-10-20-012	99-530073-14	25-23-01
96-980001-75	54-10-01-045	96-980002-16	54-30-01	99-530073-14	25-23-01
96-980001-79	54-10-01-046	96-980002-16	54-10-01	99-530073-15	25-23-01
96-980001-8	54-10-01	96-980010	54-10-01	99-530073-15	25-23-01-107
96-980001-83	54-10-01-044	96-980011	54-10-01-022	99-530073-15	25-23-01-121
96-980001-83	54-30-01-001	96-980012	54-10-01-017	99-530073-15	25-23-01
96-980001-84	54-30-01-002	96-980012-1	54-10-01	99-620019	27-30-11-012
96-980001-84	54-10-01	98-2MS	53-15-01-004	99785-2	25-28-01
96-980001-85	54-10-01-050	98-32176	25-10-01	99833P098	30-60-01
96-980001-9	54-10-01-047	98-34350	25-10-01	99836	52-35-01
96-980001-9	54-30-01-009	98265-1-090	30-60-01-020	99836	30-60-01
96-980001-91	54-10-01	98265-2-180	71-12-01-041	99836	25-22-02
96-980001-92	54-10-01	98265-2-180	71-66-01-025	99836	53-50-10
96-980001-95	54-10-01	98265-2-190	71-12-01	99836	71-66-01
96-980001-95	54-10-01-025	98265-2-210	71-12-01-042	99871P098	53-11-01-045
96-980001-96	54-10-01	98265-2-210	71-66-01	99871P098	24-30-20-006
96-980001-97	54-10-01	98265-2-230	71-12-01	99871P098	25-28-01
96-980002-13	54-10-01	98292-1-090	25-22-02	99947P130	52-35-01
96-980002-14	54-10-01	98292-2-170	53-50-10-021	99947P130	53-11-01-069
96-980002-15	54-10-01	98293-1-070	25-28-01	99947P130	53-11-01
96-980002-15	54-30-01	9899	52-35-02	99947P130	53-50-10
96-980002-15	30-10-20-007	99-530073-14	25-23-01	99947P130	71-66-01-022

CHAPTER

11

PLACARDS AND MARKINGS

LIST OF PAGES & TABLE OF CONTENTS FOR CHAPTER 11-00-00 REQ. PLACARDS

CHAP/SUB-SECT & UNIT	PAGE NO.	EFFECTIVE DATE	TABLE OF CONTENTS
11-00-00	1	04/05/85	LIST OF PAGES & TABLE OF CONTENTS
11-20-01	1	03/10/78	EXTERIOR PLACARDS
11-20-01	2	03/10/78	TC-1 THRU TC-1607,TE-1 THRU TE-767
11-20-01	3	04/30/84	
11-20-01	4	03/10/78	
11-20-01	5	04/30/84	
11-20-01	6	03/10/78	
11-20-01	7	04/05/85	
11-20-10	1	03/10/78	EXTERIOR PLACARDS
11-20-10	2	03/10/78	TE-768 THRU TE-942 EXCEPT TE-938
11-20-10	3	04/05/85	
11-20-10	4	03/10/78	
11-20-10	5	04/30/84	
11-30-01	1	03/10/78	INTERIOR PLACARDS
11-30-01	2	03/10/78	TC-1 THRU TC-1607,TE-1 THRU TE-767
11-30-01	3	04/05/85	
11-30-01	4	03/10/78	
11-30-01	5	04/05/85	
11-30-01	6	03/10/78	
11-30-01	7	04/05/85	
11-30-10	1	03/10/78	INTERIOR PLACARDS
11-30-10	2	03/10/78	TE-768 THRU TE-942 EXCEPT TE-938
11-30-10	3	03/10/78	
11-30-10	4	03/10/78	
11-30-10	5	03/10/78	
11-30-10	6	03/10/78	
11-30-10	7	03/10/78	
11-30-10	8	03/10/78	
11-30-10	9	04/05/85	
11-30-10	10	03/10/78	
11-30-10	11	04/05/85	

11-20-01
EXTERIOR PLACARDS
TC-1 THRU TC-1607,TE-1 THRU TE-767

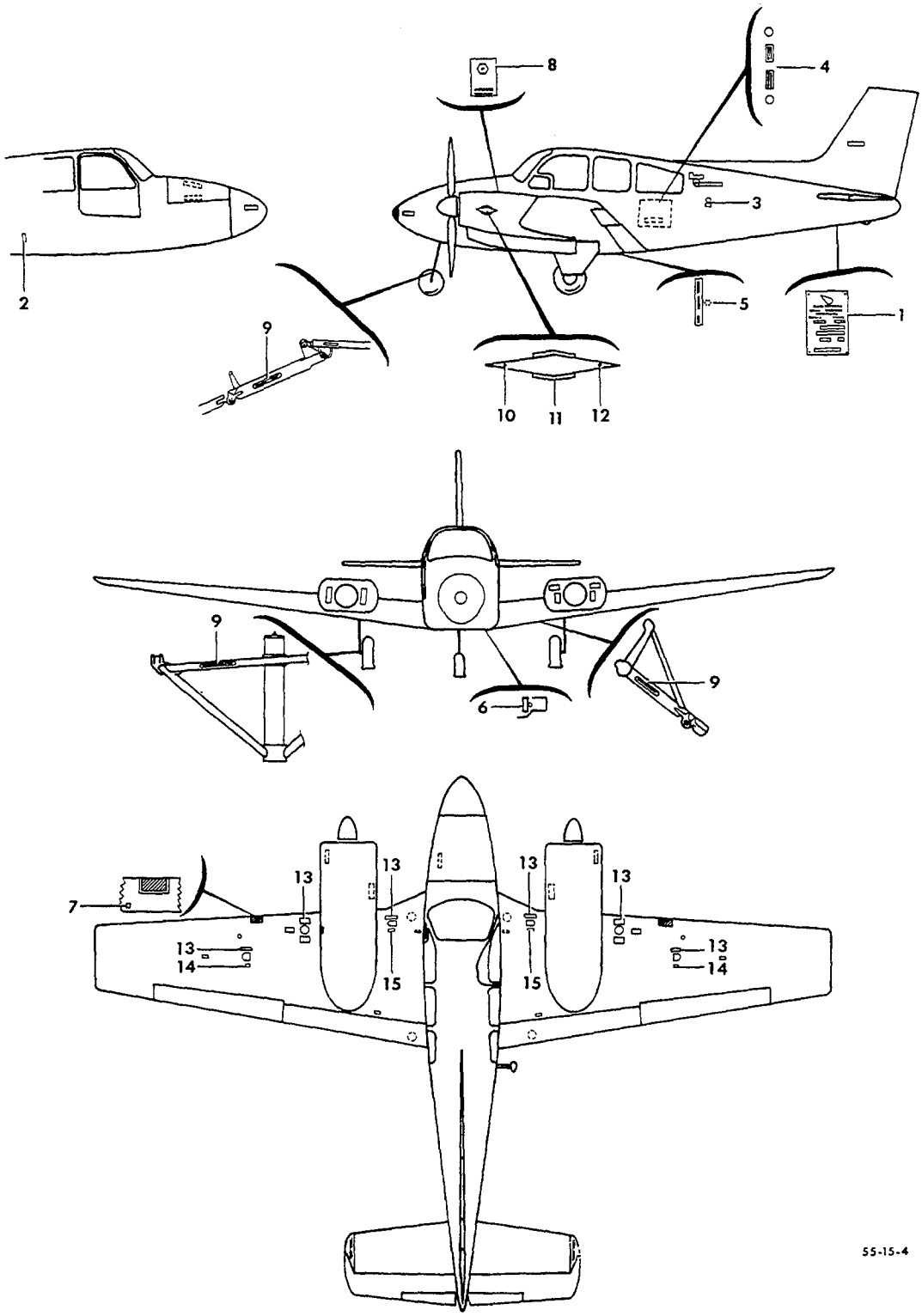

FIGURE 20-01.EXTERIOR PLACARDS
/SHEET 1 OF 3 SHEETS/

SUB-SECT UNIT & ITEM NO.	PART NO.	DESCRIPTION 1 2 3 4 5 6 7	UNITS PER ASSY	USABLE ON CODE
20-01	95-000011	MARKINGS INSTL,EXTERIOR	NP	1
	96-000019	MARKINGS INSTL,EXTERIOR	NP	2
	96-000036	MARKINGS INSTL,EXTERIOR	NP	3
	96-000011	MARKINGS INSTL,EXTERIOR	NP	4
		/THROTTLE,PROP AND MIXTURE/		
- 1	111745	. PLACARD,MODEL & SERIAL NUMBER	1	6
- 2	130728	. PLACARD,MODEL & SERIAL NUMBER	1	7
	111745	. PLACARD,MODEL & SERIAL NUMBER	1	7
		/ALTERNATE FOR 130728/		
- 3	35-410286B-C	. PLACARD,STATIC AIR VENT/BLACK ON CLEAR/ . . .	2	5
	35-410286W-C	. PLACARD,STATIC AIR VENT/WHITE ON CLEAR/ . . .	2	5
- 4	35-410169B-C	. PLACARD,LEVEL POINT/BLACK ON CLEAR/	2	5
	35-410169W-C	. PLACARD,LEVEL POINT/WHITE ON CLEAR/	2	5
- 5	112736B-C	. PLACARD,JACK ATTACH POINT/BLACK ON CLEAR/ . .	1	5
	112736W-C	. PLACARD,JACK ATTACH POINT/WHITE ON CLEAR/ . .	1	5
- 6	112735B-C	. PLACARD,JACK PAD/BLACK ON CLEAR/.	2	5
	112735W-C	. PLACARD,JACK PAD/WHITE ON CLEAR/.	2	5
- 7	35-361016	. PLACARD,WING GROUND HERE.	2	8
- 8	35-361016-1	. PLACARD,FUSELAGE GROUND HERE.	1	8
- 9	112734	. PLACARD,HEAT TREATED ASSEMBLY	5	5
- 10	35-000064-31	. PLATE,EXTERIOR IDENTIFICATION	2	9
- 11	35-000064-33	. PLATE,EXTERIOR IDENTIFICATION	2	10
	R 35-000064-39	. PLATE,EXTERIOR IDENTIFICATION	NP	11
		/ATTACHING PARTS/		
- 12	AN507UB632R	. SCREW	2	
	AN960-6L	. WASHER.	2	
	MS20364-632	. NUT	2	
	A109-014-1	. NUT,SPEED	2	
		——*——		
	96-000125-1	. DECAL,BARON	2	12
	96-000125-3	. DECAL,BARON/ALTERNATE FOR 96-000125-1/. . . .	2	12
	96-000132	. EMBLEM,BARON.	2	13
		/ATTACHING PARTS/		
	MS24693S26	. SCREW	2	
	AN960-6	. WASHER.	2	
	MS20364-632	. NUT	2	
		——*——		
- 13	50-921526-1	. PLACARD,FUEL GRADE 100/130 OCTANE/WHITE/. . .	6	5
	50-921526-3	. PLACARD,FUEL GRADE 100/130 OCTANE/BLACK/. . .	6	5
- 14	R 95-921013-1W-C	. DECAL,FUEL TANK ID/FUEL 31 US GAL/WHITE/. . .	2	5
	R 95-921019-1	. DECAL,FUEL TANK ID/FUEL 17 US GAL/WHITE/. . .	2	14
	R 95-921013-3	. DECAL,FUEL TANK ID/FUEL 31 US GAL/BLACK/. . .	2	5
	R 95-921019-3	. DECAL,FUEL TANK ID/FUEL 17 US GAL/BLACK/. . .	2	14
- 15	R 95-921012-1	. DECAL,FUEL TANK ID/FUEL 25 US GAL/WHITE/. . .	2	15
	R 58-920034-29	. DECAL,FUEL TANK ID/FUEL 25 US GAL/22 USABLE/.	2	16
		/WHITE/		
	R 95-921012-3	. DECAL,FUEL TANK ID/FUEL 25 US GAL/BLACK/. . .	2	15
	R 58-920034-31	. DECAL,FUEL TANK ID/FUEL 25 US GAL/22 USABLE/.	2	16
		/BLACK/		

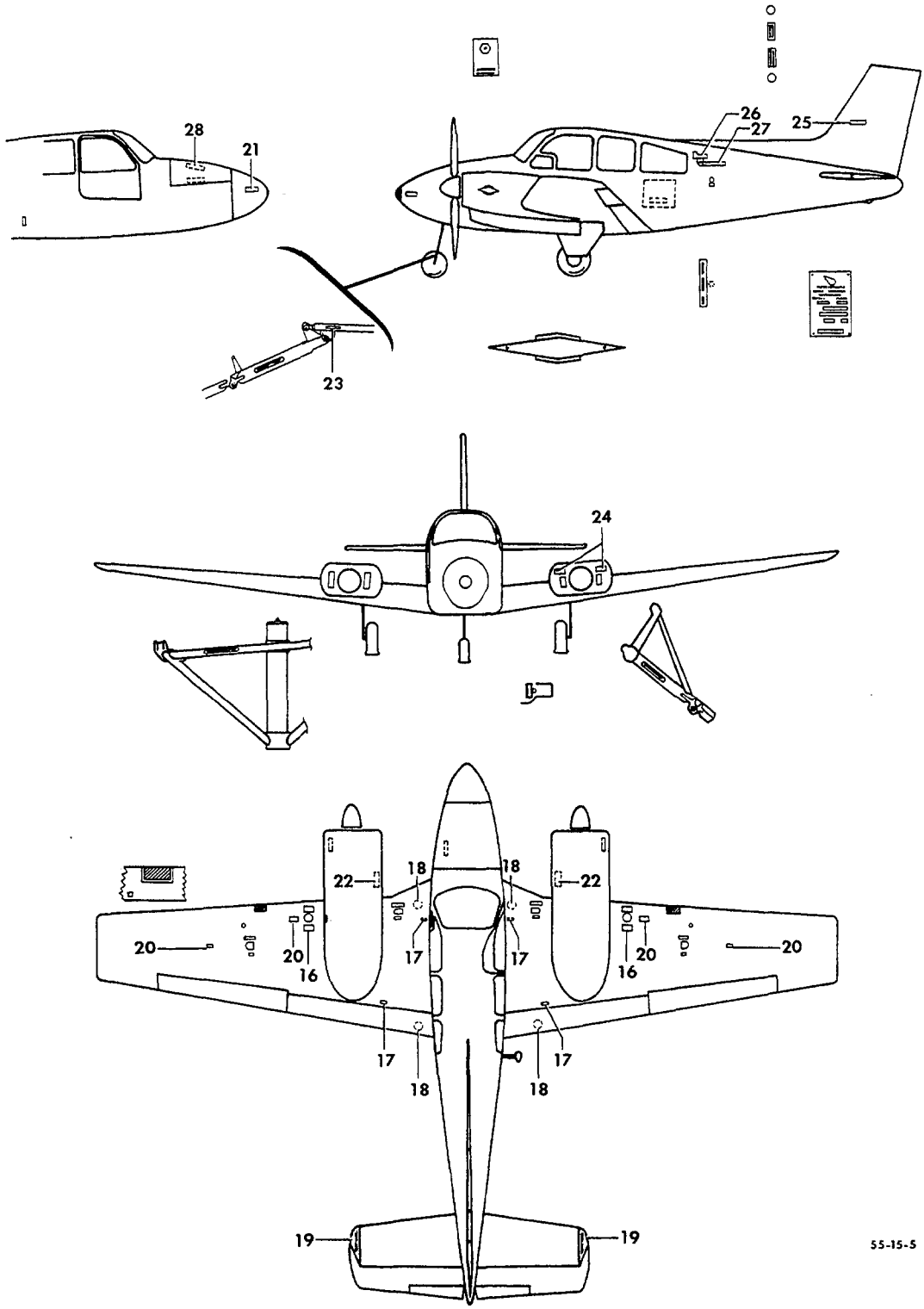

FIGURE 20-01.EXTERIOR PLACARDS
/SHEET 2 OF 3 SHEETS/

SUB-SECT UNIT & ITEM NO.	PART NO.	DESCRIPTION 1 2 3 4 5 6 7	UNITS PER ASSY	USABLE ON CODE
20-01 - 16	R 95-921018-1	. DECAL,FUEL TANK ID/FUEL 39 US GAL/WHITE/. . .	2	1
	R 95-921020-1	. DECAL,FUEL TANK ID/FUEL 40 US GAL/WHITE/. . .	2	17
	R 58-920034-21	. DECAL,FUEL TANK ID/FUEL 40 US GAL/37 USABLE/. /WHITE/	2	16
	R 95-921018-3	. DECAL,FUEL TANK ID/FUEL 39 US GAL/BLACK/. . .	2	1
	R 95-921020-3	. DECAL,FUEL TANK ID/FUEL 40 US GAL/BLACK/. . .	2	17
	R 58-920034-23	. DECAL,FUEL TANK ID/FUEL 40 US GAL/37 USABLE/. /BLACK/	2	16
- 17	35-924148B-C	. PLACARD,FUEL DRAIN/BLACK ON CLEAR/.	4	5
	35-924148W-C	. PLACARD,FUEL DRAIN/WHITE ON CLEAR/.	4	5
- 18	112733-2	. PLACARD,NO STEP/BLACK/.	4	5
	112733-4	. PLACARD,NO STEP/RED/.	4	5
- 19	115081-5	. PLACARD,NO HANDLE/BLACK,SUPERSEDES 115081-1/.	2	5
	115081-7	. PLACARD,NO HANDLE/RED,SUPERSEDES 115081-3/. .	2	5
- 20	95-921016-1	. PLACARD,FUEL NOZZLE CAUTION/WHITE/.	4	5
	95-921016-3	. PLACARD,FUEL NOZZLE CAUTION/BLACK/.	4	5
- 21	95-410035B-C	. PLACARD,DO NOT PUSH/BLACK ON CLEAR.	2	5
	95-410035-1W-C	. PLACARD,DO NOT PUSH/WHITE ON CLEAR/	2	5
- 22	95-921014-1	. PLACARD,FUEL STRAINER DRAIN/WHITE/.	2	5
	95-921014-3	. PLACARD,FUEL STRAINER DRAIN/BLACK/.	2	5
- 23	35-825192	. PLACARD,NOSE GEAR RETRACT LINK ROD.	1	1
	36-820012	. PLACARD,NOSE GEAR RETRACT LINK ROD.	1	14
	96-820036	. DECAL,PIN INSTRUCTION	1	4
- 24	95-910020	. PLACARD,MAGNETO DISCONNECT.	4	5
- 25	115098-2	. PLACARD,BEECHCRAFT/WHITE SMALL/	2	1
	115098-4	. PLACARD,BEECHCRAFT/BLACK SMALL/	2	1
	115098-3	. PLACARD,BEECHCRAFT/WHITE LARGE/ . . . . . /SUPERSEDES 115098-1/	2	19
	115098-5	. PLACARD,BEECHCRAFT/BLACK LARGE/	2	19
- 26	130071	. EMBLEM,BEECHCRAFT	2	5
- 27	96-000017	. EMBLEM,BARON.	2	20
	96-000021	. EMBLEM,BARON B55.	2	21
	96-000125-5	. DECAL,B55	2	12
	96-000125-7	. DECAL,B55/ALTERNATE FOR 96-000125-5/.	2	12
	96-000128	. EMBLEM,B55.	2	13
	96-000022	. EMBLEM,BARON C55.	2	22
	96-000030	. EMBLEM,D55. . . . . /ATTACHING PARTS/	2	23
	AN507-632R	. SCREW	4	
	AN960-6L	. WASHER.	4	
	MS20365-632	. NUT	4	
	A109-014-1	. NUT	2	
		----*----		
	35-815153	. PLACARD,DOOR HINGE BOLT DIRECTION	2	5
	130069	. CHARACTERS,EXTERNAL LICENSE	AR	5
- 28	96-534043	. PLACARD,NOSE BAGGAGE LOADING LIMIT.	1	20
	96-534062	. PLACARD,NOSE BAGGAGE LOADING LIMIT.	1	24
	96-534068	. PLACARD,NOSE BAGGAGE LOADING LIMIT. . . . . /ATTACHING PARTS/	1	4
	AN515-6R8	. SCREW	2	
	AN960-6	. WASHER.	2	
	MS20365-632	. NUT	2	
		----*----		
	96-160006-3	. PLACARD,FLAP POSITION/20 DEGREE/.	1	5

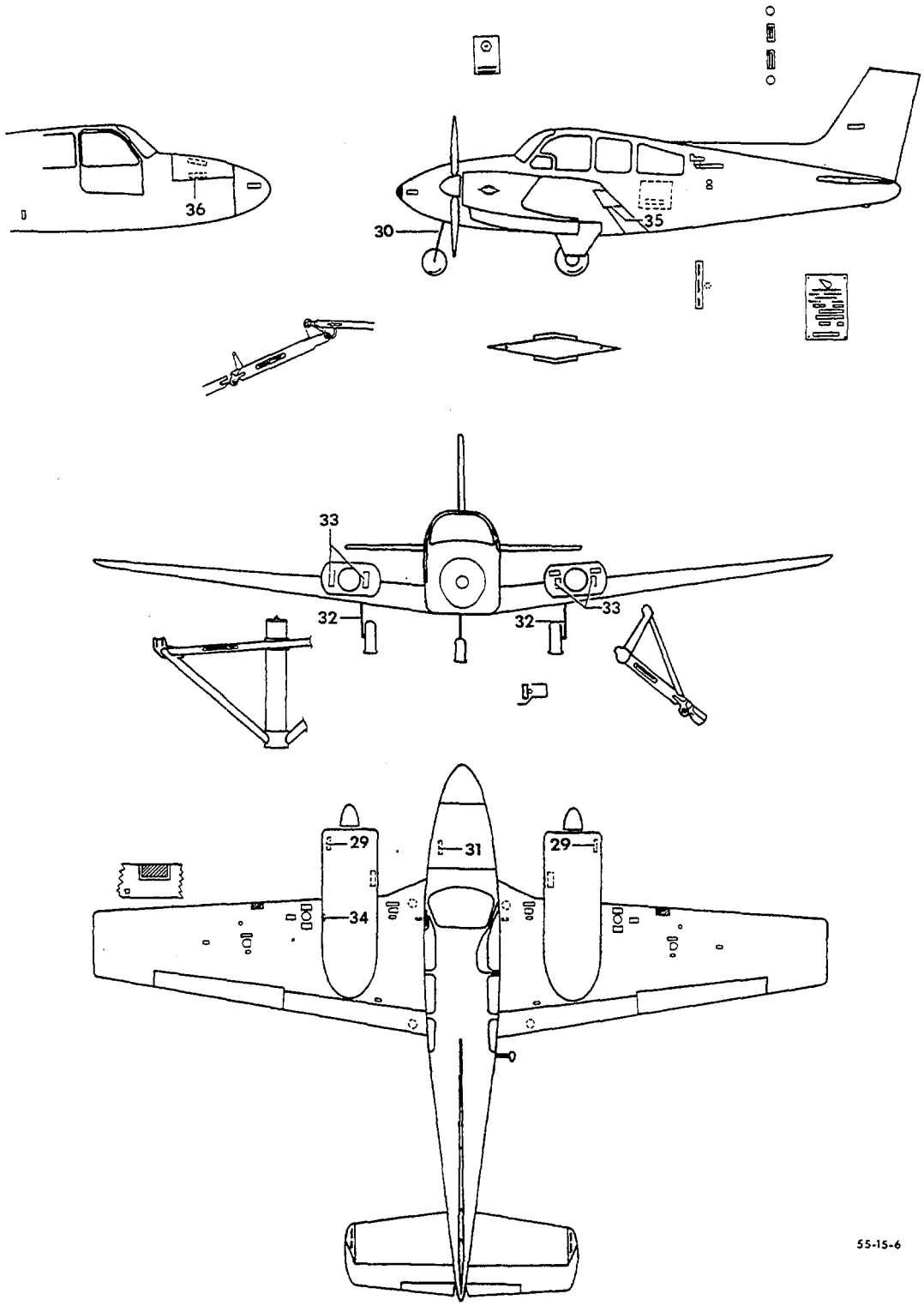

FIGURE 20-01.EXTERIOR PLACARDS
/SHEET 3 OF 3 SHEETS/

SUB-SECT UNIT & ITEM NO.	PART NO.	DESCRIPTION 1 2 3 4 5 6 7	UNITS PER ASSY	USABLE ON CODE
20-01 - 29	35-939181	PLACARD,OIL WEIGHT.	2	5
- 30	95-824017	PLACARD,NOSE SHOCK STRUT.	1	25
	96-820031	PLACARD,NOSE SHOCK STRUT.	1	26
	96-820032	PLACARD,NOSE SHOCK STRUT.	1	27
- 31	95-960015	PLACARD,PROP ANTI-ICER TANK	1	5
- 32	112406	PLACARD,MAIN GEAR PATENT.	2	5
- 33	35-590080	PLACARD,NOSE COWL WINTER BAFFLE	2	5
- 34	112700	PLACARD,24 VOLT EXTERNAL POWER.	1	5
- 35	R 103637	PLACARD,AILERON	2	5
- 36	95-410036	PLACARD,BAGGAGE DOOR LOCK	1	5

CODES OF EFFECTIVITY

1	TC-1 THRU TC-501	2	TC-502 THRU TC-1042
3	TC-1043 THRU TC-1607	4	TE-1 THRU TE-767
5	TC-1 THRU TC-1607 TE-1 THRU TE-767	6	TC-1 THRU TC-1035 TE-1 THRU TE-410
7	TC-1036 THRU TC-1607 TE-411 THRU TE-767	8	TC-76 THRU TC-329
9	TC-1 THRU TC-329	10	TC-1 THRU TC-189
11	TC-190 THRU TC-329	12	TC-1299 THRU TC-1374
13	TC-1375 THRU TC-1607	14	TC-502 THRU TC-1607
15	TC-1 THRU TC-1425 TE-1 THRU TE-767	16	TC-1426 THRU TC-1505
17	TC-502 THRU TC-1425 TE-1 THRU TE-767	18	DELETED
19	TC-502 THRU TC-1607 TE-1 THRU TE-767	20	TC-1 THRU TC-954
21	TC-955 THRU TC-1298	22	TE-1 THRU TE-451
23	TE-452 THRU TE-767	24	TC-955 THRU TC-1607
25	TC-1 THRU TC-1607 TE-1 THRU TE-300	26	TE-301 THRU TE-405
27	TE-406 THRU TE-767		

"END"

11-20-10
EXTERIOR PLACARDS
TE-768 THRU TE-942 EXCEPT TE-938

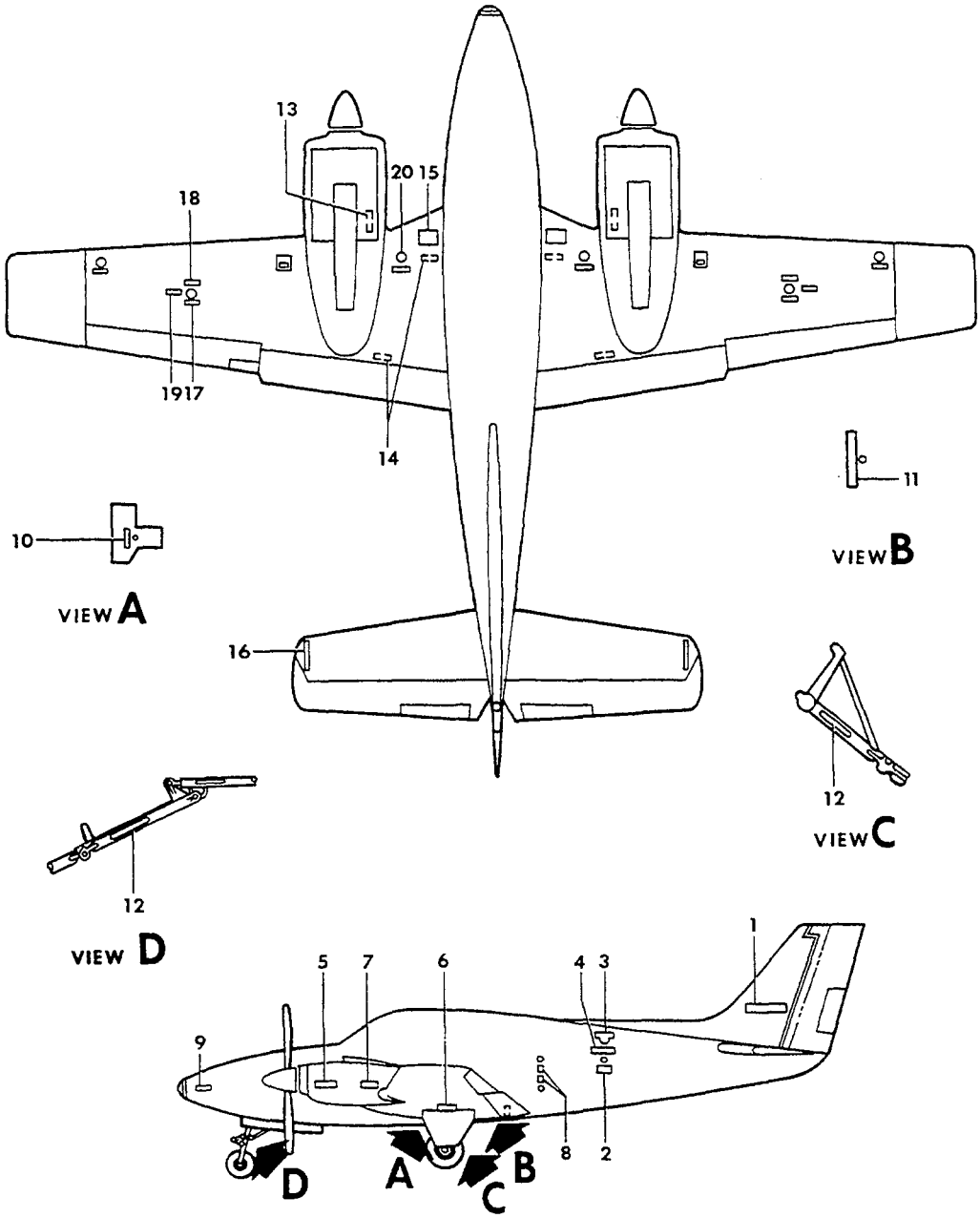

S5-15-7

FIGURE 20-10.EXTERIOR PLACARDS
/SHEET 1 OF 2 SHEETS/

SUB-SECT UNIT & ITEM NO.	PART NO.	DESCRIPTION 1 2 3 4 5 6 7	UNITS PER ASSY	USABLE ON CODE
20-10	96-000011	MARKINGS INSTL,EXTERIOR	NP	1
	96-000037-1	MARKINGS INSTL,EXTERIOR	NP	2
- 1	115098-5	. DECAL,BEECHCRAFT.	2	3
- 2	35-410286B-C	. PLACARD,STATIC AIR FITTING/BLACK ON CLEAR/. .	2	3
	35-410286W-C	. PLACARD,STATIC AIR FITTING/WHITE ON CLEAR/. .	2	3
- 3	130071	. EMBLEM,BEECHCRAFT	2	3
- 4	96-000126-5	. DECAL,E55	2	4
	96-000126-7	. DECAL,E55	2	4
	96-000129	. EMBLEM,E55/METAL/	2	3
- 5	96-000126-1	. DECAL,BARON	2	4
	96-000126-3	. DECAL,BARON	2	4
	96-000132-1	. EMBLEM,BARON/METAL/	2	3
- 6	35-815153	. PLACARD,DOOR HINGE BOLT DIRECTION/LH & RH/. .	2	3
- 7	95-910020	. PLACARD,MAGNETO DISCONNECT.	4	3
- 8	R 35-410169W-C	. PLACARD,LEVEL POINT/WHITE ON CLEAR/	2	3
- 9	95-410035B-C	. PLACARD,NO PUSH/BLACK ON CLEAR/	2	3
	95-410035W-C	. PLACARD,NO PUSH/WHITE ON CLEAR/	2	3
	96-534068-1	. PLACARD,NOSE BAGGAGE COMPARTMENT LOADING. . .	1	3
- 10	112735B-C	. PLACARD,JACK PAD/BLACK ON CLEAR/.	2	3
	112735W-C	. PLACARD,JACK PAD/WHITE ON CLEAR/.	2	3
- 11	112736B-C	. PLACARD,JACK ATTACH POINT/BLACK ON CLEAR/ . .	1	3
	112736W-C	. PLACARD,JACK ATTACH POINT/WHITE ON CLEAR/ . .	1	3
- 12	112734	. PLACARD,HEAT TREAT ASSY	4	3
- 13	95-921014-1	. PLACARD,FUEL STRAINER/WHITE/.	2	3
	95-921014-3	. PLACARD,FUEL STRAINER/BLACK/.	2	3
- 14	35-924148	. PLACARD,FUEL CELL DRAIN	4	3
- 15	112733-2	. PLACARD,NO STEP/BLACK/.	4	3
	112733-4	. PLACARD,NO STEP/RED/.	4	3
- 16	115081-5	. PLACARD,NO HANDLE/BLACK/.	2	3
	115081-7	. PLACARD,NO HANDLE/RED/.	2	3
- 17	95-921013-1	. PLACARD,FUEL TANK CAPACITY 31 GAL/BLACK/. . .	2	3
	95-921013-3	. PLACARD,FUEL TANK CAPACITY 31 GAL/WHITE/. . .	2	3
- 18	50-921526-1	. PLACARD,FUEL GRADE 100/130 OCTANE/WHITE/. . .	2	3
	50-921526-3	. PLACARD,FUEL GRADE 100/130 OCTANE/BLACK/. . .	2	3
- 19	95-921016-1	. PLACARD,FUEL NOZZLE CAUTION/WHITE/.	2	3
	95-921016-3	. PLACARD,FUEL NOZZLE CAUTION/BLACK/.	2	3
- 20	95-921012-1	. PLACARD,FUEL TANK CAPACITY 25 GAL/WHITE/. . .	2	5
	58-920034-29	. DECAL,FUEL TANK CAPACITY 25 GAL,22 USABLE . . /WHITE,SUPERSEDES 96-924030-1 PLACARD/	2	6
	58-920034-31	. DECAL,FUEL TANK CAPACITY 25 GAL,22 USABLE . . /BLACK,SUPERSEDES 96-924030-0 PLACARD/	2	6
	58-920034-25	. PLACARD,FUEL TANK CAPACITY 25 GAL,22 USABLE . /WHITE/	2	7
	58-920034-27	. PLACARD,FUEL TANK CAPACITY 25 GAL,22 USABLE . /BLACK/	2	7

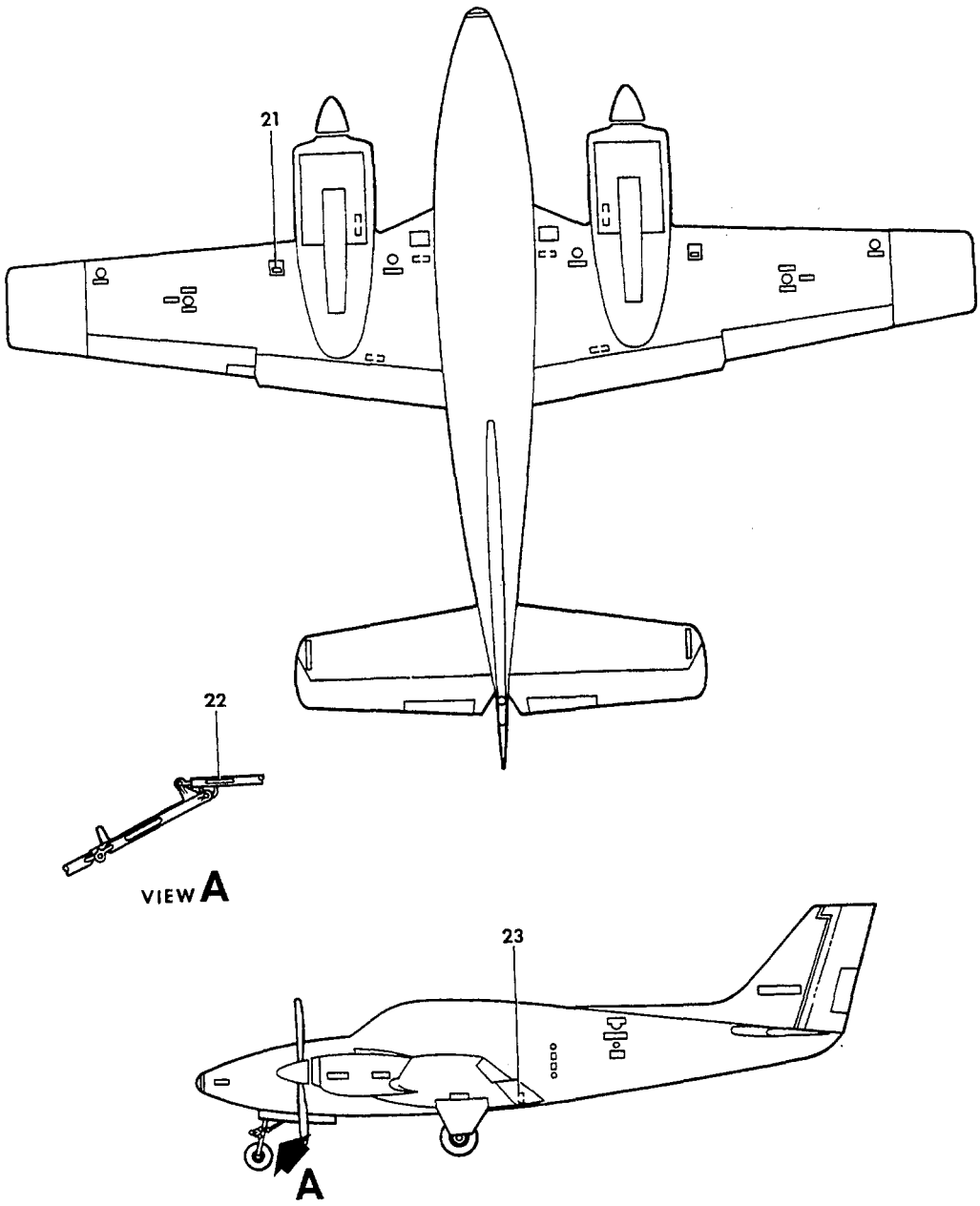

55-15-8

FIGURE 20-10.EXTERIOR PLACARDS
/SHEET 2 OF 2 SHEETS/

SUB-SECT UNIT & ITEM NO.	PART NO.	DESCRIPTION 1 2 3 4 5 6 7	UNITS PER ASSY	USABLE ON CODE
20-10 - 21	95-921020-1	. DECAL,FUEL TANK CAPACITY 40 GAL/WHITE/. . . .	2	5
	95-921020-3	. DECAL,FUEL TANK CAPACITY 40 GAL/BLACK/. . . .	2	5
	58-920034-21	. DECAL,FUEL TANK CAPACITY 40 GAL,37 USABLE . . /WHITE,SUPERSEDES 96-924030-9 PLACARD/	2	6
	58-920034-23	. DECAL,FUEL TANK CAPACITY 40 GAL,37 USABLE . . /BLACK,SUPERSEDES 96-924030-11 PLACARD/	2	6
	58-920034-17	. PLACARD,FUEL TANK CAPACITY 40 GAL,37 USABLE . /WHITE/	2	7
	58-920034-19	. PLACARD,FUEL TANK CAPACITY 40 GAL,37 USABLE . /BLACK/	2	7
- 22	96-820036	. DECAL,PIN INSTRUCTION	3	3
- 23	130728	. PLACARD,MODEL AND SERIAL/BAGGAGE DOOR SILL/ .	1	3
	111745	. PLACARD,MODEL AND SERIAL. . . . . /ALTERNATE FOR 130728/	1	3
	R 58-100023-5W-C	DECAL,WING ATTACH WASHERS/WHITE ON CLEAR/ . . .	4	3
	58-100023-7B-C	DECAL,WING ATTACH WASHERS/BLACK ON CLEAR/ . . .	4	3

CODES OF EFFECTIVITY

1 TE-768 THRU TE-846
2 TE-847 THRU TE-942 EXCEPT TE-938
3 TE-768 THRU TE-942 EXCEPT TE-938
4 TE-768 THRU TE-831
5 TE-768 THRU TE-851
6 TE-852 THRU TE-893
7 TE-894 THRU TE-942 EXCEPT TE-938

11-30-01
INTERIOR PLACARDS
TC-1 THRU TC-1607,TE-1 THRU TE-767

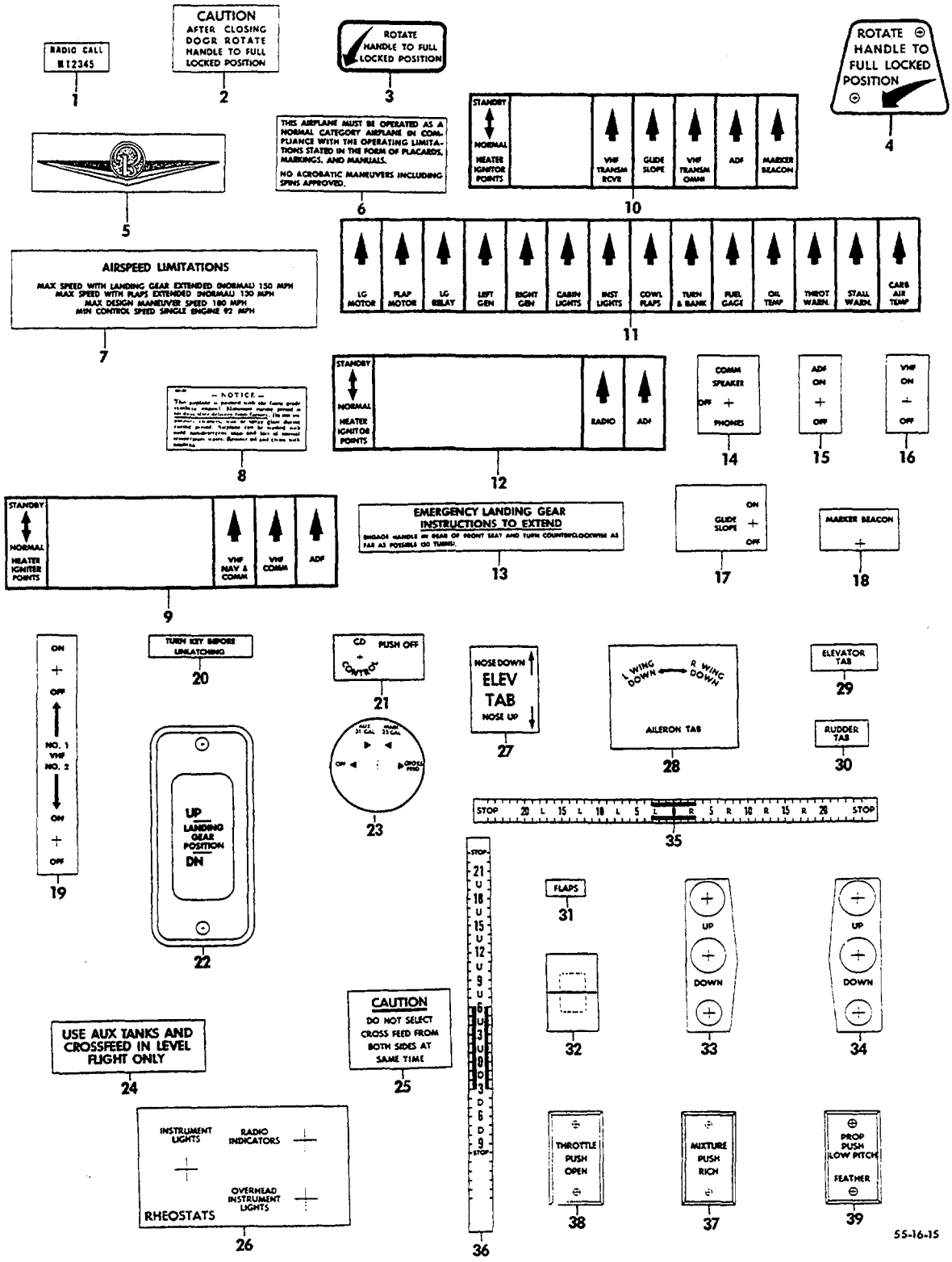

FIGURE 30-01.INTERIOR PLACARDS
/SHEET 1 OF 3 SHEETS/

SUB-SECT UNIT & ITEM NO.	PART NO.	DESCRIPTION 1 2 3 4 5 6 7	UNITS PER ASSY	USABLE ON CODE
30-01 - 1	R 95-324005-33	PLATE,RADIO CALL.	1	1
- 2	50-400335-1	DECAL,CABIN DOOR LOCKING PROCEDURE.	1	2
- 3	35-400472	DECAL,CABIN DOOR LOCKING PROCEDURE.	1	3
- 4	35-400474	PLATE,CABIN DOOR LOCKING PROCEDURE.	1	4
- 5	35-534382	INSIGNIA.	4	1
- 6	95-324030	DECAL,OPERATIONS LIMITATIONS.	1	2
- 7	96-324019	DECAL,OPERATIONS SPEED INSTRUCTIONS	1	2
- 8	35-000061	DECAL,EXTERIOR PAINT PROTECTION	1	1
- 9	95-344032	DECAL,IDENTIFICATION,SUB PANEL DOOR RH.	1	1
- 10	95-324040	DECAL/ALTERNATE FOR 95-344032/.	1	1
- 11	95-324053	DECAL	1	1
- 12	95-344035	DECAL	1	1
- 13	R 33-324030	PLATE,EMERGENCY LANDING GEAR EXTENSION.	1	5
	R 33-324032	PLATE,EMERGENCY LANDING GEAR EXTENSION.	1	6
- 14	95-340010-23	DECAL,SPEAKER-PHONE	1	1
- 15	95-340010-21	DECAL,ADF ON-OFF.	1	1
- 16	95-340010-19	DECAL,VHF ON-OFF.	1	1
- 17	95-340010-17	DECAL,GLIDESLOPE.	1	1
- 18	95-340010-15	DECAL,MARKER BEACON	1	1
- 19	95-340010-11	DECAL,OFF-ON SWITCH	1	1
- 20	95-410036	DECAL	1	1
- 21	414-180106A	DECAL,CD CONTROL.	1	2
- 22	35-815148-9	DECAL,LANDING GEAR VISUAL INDICATOR	1	1
- 23	95-924020-5	DECAL,FUEL SELECTOR LH/22 GAL,. . . . . SUPERSEDES 95-924020-1/	1	7
	95-924021-5	DECAL,FUEL SELECTOR LH/37 GAL,. . . . . SUPERSEDES 95-924021-1/	1	8
	95-924020-3	DECAL,FUEL SELECTOR RH/22 GAL,. . . . . SUPERSEDES 95-924020/	1	7
	95-924021-3	DECAL,FUEL SELECTOR RH/37 GAL,. . . . . SUPERSEDES 95-924021/	1	8
- 24	95-921015	DECAL	1	9
- 25	95-924028	DECAL	1	9
- 26	96-324027	DECAL,LIGHT RHEOSTAT INSTRUCTIONS	1	10
- 27	50-524223-3	DECAL,ELEVATOR TAB WHEEL.	1	10
- 28	96-324042	DECAL,AILERON TAB IDENTIFICATION.	1	10
- 29	96-324043	DECAL,ELEVATOR TAB IDENTIFICATION	1	10
- 30	96-324044	DECAL,RUDDER TAB IDENTIFICATION	1	10
- 31	96-324049	DECAL,FLAP IDENTIFICATION	1	10
- 32	96-324041	DECAL,ELEVATOR & RUDDER TAB INDICATOR	2	10
- 33	96-324048	DECAL,LANDING GEAR.	1	10
- 34	96-324048-1	DECAL,LANDING GEAR.	1	10
- 35	96-524014	DECAL,RUDDER TAB INDICATOR.	1	1
- 36	95-524030	DECAL,ELEVATOR INDICATOR.	1	10
- 37	95-324006-159	DECAL,MIXTURE LEVEL	1	2
- 38	95-324006-161	DECAL,THROTTLE INDICATOR.	1	2
- 39	95-324006-169	DECAL,PROPELLER PUSH.	1	2
	96-324037-1	PLATE,ENGINE CONTROL IDENTIFICATION	1	10

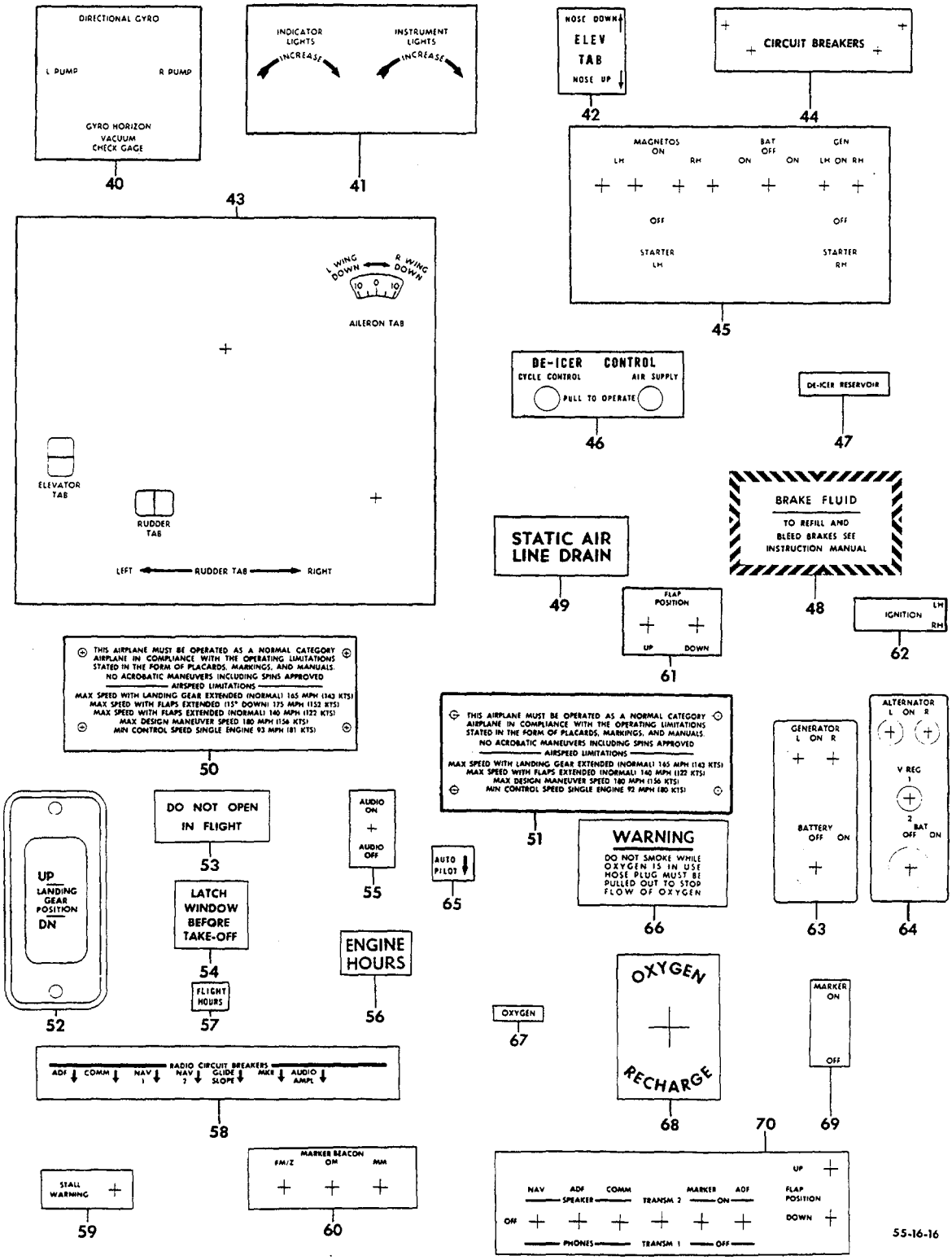

FIGURE 30-01. INTERIOR PLACARDS
/SHEET 2 OF 3 SHEETS/

SUB-SECT UNIT & ITEM NO.		PART NO.	DESCRIPTION 1 2 3 4 5 6 7	UNITS PER ASSY	USABLE ON CODE
30-01 - 40		95-324019	DECAL,VACUUM CHECK GAGE	1	2
- 41		95-324020	DECAL,LIGHT RHEOSTATS	1	2
- 42		50-524223-3	DECAL,ELEVATOR TAB WHEEL.	1	10
- 43	R	95-324031	DECAL,CENTER PANEL SHELL.	1	2
- 44		95-364021	DECAL,CIRCUIT BREAKER	1	2
- 45		95-324062	DECAL,IGNITION PANEL.	1	11
- 46	R	301313	PLATE,DE-ICER/OPTIONAL/	1	1
- 47		95-970012	DECAL,DE-ICER/OPTIONAL/	1	1
- 48		404-180074	DECAL,HYDRAULIC BRAKE RESERVOIR	1	1
- 49		35-410175	DECAL,STATIC AIR LINE DRAIN	1	2
- 50		96-534029	DECAL,OPERATIONS LIMITATIONS.	1	12
		96-534089	DECAL,OPERATIONS LIMITATIONS.	1	13
- 51		95-324065	DECAL,OPERATIONS LIMITATIONS.	1	14
		96-534023	DECAL,OPERATIONS LIMITATIONS.	1	15
		96-420018	DECAL,OPERATIONS LIMITATIONS.	1	16
		96-534090	DECAL,OPERATIONS LIMITATIONS.	1	17
- 52	R	35-815148-9	DECAL,LANDING GEAR INDICATOR.	1	1
- 53		35-410329	DECAL,CABIN WINDOW.	2	1
- 54		35-534352-3	DECAL	2	10
- 55		95-340011-21	DECAL	1	10
- 56		96-324020-3	DECAL,ENGINE HOURS.	1	2
- 57		96-324022-3	PLATE,FLIGHT HOURS.	1	2
- 58		96-340061	DECAL,RADIO CONTROL SWITCH.	1	1
	R	95-324061	DECAL,RADIO CONTROL SWITCH.	1	2
- 59	R	95-324060	DECAL,STALL WARNING LIGHT	1	1
- 60	R	95-324063	DECAL,MARKER BEACON LIGHTS.	1	1
- 61		95-324059	DECAL,FLAP POSITION LIGHTS.	1	2
- 62		95-364030	DECAL,IGNITION SWITCH	2	1
- 63		96-364035	DECAL,BATTERY & GENERATOR SWITCH.	1	18
- 64		96-364035-1	DECAL,BATTERY & ALTERNATOR SWITCH	1	18
		96-364038-1	DECAL,BATTERY & GENERATOR SWITCH.	1	19
		96-364038-3	DECAL,BATTERY & ALTERNATOR SWITCH	1	19
- 65		96-500018-5	PLATE,AUTOPILOT	1	1
- 66		50-534288	DECAL,OXYGEN SMOKE WARNING.	2	1
- 67		50-560012	DECAL,OXYGEN OUTLET	5	1
- 68		50-560015	DECAL,RECHARGE VALVE.	1	1
- 69		35-344211	DECAL,RADIO SWITCH.	1	1
- 70		95-324051	DECAL,AUDIO CONTROLS & FLAP POSITION.	1	1
	R	C63551-3	DECAL,TURNING TYPE TAKEOFF PROHIBITED	1	24

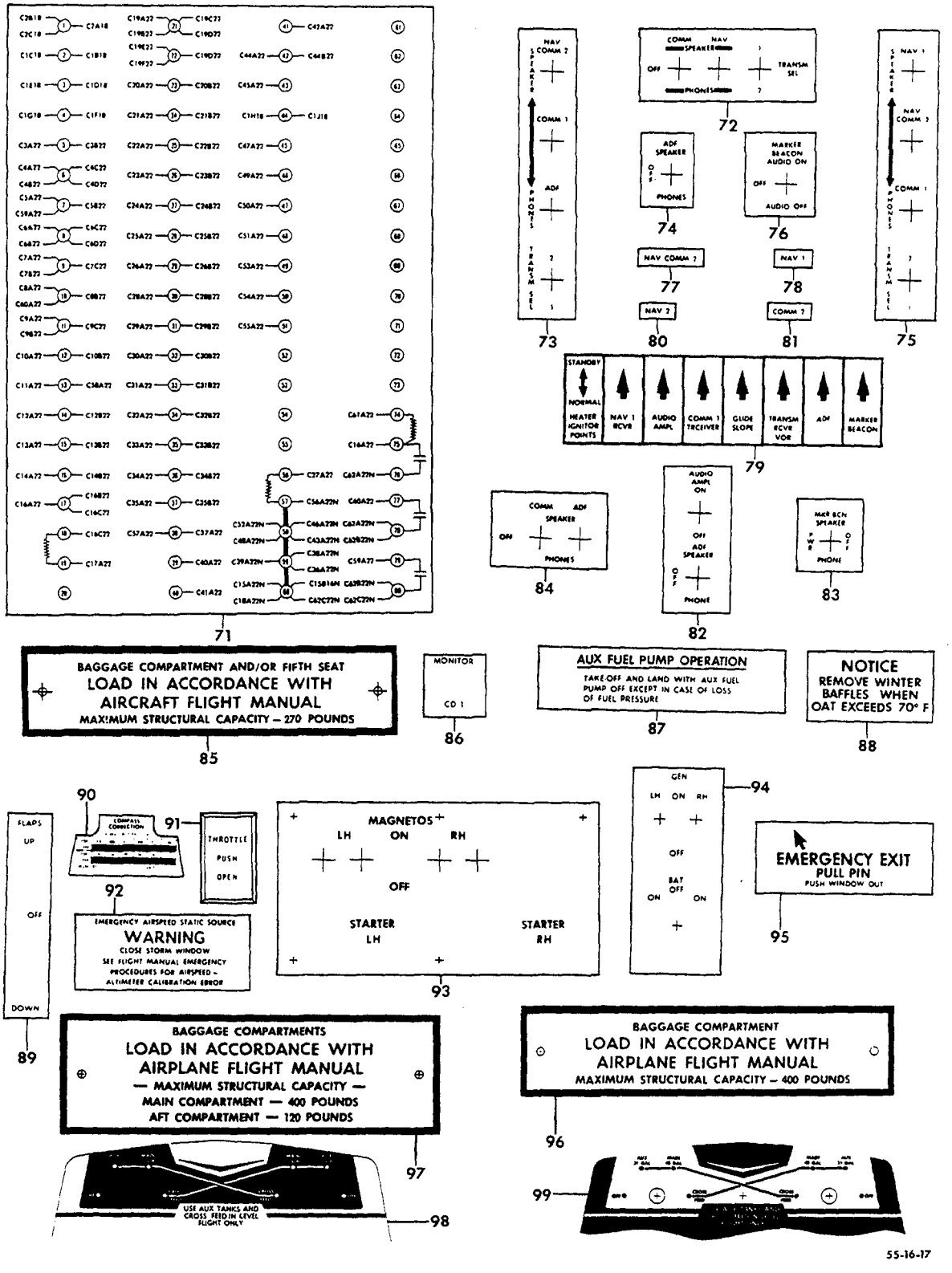

FIGURE 30-01.INTERIOR PLACARDS
/SHEET 3 OF 3 SHEETS/

SUB-SECT UNIT & ITEM NO.	PART NO.	DESCRIPTION 1 2 3 4 5 6 7	UNITS PER ASSY	USABLE ON CODE
30-01 - 71	96-360014	DECAL,JUNCTION BOX LID.	1	1
- 72	95-340013-39	DECAL	1	1
- 73	95-340013-41	DECAL	1	1
- 74	95-340013-55	DECAL,ADF SPEAKER-PHONE	1	1
- 75	95-340013-57	DECAL	1	1
- 76	95-340013-59	DECAL	1	1
- 77	95-340013-65	DECAL,ADF SWITCH.	1	1
- 78	95-340013-67	DECAL,NAV 1	1	1
- 79	95-340013-73	DECAL,CIRCUIT BREAKER	1	1
- 80	95-340013-75	DECAL,NAV II.	1	1
- 81	95-340013-77	DECAL,COMM II	1	1
- 82	95-340013-81	DECAL,AUDIO SWITCH.	1	1
- 83	95-340013-87	DECAL,MARKER BEACON	1	1
- 84	95-344042	DECAL,AUDIO CONTROL	1	1
- 85	95-534026	PLACARD,AFT BAGGAGE &/OR 5TH SEAT,270 LBS/. . .	1	1
	96-534028	PLACARD,AFT BAGGAGE &/OR REAR SEATS,270 LBS/. .	1	1
- 86	50-344478	DECAL,MONITOR SWITCH.	1	1
- 87	35-924259	DECAL,AUXILIARY FUEL PUMP OPERATION	1	1
- 88	96-910018	DECAL,COWL WINTER BAFFLE.	2	1
- 89	95-324046	DECAL,FLAP ACTUATOR	1	1
- 90	35-324360	DECAL,COMPASS CORRECTION.	1	1
- 91	50-320279	DECAL,THROTTLE CONTROL.	1	1
- 92	18-420016	DECAL,EMERGENCY AIR SPEED STATIC AIR SOURCE . .	1	20
	96-324077	PLATE,EMERGENCY STATIC AIR SOURCE INSTRUCTION .	1	21
- 93	95-364026	DECAL,IGNITION PANEL.	1	1
- 94	95-364031	DECAL,IGNITION PANEL.	1	1
- 95	96-534042	DECAL,EMERGENCY EXIT INSTRUCTION.	1	2
		SEE BEECHCRAFT S. I. 1241		
- 96	96-534046	PLACARD,AFT BAGGAGE &/OR REAR SEATS,400 LBS/. .	1	1
- 97	96-534050	PLACARD,AFT BAGGAGE/400 LB & 120 LBS/	1	22
- 98	96-920011-1	PLACARD,FUEL SELECTOR VALVE 142 GAL	1	23
		/SUPERSEDES 96-924011/		
- 99	96-920011-17	PLACARD,FUEL SELECTOR VALVE 142 GAL	1	23
		/SUPERSEDES 96-924011-5/		
	35-534402	DECAL,HAT SHELF	1	1

CODES OF EFFECTIVITY

1	TC-1 THRU TC-1607 TE-1 THRU TE-767	2	TC-1 THRU TC-190
3	TC-191 THRU TC-1402 TE-1 THRU TE-767	4	TC-1403 THRU TC-1607
5	TC-1 THRU TC-1402	6	TC-1403 THRU TC-1607
7	TC-1 THRU TC-420 EXCEPT TC-251	8	TC-251 AND TC-421 THRU TC-1607 TE-1 THRU TE-767
9	TC-1 THRU TC-180	10	TC-191 THRU TC-1607 TE-1 THRU TE-767
11	TC-1 THRU TC-23	12	TE-1 THRU TE-632
13	TE-633 THRU TE-767	14	TC-191 THRU TC-501
15	TC-502 THRU TC-954	16	TC-955 THRU TC-1156
17	TC-1157 THRU TC-1607	18	TC-1 THRU TC-831
19	TC-832 THRU TC-1607 TE-1 THRU TE-767	20	TC-1 THRU TC-897
21	TC-898 THRU TC-1607 TE-1 THRU TE-767	22	TE-1 THRU TE-767
23	TC-502 THRU TC-1607 TE-1 THRU TE-767	24	TC-1 THRU TC-1244 TE-1 THRU TE-717

"END"

11-30-10
INTERIOR PLACARDS
TE-768 THRU TE-942 EXCEPT TE-938

RADIO CALL
N12345

1

BEECH

4

UP
LANDING GEAR POSITION
DN

2

PUSH LOW PITCH
P
PROP
FEATHER

PUSH OPEN
T
THROTTLE

PUSH RICH
M
MIXTURE

3

EMERGENCY LANDING GEAR INSTRUCTIONS TO EXTEND

ENGAGE HANDLE IN REAR OF FRONT SEAT AND TURN COUNTERCLOCKWISE AS FAR AS POSSIBLE (50 TURNS)

5

LANDING GEAR EMERGENCY HAND CRANK

6

BAGGAGE COMPARTMENT
LOAD IN ACCORDANCE WITH WEIGHT AND BALANCE DATA
MAXIMUM STRUCTURAL CAPACITY - 300 POUNDS

9

BAGGAGE COMPARTMENTS
LOAD IN ACCORDANCE WITH WEIGHT AND BALANCE DATA
MAXIMUM STRUCTURAL CAPACITY
MAIN COMPARTMENT - 400 POUNDS
AFT COMPARTMENT - 120 POUNDS

8

THIS AIRPLANE MUST BE OPERATED AS A NORMAL CATEGORY AIRPLANE IN COMPLIANCE WITH THE OPERATING LIMITATIONS STATED IN THE FORM OF PLACARDS, MARKINGS, AND MANUALS.
(PILOT'S CHECK LIST)
OCCUPIED SEATS MUST BE IN UPRIGHT POSITION DURING TAKE-OFF AND LANDING
MAXIMUM WEIGHT 5300 LBS
NO ACROBATIC MANEUVERS INCLUDING SPINS APPROVED

AIRSPEED LIMITATIONS

MAX. SPEED WITH LDG GEAR EXTENDED (NORMAL) 175 MPH (152 KTS)
MAX. SPEED WITH FLAPS EXTENDED (15° DOWN) 175 MPH (152 KTS)
MAX. SPEED WITH FLAPS EXTENDED (NORMAL) 140 MPH (122 KTS)
MAX. DESIGN MANEUVER SPEED 180 MPH (156 KTS)
MIN CONTROL SPEED SINGLE ENGINE 93 MPH (81 KTS)
NEVER EXCEED SPEED 257 MPH (223 KTS)
MAX. STRUCTURAL CRUISE SPEED 225 MPH (195 KTS)

7

55-16-18

FIGURE 30-10. INTERIOR PLACARDS
/SHEET 1 OF 5 SHEETS/

ATA CODE & INDEX NO.	PART NO.	DESCRIPTION 1 2 3 4 5 6 7	UNITS PER ASSY	USABLE ON CODE
30-10 - 1	95-324005-33	PLATE,RADIO CALL.	1	1
- 2	35-815149-9	PLACARD,LANDING GEAR POSITION	1	1
- 3	96-324037-1	PLATE,ENGINE CONSOLE.	1	1
- 4	96-534103	EMBLEM,BEECH.	2	1
- 5	33-324032	PLATE,EMERGENCY LANDING GEAR INSTRUCTION. . . .	1	1
- 6	35-534098	PLACARD,LANDING GEAR EMERGENCY HAND CRANK . . .	1	1
- 7	96-534117	PLATE,OPERATIONS & LIMITATIONS INSTRUCTIONS . .	1	1
- 8	96-534067	PLATE,BAGGAGE COMPARTMENT LOADING INSTRUCTIONS.	1	1
- 9	96-534068	PLATE,NOSE BAGGAGE COMPARTMENT LOAD INSTRUCTION	1	1

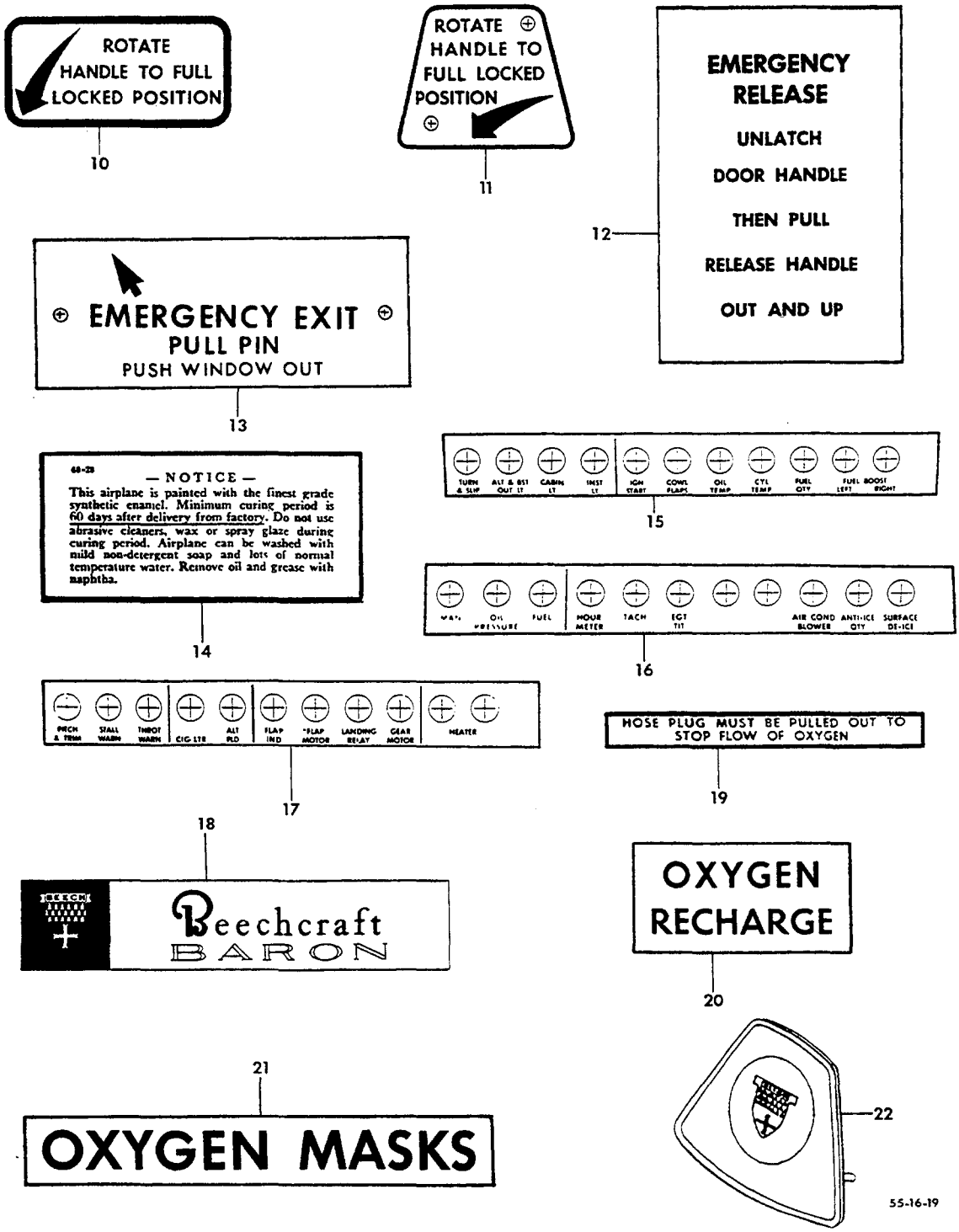

FIGURE 30-10.INTERIOR PLACARDS
/SHEET 2 OF 5 SHEETS/

ATA CODE & INDEX NO.	PART NO.	DESCRIPTION 1 2 3 4 5 6 7	UNITS PER ASSY	USABLE ON CODE
30-10 - 10	35-400472	PLACARD,CABIN DOOR LOCKING PROCEDURE.	1	2
- 11	35-400474	PLACARD,CABIN DOOR LOCKING PROCEDURE.	1	3
- 12	35-410355	PLACARD,QUICK RELEASE DOOR.	1	1
- 13	96-534042-3	PLATE,EMERGENCY EXIT INSTRUCTIONS	1	1
- 14	35-000061	PLACARD,EXTERIOR PAINT PROTECTION INSTRUCTION .	1	1
- 15	96-364084-3	PLATE,CIRCUIT BREAKER PANEL IDENTIFICATION. . .	1	1
- 16	96-364084-5	PLATE,CIRCUIT BREAKER PANEL IDENTIFICATION. . .	1	1
- 17	96-364084-9	PLATE,CIRCUIT BREAKER PANEL IDENTIFICATION. . .	1	1
	35-534441-5	EMBLEM ASSY	1	1
		/ATTACHING PARTS/		
	SC125007	SCREW	2	
		——*——		
- 18	35-534440-5	. EMBLEM,BARON.	1	1
	35-534439	. PLATE,BACKING	1	1
- 19	58-560000-71	DECAL,OXYGEN OUTLET INSTRUCTION	1	1
- 20	96-560012	PLACARD,OXYGEN RECHARGE VALVE	1	1
- 21	58-560013	PLACARD,OXYGEN MASK BOX IDENTIFICATION.	1	1
- 22	50-534846-11	EMBLEM,CONTROL WHEEL.	1	1

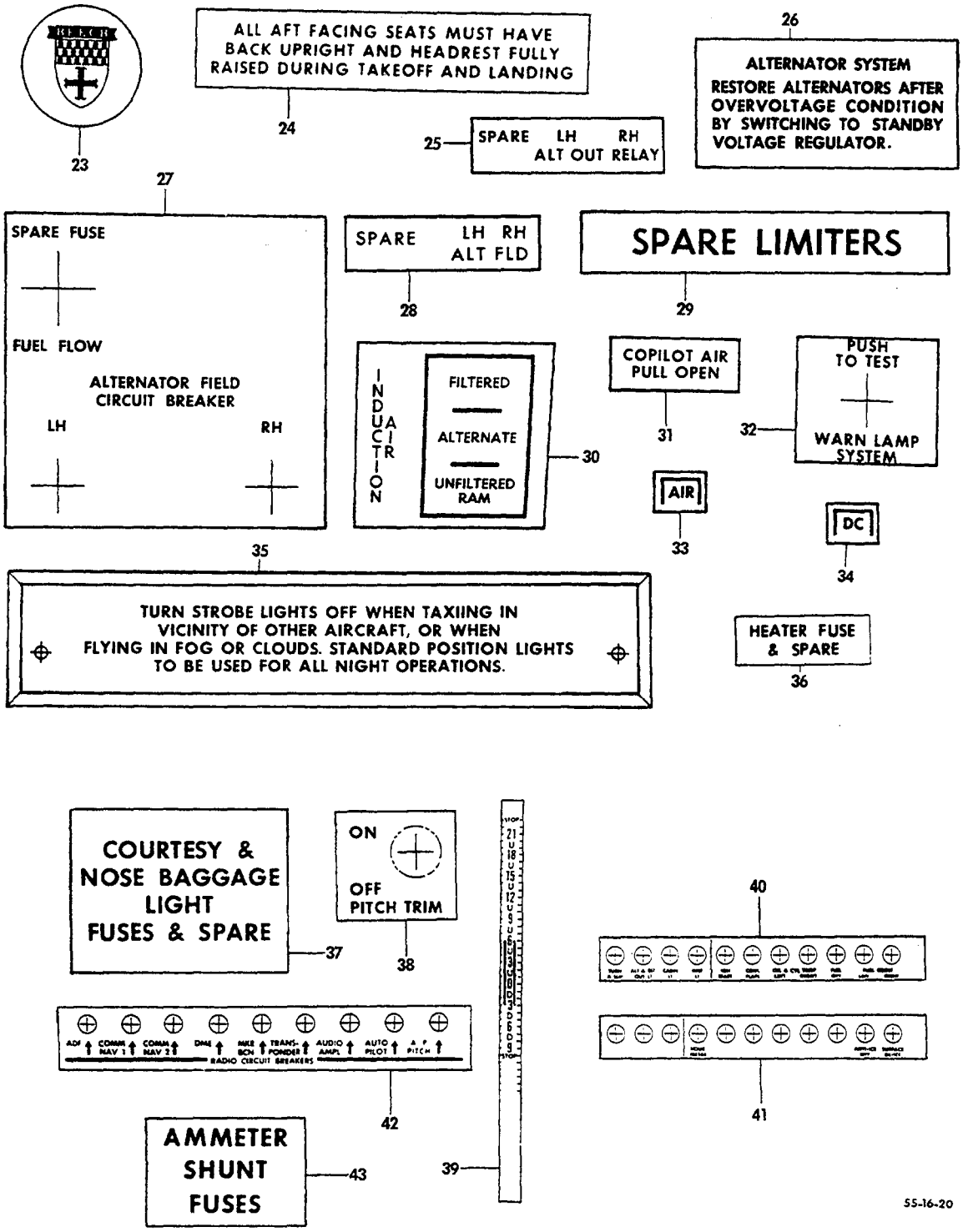

FIGURE 30-10.INTERIOR PLACARDS
/SHEET 3 OF 5 SHEETS/

ATA CODE & INDEX NO.	PART NO.	DESCRIPTION 1 2 3 4 5 6 7	UNITS PER ASSY	USABLE ON CODE
30-10 - 23	50-534733	EMBLEM,SEAT BUCKLE.	1	1
- 24	100-530164	DECAL,AFT FACING SEATS HEADREST	1	1
- 25	96-364059	PLATE,ALTERNATOR OUT RELAY FUSE	1	1
- 26	96-364016	PLACARD,ALTERNATOR SYSTEM INSTRUCTIONS.	1	1
- 27	96-364049	PLACARD,ALTERNATOR IDENTIFICATION	1	1
- 28	96-364037-5	PLATE,ALTERNATOR FIELD CIRCUIT BREAKER.	1	1
- 29	50-364276-1	DECAL,SPARE LIMITER	1	1
- 30	96-324063	PLACARD,INDUCTION AIR CONTROL	1	1
- 31	96-554024	PLACARD,COPILOT AIR	1	1
- 32	35-324470	PLACARD,WARNING LAMP SYSTEM	2	1
- 33	60-324075-1	PLACARD,GYRO POWER INDICATION/AIR/.	1	1
- 34	60-324075-5	PLACARD,GYRO POWER INDICATION/DC/	1	1
- 35	96-364087	PLATE,STROBE LIGHT INSTRUCTIONS	1	1
- 36	96-364064	DECAL,HEATER FUSE	1	1
- 37	96-364071	DECAL,COURTESY & NOSE BAGGAGE LIGHT FUSE. . . .	1	1
- 38	58-524027	PLACARD,ELECTRIC PITCH TRIM	1	1
- 39	96-524035	DECAL,ELEVATOR TRIM TAB INDICATOR	1	1
- 40	58-364030-3	PLATE,CIRCUIT BREAKER PANEL	1	1
- 41	58-364030-5	PLATE,CIRCUIT BREAKER PANEL	1	1
- 42	58-364026	PLACARD,RADIO CIRCUIT BREAKER	1	1
- 43	58-364029	DECAL,AMMETER SHUNT FUSES	1	1

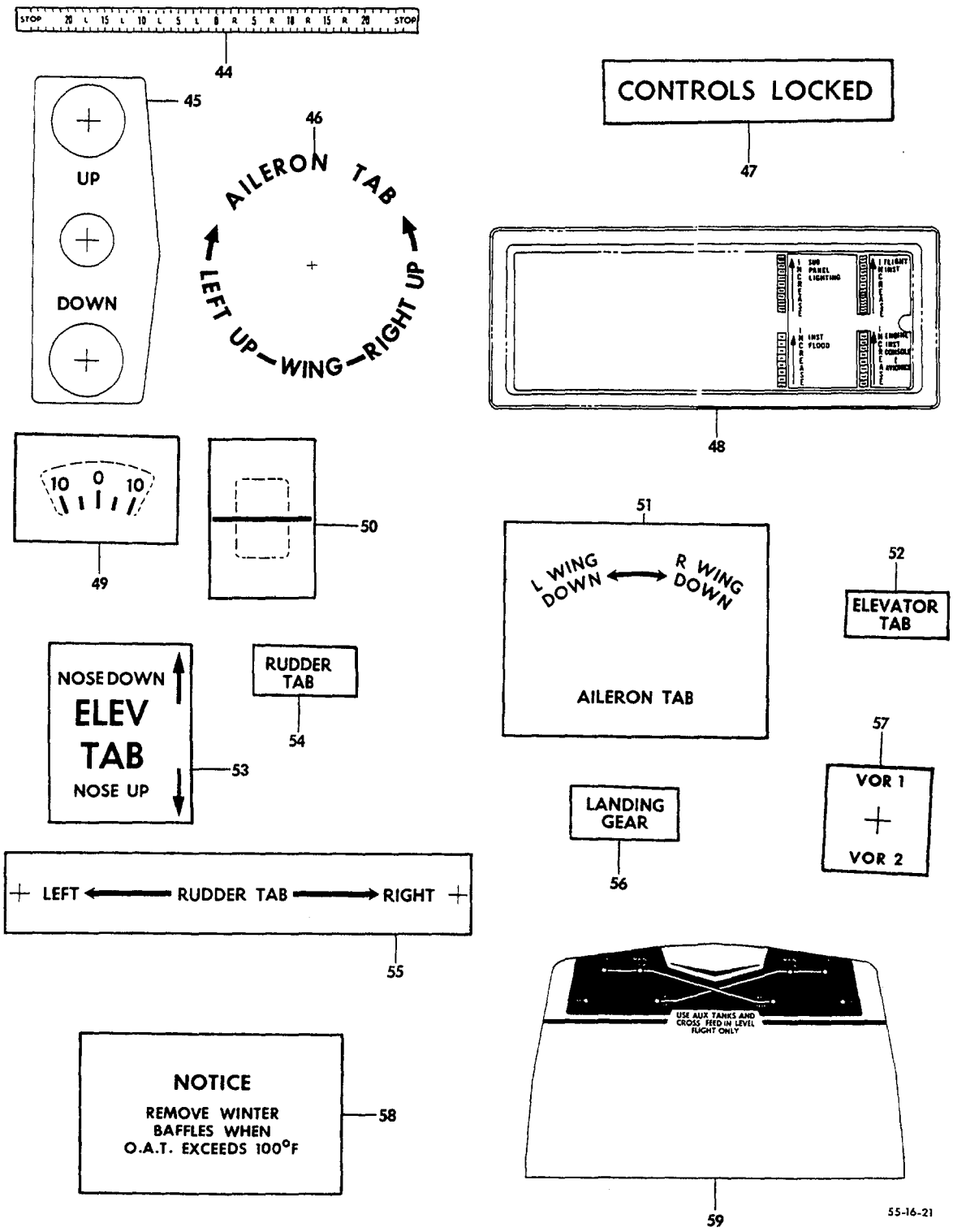

FIGURE 30-10.INTERIOR PLACARDS
/SHEET 4 OF 5 SHEETS/

SUB-SECT UNIT & ITEM NO.	PART NO.	DESCRIPTION 1 2 3 4 5 6 7	UNITS PER ASSY	USABLE ON CODE
30-10 - 44	96-524014	DECAL,RUDDER TRIM TAB INDICATOR	1	1
- 45	96-324103	PLATE,LANDING GEAR POSITION INDICATOR	1	1
- 46	50-524128-1	PLACARD,AILERON TAB KNOB.	1	1
- 47	50-524258	PLACARD,SURFACE CONTROL LOCK.	1	1
- 48	R 58-530148-1	PLACARD,LIGHT DIMMING/3.00 IN X 8.41 IN/. . . .	1	1
	R 58-530148-5	PLACARD,LIGHT DIMMING/3.00 IN X 3.73 IN/. . . .	1	1
- 49	93-324040	PLACARD,AILERON TAB WINDOW.	1	1
- 50	96-324041	PLACARD,TRIM TAB WINDOW	2	1
- 51	96-324042	PLACARD,AILERON TAB	1	1
- 52	96-324043	PLACARD,ELEVATOR TAB.	1	1
- 53	50-524223-3	DECAL,ELEVATOR TAB WHEEL.	1	1
- 54	96-324044	PLACARD,RUDDER TAB.	1	1
- 55	96-324045	PLACARD,RUDDER TAB INSTRUCTION.	1	1
- 56	96-324050	PLACARD,LANDING GEAR.	1	1
- 57	58-500017-1	PLACARD,AUTOPILOT SWITCH.	1	1
- 58	96-910038-1	PLACARD,WINTER BAFFLE INSTRUCTIONS.	1	1
- 59	96-924011	PLACARD,FUEL SELECTOR PANEL/112 GAL/.	1	1

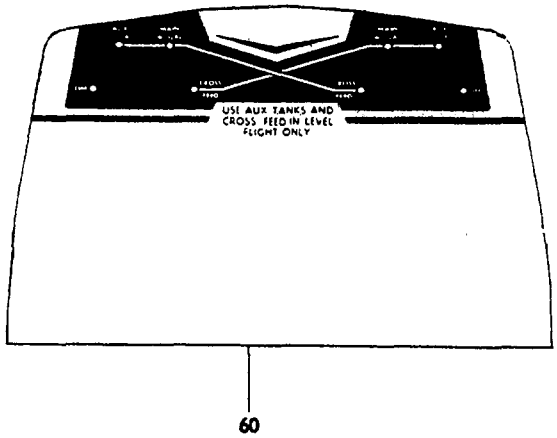

CAUTION

DO NOT OPEN ABOVE 145 MPH (126 KNOTS)

61

BEECH AIRCRAFT CORP.-WICHITA, KANSAS
PART NUMBER
FWD FACING ONLY — DATE
FWD OR AFT FACING

64

DO NOT OPEN IN FLIGHT

62

LATCH WINDOW BEFORE TAKE-OFF

63

65

MANUFACTURED BY
BEECH AIRCRAFT CORPORATION
WICHITA, KANSAS
SERIAL — MODEL
DATE MFD
ENGINE
T.C. — P.C.

Beechcraft

66

67

Beech Aircraft Corporation
Wichita, Kansas, U. S. A.
DATE MFD
PART NO.
APPROVED FOR — PERSON
RATED STRENGTH
FAA - TSO - C22

55-16-22

FIGURE 30-10. INTERIOR PLACARDS
/SHEET 5 OF 5 SHEETS/

SUB-SECT UNIT & ITEM NO.	PART NO.	DESCRIPTION 1 2 3 4 5 6 7	UNITS PER ASSY	USABLE ON CODE
30-10 - 60	96-924011-5	PLACARD,FUEL SELECTOR PANEL/142 GAL/.	1	1
- 61	35-410326	PLACARD,STORM WINDOW INSTRUCTION.	1	1
- 62	35-410329	PLACARD,CABIN WINDOW.	2	1
- 63	35-534352-3	PLACARD,WINDOW LATCH.	2	1
- 64	130569	PLACARD,CHAIR IDENTIFICATION.	1	1
- 65	130728	PLACARD,MODEL IDENTIFICATION. . . . . /ALTERNATE FOR 111745/	1	1
	111745	PLACARD,MODEL IDENTIFICATION. . . . . /ALTERNATE FOR 130728/	1	1
- 66	R 111530	PLACARD,BEECH INSIGNIA.	1	1
- 67	115184	PLATE,AIRCRAFT IDENTIFICATION	1	1

CODES OF EFFECTIVITY

1 TE-768 THRU TE-942 EXCEPT TE-938
2 TE-768 THRU TE-846
3 TE-847 THRU TE-942 EXCEPT TE-938

CHAPTER

21

AIR CONDITIONING

LIST OF PAGES & TABLE OF CONTENTS FOR CHAPTER 21-00-00 ENVIRONMENTAL SYSTEMS

CHAP/SUB-SECT & UNIT	PAGE NO.	EFFECTIVE DATE	TABLE OF CONTENTS
21-00-00	1	04/05/85	LIST OF PAGES & TABLE OF CONTENTS
21-00-00	2	04/05/85	
21-20-01	1	03/10/78	HEAT AND VENT DUCTS
21-20-01	2	03/10/78	TC-1 THRU TC-954
21-20-01	3	04/05/85	
21-20-01	4	03/10/78	
21-20-01	5	04/05/85	
21-20-10	1	04/05/85	HEAT AND VENT DUCTS
21-20-10	2	03/10/78	TC-955 THRU TC-1607 AND TE-1 THRU TE-942
21-20-10	3	03/10/78	EXCEPT TE-938
21-20-10	4	03/10/78	
21-20-10	5	04/30/84	
21-22-01	1	03/10/78	OVERHEAD PANEL AND DUCTS
21-22-01	2	03/10/78	TC-1 THRU TC-954 EXCEPT TC-350
21-22-01	3	03/10/78	
21-22-01	4	03/10/78	
21-22-01	5	03/10/78	
21-22-01	6	03/10/78	
21-22-01	7	03/10/78	
21-22-10	1	03/10/78	OVERHEAD PANEL AND DUCTS
21-22-10	2	03/10/78	TC-350 AND TC-955 THRU TC-963
21-22-10	3	03/10/78	TE-1 THRU TE-10
21-22-10	4	03/10/78	
21-22-10	5	03/10/78	
21-22-10	6	03/10/78	
21-22-10	7	03/10/78	
21-22-20	1	03/10/78	OVERHEAD PANEL AND DUCTS
21-22-20	2	03/10/78	TC-964 THRU TC-1402
21-22-20	3	03/10/78	TE-11 THRU TE-767
21-22-20	4	03/10/78	
21-22-20	5	03/10/78	
21-22-20	6	03/10/78	
21-22-20	7	03/10/78	
21-22-20	8	03/10/78	
21-22-20	9	03/10/78	
21-22-30	1	03/10/78	OVERHEAD PANEL AND DUCTS
21-22-30	2	03/10/78	TE-768 THRU TE-846
21-22-30	3	03/10/78	
21-22-30	4	03/10/78	
21-22-30	5	03/10/78	
21-22-40	1	03/10/78	OVERHEAD PANEL AND DUCTS
21-22-40	2	03/10/78	TC-1403 THRU TC-1607
21-22-40	3	03/10/78	TE-847 THRU TE-942 EXCEPT TE-938
21-22-40	4	03/10/78	
21-22-40	5	03/10/78	
21-22-50	1	03/10/78	DUCT INSTL,OVERHEAD AIR
21-22-50	2	03/10/78	TC-1093 THRU TC-1607
21-22-50	3	03/10/78	TE-560 THRU TE-942 EXCEPT TE-938
21-40-01	1	03/10/78	CABIN HEATER
21-40-01	2	03/10/78	
21-40-01	3	03/10/78	
21-40-01	4	03/10/78	
21-40-01	5	03/10/78	
21-40-01	6	03/10/78	
21-40-01	7	03/10/78	
21-40-01	8	03/10/78	

LIST OF PAGES & TABLE OF CONTENTS
FOR
CHAPTER 21-00-00 ENVIRONMENTAL SYSTEMS

CHAP/SUB-SECT & UNIT	PAGE NO.	EFFECTIVE DATE	TABLE OF CONTENTS
21-40-01	9	03/10/78	
21-40-20	1	03/10/78	HEATER FUEL PLUMBING
21-40-20	2	03/10/78	
21-40-20	3	03/10/78	
21-40-20	4	03/10/78	
21-40-20	5	04/30/84	
21-40-40	1	03/10/78	HEATER FUEL PUMP
21-40-40	2	03/10/78	
21-40-40	3	03/10/78	
21-40-60	1	03/10/78	HEATER BLOWER
21-40-60	2	03/10/78	
21-40-60	3	03/10/78	
21-40-60	4	03/10/78	
21-40-60	5	03/10/78	

21-20-01
HEAT AND VENT DUCTS
TC-1 THRU TC-954

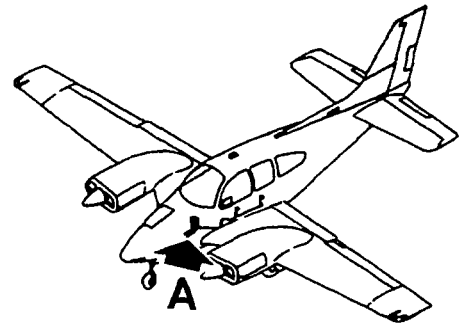

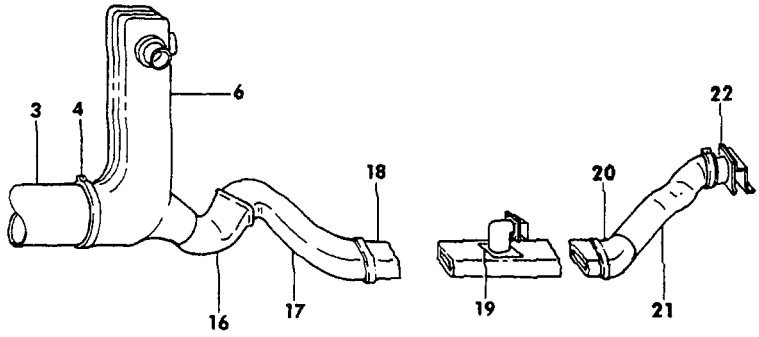

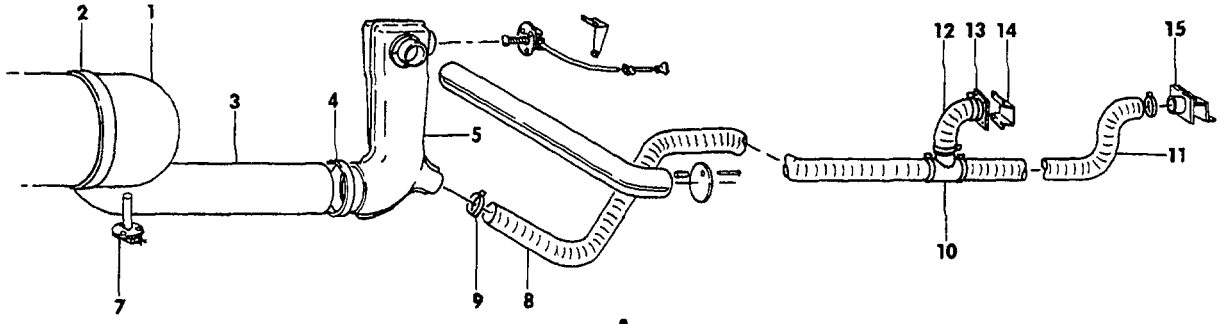

VIEW A

B55-417-19

FIGURE 20-01.HEAT AND VENT DUCTS
/SHEET 1 OF 2 SHEETS/

SUB-SECT UNIT & ITEM NO.	PART NO.	DESCRIPTION 1 2 3 4 5 6 7	UNITS PER ASSY	USABLE ON CODE
20-01	95-550000	HEAT AND VENT INSTL,CABIN	NP	1
	95-550001-1	HEAT AND VENT INSTL,CABIN	NP	2
	95-550001-19	HEAT AND VENT INSTL,CABIN	NP	3
	95-550001-23	HEAT AND VENT INSTL,CABIN	NP	4
	95-550002-1	HEAT AND VENT INSTL,CABIN	NP	5
	95-554011	. PLENUM,HEATER	1	1
- 1	95-554038-9	. PLENUM,HEATER	1	6
		/ATTACHING PARTS/		
- 2	40A50	. CLAMP	1	7
		----*----		
	95-554012-1	. DUCT,CABIN HEATER AIR	1	1
- 3	95-554037	. DUCT,CABIN HEATER AIR	1	6
		/ATTACHING PARTS/		
- 4	105798-13	. CLAMP	1	
		----*----		
	95-554019-1	. PLENUM.	1	1
- 5	95-554039	. PLENUM.	1	8
- 6	95-554039-3	. PLENUM.	1	9
- 7	112447S1C-C300T	. THERMOSTAT.	1	7
- 8	111716AX4XX99	. DUCT,CABIN AIR.	1	10
		/ATTACHING PARTS/		
- 9	105798-7	. CLAMP	2	
		----*----		
- 10	95-550000-55	. TUBE ASSY,CABIN AIR	1	10
- 11	111716AX4XX70	. DUCT,CABIN AIR.	1	10
		/ATTACHING PARTS/		
	105798-7	. CLAMP	2	
		----*----		
- 12	111716AX4XX11	. DUCT.	1	6
		/ATTACHING PARTS/		
	105798-7	. CLAMP	2	
		----*----		
- 13	R 95-550000-9	. OUTLET ASSY	1	7
- 14	35-550042	. DEFLECTOR,AIR	1	7
		/ATTACHING PARTS/		
	AN515-8R	. SCREW	4	
	AN960-8	. WASHER.	4	
		----*----		
- 15	95-550000-49	. DEFLECTOR,AIR	1	10
		/ATTACHING PARTS/		
	AN515-8R	. SCREW	4	
	AN960-8	. WASHER.	4	
		----*----		
- 16	95-550001-27	. DUCT,CABIN AIR.	1	9
- 17	95-550001-37	. DUCT,CABIN AIR.	1	9
- 18	95-550001-29	. DUCT,CABIN AIR.	1	9
- 19	95-550001-33	. OUTLET,AIR.	1	9
- 20	95-550001-31	. ADAPTER	1	9
- 21	111716AX5XX44	. DUCT.	1	9
		/ATTACHING PARTS/		
	105798-9	. CLAMP	1	
		----*----		
- 22	95-550001-35	. DEFLECTOR,AIR	1	9
		/ATTACHING PARTS/		
	AN515-8R	. SCREW	4	
	AN960-8	. WASHER.	4	
		----*----		

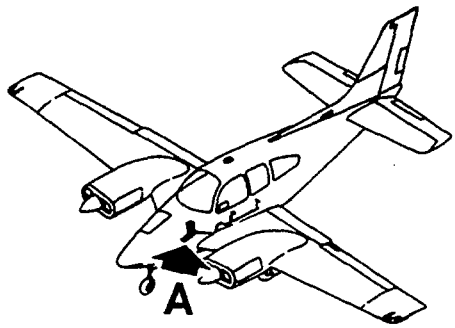

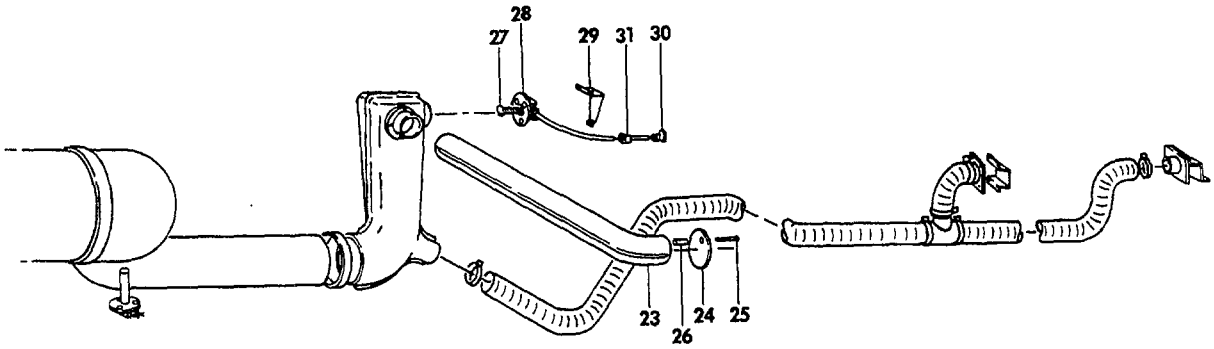

VIEW A

B55-417-20

FIGURE 20-01.HEAT AND VENT DUCTS
/SHEET 2 OF 2 SHEETS/

SUB-SECT UNIT & ITEM NO.	PART NO.	DESCRIPTION 1 2 3 4 5 6 7	UNITS PER ASSY	USABLE ON CODE
20-01	111716AX-XX4-32	. DUCT,CABIN AIR/LH/.	1	1
		/ATTACHING PARTS/		
	105798-7	. CLAMP	1	
		----*----		
	95-550000-31	. WELD ASSY,CABIN AIR OUTLET/LH/.	1	1
- 23	95-554040	. DUCT ASSY,CABIN AIR/LH/	1	6
- 24	95-554016	. PLATE ASSY,AIR DIFFUSER	1	6
		/ATTACHING PARTS/		
- 25	AN515-8R	. SCREW	3	
	AN960-8	. WASHER.	3	
	102933D3ZM0750	. SPACER.	3	11
- 26	102933D3Z00187	. SPACER.	3	12
	MS20365-832	. NUT	3	
		----*----		
- 27	G714127	. THERMOSTAT.	1	7
		/ATTACHING PARTS/		
	AN520-10R	. SCREW	2	
	AN960-10	. WASHER.	2	
		----*----		
	95-550001-7	. PLATE ASSY.	1	13
- 28	95-550001-601	. PLATE ASSY.	1	14
		/ATTACHING PARTS/		
	AN507-8R8	. SCREW	3	
		----*----		
- 29	95-550001-17	. BRACKET	1	6
		/ATTACHING PARTS/		
	AN507-8R	. SCREW	3	
		----*----		
	95-940011-1	. CONTROL ASSY,HEATER THERMOSTAT PUSH PULL. . .	1	15
- 30	95-940011-3	. CONTROL ASSY,HEATER THERMOSTAT PUSH PULL. . .	1	16
- 31	95-550000-37	. BRACKET,CONTROL MOUNT	1	7
	AN742D6	. CLAMP,CONTROL SUPPORT	1	7
		/ATTACHING PARTS/		
	AN520-10R	. SCREW	1	
	AN960-10	. WASHER.	1	
	AN366F1032	. NUT PLATE	1	
		----*----		

CODES OF EFFECTIVITY

1	TC-1 AND TC-2	2	TC-3 THRU TC-190
3	TC-191 THRU TC-260 EXCEPT TC-201	4	TC-201,TC-261 THRU TC-501 EXCEPT TC-350
5	TC-350,TC-502 THRU TC-954	6	TC-3 THRU TC-954
7	TC-1 THRU TC-954	8	TC-3 THRU TC-260 EXCEPT TC-201
9	TC-201, TC-261 THRU TC-954	10	TC-1 THRU TC-200 TC-202 THRU TC-260
11	TC-3 THRU TC-180	12	TC-181 THRU TC-954
13	TC-1 THRU TC-59	14	TC-60 THRU TC-954
15	TC-1 THRU TC-190	16	TC-191 THRU TC-954

"END"

21-20-10
HEAT AND VENT DUCTS
TC-955 THRU TC-1607 AND TE-1 THRU TE-942
EXCEPT TE-938

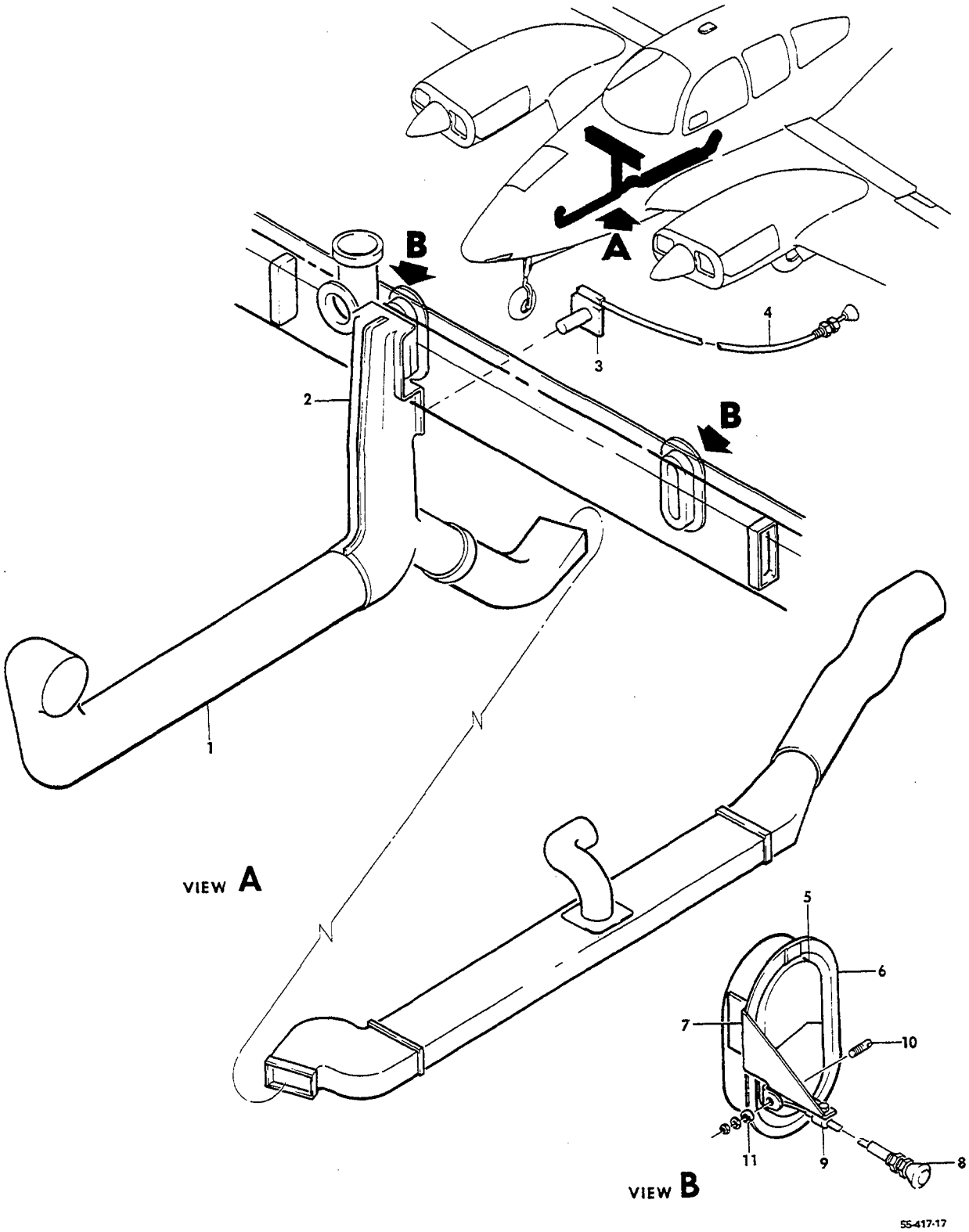

FIGURE 20-10.HEAT AND VENT DUCTS
/SHEET 1 OF 2 SHEETS/

ATA CODE & INDEX NO.	PART NO.	DESCRIPTION 1 2 3 4 5 6 7	UNITS PER ASSY	USABLE ON CODE
20-10	95-550002-195	HEAT AND VENT INSTL,CABIN	NP	1
	95-550002-221	HEAT AND VENT INSTL,CABIN	NP	2
	95-550002-199	HEAT AND VENT INSTL,CABIN	NP	3
	95-550002-219	HEAT AND VENT INSTL,CABIN	NP	4
	95-554038	. PLENUM ASSY,HEATER.	1	5
		/ATTACHING PARTS/		
	40A50	. CLAMP	1	
	21058-1	. CLAMP/ALTERNATE FOR 40A50 CLAMP/.	1	
		——*——		
	112447S1C-C300T	. THERMOSTAT.	1	5
		/ATTACHING PARTS/		
	AN515-8R8	. SCREW	3	
	AN960-8	. WASHER.	1	
		——*——		
- 1	95-554037	. DUCT.	1	6
	95-554037-1	. DUCT.	1	7
- 2	95-550016	. PLENUM.	1	5
- 3	G714127	. THERMOSTAT.	1	5
		/ATTACHING PARTS/		
	AN520-10R	. SCREW	2	
	AN960-10	. WASHER.	2	
	AN366F1032	. NUTPLATE.	2	
		——*——		
- 4	95-940011-3	. CONTROL CABLE,THERMOSTAT.	1	8
	35-380049-23	. CONTROL CABLE,THERMOSTAT.	1	9
	35-380051-29	. CONTROL CABLE,THERMOSTAT.	1	10
		/ATTACHING PARTS/		
	MS21919DG8	. CLAMP	1	
	AN530-6R	. SCREW	1	
	A6052-6Z1	. NUT	1	
	MS21919-4	. CLAMP	2	
	AN520-10R	. SCREW	2	
	AN960-10	. WASHER.	2	
	MS20365-1032	. NUT	2	
		——*——		
- 5	35-550097-1	. DOOR,LH HEAT VENT	1	5
	35-550097-2	. DOOR,RH HEAT VENT	1	5
- 6	35-550024-6	. FRAME,LH HEAT VENT DOOR	1	5
	35-550024-7	. FRAME,RH HEAT VENT DOOR	1	5
- 7	35-550096-3	. BRACKET,LH VENT DOOR CONTROL.	1	5
	35-550096-4	. BRACKET,RH VENT DOOR CONTROL.	1	5
- 8	35-380049-15	. CONTROL,LH VENT DOOR.	1	5
	35-380049-11	. CONTROL,RH VENT DOOR.	1	5
		/ATTACHING PARTS/		
- 9	MS21919DG2	. CLAMP	1	
	AN515-8R	. SCREW	1	
	AN960-8	. WASHER.	1	
	MS20365-832	. NUT	1	
- 10	35-550520	. PIN	1	
- 11	102933S4Z60080	. SPACER.	1	
	AN960-10	. WASHER.	1	
	MS20365-1032	. NUT	1	
		——*——		
	95-550002-49	. BRACKET,RH HEAT VENT CONTROL/AT INST PANEL/ .	1	1

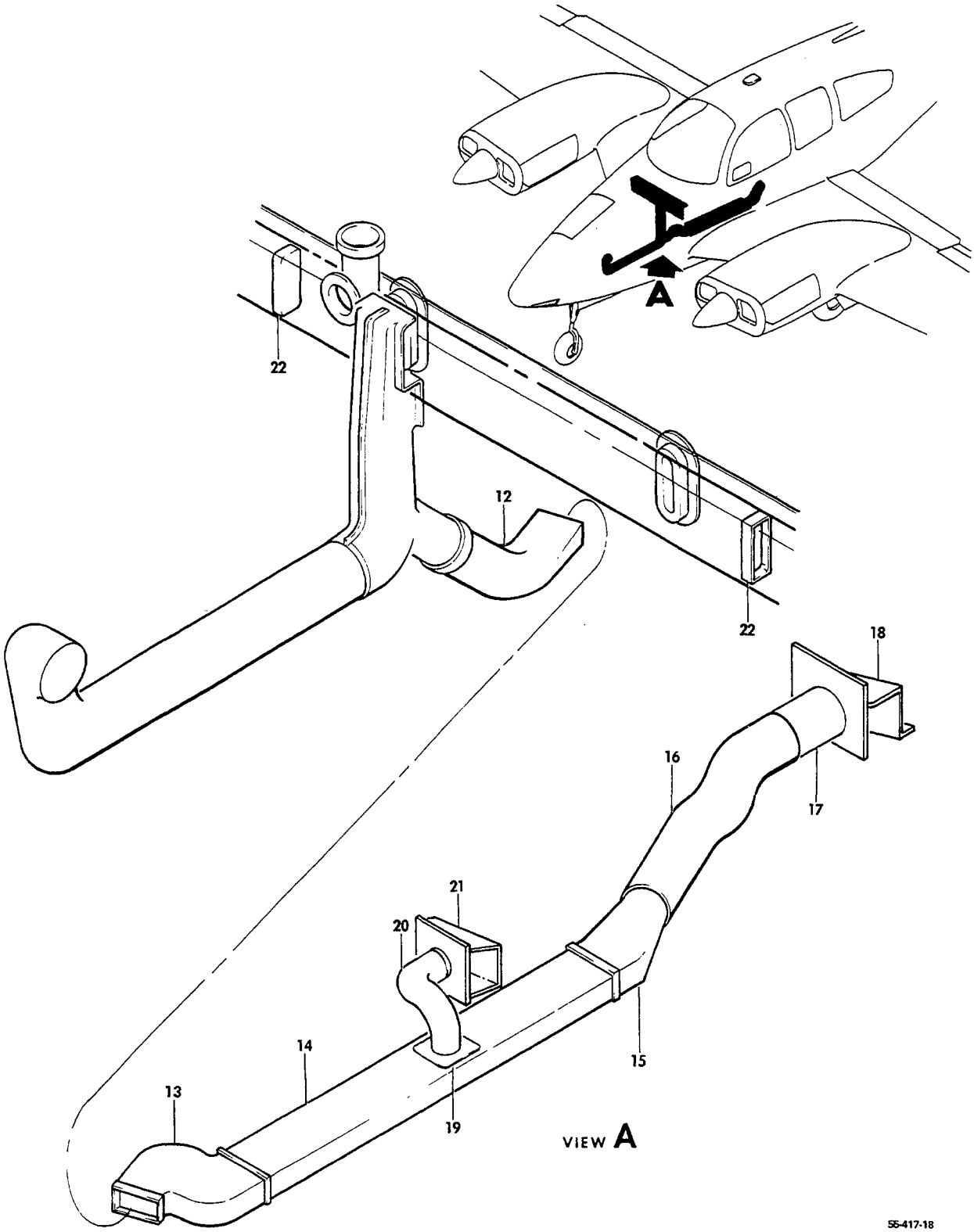

FIGURE 20-10.HEAT AND VENT DUCTS
/SHEET 2 OF 2 SHEETS/

SUB-SECT UNIT & ITEM NO.		PART NO.	DESCRIPTION 1 2 3 4 5 6 7	UNITS PER ASSY	USABLE ON CODE
20-10 - 12	R	95-550001-27	. DUCT.	1	11
	R	95-550002-217	. DUCT.	1	12
- 13	R	95-550001-37	. DUCT.	1	11
	R	95-550002-213	. DUCT.	1	12
- 14	R	95-550001-29	. DUCT.	1	11
	R	35-550567-29	. DUCT.	1	12
- 15		95-550001-31	. DUCT.	1	5
- 16		111716AX5XX34	. DUCT,FLEX	1	5
			/ATTACHING PARTS/		
		105798-9	. CLAMP	2	
			----*----		
- 17		95-420016-45	. WELD ASSY	1	5
- 18		95-550001-35	. DEFLECTOR	1	5
			/ATTACHING PARTS/		
		AN530-6	. SCREW	6	
			----*----		
- 19		95-550001-33	. OUTLET.	1	5
- 20		111716AX4XX15	. DUCT,FLEX	1	5
		105798-7	. CLAMP	2	
- 21		35-550042	. DEFLECTOR	1	5
			/ATTACHING PARTS/		
		AN815-8R	. SCREW	4	
			----*----		
- 22		95-550002-47	. PLUG.	2	5

NOTE SEE CHAPTER 30 FOR
WINDSHIELD DEFROST DUCTS

CODES OF EFFECTIVITY

1	TC-955 THRU TC-1042	2	TC-1043 THRU TC-1607
3	TE-1 THRU TE-451	4	TE-452 THRU TE-942 EXCEPT TE-938
5	TC-955 THRU TC-1607 TE-1 THRU TE-942 EXCEPT TE-938	6	TC-955 THRU TC-1607
7	TE-1 THRU TE-942 EXCEPT TE-938	8	TC-955 THRU TC-1607 TE-1 THRU TE-767
9	TE-768 THRU TE-859	10	TE-860 THRU TE-942 EXCEPT TE-938
11	TC-955 THRU TC-1057 TE-1 THRU TE-564	12	TC-1058 THRU TC-1607 TE-565 THRU TE-942 EXCEPT TE-938

"END"

21-22-01
OVERHEAD PANEL AND DUCTS
TC-1 THRU TC-954 EXCEPT TC-350

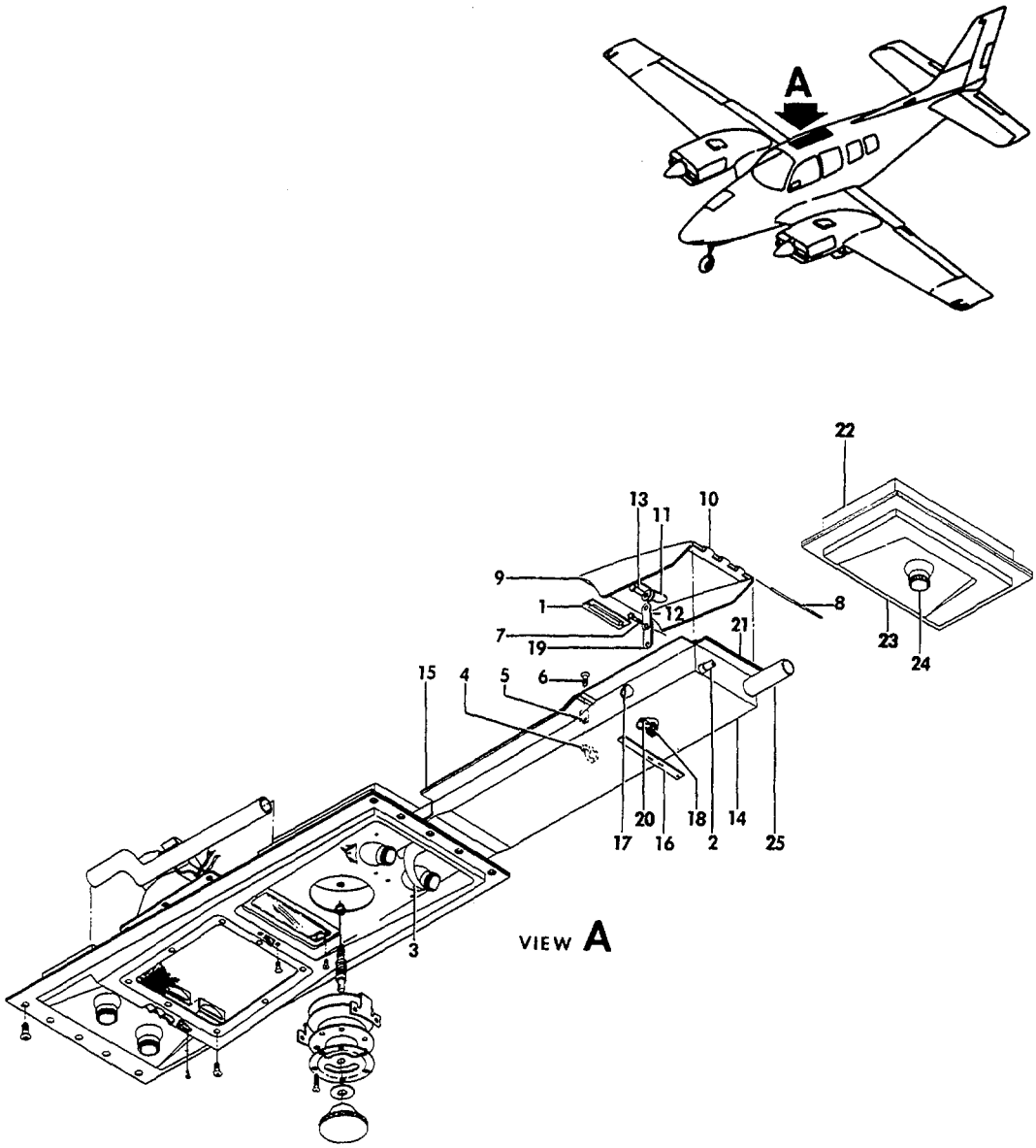

55-147-14

FIGURE 22-01.OVERHEAD PANEL AND DUCTS
/SHEET 1 OF 3 SHEETS/

ATA CODE & INDEX NO.	PART NO.	DESCRIPTION 1 2 3 4 5 6 7	UNITS PER ASSY	USABLE ON CODE
22-01	35-550562-35	DUCT INSTL,FRESH AIR/STD 4 AIR VALVES/.	NP	1
	35-550562-33	DUCT INSTL,FRESH AIR/OPT 5 AIR VALVES/.	NP	1
- 1	35-550562-97	. STRIP,STALL	1	1
- 2	35-550562-21	. TUBE,DRAIN.	1	1
- 3	95-380007	. CONTROL ASSY,PUSH PULL.	1	1
		/ATTACHING PARTS/		
- 4	AN742-4	. CLAMP	1	
- 5	1006960-2V014	. SPACER.	1	
- 6	AN515-10R	. SCREW	1	
	AN960-10	. WASHER.	1	
	MK1000-1032	. NUTPLATE.	1	
- 7	35-550532-85	. BOLT.	1	
	AN960-10	. WASHER.	2	
	AN393	. NUT	1	
		——*——		
	35-550562-601	. SCOOP ASSY,FRESH AIR.	1	2
	35-550562-607	. SCOOP ASSY,FRESH AIR.	1	3
		/ATTACHING PARTS/		
- 8	AN253-2-375	. PIN,HINGE	1	1
		——*——		
- 9	35-550562-51	. . SCOOP	1	1
- 10	35-550562-91	. . HINGE/SUPERSEDES 35-550562-42/.	1	1
- 11	AN743-13	. . BRACKET	2	1
	35-550562-45	. . ARM,AIR SCOOP	1	1
- 12	35-550562-87	. . LINK,AIR SCOOP.	1	2
		/ATTACHING PARTS/		
- 13	AN393	. PIN	1	
	AN960-10	. WASHER.	1	
	AN380-2-2	. PIN,COTTER.	1	
		——*——		
	35-550562-603	. DUCT ASSY,FRESH AIR/OPT 5 AIR VALVES/	1	2
	35-550562-609	. DUCT ASSY,FRESH AIR/OPT 5 AIR VALVES/	1	3
	35-550562-65	. DUCT ASSY,FRESH AIR/STD 4 AIR VALVES/	1	1
	35-550562-37	. . PAN/USED WITH STD 4 AIR VALVES/	1	1
- 14	35-550562-39	. . PAN/USED WITH OPT 5 AIR VALVES/	1	1
- 15	35-550562-61	. . COVER	1	1
- 16	35-550562-43	. . PLATE	1	1
- 17	35-550562-67	. . PAD	2	1
- 18	AN743-13	. . BRACKET	2	1
- 19	35-550562-87	. LINK.	1	1
		/ATTACHING PARTS/		
- 20	AN393	. PIN	1	
	AN380-2-2	. PIN,COTTER.	1	
		——*——		
- 21	35-550562-41	. HINGE,HALF.	1	1
	95-554036-71	. DUCT ASSY,FRESH AIR/OPT 5TH AIR VALVE/. . . .	1	4
	95-554036-75	. DUCT ASSY,FRESH AIR/OPT 5TH AIR VALVE/. . . .	1	5
	95-554036-67	. . COVER/OPT 5TH AIR VALVE/.	1	4
- 22	95-554036-77	. . COVER/OPT 5TH AIR VALVE	1	5
- 23	95-554036-69	. . PAN/OPT 5TH AIR VALVE/.	1	1
- 24	B2120-501	. . VALVE,FRESH AIR/OPT 5TH AIR VALVE/.	1	1
		/ATTACHING PARTS/		
	NAS384-8-6	. . SCREW	4	
	A1778-8Z1	. . NUT	4	
		——*——		
- 25	35-550562-59	. TUBE,FRESH AIR/OPT 5TH AIR VALVE/	1	1

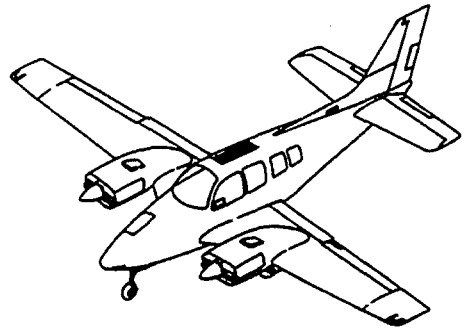

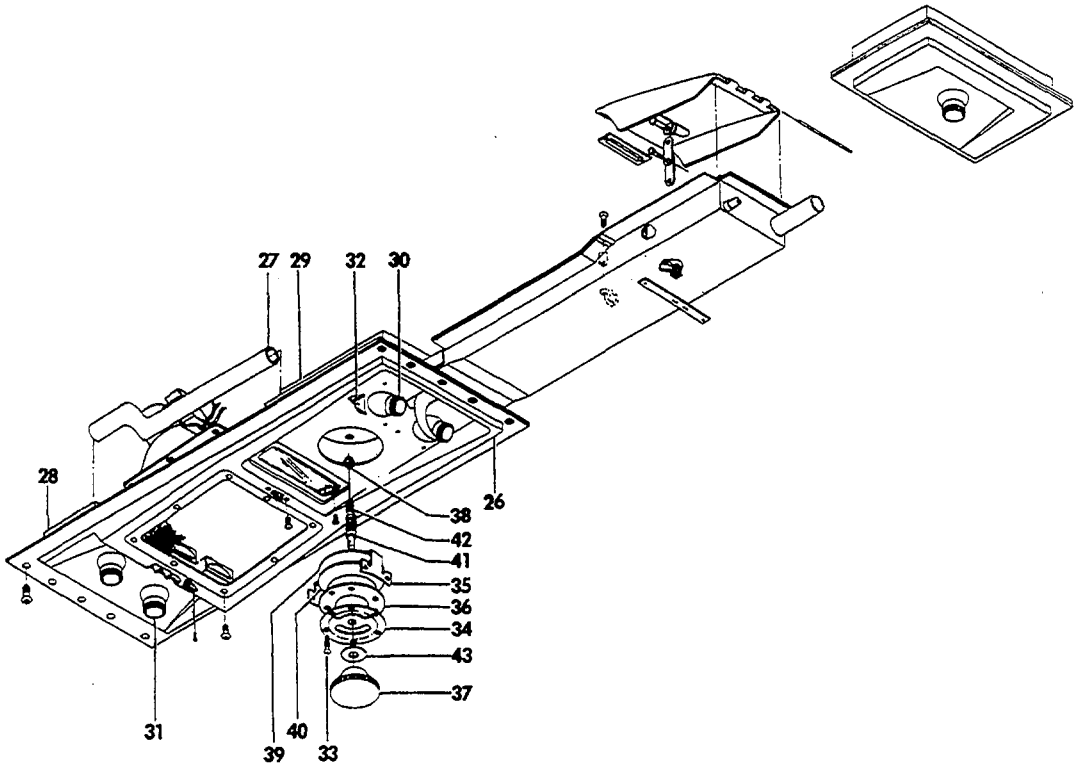

55-417-15

FIGURE 22-01.OVERHEAD PANEL AND DUCTS
/SHEET 2 OF 3 SHEETS/

ATA CODE & INDEX NO.	PART NO.	DESCRIPTION 1 2 3 4 5 6 7	UNITS PER ASSY	USABLE ON CODE
22-01	35-550561-607	. LIGHT AND DUCT ASSY,OVERHEAD.	1	1
- 26	35-550561-35	. . SHELL,OVERHEAD PANEL.	1	1
		/ATTACHING PARTS/		
	NAS384-6	. . SCREW	10	
	NAS394-6	. . WASHER.	10	
		——*——		
- 27	35-550561-37	. . TUBE.	2	1
- 28	35-550561-5	. . BOX,FWD	1	1
- 29	35-550561-33	. . BOX,AFT	1	1
- 30	B2155-501	. . VALVE,AIR OUTLET.	2	1
- 31	B2120-501	. . VALVE,AIR OUTLET.	2	1
		/ATTACHING PARTS/		
	NAS384-8-6	. . SCREW	4	
	A1778-82-1	. . NUT	4	
		——*——		
	35-550561-29	. . GASKET,AIR VALVE.	4	1
- 32	35-550561-41	. . STIFFENER	1	1
	35-550561-19	. . SUPPORT,FRONT PANEL	1	1
	35-550055	. . VALVE ASSY,AIR OUTLET	1	1
		/ATTACHING PARTS/		
- 33	NAS384-6-6P	. . SCREW	6	
	A6052-6Z-1	. . NUT	6	
		——*——		
- 34	35-550059	. . . CUP,AIR VALVE	1	1
- 35	35-550061	. . . BRACKET,AIR VALVE	1	1
- 36	35-550060	. . . COLLAR,AIR VALVE.	1	1
- 37	35-550057	. . . KNOB,AIR VALVE.	1	1
		/ATTACHING PARTS/		
- 38	AN320-4	. . . NUT	1	
	AN960-416L	. . . WASHER.	1	
	AN380-2-2	. . . PIN,COTTER.	1	
		——*——		
- 39	35-550062	. . . DISC ASSY,AIR VALVE	1	1
	35-550062-2	. . . . DISC.	1	1
	35-550075	. . . . NUT	1	1
- 40	35-550063	. . . SEAL.	1	1
	AN960-416	. . . WASHER.	1	1
- 41	35-550058-6	. . . COLLAR.	1	1
- 42	35-550058-2	. . . SCREW	1	1
		/ATTACHING PARTS/		
	AN565A6H4	. . . SCREW,SET	1	
		——*——		
- 43	1028084D012	. . . WASHER.	1	1

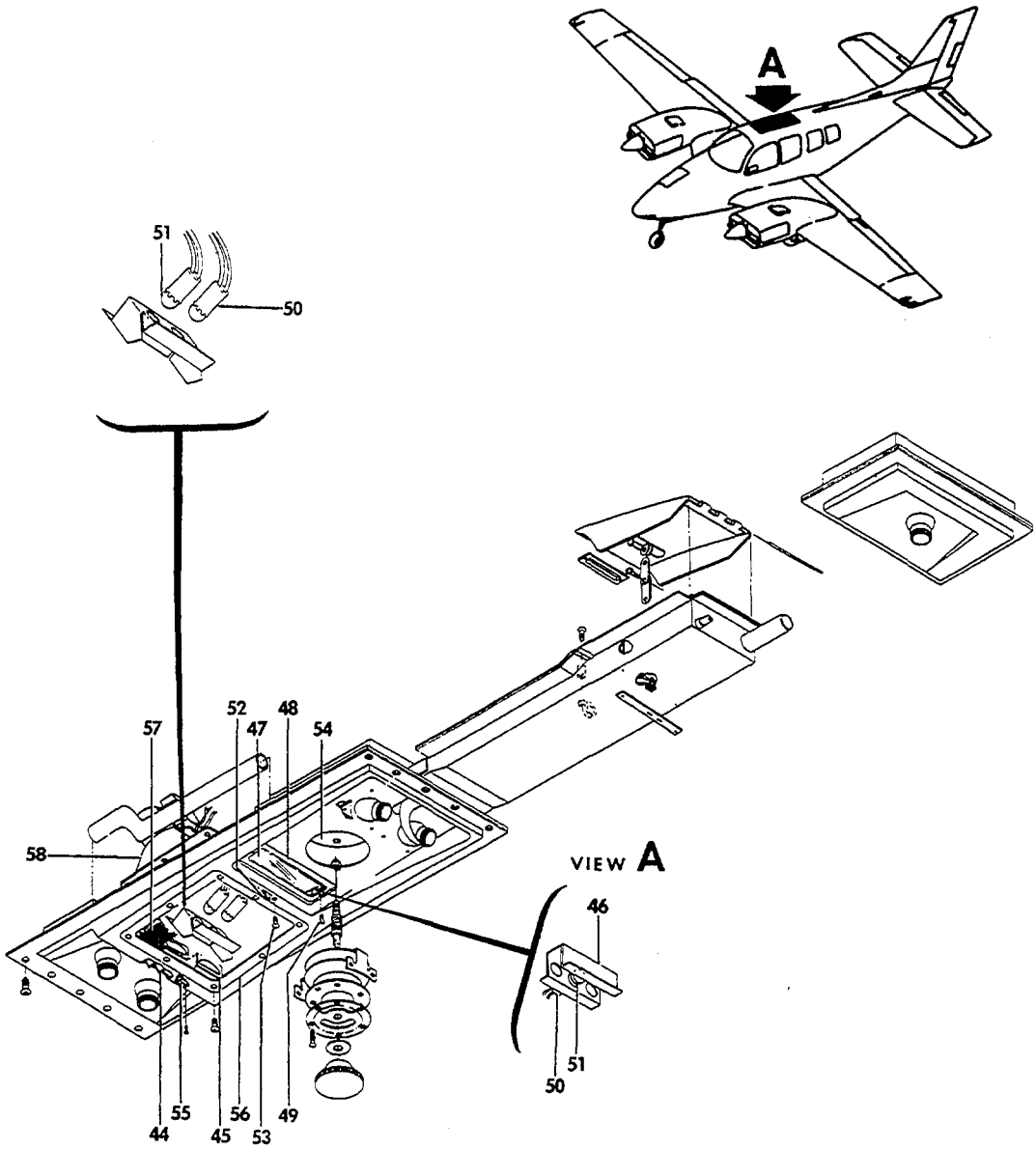

55-147-16

FIGURE 22-01.OVERHEAD PANEL AND DUCTS
/SHEET 3 OF 3 SHEETS/

ATA CODE & INDEX NO.	PART NO.	DESCRIPTION 1 2 3 4 5 6 7	UNITS PER ASSY	USABLE ON CODE
22-01 - 44	35-550561-45	. . REFLECTOR ASSY.	1	1
	35-550561-13	. . . REFLECTOR	1	1
	35-550561-47	. . . BAFFLE.	1	1
- 45	35-550561-43	. . LENS/RED/	2	1
- 46	35-550561-15	. . REFLECTOR	1	1
- 47	35-550561-11	. . LENS.	1	1
- 48	35-550561-9	. . RETAINER,LENS	1	1
		/ATTACHING PARTS/		
- 49	NAS387-632	. . SCREW	2	
	AN960-6	. . WASHER.	2	
	AN365-632	. . NUT	2	
		----*----		
- 50	35-550561-53	. . SOCKET ASSY	5	1
- 51	303	. . BULB.	5	1
- 52	55-32-1	. . SWITCH,SLIDE.	1	1
		/ATTACHING PARTS/		
- 53	AN515-4	. . SCREW	2	
	AN365-440	. . NUT	2	
		----*----		
- 54	35-550561-49	. . BLOCK	1	1
- 55	35-364022	. . SHUTTER	1	1
		/ATTACHING PARTS/		
	AN515-6	. . SCREW	1	
	100943YN012R	. . SPRING.	1	
	AN365-632	. . NUT	1	
		----*----		
- 56	35-344152	. . FRAME,SPEAKER GRILL	1	1
		/ATTACHING PARTS/		
	NAS387-6	. . SCREW	8	
	AN960-6	. . WASHER.	8	
	100696D-ZF004	. . SPACER.	4	
		----*----		
- 57	35-344169	. . GRILL,SPEAKER	1	1
- 58	35-344158	. SPEAKER ASSY,OVERHEAD	1	1
	P6V3	. . SPEAKER	1	1
	S65X	. . TRANSFORMER,SPEAKER	1	1

CODES OF EFFECTIVITY

1 TC-1 THRU TC-954 EXCEPT TC-350
2 TC-1 THRU TC-52
3 TC-53 THRU TC-954 EXCEPT TC-350
4 TC-1 THRU TC-75
5 TC-76 THRU TC-954 EXCEPT TC-350

"END"

21-22-10
OVERHEAD PANEL AND DUCTS
TC-350 AND TC-955 THRU TC-963
TE-1 THRU TE-10

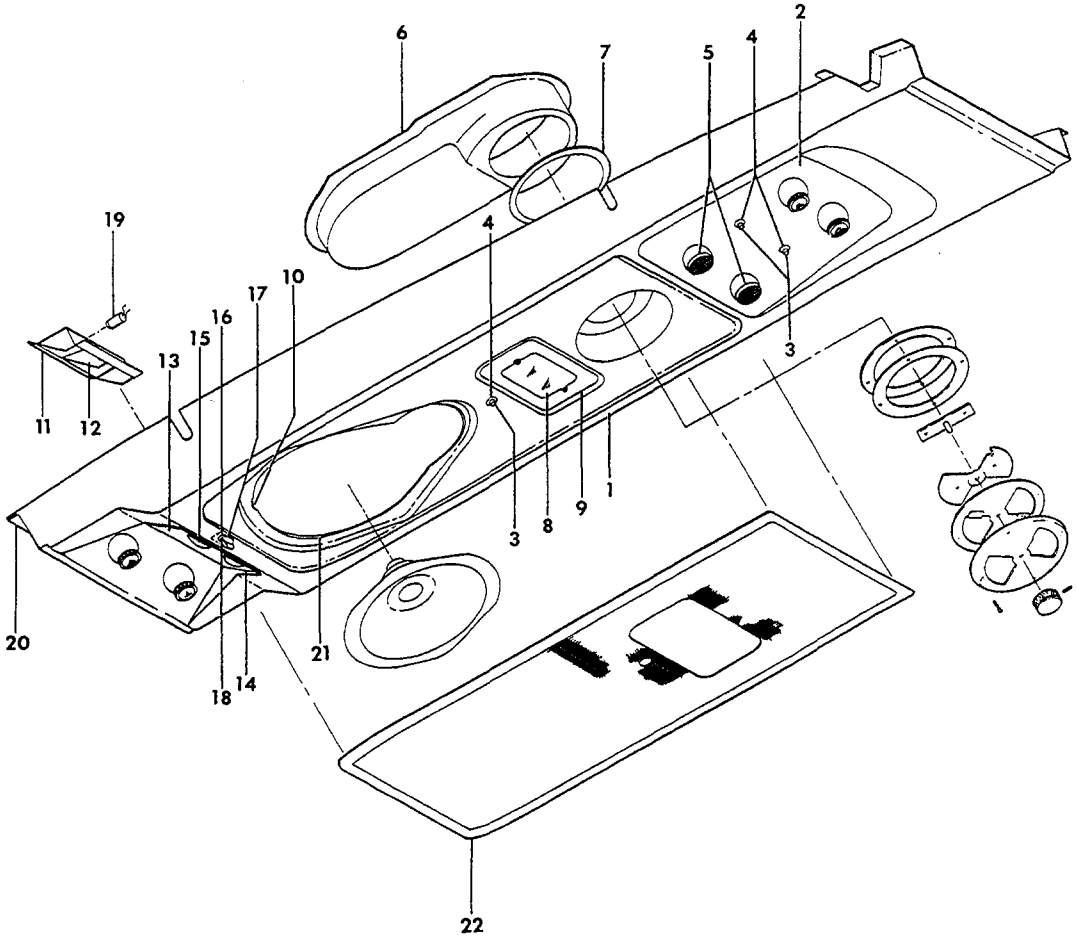

55-417-37

FIGURE 22-10.OVERHEAD PANEL AND DUCTS
/SHEET 1 OF 3 SHEETS/

ATA CODE & INDEX NO.	PART NO.	DESCRIPTION 1 2 3 4 5 6 7	UNITS PER ASSY	USABLE ON CODE
22-10	96-550013-1	PANEL INSTL,OVERHEAD FRESH AIR/4 OUTLETS/ . . .	NP	1
	96-550013-5	PANEL INSTL,OVERHEAD FRESH AIR/5 OUTLETS/ . . .	NP	1
	96-550013-9	PANEL INSTL,OVERHEAD FRESH AIR/6 OUTLETS/ . . .	NP	1
	96-550013-602	. PANEL ASSY,OVERHEAD FRESH AIR/4 OUTLETS/. . .	1	2
	96-550013-603	. PANEL ASSY,OVERHEAD FRESH AIR/4 OUTLETS/. . .	1	3
- 1	96-550013-651	. . SHELL,OVERHEAD PANEL.	1	1
		/ATTACHING PARTS/		
	AN531-6R8	. . SCREW	9	
	NAS395-31-1	. . NUT	9	
		——*——		
- 2	96-550013-79	. . PAN/4 OUTLETS/.	1	2
	96-550013-81	. . PAN/4 OUTLETS/.	1	3
		/ATTACHING PARTS/		
	NAS387-632-8P	. . SCREW	6	
		——*——		
- 3	L18366-1	. . SWITCH,LIGHT.	3	1
- 4	96-550013-51	. . GASKET,LIGHT SWITCH	3	1
- 5	1870	. . LIGHT,READING	2	1
		/ATTACHING PARTS/		
	NAS387-632-8P	. . SCREW	4	
	AN960-6L	. . WASHER.	4	
	MS20365-632	. . NUT/SUPERSEDES AN365-632/	4	
		——*——		
- 6	96-550013-35	. . PAN,EXHAUST VENT.	1	1
		/ATTACHING PARTS/		
	AN515C6R8	. . SCREW	3	
		——*——		
- 7	96-550013-37	. . GASKET,PAN.	1	1
- 8	B3550-1	. . LIGHT,DOME.	1	1
		/ATTACHING PARTS/		
	NAS387-632-8P	. . SCREW	4	
		——*——		
- 9	96-550013-53	. . GASKET DOME LIGHT	1	1
- 10	96-550013-33	. . GASKET,SPEAKER DOME	1	1
- 11	96-550013-29	. . REFLECTOR,OVERHEAD LIGHT.	1	1
- 12	96-550013-31	. . BAFFLE,OVERHEAD LIGHT REFLECTOR	1	1
- 13	96-550013-43	. . COVER,OVERHEAD LIGHT.	1	1
		/ATTACHING PARTS/		
	NAS387-632-8P	. . SCREW	2	
		——*——		
- 14	96-550013-47	. . GASKET,OVERHEAD LIGHT COVER	1	1
- 15	96-550013-45	. . LENS,RED OVERHEAD LIGHT	1	1
- 16	96-550013-69	. . LENS,OVERHEAD MAP LIGHT	1	1
- 17	35-364022	. . SHUTTER,OVERHEAD MAP LIGHT.	1	1
		/ATTACHING PARTS/		
	AN515C6R12	. . SCREW	1	
	MS20365-632	. . NUT/SUPERSEDES AN365-632/	1	
		——*——		
- 18	100943YN012R	. . SPRING,SHUTTER COMPRESSION.	1	1
- 19	SC2611	. . SOCKET,OVERHEAD LIGHT	1	1
	303	. . BULB,OVERHEAD LIGHT	1	1
- 20	96-550013-39	. DOUBLER,SHELL	1	1
- 21	96-550013-49	. DOME,SPEAKER.	1	1
- 22	96-554011	. GRILL ASSY,SPEAKER.	1	1
		/ATTACHING PARTS/		
	NAS387-632-8P	. SCREW	6	
		——*——		

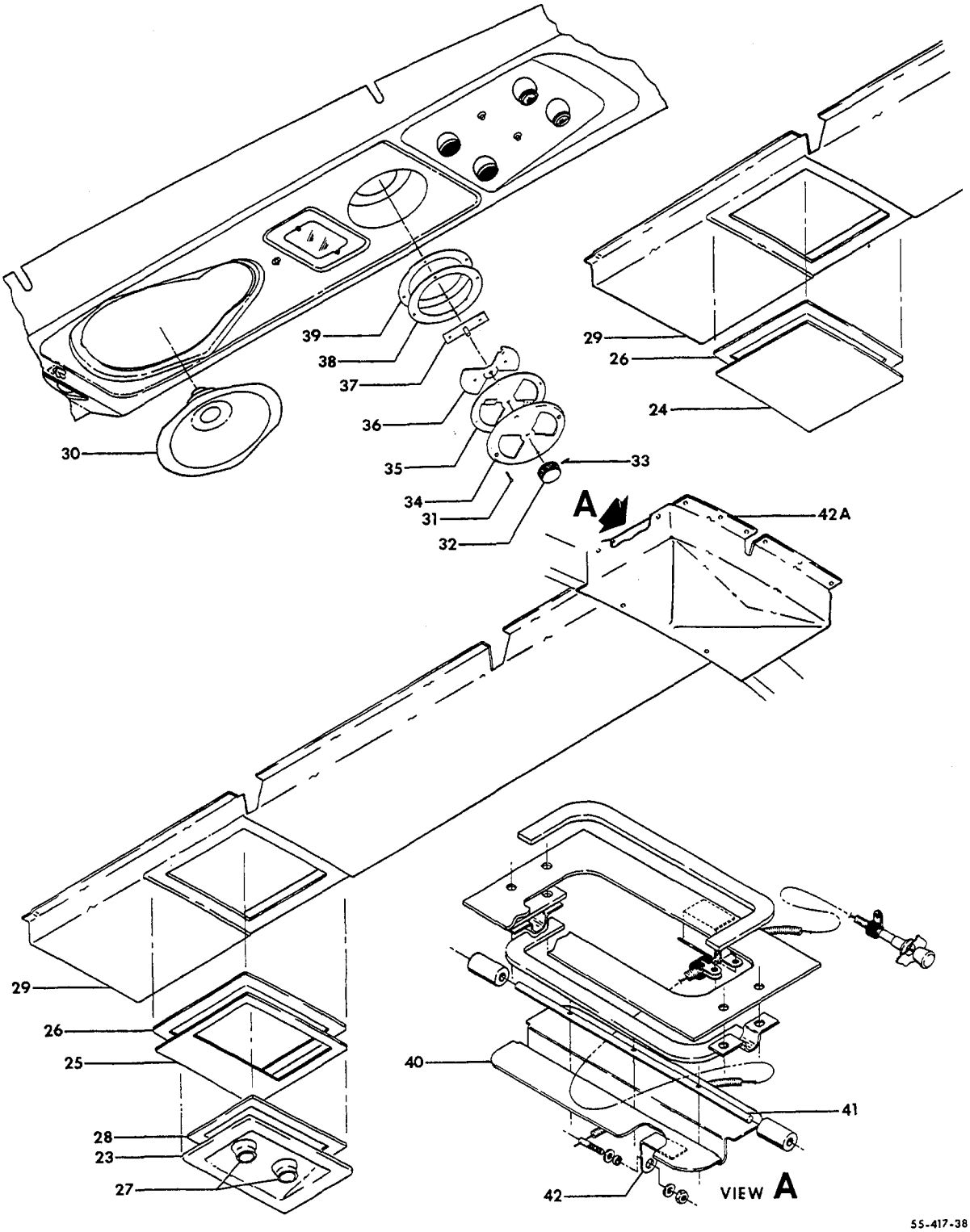

FIGURE 22-10. OVERHEAD PANEL AND DUCTS
/SHEET 2 OF 3 SHEETS/

ATA CODE & INDEX NO.	PART NO.	DESCRIPTION 1 2 3 4 5 6 7	UNITS PER ASSY	USABLE ON CODE
22-10 - 23	96-550013-67	. PAN,AFT/2 OUTLETS/.	1	1
	96-550013-65	. PAN,AFT/1 OUTLET/	1	1
- 24	96-550013-75	. DOOR/WITHOUT OUTLETS/	1	1
- 25	96-550013-85	. DOOR/1 OR 2 OUTLETS/	1	1
		/ATTACHING PARTS/		
	NAS384-6P	. SCREW	5	
	NAS395-6-1	. NUT	5	
		——*——		
- 26	96-550013-77	. GASKET,DOOR/WITH OR WITHOUT OUTLETS/.	1	1
- 27	2373	. VALVE,AIR	6	1
		/ATTACHING PARTS/		
	NAS384-632-8P	. SCREW	4	
	NAS446-2-1	. NUT	4	
		——*——		
- 28	96-550013-91	. GASKET,FIFTH AND SIXTH SEAT FRESH AIR PAN . .	1	1
- 29	96-550013-21	. SHELL,AFT OVERHEAD PANEL.	1	1
- 30	5869064B	SPEAKER,OVERHEAD/SUPERSEDES 69C4877/.	1	1
		/ATTACHING PARTS/		
	AN525-832R8	SCREW	4	
		——*——		
	96-550015	. VALVE ASSY,FRESH AIR INLET SHUTOFF.	1	1
		/ATTACHING PARTS/		
- 31	NAS387-832P	. SCREW	4	
	MK2000-08	. NUTPLATE.	4	
		——*——		
	96-550015-23	. . KNOB ASSY,EXHAUST VALVE	1	1
	96-554013	. . . PLACARD,KNOB.	1	1
- 32	96-550015-17	. . . KNOB,EXHAUST VALVE/ORDER 96-550015-23/. .	NP	1
		/ATTACHING PARTS/		
- 33	AN565D8H8	. . . SCREW,SET	1	
		——*——		
	96-550015-21	. . PLATE ASSY,EXHAUST VALVE.	1	1
- 34	96-550015-13	. . . PLATE,EXHAUST VALVE	1	1
- 35	35-410455-1	. . . COVER,EXHAUST VALVE	1	1
	96-550015-1	. . SHUTTER ASSY,EXHAUST VALVE.	1	1
- 36	96-550015-9	. . . SHUTTER,EXHAUST VALVE	1	1
- 37	96-550015-3	. . . WELD ASSY,SHAFT AND ARM	1	1
	96-550015-19	. . RING ASSY,EXHAUST VALVE	1	1
- 38	35-410154-3	. . . SHIM,EXHAUST VALVE RING	1	1
- 39	96-550015-11	. . . RING,EXHAUST VALVE BACK-UP.	1	1
	96-440015-603	DOOR ASSY,OVERHEAD AIR SHUTOFF.	1	1
- 40	96-440015-23	. DOOR.	1	1
- 41	96-440015-17	. SHAFT	1	1
- 42	96-440015-37	. BRACKET	1	1
		/ATTACHING PARTS/		
	AN515-6R	. SCREW	3	
	MS20365-632	. NUT	3	
		——*——		
- 42A	95-554043-1	. DUCT,OVERHEAD AIR ADAPTER	1	1
		/ATTACHING PARTS/		
	AN515-6-7	. SCREW	6	
	AN960-8L	. WASHER.	15	
	A1777-6Z3	. NUT/SUPERSEDES A1777-6Z1/	6	
		——*——		

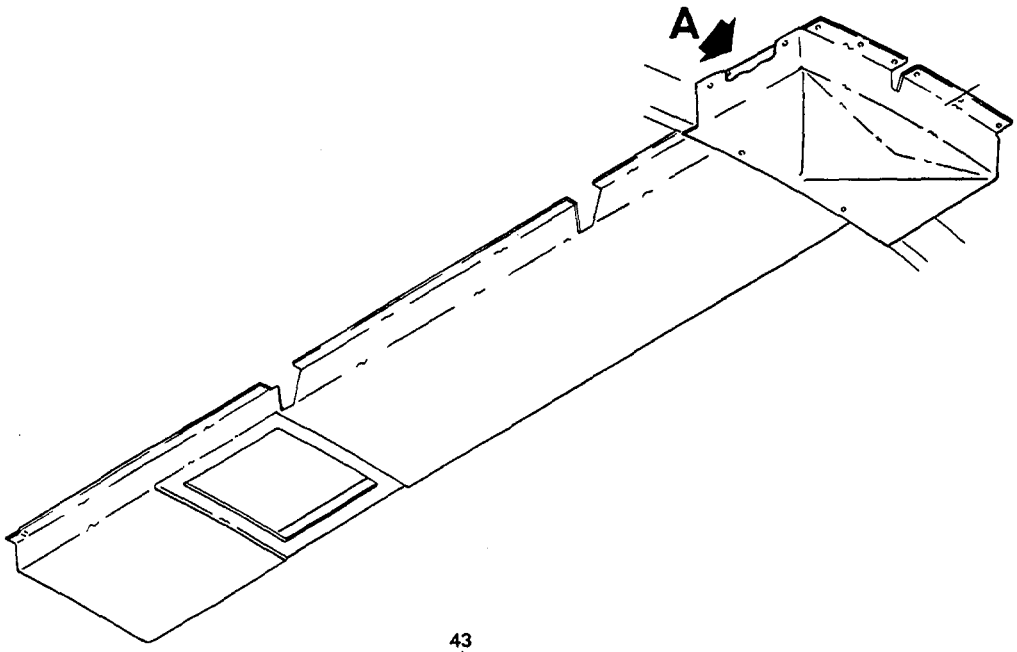

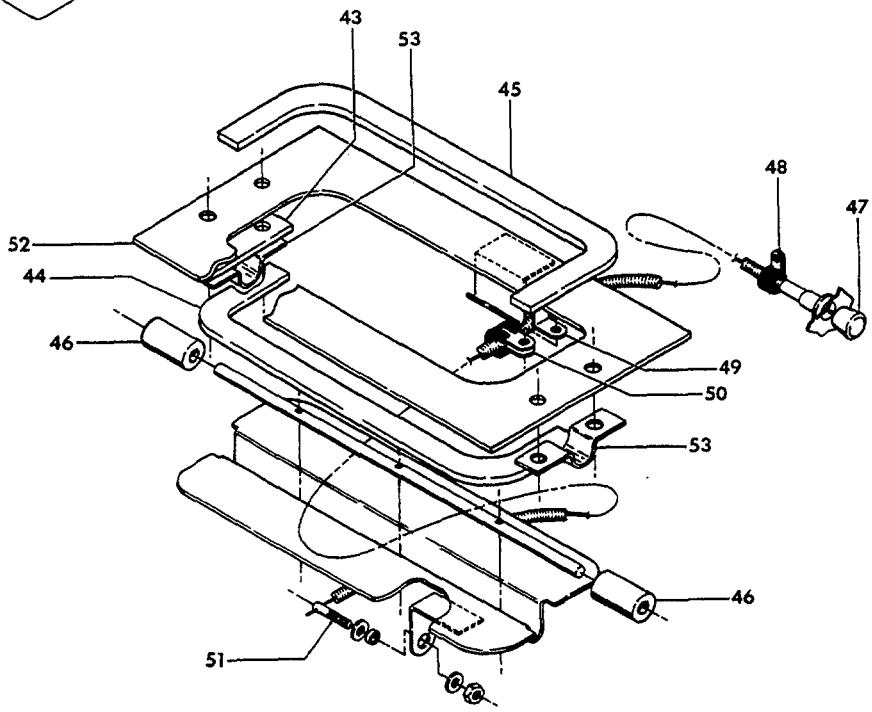

VIEW A

55-417-39

FIGURE 22-10.OVERHEAD PANEL AND DUCTS
/SHEET 3 OF 3 SHEETS/

ATA CODE & INDEX NO.	PART NO.	DESCRIPTION 1 2 3 4 5 6 7	UNITS PER ASSY	USABLE ON CODE
22-10 - 43	96-440015-21	SPACER.	1	1
- 44	96-440015-27	SEAL,LOWER.	1	1
- 45	96-440015-29	SEAL,UPPER.	1	1
- 46	96-440015-31	BEARING	2	1
- 47	35-380051-15	CONTROL,OVERHEAD FRESH AIR.	1	1
		/ATTACHING PARTS/		
- 48	AN742-3	CLAMP	AR	
	AN515-10R	SCREW	AR	
	MS20365-1032	NUT	AR	
		——*——		
- 49	AN743-13	BRACKET	1	1
- 50	AN742-3	CLAMP	1	1
		/ATTACHING PARTS/		
	AN515-10R	SCREW	1	
	MS20365-1032	NUT	1	
		——*——		
- 51	35-550520	PIN	1	1
	102933S4ZJ0093	SPACER.	1	1
	AN960-10	WASHER.	1	1
	MS20365-1032	NUT	1	1
- 52	96-440015-13	DOUBLER,OVERHEAD DOOR	1	1
- 53	96-440015-19	CLAMP	2	1
		/ATTACHING PARTS/		
	AN515-8R	SCREW	2	
	MS20365-832	NUT	2	
		——*——		

CODES OF EFFECTIVITY

1 TC-350 AND
TC-955 THRU TC-963
TE-1 THRU TE-10

2 TC-350 AND
TE-1 THRU TE-10

3 TC-955 THRU TC-963

"END"

21-22-20
OVERHEAD PANEL AND DUCTS
TC-964 THRU TC-1402
TE-11 THRU TE-767

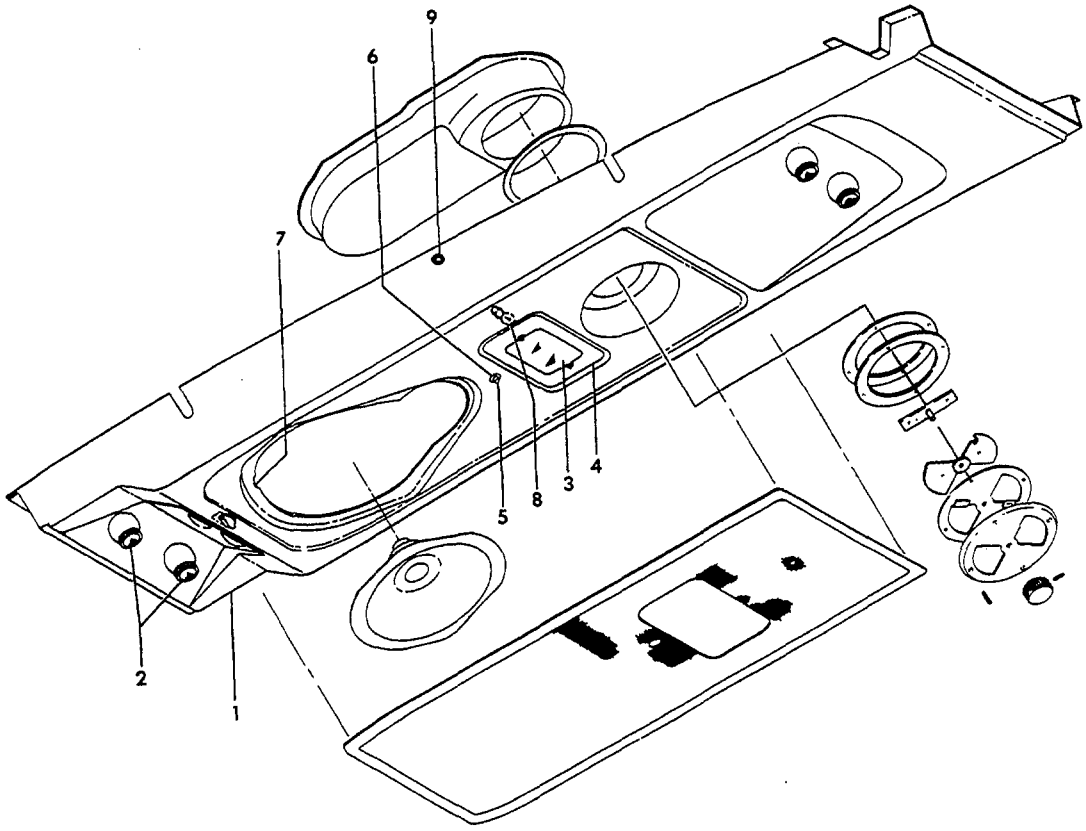

55-417-31

FIGURE 22-20.OVERHEAD PANEL AND DUCTS
/SHEET 1 OF 4 SHEETS/

ATA CODE & INDEX NO.	PART NO.	DESCRIPTION 1 2 3 4 5 6 7	UNITS PER ASSY	USABLE ON CODE
22-20	96-550013-1	PANEL INSTL,OVERHEAD FRESH AIR/4 AIR VALVES & . 2 READING LIGHTS/	NP	1
	96-550016-1	PANEL INSTL,OVERHEAD FRESH AIR/4 AIR VALVES & . 2 READING LIGHTS/	NP	2
	96-550013-3	PANEL INSTL,OVERHEAD FRESH AIR/4 AIR VALVES & . NO READING LIGHTS/	NP	1
	96-550016-3	PANEL INSTL,OVERHEAD FRESH AIR/4 AIR VALVES & . NO READING LIGHTS/	NP	2
	96-550013-5	PANEL INSTL,OVERHEAD FRESH AIR/5 AIR VALVES & . 2 READING LIGHTS/	NP	1
	96-550016-5	PANEL INSTL,OVERHEAD FRESH AIR/5 AIR VALVES & . 2 READING LIGHTS/	NP	2
	96-550013-7	PANEL INSTL,OVERHEAD FRESH AIR/5 AIR VALVES & . NO READING LIGHTS/	NP	1
	96-550016-7	PANEL INSTL,OVERHEAD FRESH AIR/5 AIR VALVES & . NO READING LIGHTS/	NP	2
	96-550013-9	PANEL INSTL,OVERHEAD FRESH AIR/6 AIR VALVES & . 2 READING LIGHTS/	NP	1
	96-550016-9	PANEL INSTL,OVERHEAD FRESH AIR/6 AIR VALVES & . 2 READING LIGHTS/	NP	2
	96-550013-11	PANEL INSTL,OVERHEAD FRESH AIR/6 AIR VALVES & . NO READING LIGHTS/	NP	1
	96-550016-11	PANEL INSTL,OVERHEAD FRESH AIR/6 AIR VALVES & . NO READING LIGHTS/	NP	2
	96-550013-605	. PANEL ASSY,OVERHEAD/2 AIR VALVES. . . . . AND NO READING LIGHTS/	1	3
	96-550013-625	. PANEL ASSY,OVERHEAD/2 AIR VALVES. . . . . AND NO READING LIGHTS/	1	4
	96-550013-606	. PANEL ASSY,OVERHEAD/2 AIR VALVES. . . . . AND NO READING LIGHTS/	1	5
	96-550013-626	. PANEL ASSY,OVERHEAD/2 AIR VALVES. . . . . AND NO READING LIGHTS/	1	6
- 1	96-550013-93	. . SHELL,OVERHEAD PANEL FWD.	1	1
	96-550013-147	. . SHELL,OVERHEAD PANEL FWD. . . . . /ATTACHING PARTS/	1	2
	AN531-6R8	. . SCREW	9	
	NAS395-31-1	. . NUT	9	
		——*——		
- 2	2373	. . VALVE,PILOT AND COPILOT AIR . . . . . /ATTACHING PARTS/	2	7
	NAS384-6-8P	. . SCREW	4	
	NAS446-2-1	. . NUT	4	
		——*——		
- 3	B3550-1	. . LIGHT,DOME. . . . . /ATTACHING PARTS/	1	7
	NAS387-632-8P	. . SCREW	4	
	NAS697A06	. . NUTPLATE.	4	
		——*——		
- 4	96-550013-53	. . GASKET,DOME LIGHT	1	7
- 5	L18366-1	. . SWITCH,DOME LIGHT	1	7
- 6	96-550013-51	. . GASKET,DOME LIGHT SWITCH.	1	7
- 7	96-550013-33	. . GASKET,SPEAKER.	1	7
- 8	303	. . BULB,DOME LIGHT	1	7
- 9	MS35489-9	. . GROMMET,DOME LIGHT WIRING.. . . . . /SUPERSEDES AN931-5-9/	1	7

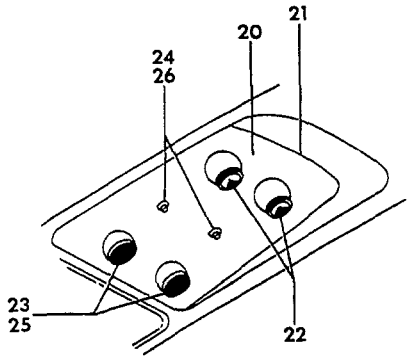

VIEW A

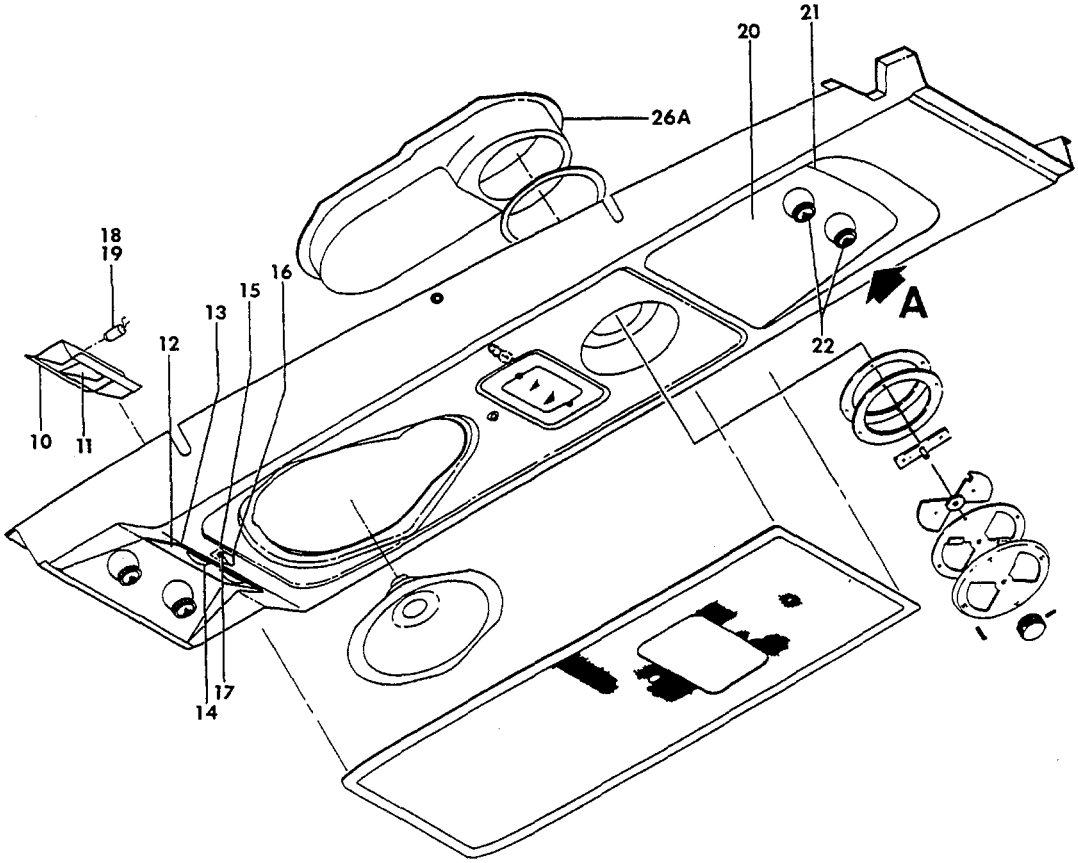

55-417-32

FIGURE 22-20.OVERHEAD PANEL AND DUCTS
/SHEET 2 OF 4 SHEETS/

ATA CODE & INDEX NO.	PART NO.	DESCRIPTION 1 2 3 4 5 6 7	UNITS PER ASSY	USABLE ON CODE
22-20 - 10	96-550013-29	. . REFLECTOR,MAP LIGHT	1	1
- 11	96-550013-31	. . BAFFLE,MAP LIGHT REFLECTOR.	1	1
- 12	96-550013-43	. . COVER,MAP LIGHT	1	1
		/ATTACHING PARTS/		
	NAS387-632-8P	. . SCREW	2	
	NAS391-6P	. . WASHER.	2	
	NAS697A06	. . NUTPLATE.	2	
		——*——		
- 13	96-550013-47	. . GASKET,MAP LIGHT COVER.	1	1
- 14	96-550013-45	. . LENS,RED MAP LIGHT.	1	1
- 15	96-550013-69	. . LENS,WHITE MAP LIGHT.	1	1
- 16	35-364022	. . SHUTTER,MAP LIGHT	1	1
		/ATTACHING PARTS/		
	AN515C6R12	. . SCREW	1	
	MS20365-632	. . NUT/SUPERSEDES AN365-632/	1	
		——*——		
- 17	100943YN012R	. . SPRING,SHUTTER COMPRESSION.	1	1
- 18	35-550561-53	. . SOCKET,MAP LIGHT/SUPERSEDES SC2611/	2	1
- 19	303	. . BULB,MAP LIGHT.	2	1
	96-550013-607	. PANEL ASSY,OVERHEAD FRESH AIR/NO LIGHTS/. . .	1	8
	96-550013-608	. PANEL ASSY,OVERHEAD FRESH AIR/WITH LIGHTS/. .	1	9
- 20	96-550013-97	. . PAN,THIRD AND FOURTH SEAT FRESH AIR	1	8
	96-550013-95	. . PAN,THIRD AND FOURTH SEAT FRESH AIR	1	9
		/ATTACHING PARTS/		
	NAS387-632-8P	. . SCREW	8	
	NAS697A06	. . NUTPLATE.	8	
		——*——		
- 21	96-550013-83	. . GASKET,THIRD AND FOURTH SEAT FRESH AIR PAN.	1	7
- 22	2373	. . VALVE,THIRD AND FOURTH SEAT AIR	2	7
		/ATTACHING PARTS/		
	NAS384-6-8P	. . SCREW	4	
	NAS446-2-1	. . NUT	4	
		——*——		
- 23	1870	. . LIGHT,READING	2	9
- 24	L18366-1	. . SWITCH,READING LIGHT.	2	9
	96-550013-610	. PANEL ASSY,OVERHEAD FRESH AIR/WITH LIGHTS/. .	1	8
	96-550013-95	. . PAN,THIRD AND FOURTH SEAT FRESH AIR	1	8
		/ATTACHING PARTS/		
	NAS387-632-8P	. . SCREW	8	
	NAS697A06	. . NUT	8	
		——*——		
	96-550013-83	. . GASKET,THIRD AND FOURTH SEAT FRESH AIR PAN.	1	8
	2373	. . VALVE,THIRD AND FOURTH SEAT AIR	2	8
		/ATTACHING PARTS/		
	NAS384-6-8P	. . SCREW	4	
	NAS446-2-1	. . NUT	4	
		——*——		
- 25	1870	. . LIGHT,READING	2	8
- 26	L18366-1	. . SWITCH,READING LIGHT.	2	8
- 26A	96-550013-35	. PAN,EXHAUST VENT.	1	7
		/ATTACHING PARTS/		
	AN530-6R8	. SCREW	3	
	A1785-6Z1	. NUTPLATE.	3	
		——*——		

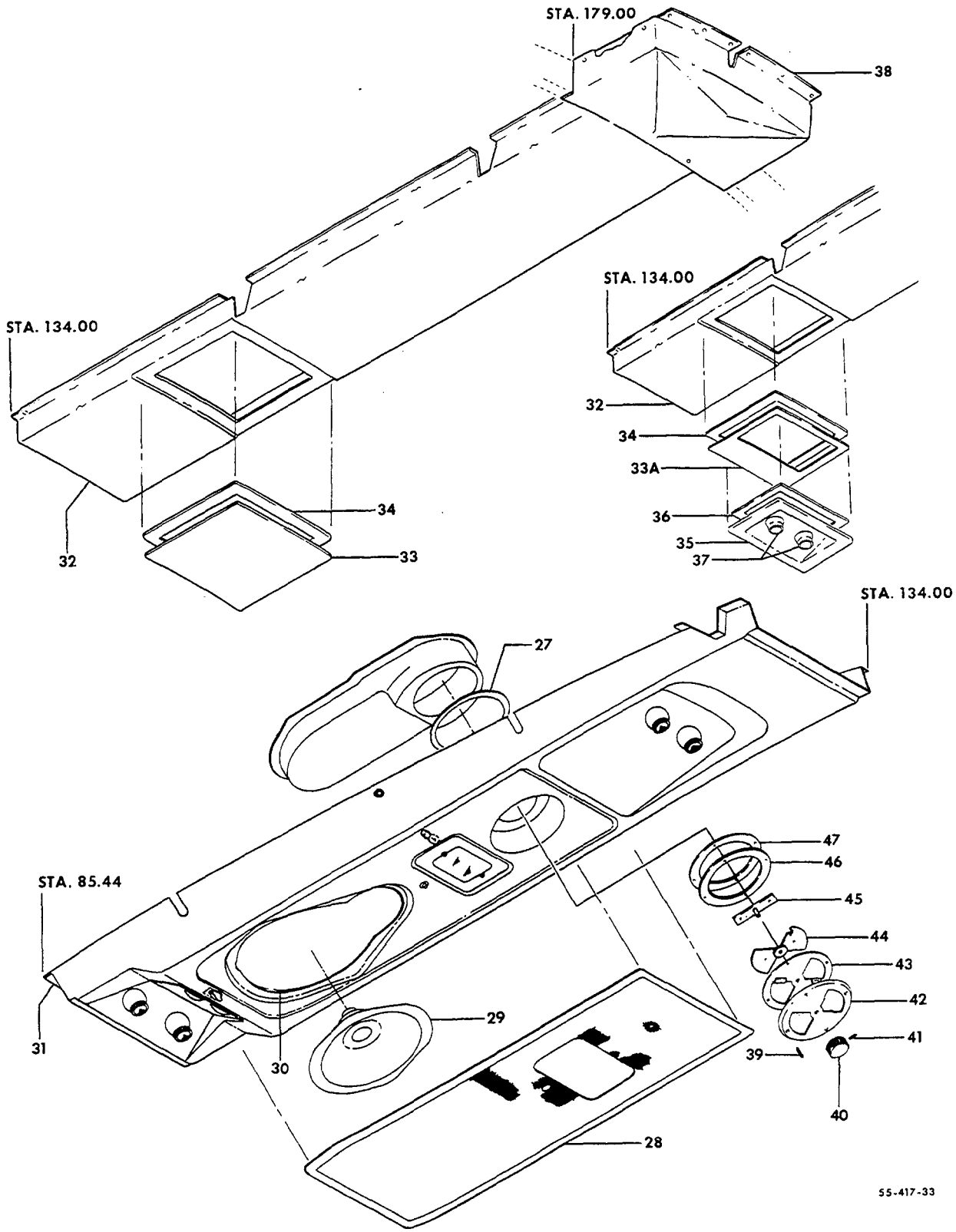

FIGURE 22-20.OVERHEAD PANEL AND DUCTS
/SHEET 3 OF 4 SHEETS/

ATA CODE & INDEX NO.	PART NO.	DESCRIPTION 1 2 3 4 5 6 7	UNITS PER ASSY	USABLE ON CODE
22-20 - 27	96-550013-37	. GASKET,EXHAUST VENT PAN	1	7
- 28	96-554011	. GRILL ASSY,OVERHEAD SPEAKER	1	7
		/ATTACHING PARTS/		
	NAS387-632-8P	. SCREW	8	
	MF1000-632	. NUTPLATE	8	
		——*——		
- 29	58690648	. SPEAKER,OVERHEAD/SUPERSEDES 69C4877/	1	7
		/ATTACHING PARTS/		
	AN525-832R8	. SCREW	4	
	NAS697A08	. NUTPLATE	4	
		——*——		
- 30	96-550013-49	. DOME,OVERHEAD SPEAKER	1	7
- 31	96-550013-39	. DOUBLER,FWD SHELL	1	7
- 32	96-550013-117	. SHELL,OVERHEAD PANEL AFT	1	7
		/ATTACHING PARTS/		
	AN504-6R	. SCREW,AFT	3	
	AN531-6R8	. SCREW,FWD	9	
	NAS395-31-1	. NUT,FWD	9	
		——*——		
- 33	96-550013-75	. DOOR,OVERHEAD PANEL/WITHOUT AIR OUTLETS/	1	7
- 33A	96-550013-85	. DOOR,OVERHEAD PANEL/WITH AIR OUTLETS/	1	7
		/ATTACHING PARTS/		
	NAS384-6P	. SCREW	5	
	NAS395-6-1	. NUT	5	
		——*——		
- 34	96-550013-77	. GASKET,OVERHEAD PANEL DOOR	1	7
- 35	96-550013-67	. PAN,FIFTH AND SIXTH SEAT FRESH AIR	1	7
		/WITH 2 AIR OUTLETS/		
	96-550013-65	. PAN,FIFTH AND SIXTH SEAT FRESH AIR	1	7
		/WITH 1 AIR OUTLET/		
- 36	96-550013-91	. GASKET,FIFTH AND SIXTH SEAT FRESH AIR PAN	1	7
- 37	2373	. VALVE,FIFTH AND SIXTH SEAT AIR	2	7
		/ATTACHING PARTS/		
	NAS384-6-8P	. SCREW	4	
	NAS446-2-1	. NUT	4	
		——*——		
- 38	95-554043-1	. DUCT,OVERHEAD AIR ADAPTER	1	7
		/ATTACHING PARTS/		
	AN515-6-7	. SCREW	6	
	AN960-8L	. WASHER	15	
	A1777-6Z3	. NUT/SUPERSEDES A1777-6Z1/	6	
		——*——		
	96-550015-601	VALVE ASSY,OVERHEAD CABIN EXHAUST	1	7
		/ATTACHING PARTS/		
- 39	NAS387-832P	SCREW	4	
	MK2000-08	NUTPLATE	4	
		——*——		
	96-550015-23	. KNOB ASSY,EXHAUST VALVE	1	7
	96-554013	. . PLACARD,KNOB	1	7
- 40	96-550015-17	. . KNOB,EXHAUST VALVE/ORDER 96-550015-23/	NP	7
		/ATTACHING PARTS/		
- 41	AN565D8H8	. . SCREW,SET	1	
		——*——		
	96-550015-21	. PLATE ASSY,EXHAUST VALVE	1	7
- 42	96-550015-13	. . PLATE,EXHAUST VALVE	1	7
- 43	35-410455-1	. . COVER,EXHAUST VALVE	1	7
	96-550015-1	. SHUTTER ASSY,EXHAUST VALVE	1	7
- 44	96-550015-9	. . SHUTTER,EXHAUST VALVE	1	7
- 45	96-550015-3	. . WELD ASSY,SHAFT AND ARM	1	7
	96-550015-19	. RING ASSY,EXHAUST VALVE	1	7
- 46	35-410154-3	. . SHIM,EXHAUST VALVE RING	1	7
- 47	96-550015-11	. . RING,EXHAUST VALVE BACK-UP	1	7

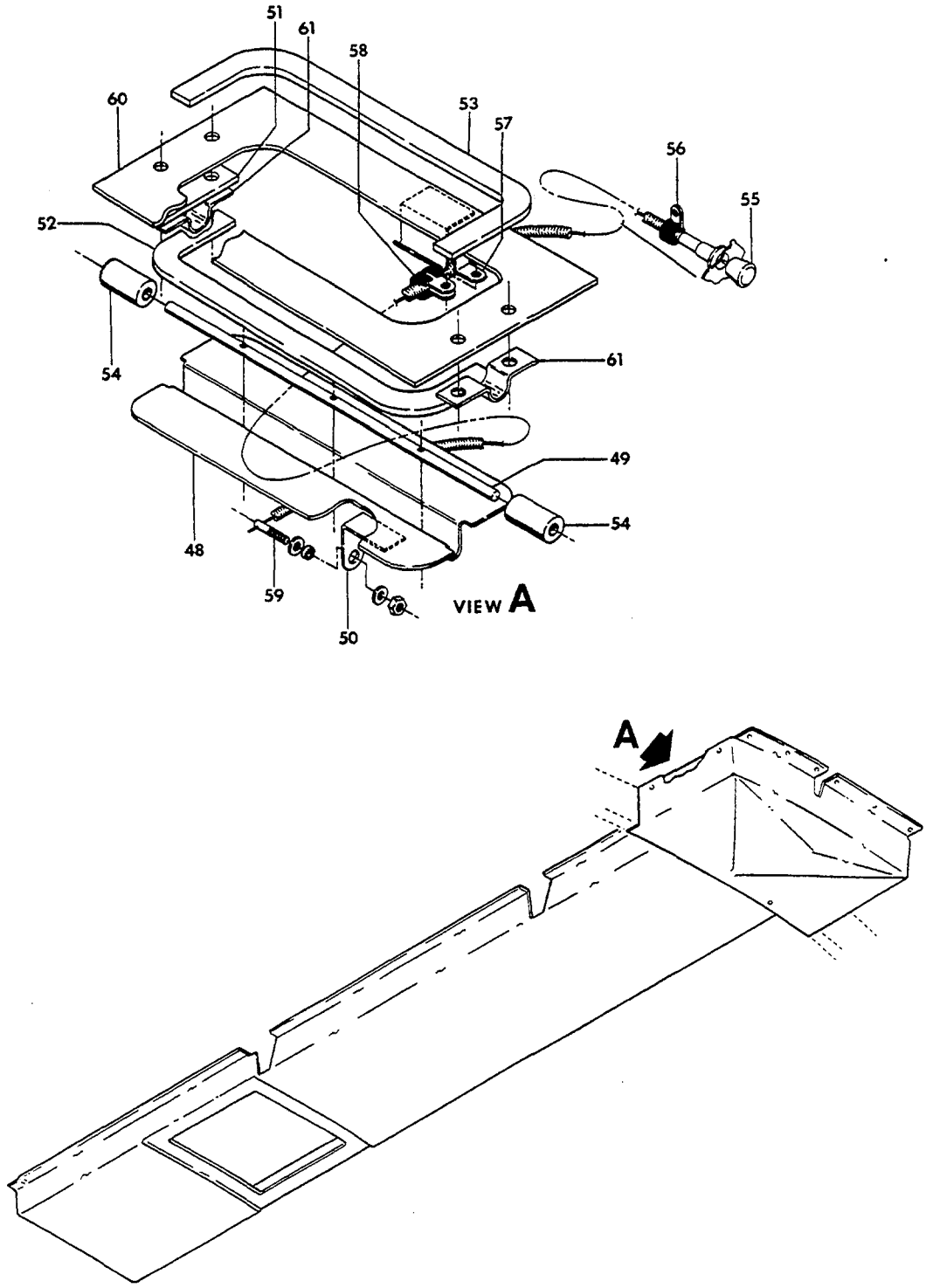

FIGURE 22-20.OVERHEAD PANEL AND DUCTS
/SHEET 4 OF 4 SHEETS/

ATA CODE & INDEX NO.	PART NO.	DESCRIPTION 1 2 3 4 5 6 7	UNITS PER ASSY	USABLE ON CODE
22-20	96-555013-33	DUCT INSTL,OVERHEAD AIR/SEE CHAPTER 21-22-50/ .	NP	13
	96-440015-603	DOOR ASSY,OVERHEAD AIR SHUT OFF	1	12
- 48	96-440015-23	. DOOR.	1	12
- 49	96-440015-17	. SHAFT	1	12
- 50	96-440015-37	. BRACKET	1	12
		/ATTACHING PARTS/		
	AN515-6R	. SCREW	3	
	MS20365-632	. NUT	3	
		——*——		
- 51	96-440015-21	SPACER.	1	12
- 52	96-440015-27	SEAL,LOWER.	1	12
- 53	96-440015-29	SEAL,UPPER.	1	12
- 54	96-440015-31	BEARING	2	12
- 55	35-380051-15	CONTROL,OVERHEAD FRESH AIR.	1	10
	95-380005-9	CONTROL,OVERHEAD FRESH AIR.	1	11
		/ATTACHING PARTS/		
- 56	AN742-3	CLAMP	AR	
	AN515-10R	SCREW	AR	
	MS20365-1032	NUT	AR	
		——*——		
- 57	AN743-13	BRACKET	1	12
- 58	AN742-3	CLAMP	1	12
		/ATTACHING PARTS/		
	AN515-10R	SCREW	1	
	MS20365-1032	NUT	1	
		——*——		
- 59	35-550520	PIN	1	12
	102933S4ZJ0093	SPACER.	1	12
	AN960-10	WASHER.	1	12
	MS20365-1032	NUT	1	12
- 60	96-440015-13	DOUBLER,OVERHEAD DOOR	1	12
- 61	96-440015-19	CLAMP	2	12
		/ATTACHING PARTS/		
	AN515-8R	SCREW	2	
	MS20365-832	NUT	2	
		——*——		

CODES OF EFFECTIVITY

1 TC-964 THRU TC-1042
TE-11 THRU TE-451
2 TC-1043 THRU TC-1402
TE-452 THRU TE-767
3 TC-964 THRU TC-1042
4 TC-1043 THRU TC-1402
5 TE-11 THRU TE-451
6 TE-452 THRU TE-767
7 TC-964 THRU TC-1402
TE-11 THRU TE-767
8 TC-964 THRU TC-1402
9 TE-11 THRU TE-767
10 TC-964 THRU TC-1091
TE-11 THRU TE-558
11 TC-1092 THRU TC-1402
TE-559 THRU TE-767
12 TC-964 THRU TC-1092
TE-11 THRU TE-559
13 TC-1093 THRU TC-1402
TE-560 THRU TE-767

"END"

21-22-30
OVERHEAD PANEL AND DUCTS
TE-768 THRU TE-846

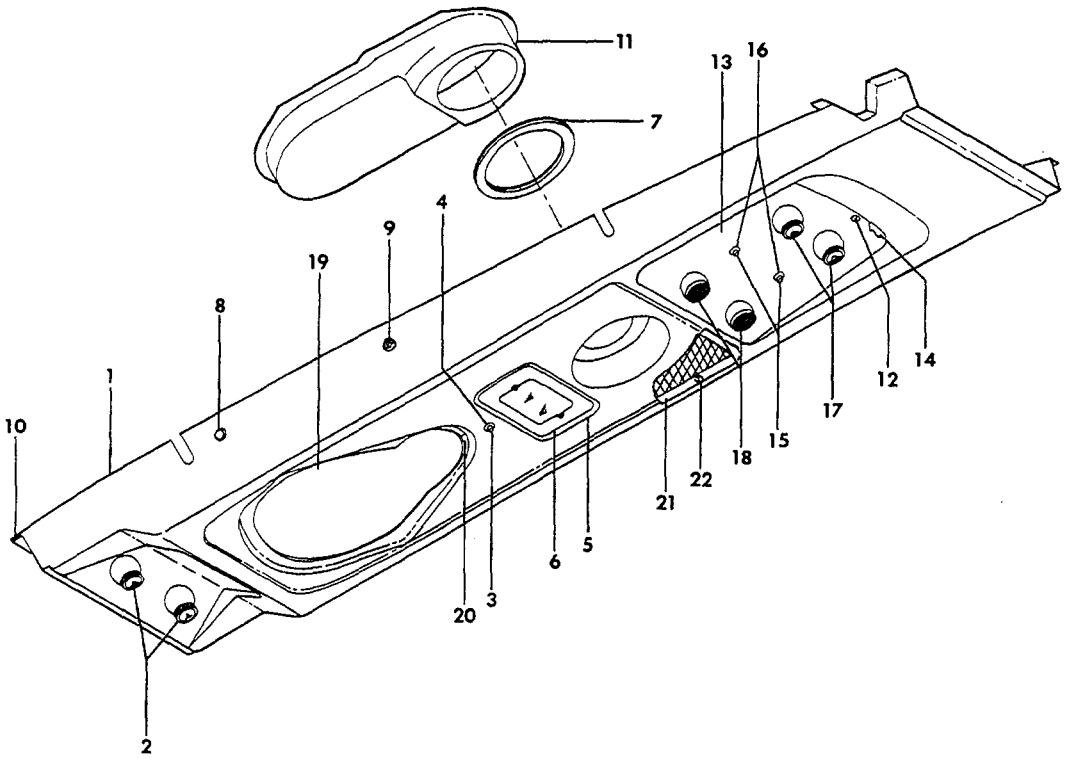

55-417-36

FIGURE 22-30.OVERHEAD PANEL AND DUCTS
/SHEET 1 OF 2 SHEETS/

ATA CODE & INDEX NO.	PART NO.	DESCRIPTION 1 2 3 4 5 6 7	UNITS PER ASSY	USABLE ON CODE
22-30	96-550016-1	PANEL INSTL,OVERHEAD/4 OUTLETS/	NP	1
	96-550016-5	PANEL INSTL,OVERHEAD/5 OUTLETS/	NP	1
	96-550016-9	PANEL INSTL,OVERHEAD/6 OUTLETS/	NP	1
	96-550013-641	. PANEL ASSY,FWD.	1	1
- 1	96-550013-147	. . SHELL	1	1
- 2	2373	. . VALVE,AIR	2	1
		/ATTACHING PARTS/		
	NAS384-6-8P	. . SCREW	4	
	NAS446-2-1	. . NUT	4	
		——*——		
- 3	L18366-1	. . SWITCH,DOME LIGHT	1	1
- 4	96-550013-51	. . GASKET,SWITCH	1	1
- 5	B3550-1	. . LIGHT ASSY,DOME	1	1
		/ATTACHING PARTS/		
	NAS387-632-8P	. . SCREW	4	
	NAS697A06	. . NUTPLATE.	4	
		——*——		
	303	. . BULB,DOME LIGHT	1	1
- 6	96-550013-53	. . GASKET,DOME LIGHT	1	1
- 7	96-550013-37	. . GASKET,EXHAUST VALVE.	1	1
- 8	51067	. . BUTTON,PLUG	1	1
- 9	MS35489-9	. . GROMMET/SUPERSEDES AN931-5-9/	1	1
	96-360005-603	. . WIRE ASSY,DOME LIGHT.	1	1
- 10	96-550013-39	. DOUBLER,SHELL	1	1
- 11	96-550013-35	. PAN,CABIN EXHAUST DUCT.	1	1
	96-550016-605	. PANEL ASSY/AIR OUTLET & READING LIGHT/.	1	1
		/ATTACHING PARTS/		
- 12	NAS387-632-8P	. SCREW	8	
		——*——		
- 13	96-550013-95	. . PAN	1	1
- 14	96-550013-83	. . GASKET,PAN.	1	1
- 15	L18366-1	. . SWITCH,READING LIGHT.	2	1
- 16	96-550013-51	. . GASKET.	2	1
- 17	2373	. . VALVE,AIR	2	1
		/ATTACHING PARTS/		
	NAS384-6-8P	. . SCREW	4	
	NAS446-2-1	. . NUT	4	
		——*——		
- 18	1870	. . LIGHT,READING	2	1
		/ATTACHING PARTS/		
	NAS384-6-8P	. . SCREW	4	
	NAS446-2-1	. . NUT	4	
		——*——		
	303	. . . BULB,READING LIGHT.	1	1
- 19	96-550013-49	. DOME,RADIO SPEAKER.	1	1
- 20	96-550013-33	. GASKET.	1	1
- 21	96-554011	. GRILL ASSY.	1	1
		/ATTACHING PARTS/		
- 22	NAS387-632-8P	. SCREW	8	
	MF1000-632	. NUTPLATE.	8	
		——*——		
	A46FC	SPEAKER/SUPERSEDES P5,40 OHM/	1	1
	MCO D54353-1	PLATE,SPEAKER MOUNT	1	1

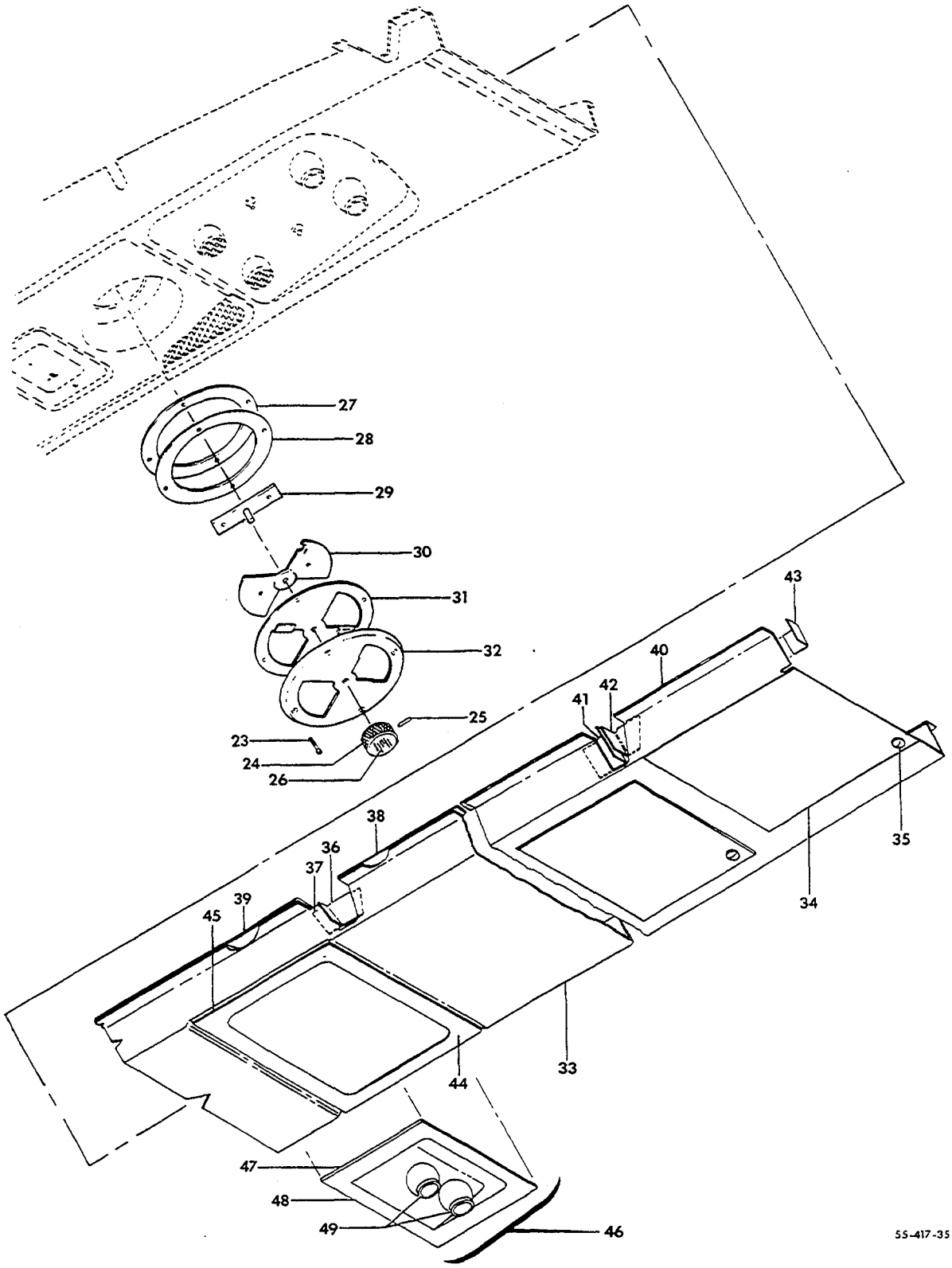

FIGURE 22-30. OVERHEAD PANEL AND DUCTS
/SHEET 2 OF 2 SHEETS/

ATA CODE & INDEX NO.	PART NO.	DESCRIPTION 1 2 3 4 5 6 7	UNITS PER ASSY	USABLE ON CODE
22-30	96-550015	VALVE ASSY,CABIN EXHAUST	1	1
		/ATTACHING PARTS/		
- 23	NAS387-832-8P	SCREW	4	
	MK2000-08	NUTPLATE	4	
- 24	96-550015-23	KNOB ASSY,VALVE CONTROL	1	1
		/ATTACHING PARTS/		
- 25	AN565D8H8	SCREW,SET	1	
- 26	96-554013	PLACARD,VALVE INSTRUCTIONS	1	1
	96-550015-601	VALVE ASSY,CABIN EXHAUST	1	1
- 27	96-550015-11	RING,BACKUP	1	1
- 28	35-410154-3	SEAL,VALVE	1	1
- 29	96-550015-3	SHAFT ASSY,VALVE CONTROL	1	1
- 30	96-550015-9	SHUTTER	1	1
- 31	35-410455-1	COVER	1	1
- 32	96-550015-13	PLATE	1	1
	96-550013-613	SHELL ASSY,AFT	1	1
- 33	96-550013-21	SHELL,AFT	1	1
- 34	96-550013-103	COVER	1	1
		/ATTACHING PARTS/		
- 35	NAS387-6	SCREW	12	
	NAS697AD6	NUTPLATE	12	
- 36	96-550013-61	CLIP,AFT LH	1	1
	96-550013-62	CLIP,AFT RH	1	1
- 37	96-550013-63	CLIP,FWD	2	1
- 38	96-550013-127	STRIP	2	1
- 39	96-550013-125	STRIP	2	1
- 40	96-550013-129	STRIP	2	1
- 41	96-550013-59	CLIP,FWD LH	1	1
	96-550013-60	CLIP,FWD RH	1	1
- 42	96-550013-57	CLIP,AFT LH	1	1
	96-550013-58	CLIP,AFT RH	1	1
- 43	96-550013-55	CLIP,AFT	2	1
- 44	96-550013-75	DOOR/NO OUTLETS/	1	1
	96-550013-85	DOOR/WITH OUTLETS/	1	1
- 45	96-550013-77	GASKET,DOOR	1	1
- 46	96-550013-615	PANEL ASSY/SINGLE OUTLET/	1	1
	96-550013-616	PANEL ASSY/DOUBLE OUTLET/	1	1
		/ATTACHING PARTS/		
	NAS384-6P	SCREW	11	
	NAS395-6-1	NUT	11	
- 47	96-550013-91	GASKET	1	1
- 48	96-550013-99	PAN/SINGLE OUTLET/	1	1
	96-550013-101	PAN/DOUBLE OUTLET/	1	1
- 49	2373	VALVE,AIR	2	1
		/ATTACHING PARTS/		
	NAS384-6-8P	SCREW	4	
	NAS446-2-1	NUT	4	

CODES OF EFFECTIVITY

1 TE-768 THRU TE-846

"END"

21-22-40
OVERHEAD PANEL AND DUCTS
TC-1403 THRU TC-1607
TE-847 THRU TE-942 EXCEPT TE-938

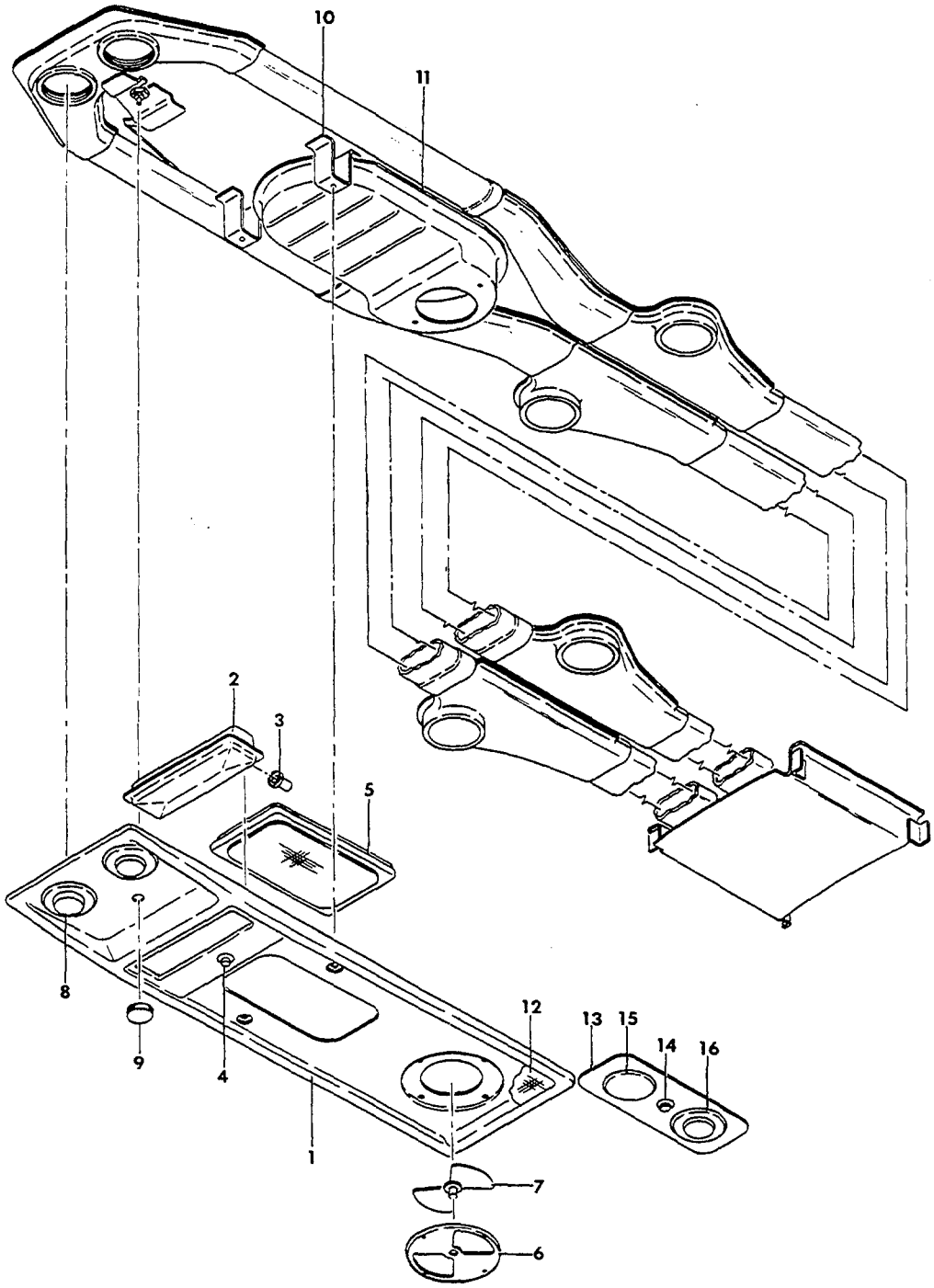

55-417-28

FIGURE 22-40.OVERHEAD PANEL AND DUCTS
/SHEET 1 OF 2 SHEETS/

ATA CODE & INDEX NO.	PART NO.	DESCRIPTION 1 2 3 4 5 6 7	UNITS PER ASSY	USABLE ON CODE
22-40	58-530096-1	CONSOLE INSTL,OVERHEAD.	NP	1
	58-530097-1	. CONSOLE ASSY,OVERHEAD	1	1
- 1	58-530098-1	. . ESCUTCHEON.	1	1
- 2	58-530106-7	. . BOX ASSY,LIGHT.	1	1
- 3	2506	. . SOCKET,LIGHT.	2	1
- 4	L18366-3	. . SWITCH,LIGHT.	1	1
- 5	P5	. . SPEAKER	1	1
		/ATTACHING PARTS/		
	MS24693S9	. . SCREW	4	
	100696DZL008	. . SPACER/SUPERSEDES 58-530111-1 GASKET/ . . .	4	
	MS20365-440	. . NUT	4	
		——*——		
- 6	96-550015-21	. . PLATE ASSY,CABIN EXHAUST.	1	1
	96-550015-15	. . SHIM.	1	1
- 7	96-550015-29	. . SHUTTER ASSY,CABIN EXHAUST.	1	1
		/ATTACHING PARTS/		
	NAS384-6-8P	. . SCREW	2	
	NAS446-2-1	. . NUT	2	
		——*——		
	58-530110-1	. KNOB ASSY,CABIN AIR EXHAUST	1	1
	100951NY025ZZ	. WASHER.	1	1
- 8	2515	. VALVE,AIR OUTLET.	2	1
- 9	58-530110-3	. KNOB ASSY	1	1
	100951NY025ZZ	. WASHER.	1	1
- 10	58-530105-1	. SUPPORT ASSY.	2	1
	AN515-8R8	. SCREW,CONSOLE ATTACHING	2	1
	AN960-8	. WASHER.	2	1
- 11	58-530109-1	. PLENUM ASSY,EXHAUST AIR	1	1
- 12	58-530101-1	. GRILL ASSY,SPEAKER & AIR EXHAUST.	1	1
	58-530103-1	FACEPLATE ASSY,LIGHT & AIR OUTLET	2	1
		/ATTACHING PARTS/		
	NAS389-8-10P	SCREW	2	
	130290-3	CLIPNUT	2	
		——*——		
- 13	58-530104-1	. FACEPLATE	1	1
- 14	J20125-03	. SWITCH,LIGHT.	1	1
	L18366-3	. SWITCH,LIGHT/ALTERNATE FOR J20125-03/	1	1
- 15	2565	. LIGHT ASSY/SUPERSEDES 2510/	1	1
- 16	2515	VALVE ASSY,AIR OUTLET	2	1

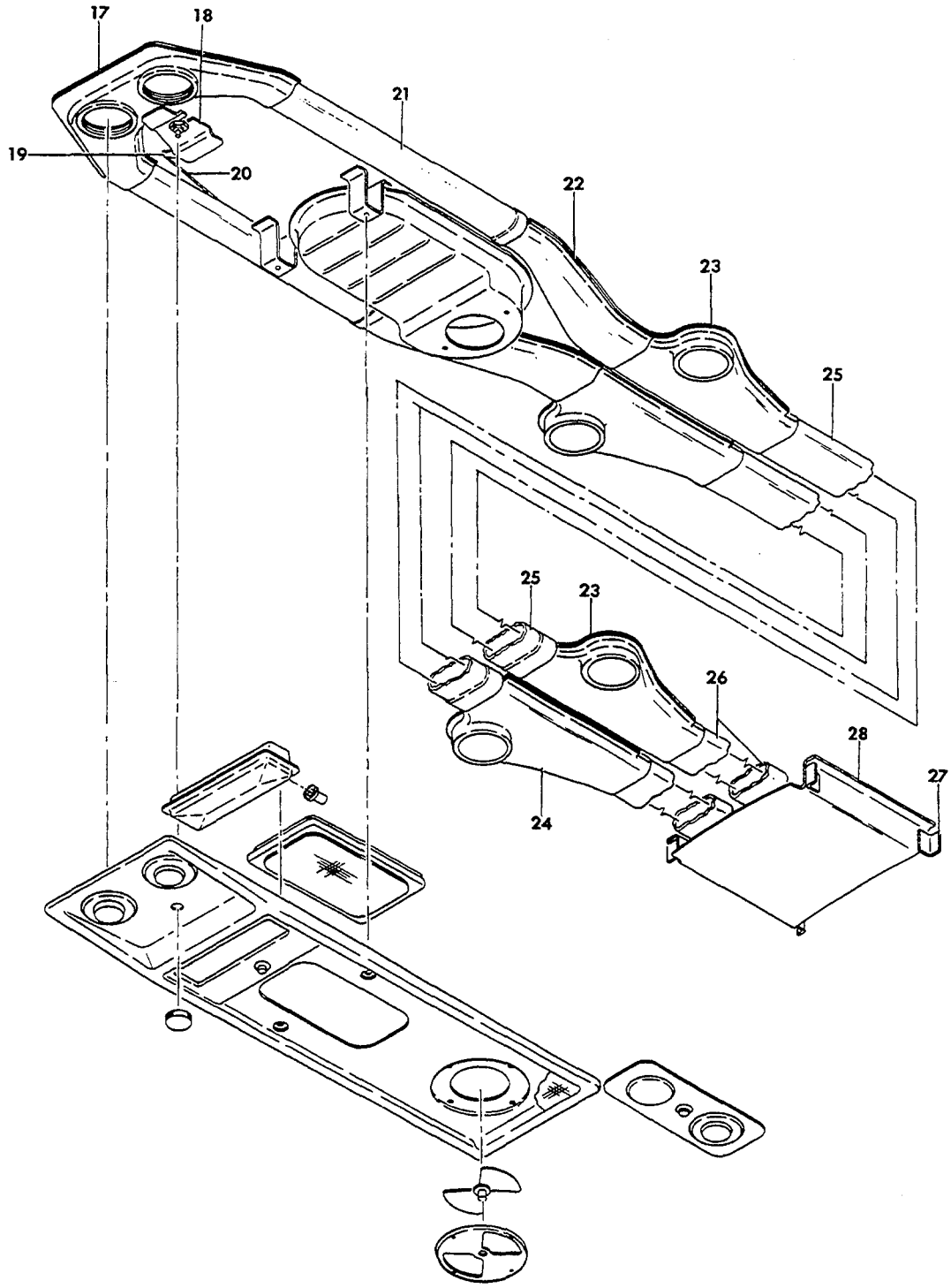

FIGURE 22-40.OVERHEAD PANEL AND DUCTS
/SHEET 2 OF 2 SHEETS/

ATA CODE & INDEX NO.	PART NO.	DESCRIPTION 1 2 3 4 5 6 7	UNITS PER ASSY	USABLE ON CODE
22-40	58-550011-5	DUCT INSTL,OVERHEAD FRESH AIR FWD	NP	1
- 17	58-530095-1	. ADAPTER ASSY,FWD AIR DUCT	1	1
- 18	58-530100-1	. BRACKET	1	1
		/ATTACHING PARTS/		
	AN526-832R6	. SCREW	2	
	AN526-1032R8	. SCREW	1	
	130290-2	. CLIPNUT	1	
		——*——		
- 19	361-000	. CONTROL ASSY.	1	1
		/ATTACHING PARTS/		
	AN526-1032R14	. SCREW	1	
	100696A-ZG011	. SPACER.	1	
	MS20365-1032	. NUT	1	
		——*——		
- 20	130-032-330	. CABLE ASSY,CONTROL.	1	1
	MS35490-5	. GROMMET	2	1
- 21	130907C-AC182	. DUCT,FWD.	2	1
- 22	58-550013-1	. DUCT ASSY	2	1
- 23	58-550012-9	. ADAPTER ASSY,LH	2	1
- 24	58-550012-10	. ADAPTER ASSY,RH	2	1
- 25	58-550016-3	. DUCT.	2	1
- 26	130907T-C-AB84	. DUCT,AFT.	2	1
- 27	58-550011-9	. CLIP.	4	1
- 28	58-550014-3	. PLENUM.	1	1
	58-550011-19	. SPACER.	2	1
	58-550011-21	. SPACER.	2	1
	TY23M	. STRAP,TIEDOWN	2	1
	49296	. CLAMP	3	1

CODES OF EFFECTIVITY

1 TC-1403 THRU TC-1607
TE-847 THRU TE-942
EXCEPT TE-938

"END"

21-22-50
DUCT INSTL,OVERHEAD AIR
TC-1093 THRU TC-1607
TE-560 THRU TE-942 EXCEPT TE-938

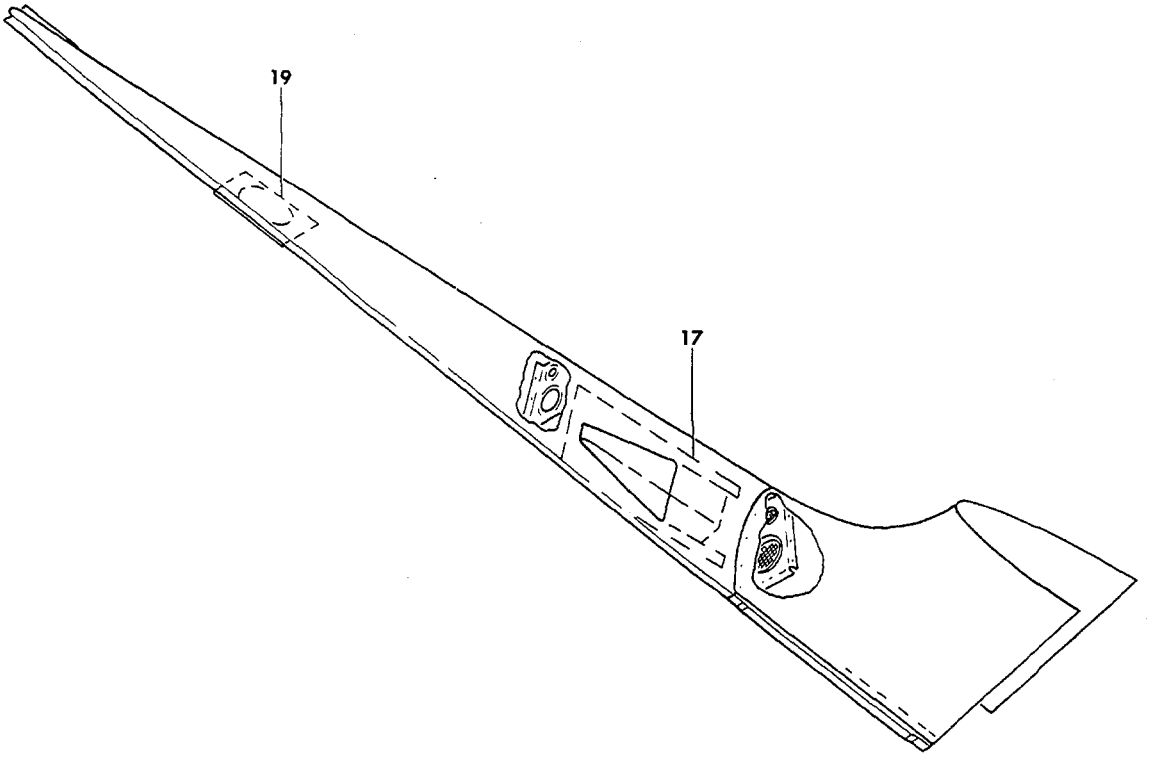

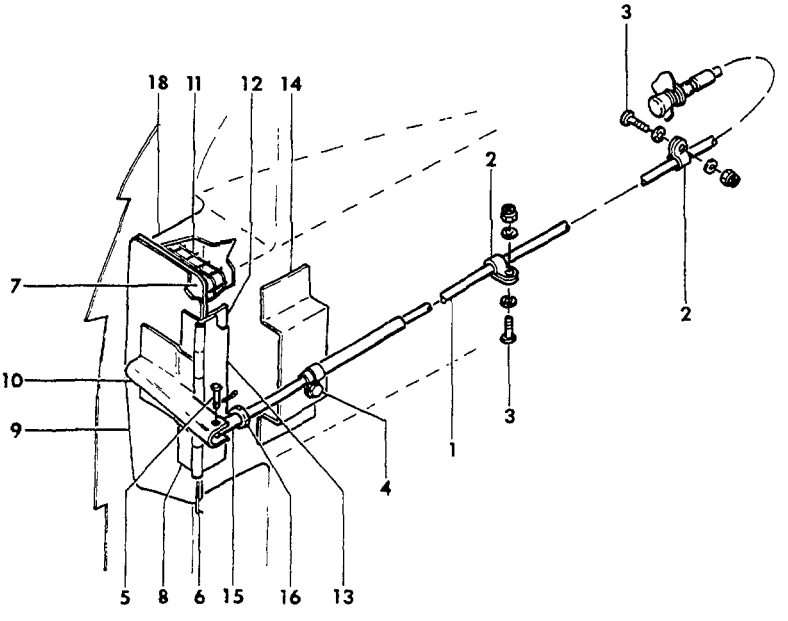

55-417-30

FIGURE 22-50.DUCT INSTL,OVERHEAD AIR

ATA CODE & INDEX NO.	PART NO.	DESCRIPTION 1 2 3 4 5 6 7	UNITS PER ASSY	USABLE ON CODE
22-50	96-555013-33	DUCT INSTL,OVERHEAD AIR	NP	1
- 1	95-380005-9	. CABLE ASSY.	1	2
	130-032-330	. CABLE ASSY.	1	3
		/ATTACHING PARTS/		
	49296	. CLAMP	4	
- 2	MS21919D65	. CLAMP	2	
- 3	AN515-10R	. SCREW	2	
	AN960-10	. WASHER	2	
	MS20365-1032	. NUT	2	
- 4	AN3-4A/M/	. BOLT.	1	
	AN960-10L	. WASHER.	3	
	MS21919D63	. CLAMP	1	
	100696D-ZC003	. SPACER.	1	
	AN366-1032	. NUTPLATE.	1	
		——*——		
	96-555013-3	. DOOR ASSY	1	1
		/ATTACHING PARTS/		
- 5	MS20392-1C13	. PIN	1	
	MS24665-132	. PIN,COTTER.	1	
- 6	96-555013-21	. PIN,HINGE	1	
		——*——		
- 7	96-555013-9	. . PAD	1	1
- 8	96-555013-19	. . HINGE,HALF.	1	1
- 9	96-555013-23	. . DOOR.	1	1
- 10	96-555013-25	. . ARM	1	1
- 11	96-555013-31	. SCREEN.	1	1
- 12	96-555013-29	. SPACER.	1	1
- 13	96-555013-17	. HINGE,HALF.	1	1
- 14	96-555013-35	. BRACKET	1	1
- 15	96-555013-37	. LINK.	1	1
- 16	AN345-10	. NUT	1	1
- 17	96-440015-9	PAN,DUCT.	1	1
- 18	50-554242-3	DUCT.	1	1
- 19	96-440015-13	DOUBLER	1	1

CODES OF EFFECTIVITY

1 TC-1093 THRU TC-1607 2 TC-1093 THRU TC-1402
TE-560 THRU TE-942 TE-560 THRU TE-846
EXCEPT TE-938
3 TC-1403 THRU TC-1607
TE-847 THRU TE-942
EXCEPT TE-938

"END"

21-40-01
CABIN HEATER

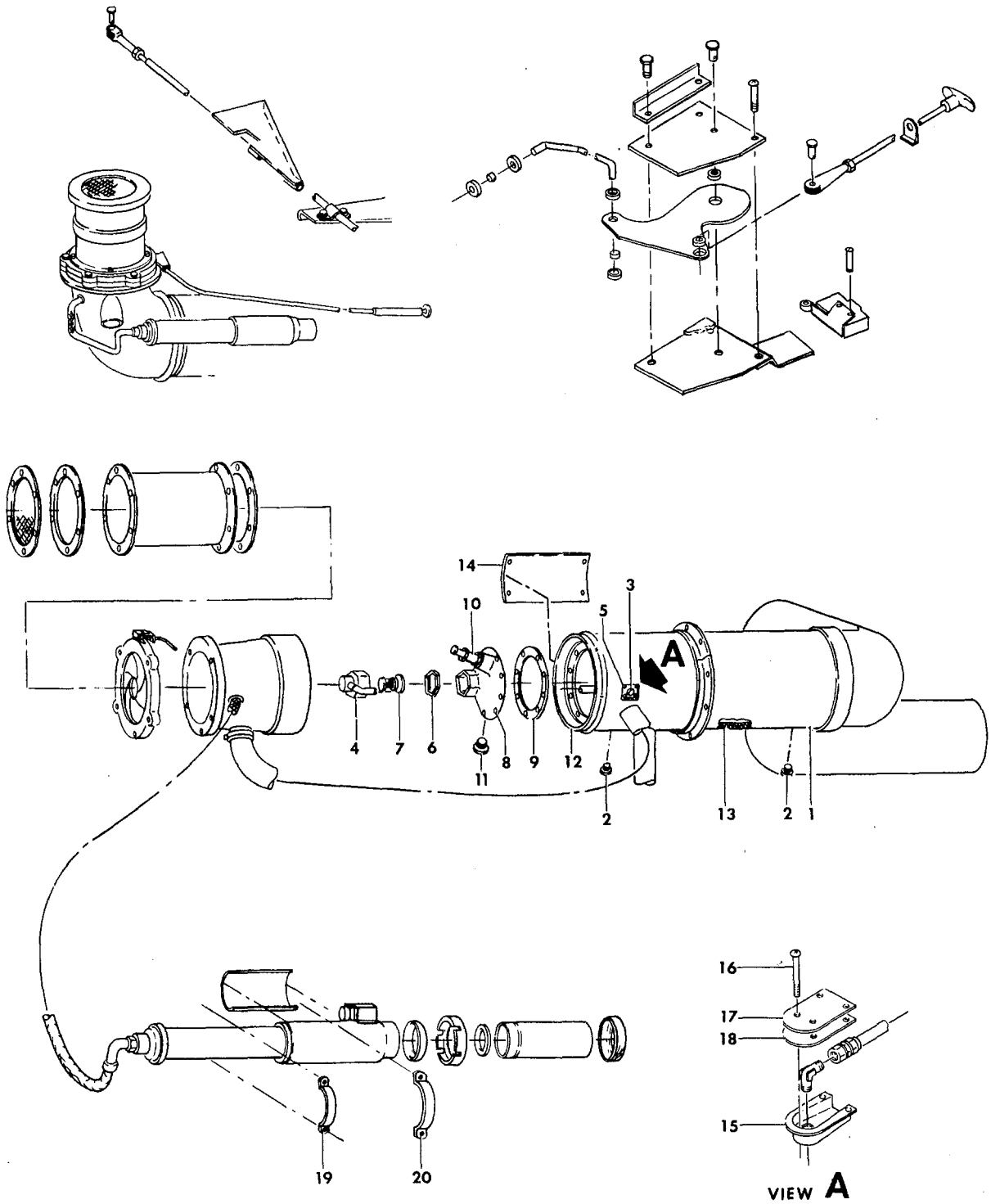

FIGURE 40-01.CABIN HEATER
/SHEET 1 OF 4 SHEETS/

ATA CODE & INDEX NO.	PART NO.	DESCRIPTION 1 2 3 4 5 6 7	UNITS PER ASSY	USABLE ON CODE
40-01	95-550001-1	HEAT AND VENT INSTL	NP	1
	95-550001-19	HEAT AND VENT INSTL	NP	2
	95-550001-23	HEAT AND VENT INSTL	NP	3
	95-550002-1	HEAT AND VENT INSTL	NP	4
	95-550002-195	HEAT AND VENT INSTL	NP	5
	95-550002-221	HEAT AND VENT INSTL	NP	6
	95-550002-199	HEAT AND VENT INSTL	NP	7
	95-550002-219	HEAT AND VENT INSTL	NP	8
	95-554024	. HEATER ASSY,CABIN/SEE JANITROL MANUAL 30C57 . FURNISHED WITH LOOSE TOOLS & ACCESSORIES/ /ATTACHING PARTS/	1	9
	105798-12	. CLAMP/SUPERSEDES 105798-7	1	10
	105798-23.25	. CLAMP	1	11
	D83A28	. . HEATER.	1	9
- 1	C85A82	. . . JACKET ASSY /ATTACHING PARTS/	1	9
	AN500A8-10	. . . SCREW	3	
	MS20365-832C	. . . NUT	3	
- 2	AN913-25	. . . PLUG.	2	9
- 3	32C93	. . . PLUG.	1	9
- 4	07C56	. . . NOZZLE HOLDER & FEED ASSY,FUEL & AIR. /ATTACHING PARTS/	1	9
	V40A76	. . . SCREW	2	
	AN501A10-8	. . . SCREW	2	
	AN935-10	. . . WASHER.	2	
- 5	87A37	. . . GASKET,FUEL FITTING	2	
- 6	51A66	. . . GASKET,NOZZLE HOLDER.	1	
- 7	G36A47	. . . NOZZLE,SPRAY.	1	9
- 8	51A45	. . . HEAD,COMBUSTION /ATTACHING PARTS/	1	9
	AN500A8-8	. . . SCREW	8	
	45A28	. . . WASHER.	8	
- 9	52A02	. . . GASKET.	1	
- 10	54A35	. . . PLUG,SPARK.	1	9
- 11	51A05	. . . ELECTRODE,GROUND.	1	9
	56A14	. . . WASHER,GROUND ELECTRODE	1	9
- 12	45C40	. . . COMBUSTION CHAMBER & RADIATOR ASSY.	1	9
- 13	A35A71	. . . GASKET ASSY,ROPE.	1	9
- 14	ED99A30	. . . PLATE,RATING.	1	9
- 15	50-555018	. . SHROUD ASSY,HEATER FUEL INLET	1	9
	50-555019	. . COVER ASSY,HEATER FUEL INLET. /ATTACHING PARTS/	1	9
- 16	AN520-10R22	. . SCREW	2	
- 17	50-555019-2	. . . COVER	1	9
- 18	50-555019-4	. . . GASKET.	2	9
	11C30	. IGNITION ASSY,HEATER. /ATTACHING PARTS/	1	9
- 19	414-183950-123	. CLAMP	1	
- 20	414-183950-125	. CLAMP	1	
	414-183950-135	. SPACER.	2	
	95-550002-45	. SPACER,AFT.	2	
	AN520-10	. SCREW	4	
	AN960-10	. WASHER.	4	
	MS20365-1032	. NUT	4	

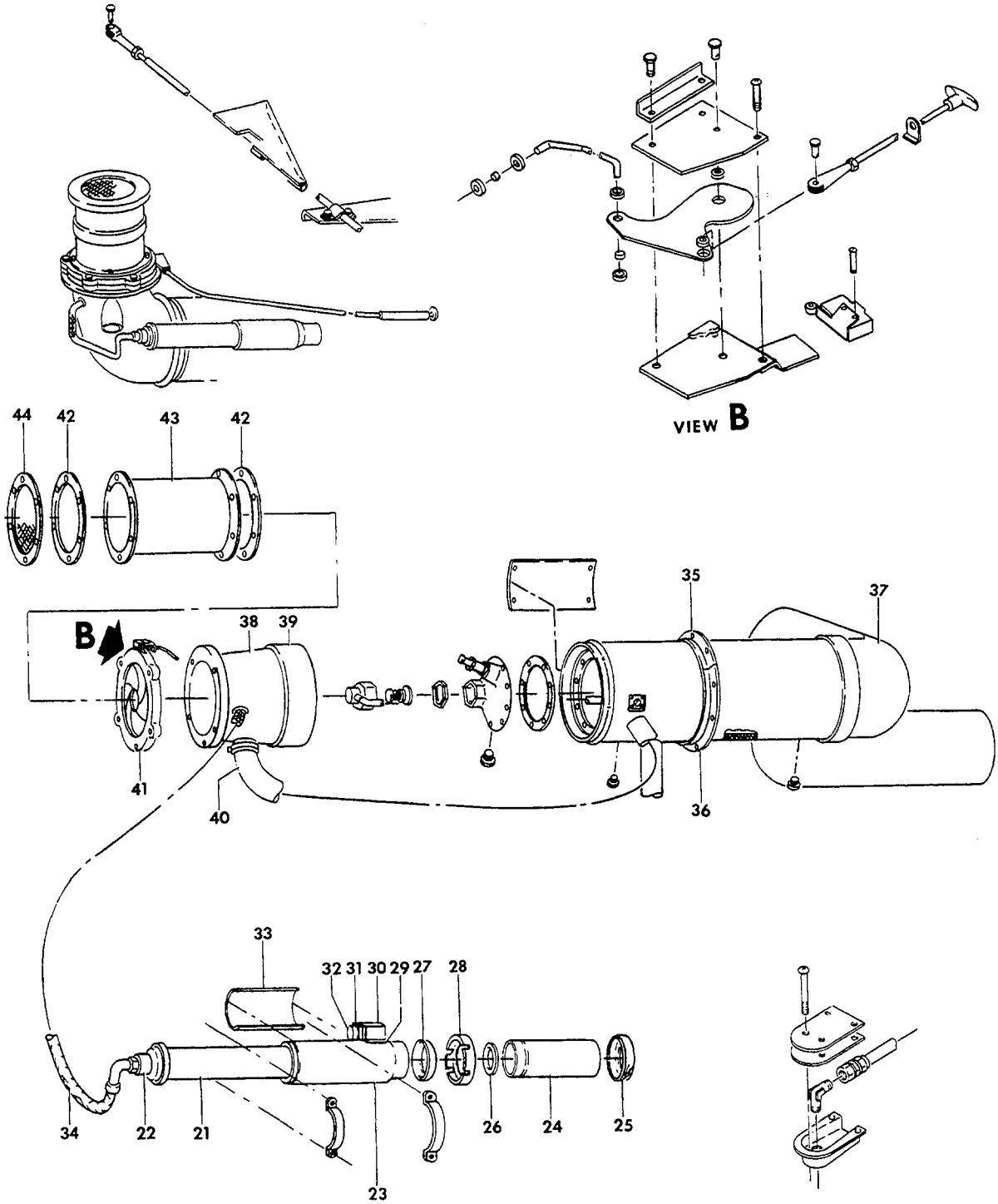

FIGURE 40-01.CABIN HEATER
/SHEET 2 OF 4 SHEETS/

ATA CODE & INDEX NO.	PART NO.	DESCRIPTION 1 2 3 4 5 6 7	UNITS PER ASSY	USABLE ON CODE
40-01 - 21	14C14	. . COIL ASSY,IGNITION.	1	9
- 22	C32C94	. . CAP,CLOSURE	1	9
- 23	14C09	. . BODY ASSY,IGNITION.	1	9
- 24	12C60	. . VIBRATOR.	1	9
- 25	14C17	. . RING,VIBRATOR RETAINING	1	9
- 26	14C23	. . SHIELD,RADIO NOISE.	1	9
- 27	A14C23	. . SHIELD,RADIO NOISE.	1	9
- 28	14C18	. . COLLAR,VIBRATOR SUPPORT	1	9
		/ATTACHING PARTS/		
	AN500A6-6	. . SCREW	6	
		——+——		
- 29	14C20	. . GASKET,RECEPTACLE ADAPTER	1	9
- 30	14C16	. . ADAPTER,RECEPTACLE.	1	9
		/ATTACHING PARTS/		
	AN500A6-20	. . SCREW	4	
		——+——		
- 31	14C19	. . GASKET,RECEPTACLE	1	9
- 32	MS3102E1CSL3P	. . CONNECTOR,RECEPTACLE.	1	9
		/ATTACHING PARTS/		
	AN500A4-6	. . SCREW	4	
		——+——		
- 33	23C62	. . PLATE,IDENTIFICATION.	1	9
- 34	B41C74	. LEAD ASSY,IGNITOR	1	12
	J41C74	. LEAD ASSY,IGNITOR	1	13
	5AJ41-474L	. LEAD ASSY,IGNITOR/ALTERNATE FOR J41C74/ . . .	1	13
- 35	95-554025-1	. SUPPORT,HEATER.	1	9
- 36	95-554025-3	. SUPPORT,HEATER.	1	9
		/ATTACHING PARTS/		
	AN3-4A/M/	. BOLT.	4	
	95-554026	. GASKET.	1	
	AN960-10	. WASHER.	4	
	AN366F1032	. NUTPLATE.	4	
		——+——		
- 37	95-554038-9	. PLENUM ASSY,HEATER AFT.	1	9
	95-554021	. PLENUM ASSY,HEATER FWD.	1	14
	95-554021-3	. PLENUM ASSY,HEATER FWD.	1	15
- 38	95-550015-3	. PLENUM ASSY,HEATER FWD.	1	13
		/ATTACHING PARTS/		
	AN3-10A/M/	. BOLT.	4	
	AN960-10	. WASHER.	4	
	MS20365-1032	. NUT/SUPERSEDES AN365-1032/.	4	
		——+——		
- 39	40A50	. CLAMP/PLENUM TO HEATER/	2	9
- 40	111716AX3XX42	. DUCT.	1	9
		/ATTACHING PARTS/		
	105798-6	. CLAMP	2	
		——+——		
	1V40-550	. VALVE ASSY,IRIS	1	12
- 41	95-550002-17	. VALVE ASSY,IRIS	1	13
- 42	414-183963-9	. GASKET,BLOWER	2	9
- 43	96-380023	. BLOWER ASSY,FWD CIRCULATING	1	9
- 44	50-554106	. SCREEN,BLOWER INTAKE.	1	9

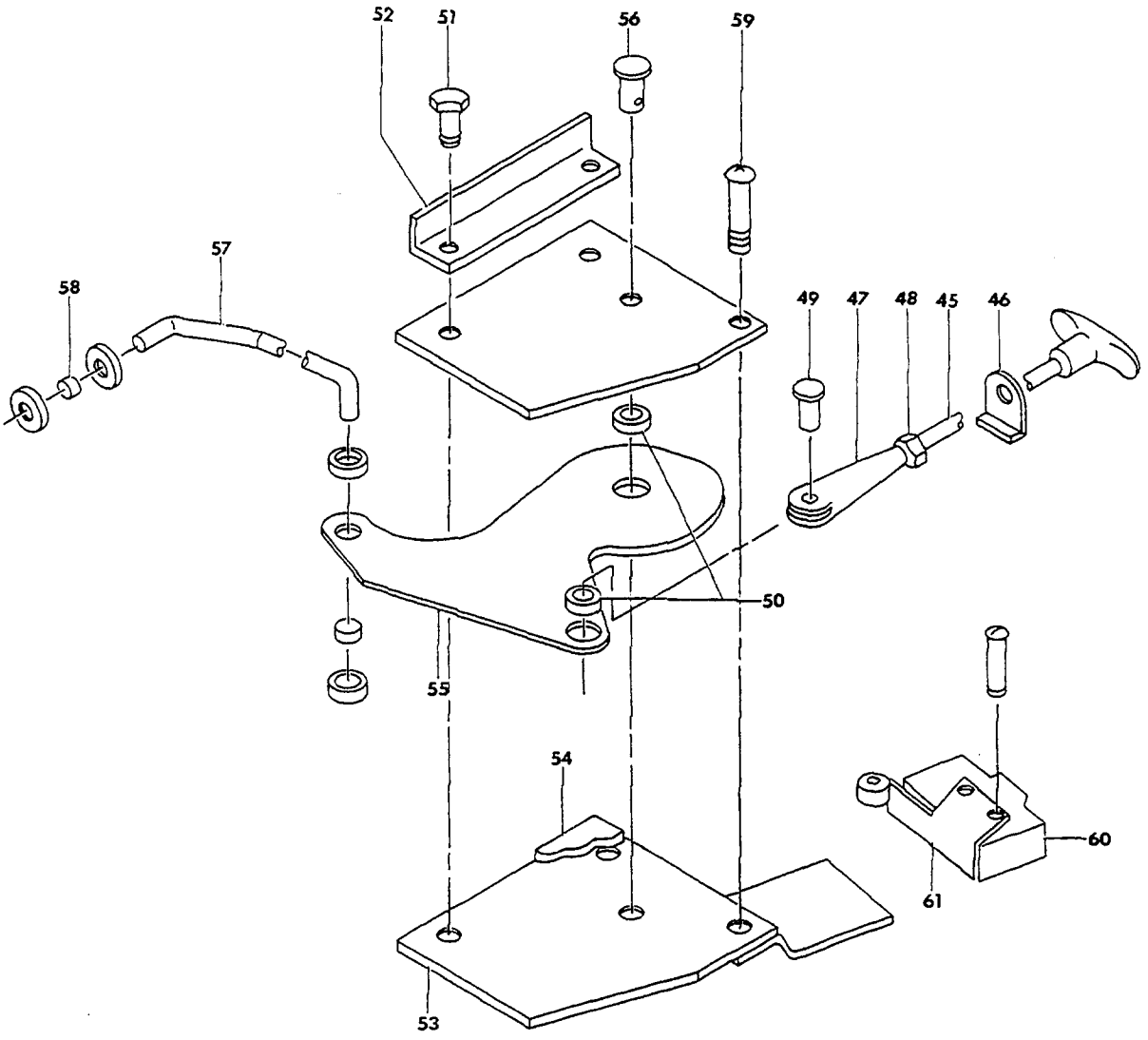

VIEW **B**

55-412-23

FIGURE 40-01.CABIN HEATER
/SHEET 3 OF 4 SHEETS/

ATA CODE & INDEX NO.	PART NO.	DESCRIPTION 1 2 3 4 5 6 7	UNITS PER ASSY	USABLE ON CODE
40-01	95-550000-41	CONTROL,HEATER IRIS VALVE	1	12
	95-550002-33	CONTROL,HEATER IRIS VALVE	1	16
	95-550002-203	CONTROL,HEATER IRIS VALVE	1	17
- 45	95-550002-229	CONTROL,HEATER IRIS VALVE	1	11
	RA1039C	BRACKET	1	10
- 46	95-550000-37	BRACKET,CONTROL SUPPORT	1	11
		/ATTACHING PARTS/		
	AN520-8R	SCREW	2	
	AN960-8	WASHER	2	
	22NA17A	NUTPLATE	2	
	MS35489-11	GROMMET/SUPERSEDES AN931-6-10/	1	9
	AN931-5-9	GROMMET	2	9
	95-550000-17	CLEVIS	1	12
- 47	AN665-21R	CLEVIS	1	13
	AN345-10	NUT,CLEVIS LOCK	1	12
- 48	AN315-3	NUT,CLEVIS LOCK	1	13
	AN393-19	PIN,CLEVIS	1	12
- 49	MS20392-20	PIN,CLEVIS	1	13
	MS24665-130	PIN,COTTER	1	9
- 50	95-550002-23	BUSHING,BELLCRANK	2	13
	95-550002-25	PLATE ASSY	1	13
		/ATTACHING PARTS/		
- 51	AN3	BOLT	2	
	AN960-10	WASHER	4	
	AN960-10L	WASHER	2	
	H10-1032	NUT	2	
- 52	95-550002-27	. PLATE	2	13
- 53	95-550002-19	. BRACKET	2	13
- 54	95-550002-21	GUIDE/PHENOLIC/	2	13
- 55	95-550002-31	BELLCRANK,IRIS VALVE CONTROL	1	13
		/ATTACHING PARTS/		
- 56	MS20392-20	PIN,CLEVIS	1	
	AN960-10	WASHER	3	
	MS24665-130	PIN,COTTER	1	
- 57	95-550002-29	LINK,CONTROL	1	13
		/ATTACHING PARTS/		
	AN960-10	WASHER	4	
	AN960-10L	WASHER	AR	
- 58	95-550002-23	BUSHING	2	
	MS24665-130	PIN,COTTER	2	
- 59	NAS221	SCREW	1	13
	AN970-3	WASHER	2	13
	AN960-10	WASHER	3	13
	NAS43D03	SPACER	1	13
	H10-1032	NUT	1	13
- 60	MS25026-1	SWITCH,LIMIT	1	9
- 61	AN3169-1	ACTUATOR,LIMIT SWITCH	1	9
		/ATTACHING PARTS/		
	AN515-6-18	SCREW	2	

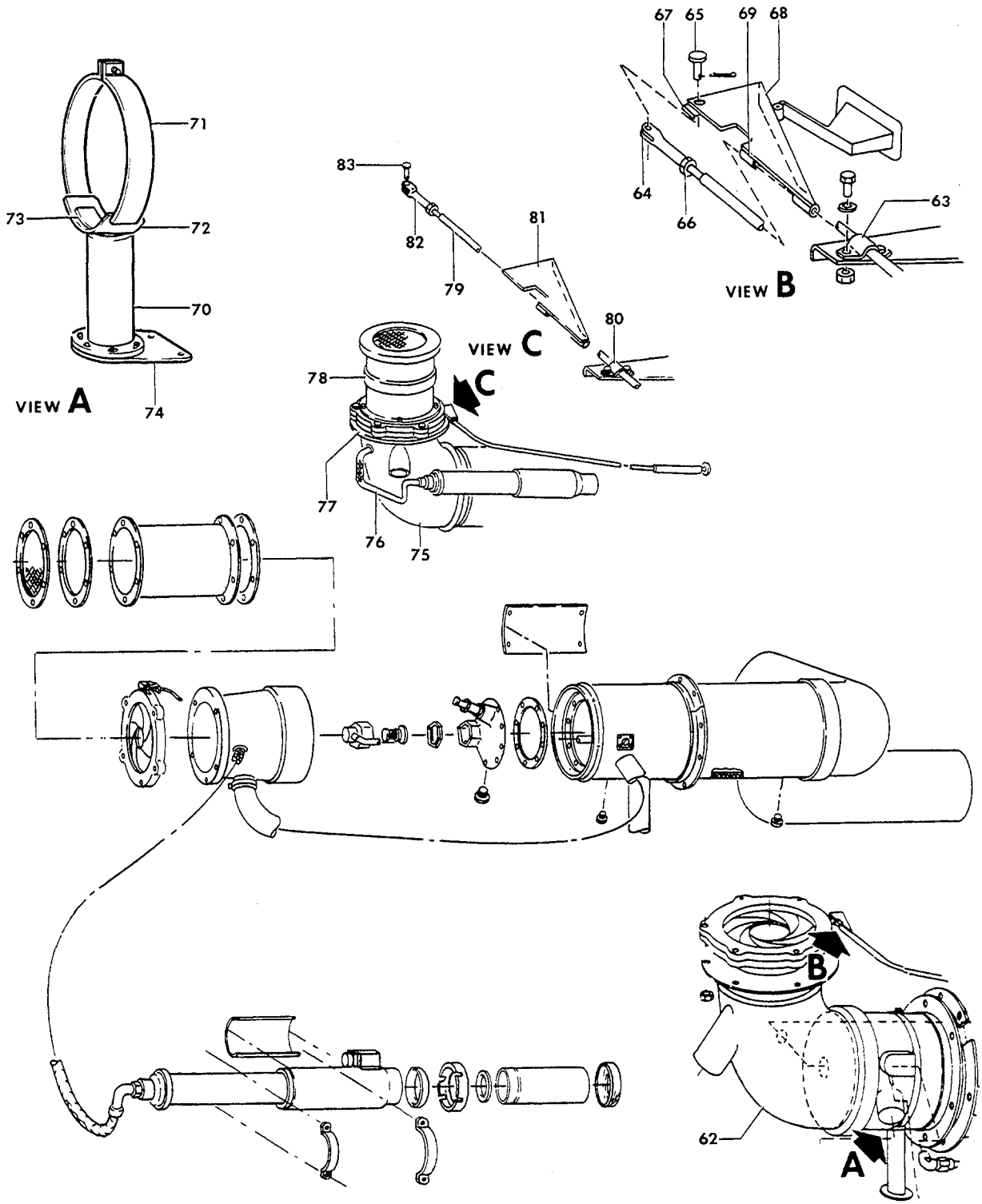

55-412-24

FIGURE 40-01.CABIN HEATER
/SHEET 4 OF 4 SHEETS/

ATA CODE & INDEX NO.	PART NO.	DESCRIPTION 1 2 3 4 5 6 7	UNITS PER ASSY	USABLE ON CODE
40-01	95-554021	PLENUM ASSY,HEATER FWD.	1	14
- 62	95-554021-3	PLENUM ASSY,HEATER FWD.	1	15
- 63	105019	CLAMP ASSY,CONTROL.	1	12
		/ATTACHING PARTS/		
	AN3-11A	BOLT.	2	
	AN960-10	WASHER.	2	
	MS20365-1032	NUT	2	
		——*——		
- 64	95-550000-17	CLEVIS.	1	12
		/ATTACHING PARTS/		
- 65	AN393-19	PIN	1	
	AN960-10	WASHER.	1	
	AN380-2-2	PIN,COTTER.	1	
- 66	AN345-10	NUT	1	
		——*——		
- 67	95-550000-13	BRACKET	1	12
	95-554028	CAM ASSY,HEATER SWITCH CONTROL.	1	12
- 68	95-554028-7	. CAM	1	12
- 69	95-554028-5	. BUSHING	1	12
	95-554014-13	SHROUD ASSY,HEATER EXHAUST.	1	12
	95-554014-601	SHROUD ASSY,HEATER EXHAUST.	1	13
	95-554014-7	. WELD ASSY	1	12
- 70	95-554014-23	. WELD ASSY	1	13
- 71	95-554014-9	. CLAMP	1	9
- 72	95-554014-11	. GUSSET.	2	9
- 73	95-554015	. GUSSET.	1	9
- 74	95-554014-15	SHIELD,HEATER EXHAUST	1	9
	96-410000-29	STRUCTURE INSTL,WEATHER RADAR NOSE.	NP	11
- 75	96-550012	PLENUM ASSY,HEATER FWD.	1	11
- 76	B41C74	LEAD ASSY,IGNITOR	1	11
- 77	1V40-550	VALVE ASSY,IRIS	1	11
- 78	105798-24	CLAMP	1	11
- 79	96-410000-33	CONTROL,IRIS VALVE.	1	11
	MS35489-6S	GROMMET	4	11
- 80	105019	CLAMP ASSY,IRIS CONTROL CABLE	1	11
		/ATTACHING PARTS/		
	AN3-11A/M/	BOLT.	2	
	AN960-10	WASHER.	2	
	MS20365-1032	NUT	2	
		——*——		
- 81	95-554028	CAM,HEATER SWITCH ACTUATOR.	1	11
- 82	95-550000-17	CLEVIS,IRIS VALVE CONTROL	1	11
	AN345-10	NUT,CLEVIS CHECK.	1	11
- 83	AN393-15	PIN,CONTROL CLEVIS.	1	11
	AN960-10	WASHER.	1	11
	MS24665-132	PIN,COTTER.	1	11

CODES OF EFFECTIVITY

1	TC-1 THRU TC-190	2	TC-191 THRU TC-260
3	TC-261 THRU TC-501	4	TC-502 THRU TC-954
5	TC-955 THRU TC-1042	6	TC-1043 THRU TC-1607
7	TE-1 THRU TE-451	8	TE-452 THRU TE-942 EXCEPT TE-938
9	TC-1 THRU TC-1607 TE-1 THRU TE-942 EXCEPT TE-938	10	TC-1 THRU TC-1607 TE-1 THRU TE-767
11	TE-768 THRU TE-942 EXCEPT TE-938	12	TC-1 THRU TC-501
13	TC-502 THRU TC-1607 TE-1 THRU TE-942 EXCEPT TE-938	14	TC-1 THRU TC-260
15	TC-261 THRU TC-501	16	TC-502 THRU TC-1607
17	TE-1 THRU TE-767		

"END"

21-40-20
HEATER FUEL PLUMBING

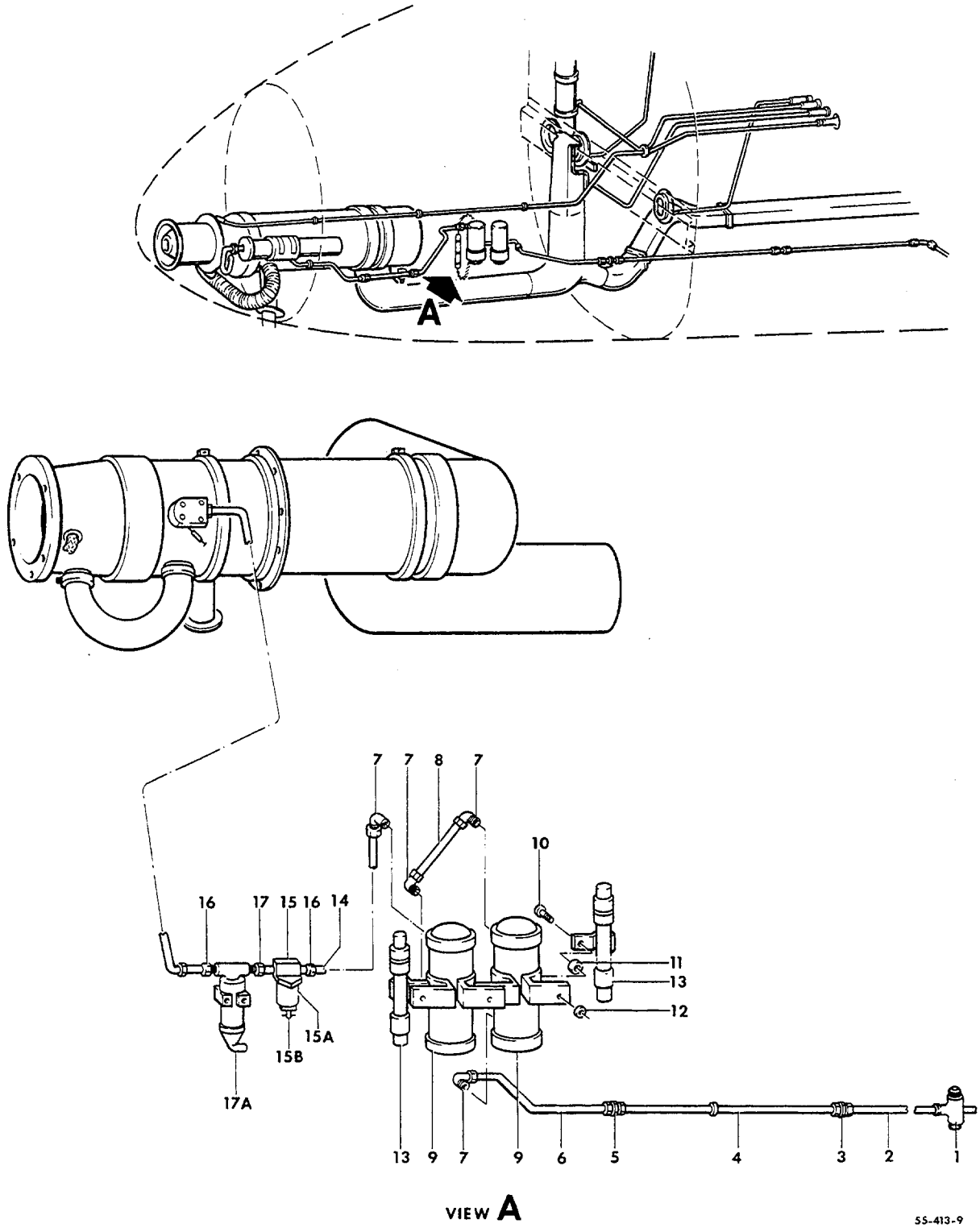

FIGURE 40-20.HEATER FUEL PLUMBING
/SHEET 1 OF 2 SHEETS/

ATA CODE & INDEX NO.	PART NO.	DESCRIPTION 1 2 3 4 5 6 7	UNITS PER ASSY	USABLE ON CODE
40-20	95-550000	HEAT & VENT INSTL,CABIN	NP	1
	95-550001-1	HEAT & VENT INSTL,CABIN	NP	2
	95-550001-19	HEAT & VENT INSTL,CABIN	NP	3
	95-550001-23	HEAT & VENT INSTL,CABIN	NP	4
	95-550002-1	HEAT & VENT INSTL,CABIN	NP	5
	95-550002-221	HEAT & VENT INSTL,CABIN	NP	6
	95-550002-199	HEAT & VENT INSTL,CABIN	NP	7
	95-550002-219	HEAT & VENT INSTL,CABIN	NP	8
- 1	AN783-6D	TEE,HTR FUEL SUPPLY/F.S. 80.50,W.L. 82.00/	1	
- 2	95-550000-57	TUBE ASSY,HTR FUEL SUPPLY	1	
- 3	AN815-4	UNION	1	
- 4	95-550000-21	TUBE ASSY,HTR FUEL SUPPLY	1	
	MS35489-8	GROMMET	2	
- 5	AN832-4D	UNION,BULKHEAD/F.S. 49.00,W.L. 82.00/	1	
		/ATTACHING PARTS/		
	AN960-716	WASHER	3	
	AN924-4	NUT	1	
		——*——		
- 6	95-550000-23	TUBE ASSY,HTR FUEL SUPPLY	1	9
	95-550002-201	TUBE ASSY,HTR FUEL SUPPLY	1	10
	MS35489-7	GROMMET	1	
- 7	AN822-4	ELBOW,FUEL PUMP	4	
- 8	95-550000-45	TUBE ASSY,HTR FUEL PUMP	1	
- 9	476284	PUMP,HTR FUEL/SEE CHAPTER 21-40-40/	2	
		/ATTACHING PARTS/		
- 10	AN520-10R	SCREW	3	
	AN960-10	WASHER	3	
- 11	102933D4ZM0312	SPACER	2	
	AN396A10	WASHER	6	
	AN345-10	NUT	3	
- 12	MS20365-1032	NUT	3	
		——*——		
- 13	7760598	CONNECTOR,ELEC/HTR FUEL PUMP/	2	
- 14	95-550000-43	TUBE ASSY,HTR FUEL PUMP & FUEL FILTER	1	11
	414-183976-15	FILTER ASSY,HTR FUEL	1	11
- 15	414-183976-17	. CAP	1	11
	414-183976-9	. GASKET	1	11
	F2X2T3	. FILTER	1	11
- 15A	414-183976-11	. BOWL	1	11
- 15B	CCA4850	. DRAIN,FUEL FILTER	1	11
	95-550002-233	TUBE ASSY,HTR FUEL PUMP & SHUT OFF VALVE	1	12
		SPR REPL FOR 95-550000-43 TUBE ASSY WITH REMOVAL OF THE 414-183976-15 FILTER ASSY.		
- 16	AN816-4	NIPPLE	2	
- 17	AN911-1	NIPPLE,FUEL FILTER ASSY	1	11
- 17A	MS25171-2S	NIPPLE,ELEC COVER/SHUT OFF VALVE/	1	

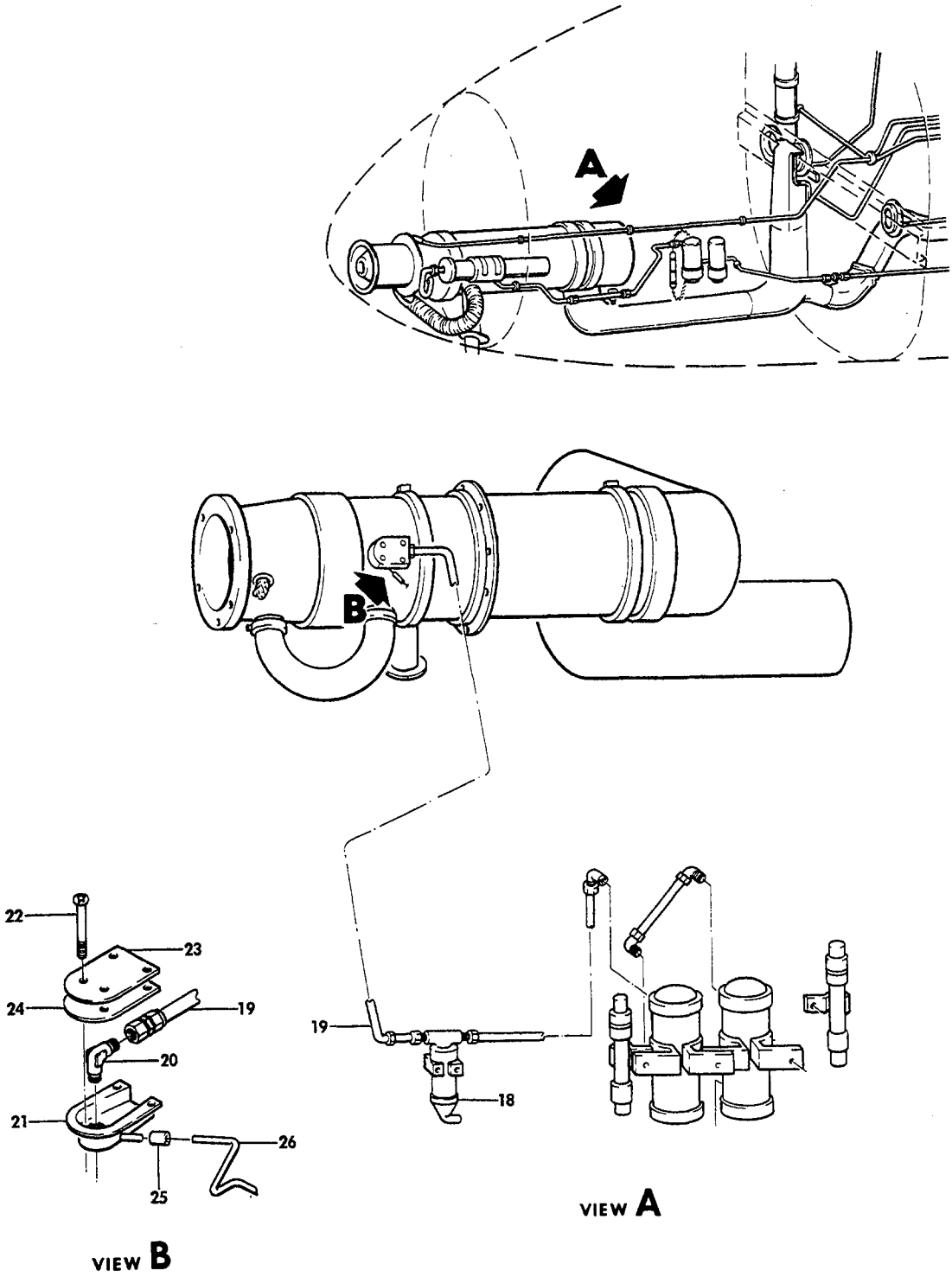

FIGURE 40-20.HEATER FUEL PLUMBING
/SHEET 2 OF 2 SHEETS/

SUB-SECT UNIT & ITEM NO.	PART NO.	DESCRIPTION 1 2 3 4 5 6 7	UNITS PER ASSY	USABLE ON CODE
40-20 - 18	AV1B1473	. VALVE,HTR FUEL SHUT OFF	1	
		/ATTACHING PARTS/		
	AN520-10R	. SCREW	2	
	AN960-10	. WASHER.	2	
	100696D-ZL018	. SPACER.	2	
- 19	R AN6264-4-14 1/4	. HOSE ASSY,HTR FUEL INLET.	1	
- 20	AN822-4	. ELBOW,HTR FUEL INLET.	1	
- 21	50-555018	. SHROUD ASSY,HTR FUEL INLET.	1	
	50-555019	. COVER ASSY,HTR FUEL INLET	1	
		/ATTACHING PARTS/		
- 22	AN520-1032	. SCREW	2	
- 23	50-555019-2	. . COVER	1	
- 24	50-555019-4	. . GASKET.	1	
- 25	106043-0804-0200	. TUBE,CONNECTING/HTR FUEL INLET DRAIN/	1	
		/ATTACHING PARTS/		
	AN995NC32-4	. WIRE.	2	
- 26	95-550000-35	. TUBE,HTR FUEL INLET DRAIN	1	
		/ATTACHING PARTS/		
	MS21919DG5	. CLAMP	1	

CODES OF EFFECTIVITY

1	TC-1 AND TC-2	2	TC-3 THRU TC-190
3	TC-191 THRU TC-259 EXCEPT TC-201	4	TC-201,TC-260 THRU TC-501
5	TC-502 THRU TC-1042	6	TC-1043 THRU TC-1607
7	TE-1 THRU TE-451	8	TE-452 THRU TE-942 EXCEPT TE-938
9	TC-1 THRU TC-1607	10	TE-1 THRU TE-942 EXCEPT TE-938
11	TC-1 THRU TC-1405 TE-1 THRU TE-846	12	TC-1406 THRU TC-1607 TE-847 THRU TE-942 EXCEPT TE-938

"END"

21-40-40
HEATER FUEL PUMP

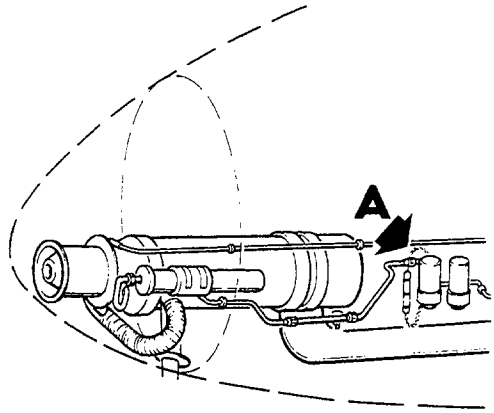

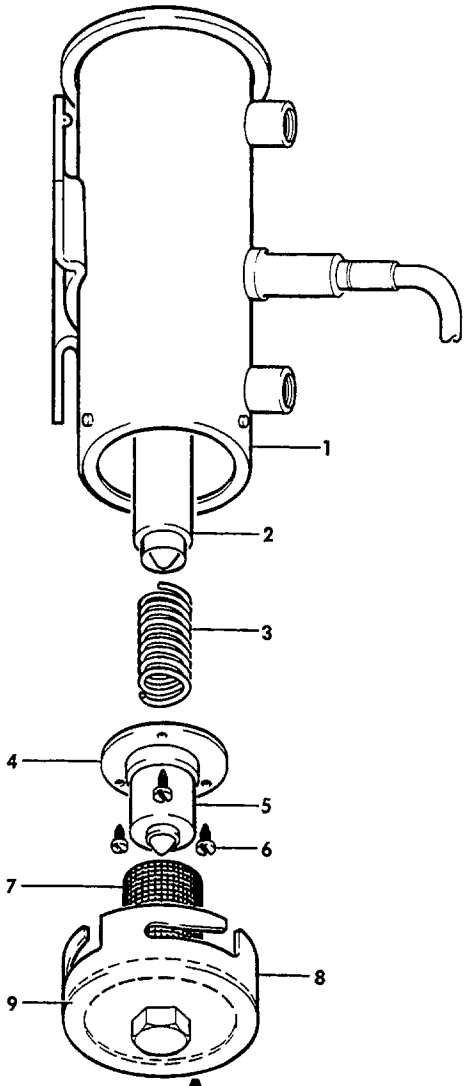

VIEW A

55-413-2

FIGURE 40-40.HEATER FUEL PUMP

ATA CODE & INDEX NO.	PART NO.	DESCRIPTION 1 2 3 4 5 6 7	UNITS PER ASSY	USABLE ON CODE
40-40 - 1	476284	PUMP ASSY,HEATER FUEL	2	
- 2	476474	. PLUNGER ASSY.	1	
- 3	476285	. SPRING,PLUNGER.	1	
- 4	475126	. GASKET,PLUNGER SPRING CUP	1	
- 5	476364	. CUP,PLUNGER SPRING.	1	
		/ATTACHING PARTS/		
- 6	490028	. SCREW	3	
		——+——		
- 7	475634	. SCREEN,FILTER	1	
- 8	476563	. COVER AND GASKET ASSY	1	
- 9	475594	. GASKET,COVER.	1	

END

21-40-60
HEATER BLOWER

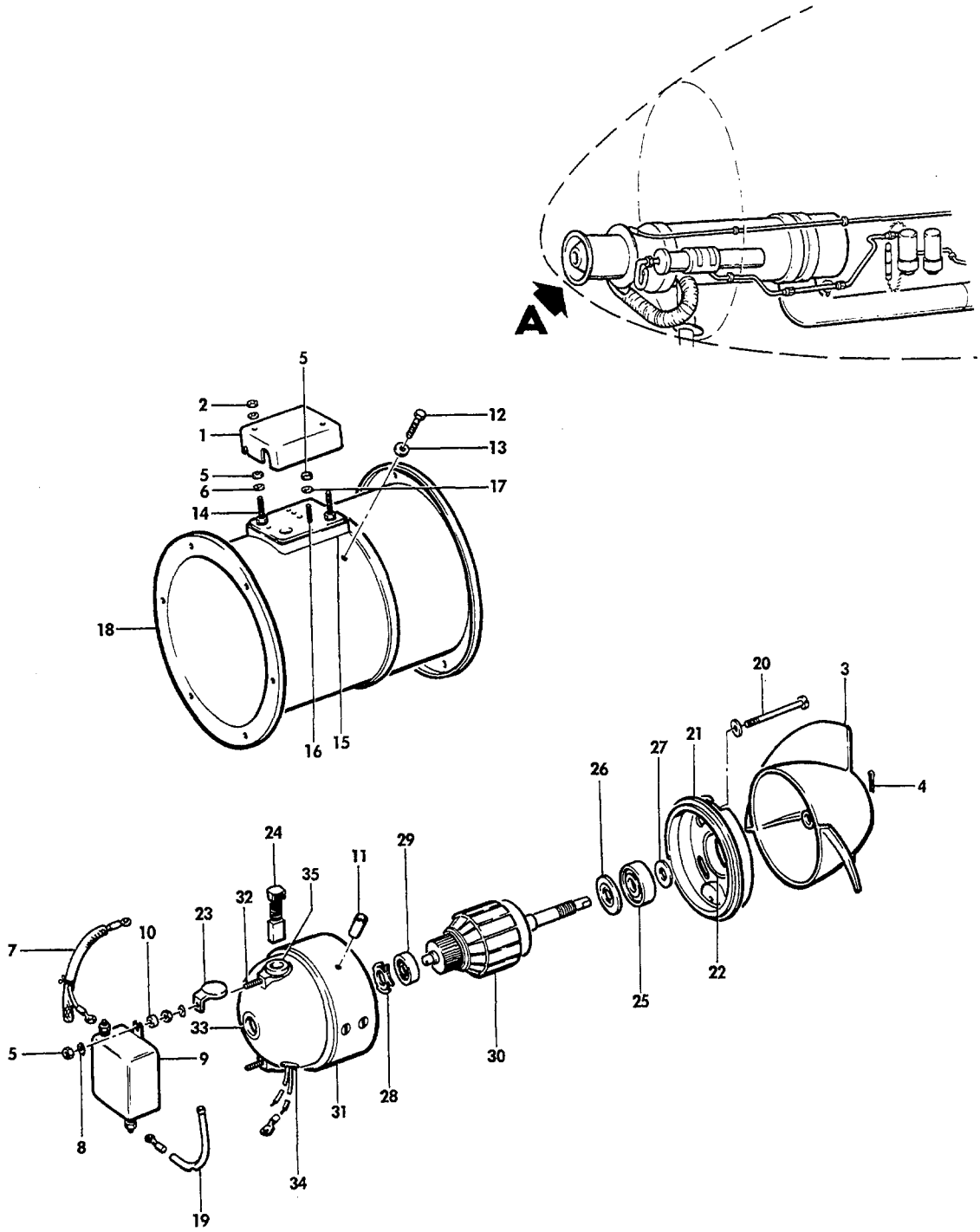

FIGURE 40-60.HEATER BLOWER
/SHEET 1 OF 2 SHEETS/

ATA CODE & INDEX NO.	PART NO.	DESCRIPTION 1 2 3 4 5 6 7	UNITS PER ASSY	USABLE ON CODE
40-60	96-380023	BLOWER ASSY,HEATER AIR/DYNAMIC AIR ENG./. . . .	1	1
		/ALTERNATE FOR JOY MFG BLOWER ASSY/		
- 1	5833B	. COVER,TERMINAL BOARD.	1	1
		/ATTACHING PARTS/		
- 2	MS20364-832C	. NUT	2	
	AN960-8L	. WASHER.	2	
		----*----		
- 3	593D6	. PROPELLER,BLOWER ASSY	1	1
- 4	MS24665-134	. PIN,COTTER.	1	1
- 5	AN340-8	. NUT	4	1
- 6	AN935-8	. WASHER.	4	1
- 7	1580-2	. LEAD AND SHIELD,ELECTRIC.	1	1
- 8	AN936B8	. WASHER.	4	1
- 9	1591	. FILTER,RADIO INTERFERENCE	1	1
- 10	1081-21	. SPACER,SLEEVE/FIBER/.	2	1
- 11	1081-14	. SPACER,SLEVE/ALUMINUM/.	3	1
- 12	MS20074-03-10	. BOLT.	3	1
- 13	AN960-10	. WASHER.	3	1
	437-7	. TERMINAL BOARD ASSY	1	1
		/ATTACHING PARTS/		
- 14	AN515-8-2C	. SCREW	2	
	AN936B8	. WASHER.	2	
	AN935-8	. WASHER,LOCK	2	
	AN340-8	. NUT	2	
		----*----		
- 15	329B4	. . TERMINAL BOARD.	1	1
- 16	K102B4-5	. . SCREW	1	1
- 17	AN960-8	. . WASHER.	1	1
- 18	A2781-172	. HOUSING AND IDENTIFICATION PLATE ASSY	1	1
	1581-37	. . HOUSING,VANEAXIAL FAN	1	1
	2068-265	. . PLATE,IDENTIFICATION.	1	1
- 19	1579	. SHIELD,ELECTRIC LEAD.	1	1
	M2916V	. MOTOR ASSY/DC/.	1	1
	5801N4	. . BELL ASSY,SHAFT END	1	1
		/ATTACHING PARTS/		
- 20	AN500A10-32	. . SCREW	2	
	AN960-10L	. . WASHER.	2	
	AN936B8	. . WASHER.	2	
	AN340-8	. . NUT	2	
		----*----		
- 21	5801N21	. . . BELL,SHAFT END.	1	1
- 22	2951-11	. . . INSERT,BEARING.	1	1
- 23	417H2	. . CAP,BRUSH	2	1
- 24	299-6	. . BRUSH ASSY.	2	1
- 25	K271-200SSL	. . BEARING,BALL.	1	1
- 26	536-2	. . SHIELD,BEARING.	1	1
- 27	461	. . SLINGER,FLAT.	1	1
- 28	K129-4	. . SPRING.	1	1
- 29	K271-38SSL	. . BEARING,BALL.	1	1
- 30	313B38	. . ARMATURE ASSY,MOTOR	1	1
	2240-14	. . STATOR AND END BELL ASSY.	1	1
- 31	2238-14	. . . STATOR,MOTOR.	1	1
- 32	AN565D8H14	. . . SCREW,SET	2	1
- 33	5803J13	. . . BELL,COMMUTATOR END	1	1
- 34	K323-4-6	. . . GROMMET,ELASTIC	1	1
- 35	447A39	. . . HOLDER AND LEAD,BRUSH	1	1

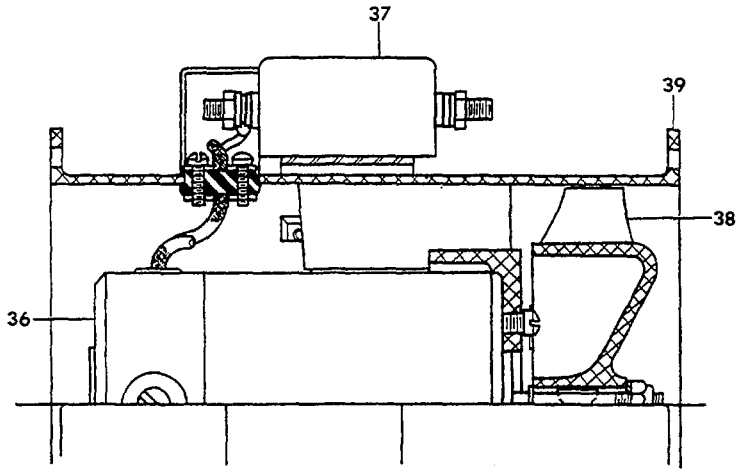

5S-414-7

FIGURE 40-60.HEATER BLOWER
/SHEET 2 OF 2 SHEETS/

ATA CODE & INDEX NO.	PART NO.	DESCRIPTION 1 2 3 4 5 6 7	UNITS PER ASSY	USABLE ON CODE
40-60	96-380023	BLOWER ASSY,HEATER AIR/JOY MANUFACTURING/ . . . /ALTERNATE FOR DYNAMIC AIR ENG BLWR ASSY/	1	1
- 36	500904-4651	. MOTOR,HEATER AIR BLOWER/JOY/.	1	1
	25T18A17	. . BRUSH ASSY.	2	1
	15T370A	. . ARMATURE.	1	1
	29T74A	. . FIELD	2	1
	14T3	. . BRUSH CAP	2	1
	39T178-88	. . BRUSH HEAD.	1	1
	39T171-7	. . REAR HEAD	1	1
- 37	505548-80	. FILTER,RADIO NOISE.	1	1
- 38	1386115-1	. ROTOR,FAN	1	1
- 39	1386116-1	. CASING,FAN.	1	1
	96-380023	BLOWER ASSY,HEATER AIR/AEROSPACE SYSTEMS. . . . & COMPONENTS,INC./OVERHAUL ITEM NO BKDN./	1	2

CODES OF EFFECTIVITY

1 TC-1 THRU TC-1405
TE-1 THRU TE-846

2 TC-1405 THRU TC-1607
TE-847 THRU TE-942
EXCEPT TE-938

"END"

CHAPTER 23

COMMUNICATIONS

LIST OF PAGES & TABLE OF CONTENTS
FOR
CHAPTER 23-00-00 COMMUNICATIONS

CHAP/SUB-SECT & UNIT	PAGE NO.	EFFECTIVE DATE	TABLE OF CONTENTS
23-00-00	1	04/30/84	LIST OF PAGES & TABLE OF CONTENTS
23-60-01	1	03/10/78	STATIC WICKS
23-60-01	2	03/10/78	
23-60-01	3	03/10/78	

23-60-01
STATIC WICKS

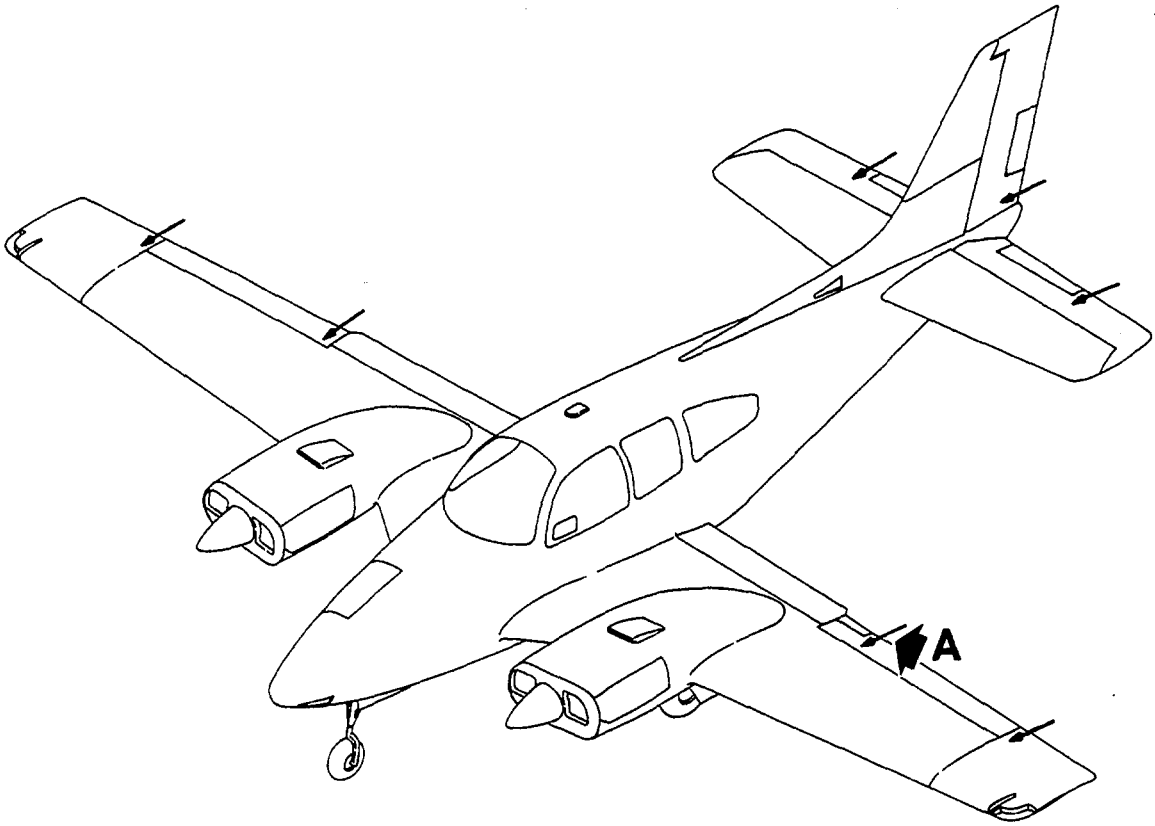

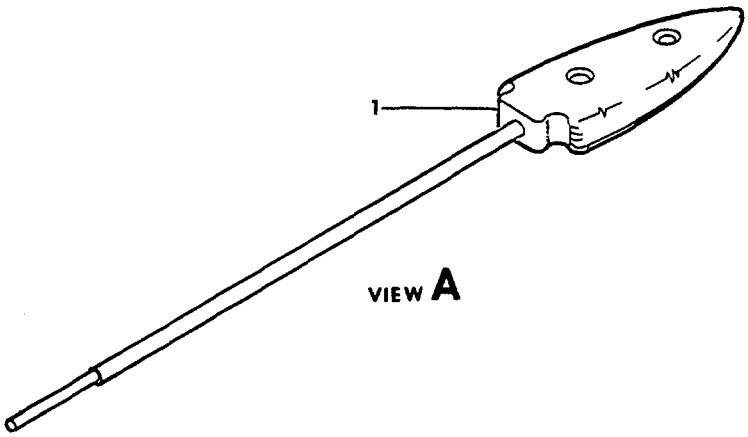

55-363-3

FIGURE 60-01.STATIC WICKS

ATA CODE & INDEX NO.	PART NO.	DESCRIPTION 1 2 3 4 5 6 7	UNITS PER ASSY	USABLE ON CODE
60-01	96-590007	WICK INSTL,STATIC DISCHARGE	NP	
- 1	35-5010-3	. WICK ASSY,STATIC/SUPERSEDES 35-5010 & -1/ . .	7	
		/ATTACHING PARTS/		
	AN515-6R8	. SCREW	2	
	105090-032-1-012	. WASHER.	4	
	AN364-632	. NUT	2	

"END"

CHAPTER

24

ELECTRICAL POWER

LIST OF PAGES & TABLE OF CONTENTS
FOR
CHAPTER 24-00-00 ELECTRICAL POWER

CHAP/SUB-SECT & UNIT	PAGE NO.	EFFECTIVE DATE	TABLE OF CONTENTS
24-00-00	1	04/05/85	LIST OF PAGES & TABLE OF CONTENTS
24-00-01	1	03/10/78	FUSELAGE ELECTRICAL EQUIPMENT
24-00-01	2	03/10/78	
24-00-01	3	04/05/85	
24-00-01	4	03/10/78	
24-00-01	5	04/05/85	
24-00-01	6	03/10/78	
24-00-01	7	04/05/85	
24-00-01	8	03/10/78	
24-00-01	9	03/10/78	
24-00-01	10	03/10/78	
24-00-01	11	04/05/85	
24-01-01	1	03/10/78	WING ELECTRICAL
24-01-01	2	03/10/78	
24-01-01	3	04/05/85	
24-01-01	4	03/10/78	
24-01-01	5	03/10/78	
24-01-01	6	03/10/78	
24-01-01	7	04/05/85	
24-30-01	1	03/10/78	ALTERNATOR
24-30-01	2	03/10/78	TC-350,TC-763,TC-768,TC-770,TC-784,TC-816
24-30-01	3	03/10/78	AND TE-1 THRU TE-942 EXCEPT TE-938
24-30-10	1	03/10/78	GENERATOR /25 AMP/
24-30-10	2	03/10/78	TC-1 THRU TC-1607 EXCEPT TC-350,TC-763,TC-768,
24-30-10	3	03/10/78	TC-770,TC-784 AND TC-816
24-30-20	1	03/10/78	BATTERY INSTALLATION
24-30-20	2	03/10/78	
24-30-20	3	03/10/78	
24-40-01	1	03/10/78	EXTERNAL POWER RECEPTACLE
24-40-01	2	03/10/78	
24-40-01	3	03/10/78	

24-00-01
FUSELAGE ELECTRICAL EQUIPMENT

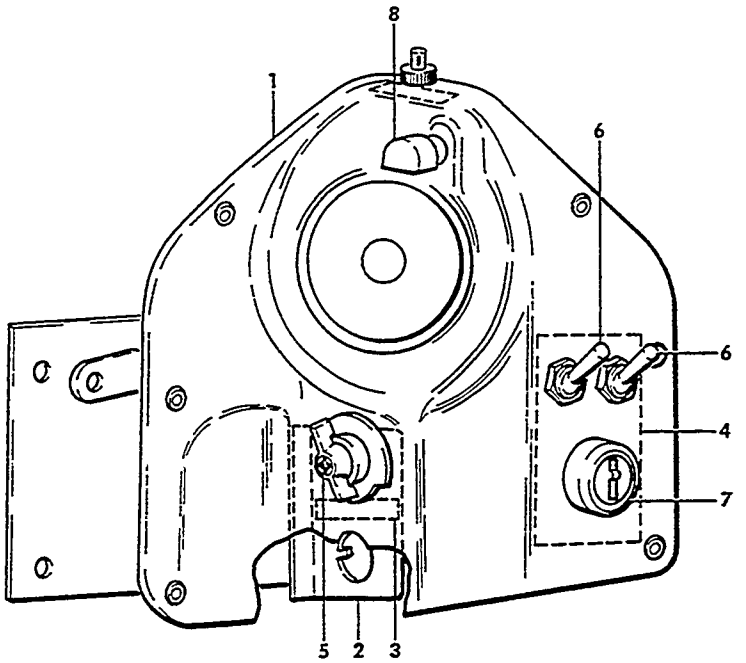

VIEW A

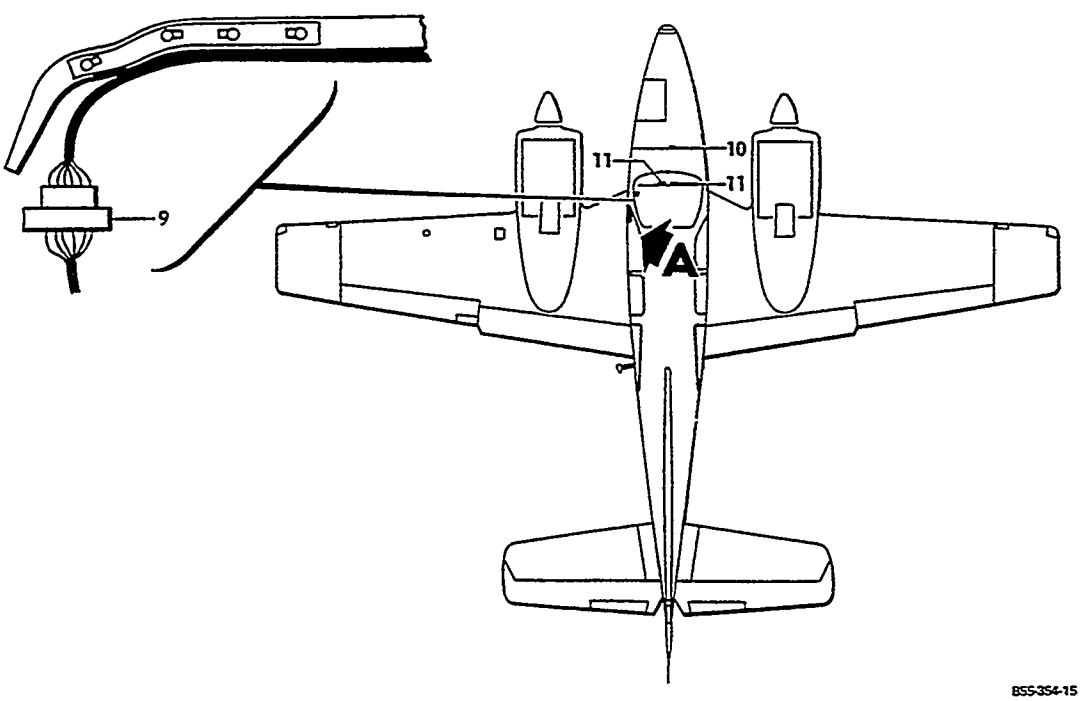

BSS-354-15

FIGURE 00-01. ELECTRICAL EQUIPMENT, FUSELAGE
/SHEET 1 OF 5 SHEETS/

SUB-SECT UNIT & ITEM NO.	PART NO.	DESCRIPTION 1 2 3 4 5 6 7	UNITS PER ASSY	USABLE ON CODE
00-01	96-360000	ELECTRICAL EQUIPMENT INSTALLATION,FUSELAGE. . . /GENERATOR/	NP	1
	96-360002	ELECTRICAL EQUIPMENT INSTALLATION,FUSELAGE. . . /ALTERNATOR/	NP	2
	96-360002-7	ELECTRICAL EQUIPMENT INSTALLATION,FUSELAGE. . . /ALTERNATOR/	NP	3
	96-364001	ELECTRICAL EQUIPMENT INSTALLATION,FUSELAGE. . . /ALTERNATOR/	NP	4
	R 96-364033-11	. ESCUTCHEON ASSY,IGNITION PANEL/GENERATOR/ . .	1	5
	96-364060-3	. ESCUTCHEON ASSY,IGNITION PANEL/GENERATOR/ . .	1	6
	96-364060-9	. ESCUTCHEON ASSY,IGNITION PANEL/ALTERNATOR/. . /ATTACHING PARTS/	1	7
	NAS384-6-20P	. SCREW	6	
	NAS36186P	. WASHER.	6	
	A1785-6Z1	. NUT	4	
		---*---		
	96-364033-9	. . ESCUTCHEON.	1	5
	96-364060-7	. . ESCUTCHEON.	1	6
- 1	96-364060-13	. . ESCUTCHEON.	1	7
- 2	95-364029-3	. . BRACKET	1	
- 3	95-364030	. . PLACARD	1	
- 4	96-364038-1	. . PLATE,IDENT,BATTERY & GENERATOR SWITCH. . .	1	
	96-364052	. . PLATE,IDENT,BATTERY & ALTERNATOR SWITCH . .	1	
	95-360000-13	. PLATE	1	
- 5	10-357230-1	. SWITCH,IGNITION	2	
	10-126676	. PLACARD	2	
- 6	R 35-380053-654	. SWITCH,GENERATOR ON/OR ALTERNATOR ON/	2	
	35-380052	. KNOB,TOGGLE SWITCH.	2	
- 7	35-590070-39	. SWITCH,BATTERY.	1	
- 8	A897081-327	. POST LIGHT.	1	
	313	. LAMP,GLARESHIELD.	12	
- 9	1-480340-0	. PLUG,GLARESHIELD.	1	
	61010-1	. PIN,GLARESHIELD CONNECTOR	6	
	1-480270-0	. CONNECTOR	1	
	61009-1	. SOCKET.	6	
	D165-100-2	. HOOD,GLARESHIELD.	4	
	MDL3	. FUSE,HEATER	2	
- 10	4522	. BLOCK,FUSEHOLDER. . . . . /ATTACHING PARTS/	1	
	AN507-6R8	. SCREW	2	
	AN936D6	. WASHER,LOCK	2	
		---*---		
	96-364064	. DECAL	1	
	3 OHM 10 WATT	. RESISTOR,HEATER . . . . . /ATTACHING PARTS/	1	
	AN515-8-36	. SCREW	1	
	3052	. WASHER,FIBER.	1	
	AN936S8	. WASHER,LOCK	1	
		---*---		
- 11	58-364041	. PRINTED CIRCUIT BOARD ASSY,FUEL QUANTITY IND. /ATTACHING PARTS/	2	8
	MS24693S9	. SCREW	2	
	AN960-4	. WASHER.	2	
	MS21044N04	. NUT	2	
		---*---		
	1N752A	. . DIODE	1	
	2N4036	. . TRANSISTOR.	1	
	RC07GF302J	. . RESISTOR.	1	
	RC07GF471J	. . RESISTOR.	2	
	3800P5000 OHM	. . POTENTIOMETER	1	

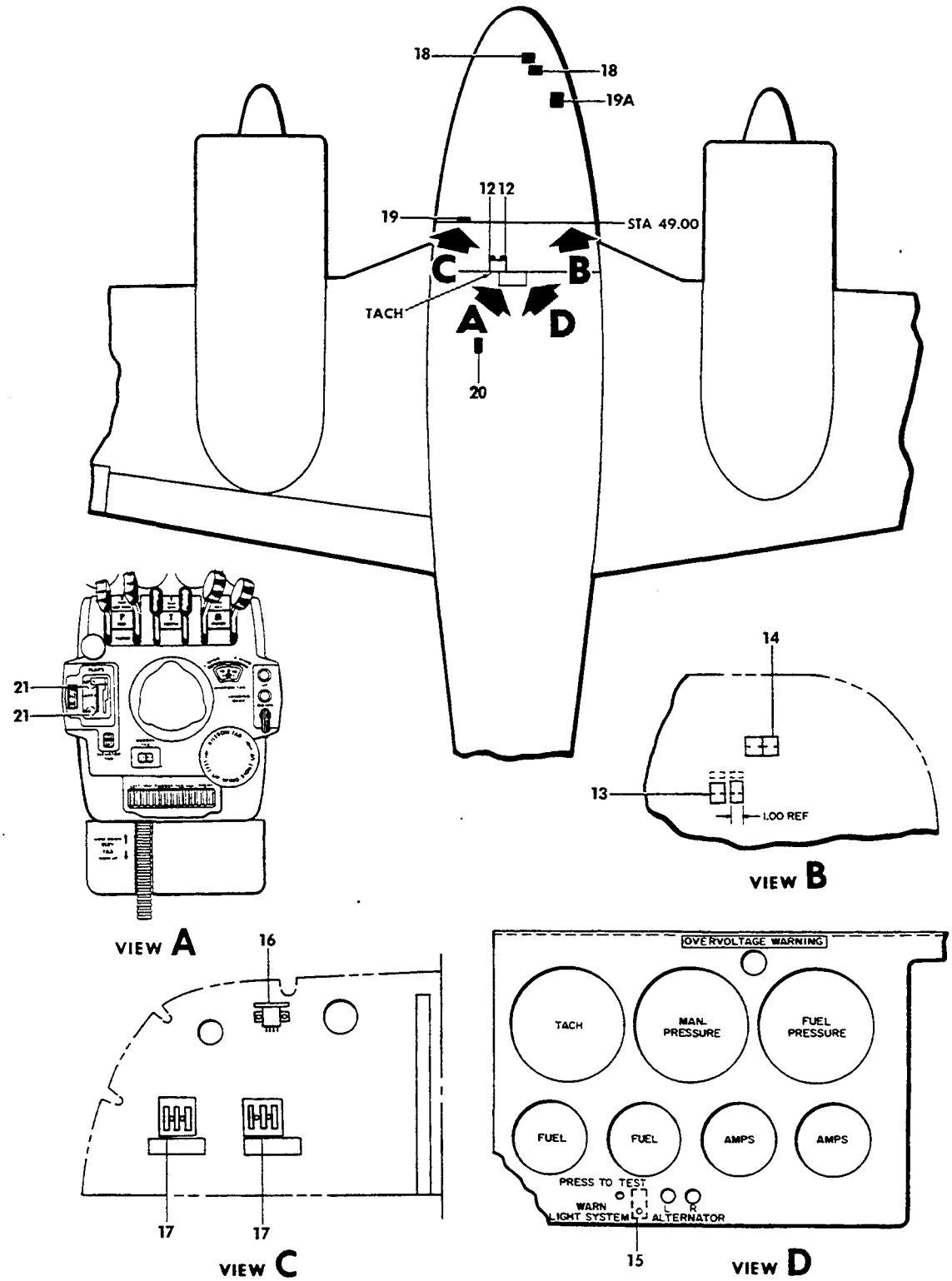

FIGURE 00-01. ELECTRICAL EQUIPMENT, FUSELAGE
/SHEET 2 OF 5 SHEETS/

SUB-SECT UNIT & ITEM NO.	PART NO.	DESCRIPTION 1 2 3 4 5 6 7	UNITS PER ASSY	USABLE ON CODE
00-01 - 12	MS3106A14S1S	. CONNECTOR	2	
	AGC5	. FUSE,AMMETER SHUNT.	6	
- 13	4532	. BLOCK,FUSE HOLDER	2	
		/ATTACHING PARTS/		
	AN507-6R8	. SCREW	2	
	AN936D6	. WASHER,LOCK	2	
		----*----		
	58-364029	. DECAL,AMMETER SHUNT FUSES	2	
- 14	MS91586-1	. SHUNT/GENERATOR/.	2	
	MS91586-2	. SHUNT/ALTERNATOR/	2	
		/ATTACHING PARTS/		
	AN515-8R12	. SCREW	2	
	AN93688	. WASHER,LOCK	2	
	AN960-8L	. WASHER.	2	
		----*----		
	MS25171-4S	. COVER,TERMINAL.	4	
- 15	1-480340-0	. PLUG,ALTERNATOR LIGHT/USED WITH ALTERNATOR/ .	1	
	61010-1	. PIN,CONTACT	6	
	1-480270-0	. CONNECTOR/USE WITH ALTERNATOR/.	1	
	81009-1	. SOCKET,CONTACT/USE WITH ALTERNATOR/	6	
	MS21919DG3	. CLAMP/USED FOR STRAIN RELIEF/	1	
		/ATTACHING PARTS/		
	FH8C6CP-L058N	. SCREW	1	
	MS21042L08	. NUT	1	
		----*----		
	R 138-2	. RELAY,OVER VOLTAGE.	1	9
	R 50-380048-3	. RELAY,ALTERNATOR OUT.	1	10
- 16	R 36-380000-3	. ALTERNATOR OUT SENSOR	1	11
		/ATTACHING PARTS/		
	AN515-6R24	. SCREW	2	
	AN960-6	. WASHER.	2	
		----*----		
	AN936B6	. WASHER,LOCK	2	
	AGC2	. FUSE,ALTERNATOR FIELD & ALTERNATOR OUT. . . .	6	
- 17	4532	. BLOCK,FUSEHOLDER.	2	
		/ATTACHING PARTS/		
	AN507-6R8	. SCREW	2	
	AN936D6	. WASHER,LOCK	2	
		----*----		
	96-364037-5	. PLACARD,ALTERNATOR FIELD FUSES.	1	
	96-364059	. PLACARD,ALTERNATOR OUT FUSES.	1	
- 18	60-389017-1	. VOLTAGE REGULATOR & OVER VOLTAGE PROTECTOR. .	2	
		/ALTERNATOR/SEE CHAPTER 71-00-01 FOR		
		VOLTAGE REGULATOR TO USE WITH GENERATOR/		
		/ATTACHING PARTS/		
	AN520-416R10	. SCREW	3	
	AN520-416R16	. SCREW	3	
	100696A-ZW012	. SPACER.	3	
	AN960-416	. WASHER.	3	
		----*----		
- 19	MS3106A18-1S	. CONNECTOR,VOLTAGE REG./ALTERNATOR/.	2	
- 19A	118654	. BATTERY	1	
	118658	. BATTERY/OPTIONAL INSTL & REQUIRES QTY OF 2/ .	2	
	95-361018	. SPACER/USE WITH 118654/	1	
	414-189412	. BUS BAR/USE WITH 118658 BATTERIES/SEE CHAPTER	1	
		24-30-20 FOR BATTERY BOX LIDS/		
- 20	1864	. LAMP,CABIN/SEE CHAPTER 33-11-10/.	2	
	1495	. LAMP,3RD & 4TH SEAT READING/SEE CHAPTER 33/ .	2	
- 21	AN3140-327	. LAMP,FLAP POSITION INDICATOR/SEE 27-50-30 FOR	2	
		FLAP LIMIT SWITCHES AND POSITION XMTR/		

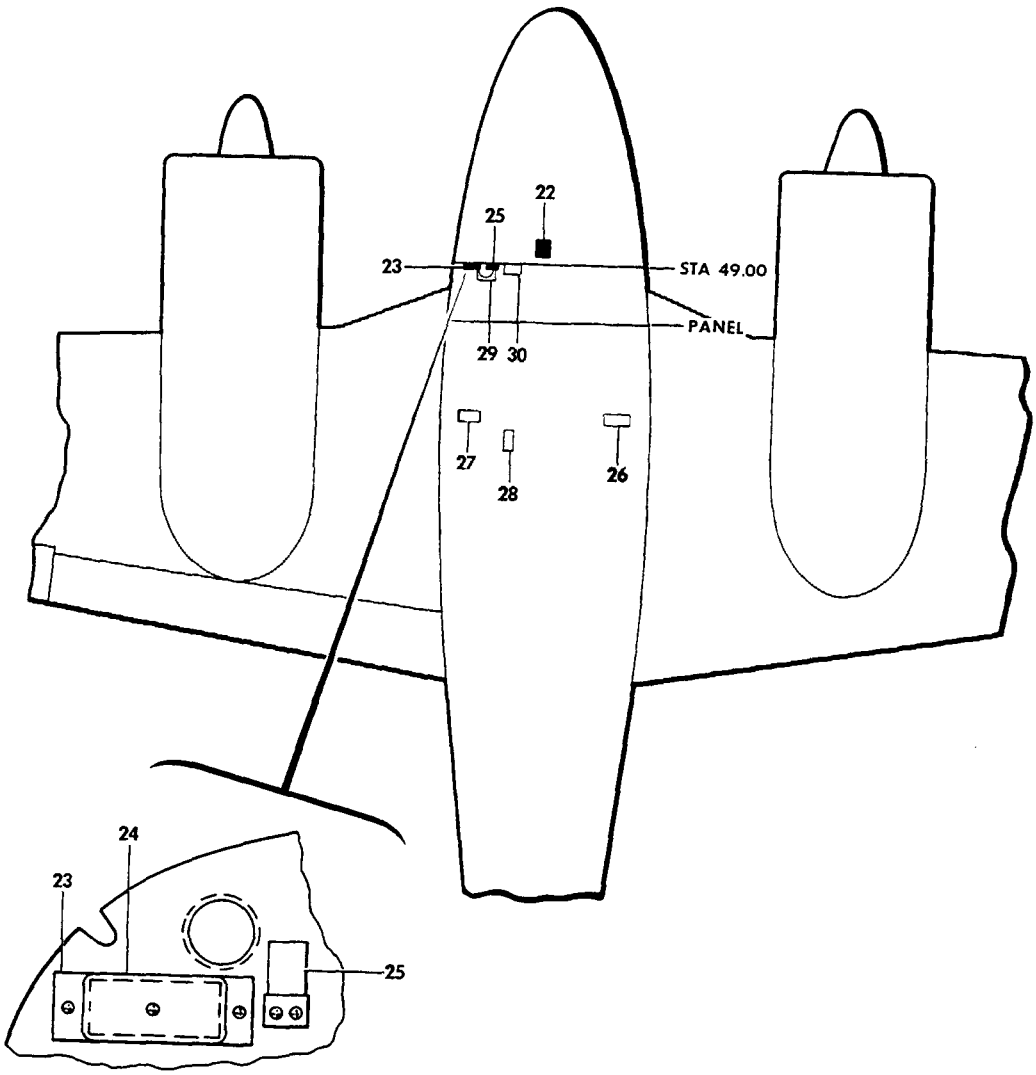

B55-354-17

FIGURE 00-01.ELECTRICAL EQUIPMENT,FUSELAGE
/SHEET 3 OF 5 SHEETS/

SUB-SECT UNIT & ITEM NO.	PART NO.	DESCRIPTION 1 2 3 4 5 6 7	UNITS PER ASSY	USABLE ON CODE
00-01	1819	. LAMP,TAB INDICATOR.	2	
	D165-100-2	. FILTER,TAB INDICATOR LIGHT.	2	
	2505	. SOCKET,TAB INDICATOR LAMP	2	
	R AN3140-327	. LAMP,LANDING GEAR INDICATOR 53-25-01/	2	
	105922-5A11-010	. BOLT,BATTERY GROUND	1	
	AN960-516	. WASHER,BATTERY GROUND	3	
	AN316-5R	. NUT,BATTERY GROUND.	1	
	AN935-516	. WASHER,BATTERY GROUND	1	
	AN315-5R	. NUT,BATTERY GROUND.	1	
- 22	96-364058	. LIGHT INSTL,NOSE BAGGAGE COMPT/SEE CHAPTER. . 33-30-01/	NP	
- 23	58-364000-5	. COVER . . . . . /ATTACHING PARTS/	1	
	MS35206-230	. SCREW	2	
	AN936A6	. WASHER,LOCK	2	
	MS35206-216	. SCREW	1	
	AN960-4L	. WASHER.	1	
	MS21044D04	. NUT	1	
		----*----		
- 24	58-364000-9	. TERMINAL BOARD ASSY,LANDING GEAR POSITION . . INDICATING SYSTEM	1	
	1N4005	. . DIODE	10	
	RC32GF511K	. . RESISTOR.	2	
	RC42GF151K	. . RESISTOR.	1	
	58-364000-7	. . TERMINAL BOARD.	1	
- 25	281XDX24VDC	. RELAY/ANNUNCIATOR DIMMING/. . . . . /ATTACHING PARTS/	1	
	AN340-3	. NUT	1	
	AN93633	. WASHER,LOCK	1	
		----*----		
	35-344267-17	. BRACKET,RELAY MOUNTING. . . . . /ATTACHING PARTS/	1	
	MS35206-230	. SCREW	2	
	AN936A6	. WASHER,LOCK	2	
		----*----		
- 26	6046H39A	. RELAY,DYNAMIC BRAKING . . . . . /ATTACHING PARTS/	1	
	AN520-10	. SCREW	2	
	AN960-10L	. WASHER.	2	
		----*----		
- 27	90-28	. NAVIGATION LIGHT FLASHER UNIT/NOT USED WITH . ROTATING BEACON/ /ATTACHING PARTS/	1	
	AN520-10	. SCREW	3	
	AN936810	. WASHER,LOCK	3	
		----*----		
- 28	95-364011	. SWITCH ASSY,LANDING GEAR LIMIT.	1	
- 29	169-380021-11	. HORN,STALL WARNING. . . . . /ATTACHING PARTS/	1	
	AN520-10R	. SCREW	2	
	AN936810	. WASHER,LOCK	2	
	AN960-10	. WASHER.	2	
		----*----		
- 30	169-380021-9	. HORN,LANDING GEAR WARNING . . . . . /ATTACHING PARTS/	1	
	AN520-10R8	. SCREW	2	
	AN936810	. WASHER,LOCK	2	
	AN960-10	. WASHER.	2	
		----*----		

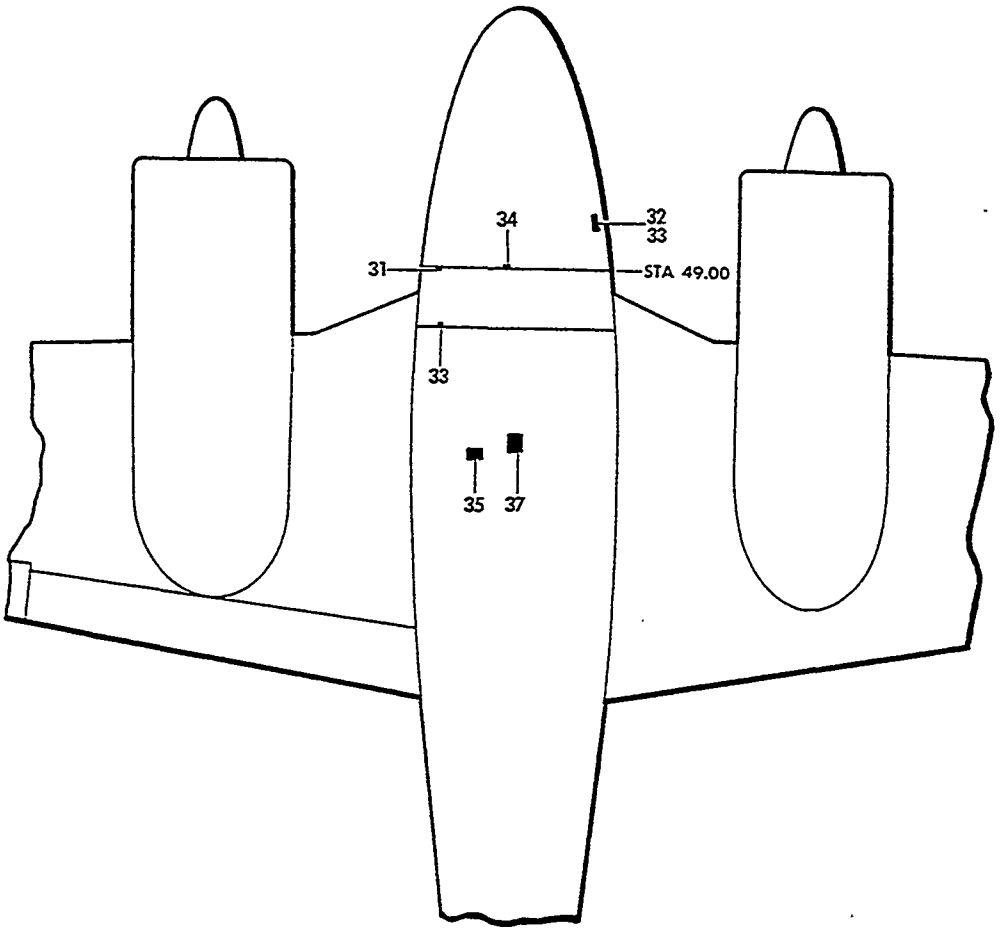

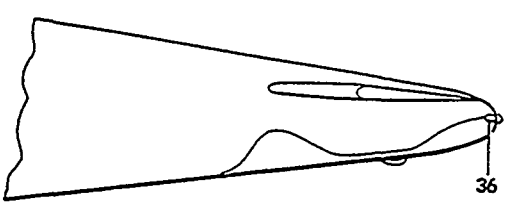

B55-354-18

FIGURE 00-01.ELECTRICAL EQUIPMENT,FUSELAGE
/SHEET 4 OF 5 SHEETS/

ATA CODE & INDEX NO.	PART NO.	DESCRIPTION 1 2 3 4 5 6 7	UNITS PER ASSY	USABLE ON CODE
00-01 - 31	R102	. FLASHER & MOUNT	1	
		/ATTACHING PARTS/		
	AN520-6R6	. SCREW	1	
	AN960-6L	. WASHER	1	
	MS20365-632	. NUT	1	
	1-3/4D48F40	. RESISTOR	1	
		/ATTACHING PARTS/		
	AN515-8B36	. SCREW	1	
	2103	. WASHER,FIBER	2	
	MS20365-832	. NUT	1	
- 32	6041H189	. RELAY,BATTERY	1	
		/ATTACHING PARTS/		
	AN4A	. BOLT	2	
	96-364023	. COVER,RELAY	1	
		/ATTACHING PARTS/		
	AN520-10R8	. SCREW	2	
	AN960-10	. WASHER	2	
	1N2484	. DIODE	2	
- 33	MS3106A10SL3S	. CONNECTOR/TURN & BANK IND/	1	
		/ATTACHING PARTS/		
	MS3057-4	. CLAMP	1	
- 34	MS3106-14S5S	. PLUG	1	
- 35	50-364308-127	. TRANSISTOR ASSY	2	
		/ATTACHING PARTS/		
	AN515-6R6	. SCREW	4	
	AN936B6	. WASHER,LOCK	4	
	2TS1	. . SOCKET	1	
		/ATTACHING PARTS/		
	AN530-6R8	. . SCREW	2	
	2N3055	. . TRANSISTOR	1	
		/ATTACHING PARTS/		
	AN507-440R8	. . SCREW	4	
	MS20365-440	. . NUT	4	
	50-364308-223	. . HEAT SINK	1	
		/ATTACHING PARTS/		
	AN515-6R8	. . SCREW	4	
	AN960-6L	. . WASHER	4	
	MS20365-632	. . NUT	4	
	50-364308-67	. . BRACKET	1	
	MS21919D64	. CLAMP/ATTACH TO TRANSISTOR ASSY/	1	
- 36	1203	. LAMP,TAIL CONE	1	
	A2064-1683	. LAMP ASSY,TAIL CONE	1	
		/ATTACHING PARTS/		
	AN520-4R	. SCREW	2	
	AN3111-2	. RING,BONDING	1	
- 37	35-364151-57	MOTOR & GEARBOX ASSY,FLAP/SEE CHAPTER 27-50-10/	1	

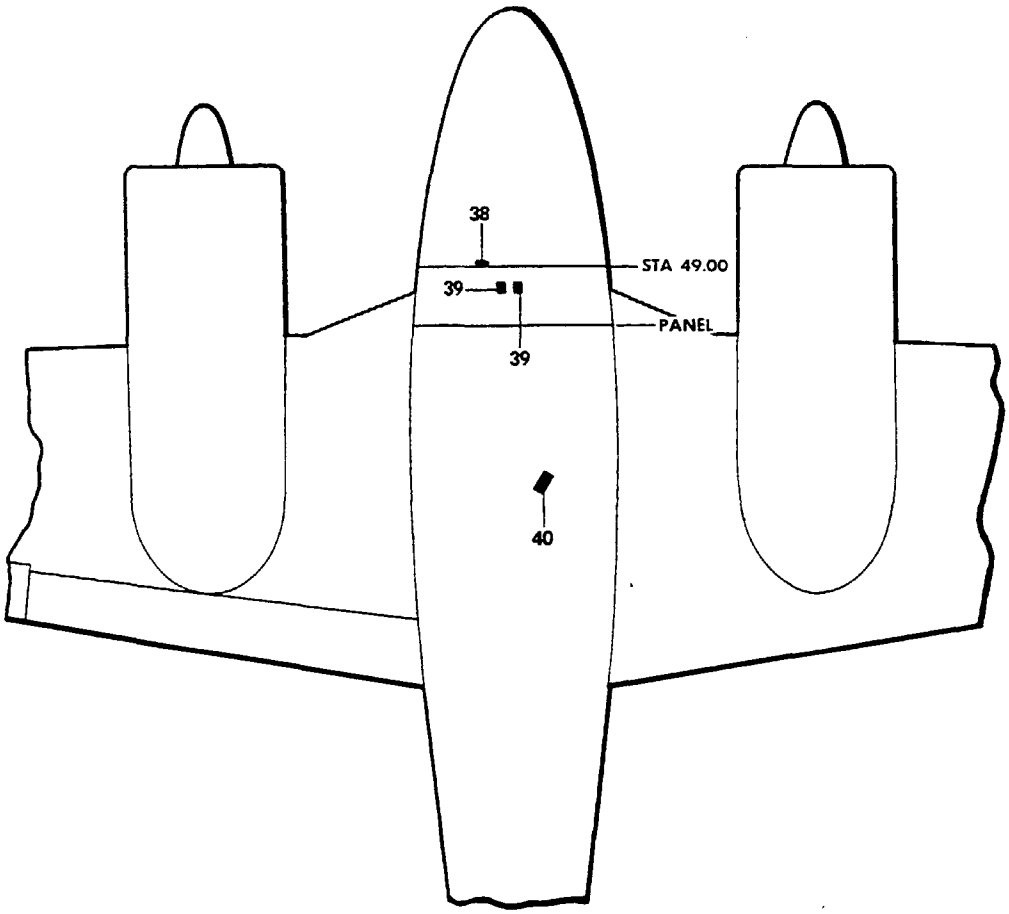

855-352-19

FIGURE 00-01.ELECTRICAL EQUIPMENT,FUSELAGE
/SHEET 5 OF 5 SHEETS/

SUB-SECT UNIT & ITEM NO.		PART NO.	DESCRIPTION 1 2 3 4 5 6 7	UNITS PER ASSY	USABLE ON CODE
00-01 - 38	R	6041H190	RELAY,STARTER	2	
- 39	R	AN3234-2	SWITCH,LANDING GEAR WARNING	2	
- 40		96-380022	LANDING GEAR MOTOR ASSY/SEE CHAPTER 32-30-30/ .		
		58-360000-609	WIRE HARNESS ASSY,GLARESHIELD	1	
		58-360028-603	CABLE & LIGHT ASSY/OPTIONAL STROBE LIGHT,AFT/ .	1	
		58-360025-615	HARNESS ASSY,STROBE LIGHT	1	
		96-360000-613	HARNESS ASSY,L.G. WARNING HORN & FLASHER. . . .	1	
		96-360000-605	HARNESS ASSY/PANEL ASSY/.	1	
		95-360002-649	. WIRE ASSY	1	
		96-360000-607	. WIRE ASSY/GENERATOR/.	1	
		96-360002-607	. WIRE ASSY/ALTERNATOR/	1	
		96-360011-687	. WIRE ASSY	1	
		96-324194-601	WIRE ASSY,RHEOSTAT.	1	
		96-360011-605	WIRE HARNESS ASSY	1	
		96-360011-611	WIRE ASSY/PANEL/.	1	
		96-360011-612	WIRE HARNESS ASSY/MAIN INST PANEL,RH/	1	
		96-360011-617	WIRE HARNESS ASSY,THROTTLE LH/AT CONSOLE/ . . .	1	
		96-360011-618	WIRE HARNESS ASSY,THROTTLE RH/AT CONSOLE/ . . .	1	
		96-360011-643	WIRE ASSY/TACHOMETER GENERATOR LH/.	1	
		96-360011-644	WIRE ASSY/TACHOMETER GENERATOR RH/.	1	
		96-360011-645	WIRE ASSY/CYLINDER HEAD TEMP LH/.	1	
		96-360011-646	WIRE ASSY/CYLINDER HEAD TEMP RH/.	1	
		96-360011-658	WIRE ASSY/POST LIGHT RHEOSTAT/.	1	

CODES OF EFFECTIVITY

1	TC-1 THRU TC-1607 EXCEPT TC-350,TC-763 TC-768,TC-770,TC-784 AND TC-816	2	TC-763,TC-768,TC-770 TC-784 & TC-816
3	TC-350, TE-1 THRU TE-767	4	TE-768 THRU TE-942 EXCEPT TE-938
5	TC-1 THRU TC-1042 EXCEPT TC-350	6	TC-1043 THRU TC-1402 TC-350 TE-1 THRU TE-846
7	TC-1403 THRU TC-1607 TE-847 THRU TE-942 EXCEPT TE-938	8	TC-1299 THRU TC-1607 TE-768 THRU TE-942 EXCEPT TE-938
9	TC-1 THRU TC-1042 TE-1 THRU TE-451	10	TC-1043 THRU TC-1223 TE-452 THRU TE-695
11	TC-1224 THRU TC-1607 TE-696 THRU TE-937 TE-939 THRU TE-942		

24-01-01
WING ELECTRICAL

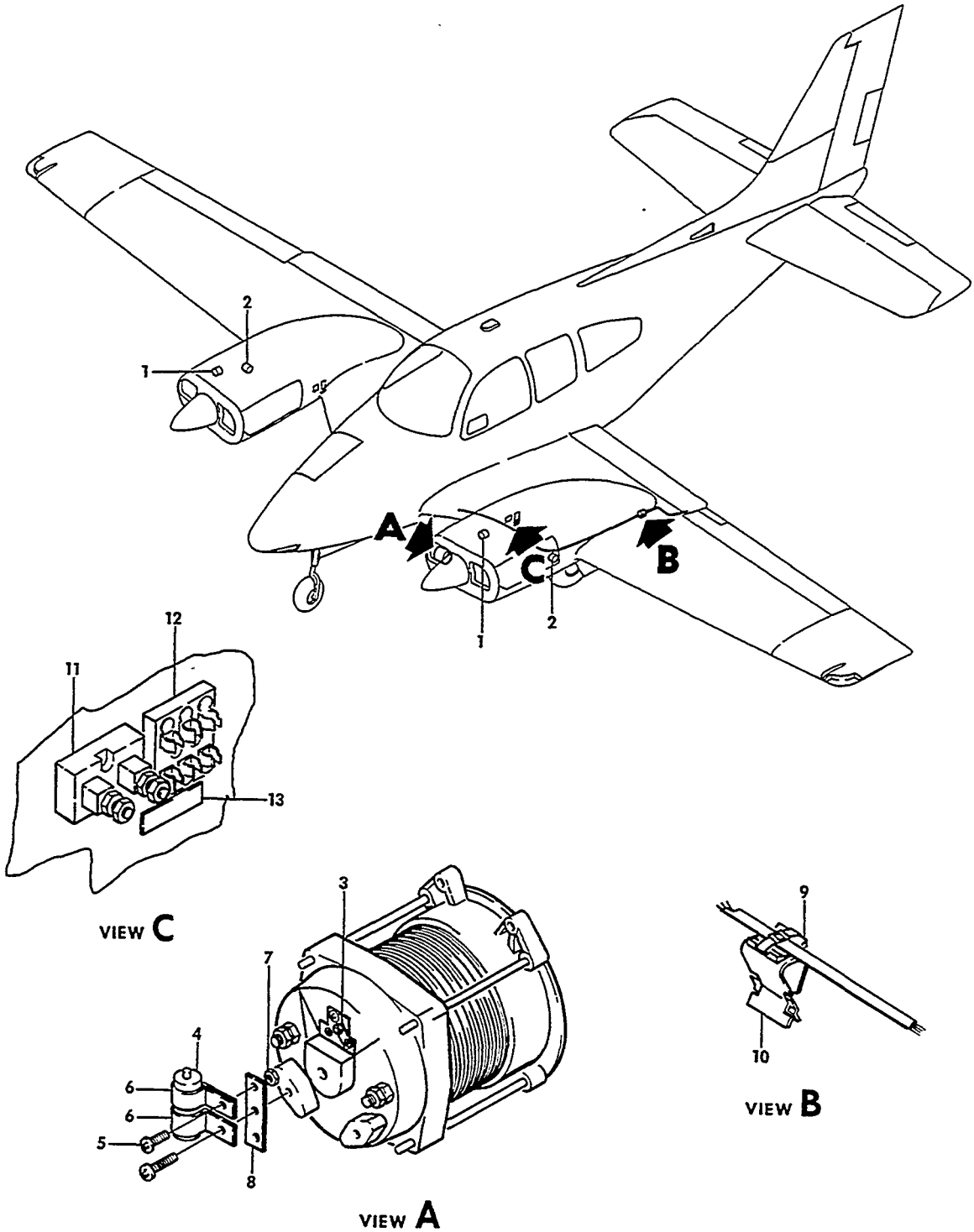

FIGURE 01-01.WING ELECTRICAL
/SHEET 1 OF 3 SHEETS/

SUB-SECT UNIT & ITEM NO.	PART NO.	DESCRIPTION 1 2 3 4 5 6 7	UNITS PER ASSY	USABLE ON CODE
01-01	96-360000	ELECTRICAL EQUIPMENT INSTL/WING ONLY/GENERATOR.	NP	1
	96-360002	ELECTRICAL EQUIPMENT INSTL/WING ONLY/ALTERNATOR	NP	2
	96-360002-7	ELECTRICAL EQUIPMENT INSTL/WING ONLY/ALTERNATOR	NP	3
	96-361000	ELECTRICAL EQUIP INSTL,WING & ENGINE.	NP	4
	45-361115	. SWITCH INSTL,FLAP LIMIT	NP	5
	96-361013	. SWITCH INSTL,FLAP LIMIT	NP	6
	96-361011-15	. SWITCH INSTL,FLAP LIMIT	NP	7
	45-361116	. . SWITCH,FLAP LIMIT UP.	1	5
	45-361117	. . SWITCH,FLAP LIMIT DOWN.	1	5
	96-361013-601	. . SWITCH ASSY,FLAP LIMIT.	1	6
	96-361011-601	. . SWITCH ASSY,FLAP LIMIT.	1	7
		/SEE CHAPTER 27-50-30/		
	MS3108B12S3S	. CONNECTOR,OIL TEMPERATURE UNIT.	2	1
- 1	MS3106A12S3S	. CONNECTOR,OIL TEMPERATURE UNIT.	2	7
	MS3108B10SL3S	. CONNECTOR,TACHOMETER GENERATOR.	2	1
- 2	MS3106A10SL3S	. CONNECTOR,TACHOMETER GENERATOR.	2	7
		/ATTACHING PARTS/		
	MS3057-4A	. CLAMP,CABLE	1	
	MS3420-4	. BUSHING	1	
		----*----		
	R 35-361025-1	. STALL WARNING INSTL	NP	
	96-360002-13	. BUS BAR,ALTERNATOR.	2	10
- 3	58-361011-1	. BUS BAR,ALTERNATOR.	2	4
- 4	121P60501R5V1 OR	. CAPACITOR	2	9
	218P60501R5T1 OR	. CAPACITOR	2	9
	35-360011-5	. CAPACITOR/6MFD,150VDC/USE ONLY IF ABOVE . . .	2	9
		LISTED CAPACITORS ARE NOT AVAILABLE/		
		/ATTACHING PARTS/		
- 5	AN525-832R10	. SCREW	1	9
	AN520-10R8	. SCREW	1	9
	AN960-8L	. WASHER.	1	9
	AN935-10L	. WASHER.	1	9
- 6	AN742D12	. CLAMP	2	9
- 7	MS20365-832	. NUT	1	9
		----*----		
- 8	96-360002-15	. CLIP,CAPACITOR MOUNTING	1	9
- 9	SCMS-P	. BLOCK	18	
- 10	49296	. CLAMP,WIRE HARNESS.	18	
	MS18034-4	. TIE,WIRE HARNESS.	18	
	MS35489-4	. GROMMET	4	
	49245	. BAND,WIRE HARNESS	20	
	49169	. CLIP,SUPPORT.	20	
- 11	MS91586-2	. SHUNT	2	9
	MS91586-1	. SHUNT	2	11
- 12	4532	. BLOCK,FUSE.	2	12
	AGC5	. FUSE.	6	12
- 13	58-364029	. DECAL	2	12

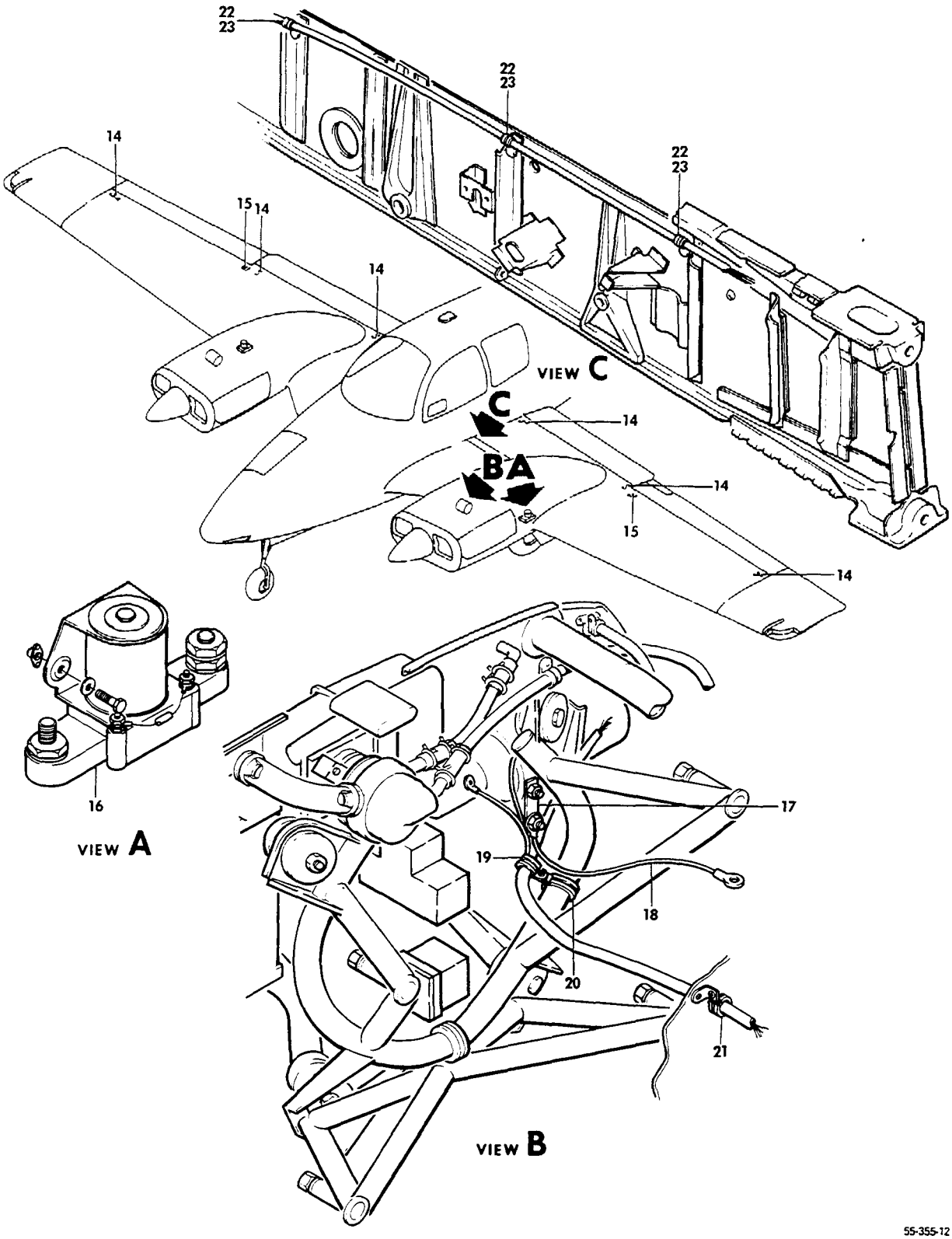

FIGURE 01-01.WING ELECTRICAL
/SHEET 2 OF 3 SHEETS/

ATA CODE & INDEX NO.	PART NO.	DESCRIPTION 1 2 3 4 5 6 7	UNITS PER ASSY	USABLE ON CODE
01-01 - 14	MS25083-1AA6	JUMPER,BONDING.	6	
- 15	MS25083-1AA8	JUMPER,BONDING.	6	
		/ATTACHING PARTS/		
	AN515-632	SCREW	2	
	AN960-6	WASHER.	2	
	MS20365-632	NUT	2	
- 16	6041H190	RELAY,STARTER	2	
		/ATTACHING PARTS/		
	AN4-11A	BOLT.	2	
	AN960-416	WASHER.	2	
	AN365-524	NUT	2	
	96-360002-11	CLIP,STARTER GROUNDING.	2	10
- 17	58-361012	CLIP,STARTER GROUNDING.	2	4
		/ATTACHING PARTS/		
	AN5-4A	BOLT.	1	
	AN960-516L	WASHER.	1	
	AN365-524	NUT	1	
	1E12G	JUMPER,BONDING/STARTER/	2	10
- 18	1F10G	JUMPER,BONDING/STARTER/	2	4
		/ATTACHING PARTS/		
	AN520-416R16	SCREW	1	
	AN936A416	WASHER.	1	
	AN916-416	WASHER.	2	
	AN935-416	WASHER.	1	
	AN315-4R	NUT	1	
	AN316-4R	NUT	1	
- 19	MS21919DG13	CLAMP,WIRE HARNESS.	2	
- 20	AN42D16	CLAMP,SUPPORT	2	
		/ATTACHING PARTS/		
	AN3	BOLT.	1	
	AN365-1032	NUT	1	
- 21	MS21919DG15	CLAMP,WIRE HARNESS.	2	
		/ATTACHING PARTS/		
	AN520-10R8	SCREW	1	
	AN960-10L	WASHER.	1	
	MS20365-1032C	NUT	1	
- 22	AN743-12	ANGLE,CLAMP SUPPORT	6	
- 23	MS21919G5	CLAMP,WIRE HARNESS.	6	
		/ATTACHING PARTS/		
	AN520-10R6	SCREW	2	
	AN960-10L	WASHER.	2	
	MS20365-1032	NUT	2	

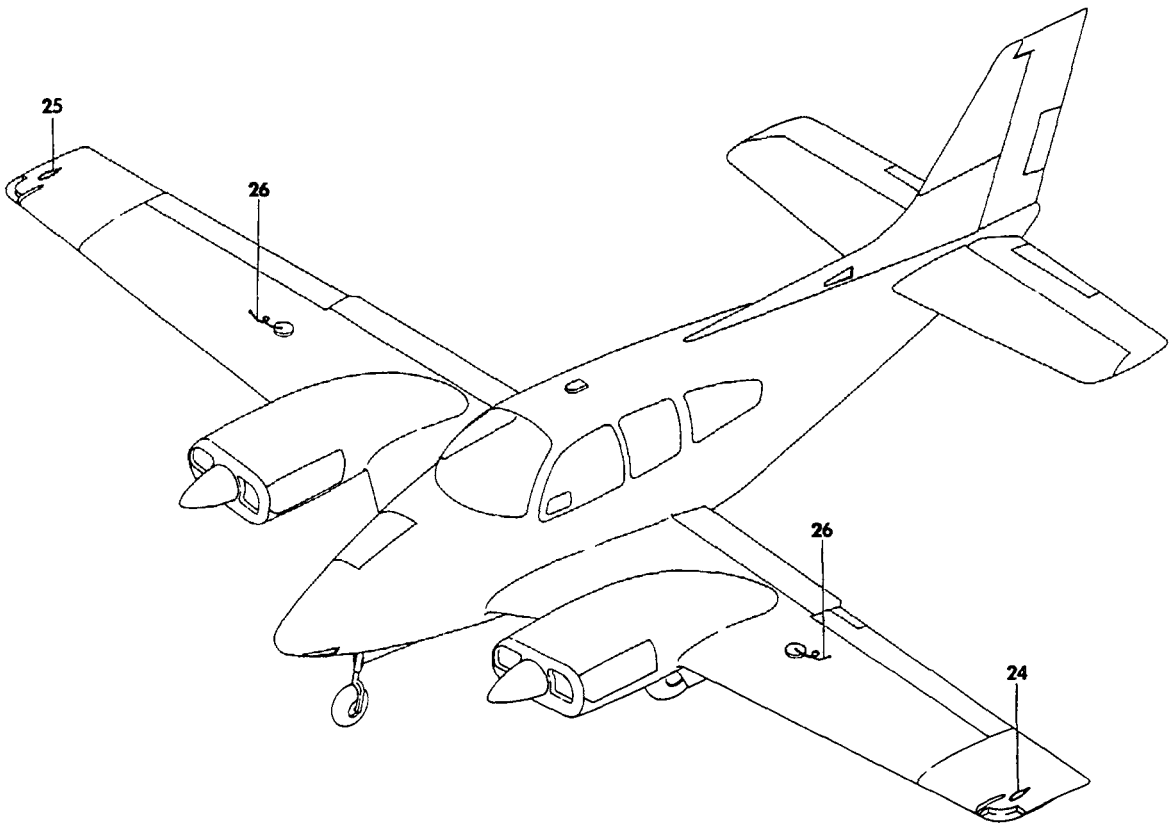

55-355-16

FIGURE 01-01.WING ELECTRICAL
/SHEET 3 OF 3 SHEETS/

SUB-SECT UNIT & ITEM NO.		PART NO.	DESCRIPTION 1 2 3 4 5 6 7	UNITS PER ASSY	USABLE ON CODE
01-01 - 24	R	B3307-1-1524	. LAMP ASSY,NAVIGATION/LH UPPER	1	8
- 25	R	B3307-3-1524	. LAMP ASSY,NAVIGATION/RH UPPER/.	1	8
	R	B3307-2-1524	. LAMP ASSY,NAVIGATION/LH LOWER/.	1	8
	R	B3307-4-1524	. LAMP ASSY,NAVIGATION/RH LOWER/.	1	8
			/ATTACHING PARTS/		
		AN526-632	. SCREW	3	
			——+——		
- 26		MS25083-1BA6	. JUMPER,BONDING/OUTBD FUEL TRANSMITTER/. . . .	2	
		AN507-632	. SCREW	1	
		AN960-6	. WASHER.	1	
		AN365-632	. NUT	1	
	R	96-360024	LIGHT INSTL,STROBE.	NP	13
		58-360028-3	LIGHT INSTL,STROBE/SEE CHAPTER 33/.	NP	14
		95-360012	POWER INSTL,EXTERNAL.	NP	

CODES OF EFFECTIVITY

1	TC-1 THRU TC-1607 EXCEPT TC-350,TC-763 TC-768,TC-770,TC-784 & TC-816	2	TC-763,TC-768,TC-770 TC-784 & TC-816
3	TC-350 & TE-1 THRU TE-767	4	TE-768 THRU TE-942 EXCEPT TE-938
5	TC-1 THRU TC-1056 EXCEPT TC-350	6	TC-1057 THRU TC-1607
7	TC-350 & TE-1 THRU TE-942 EXCEPT TE-938	8	TC-1 THRU TC-1298 & TE-1 THRU TE-767
9	TC-350,TC-763,TC-768 TC-770,TC-784,TC-816 & TE-1 THRU TE-942 EXCEPT TE-938	10	TC-350,TC-763,TC-768 TC-770,TC-784,TC-816 & TE-1 THRU TE-767
11	TC-1299 THRU TC-1607	12	TC-350,TC-763,TC-768 TC-770,TC-784,TC-816 TC-1299 THRU TC-1607 & TE-1 THRU TE-942 EXCEPT TE-938
13	TC-1299 THRU TC-1448 & TE-1 THRU TE-767	14	TC-1449 THRU TC-1607 TE-768 THRU TE-942 EXCEPT TE-938

24-30-01
ALTERNATOR
TC-350,TC-763,TC-768,TC-770,TC-784,TC-816
AND TE-1 THRU TE-942 EXCEPT TE-938

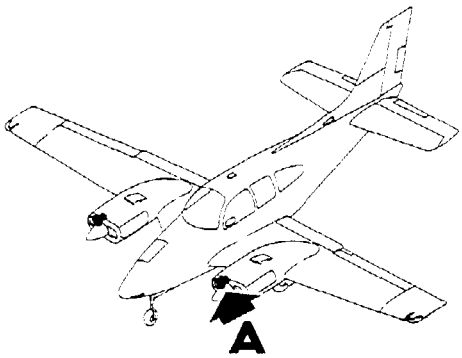

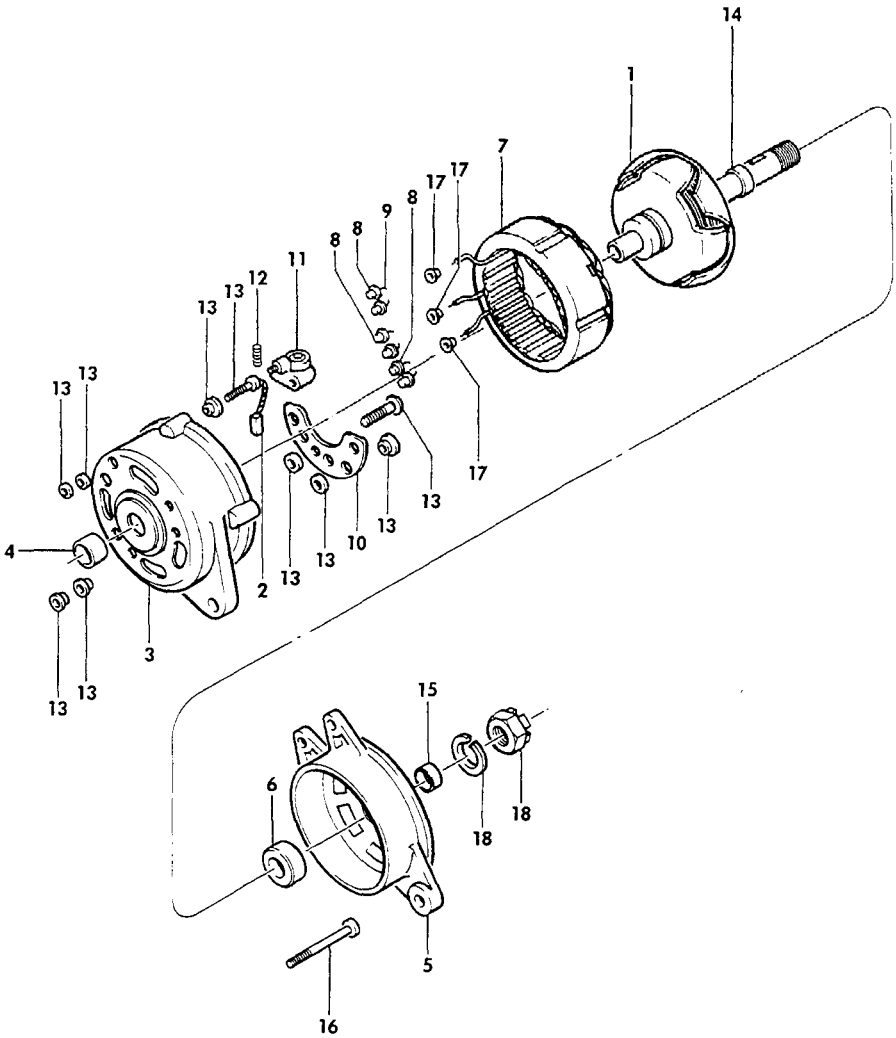

VIEW **A**

55-359-3

FIGURE 30-01. ALTERNATOR

ATA CODE & INDEX NO.	PART NO.	DESCRIPTION 1 2 3 4 5 6 7	UNITS PER ASSY	USABLE ON CODE
30-01	ALT9405	ALTERNATOR ASSY	2	1
- 1	ALU2038S1	. ROTOR ASSY.	1	1
- 2	ALE1012NS	. BRUSH SET	1	1
- 3	ALE1042AAS1	. HEAD ASSY,SLIP RING END	1	1
- 4	P90-201/A/	. BEARING,SLIP RING END	1	1
- 5	ALU1043/B/	. HEAD ASSY,DRIVE END	1	1
- 6	X4087	. . BEARING,DRIVE END	1	1
- 7	ALE2008AA	. STATOR ASSY	1	1
- 8	XA943F	. RECTIFIER /POSITIVE/.	1	1
- 9	XA944J	. RECTIFIER /NEGATIVE/.	1	1
- 10	ALE1054R	. PLATE ASSY,RECTIFIER.	1	1
- 11	ALU1045B	. HOLDER ASSY	1	1
- 12	ALA19AS	. SPRING SET,BRUSH.	1	1
- 13	P90-2043	. STUD PACKAGE,TERMINAL	1	1
- 14	GR32	. RETAINER,DRIVE END.	1	1
- 15	ALU23	. SPACER,ROTOR SHAFT.	1	1
	XA744AZ	. SEAL,ROTOR SHAFT SPACER	1	1
- 16	ALA20GS	. BOLT PACKAGE,THRU	1	1
- 17	P90-818	. EYELET PACKAGE.	1	1
- 18	8X4075/D/	. NUT & WASHER PACKAGE.	1	1

CODES OF EFFECTIVITY

1 TC-350,TC-763,TC-768
TC-770,TC-784,TC-816
TE-1 THRU TE-942
EXCEPT TE-938

"END"

24-30-10
GENERATOR /25 AMP/
TC-1 THRU TC-1607 EXCEPT TC-350,TC-763,TC-768,
TC-770,TC-784 AND TC-816

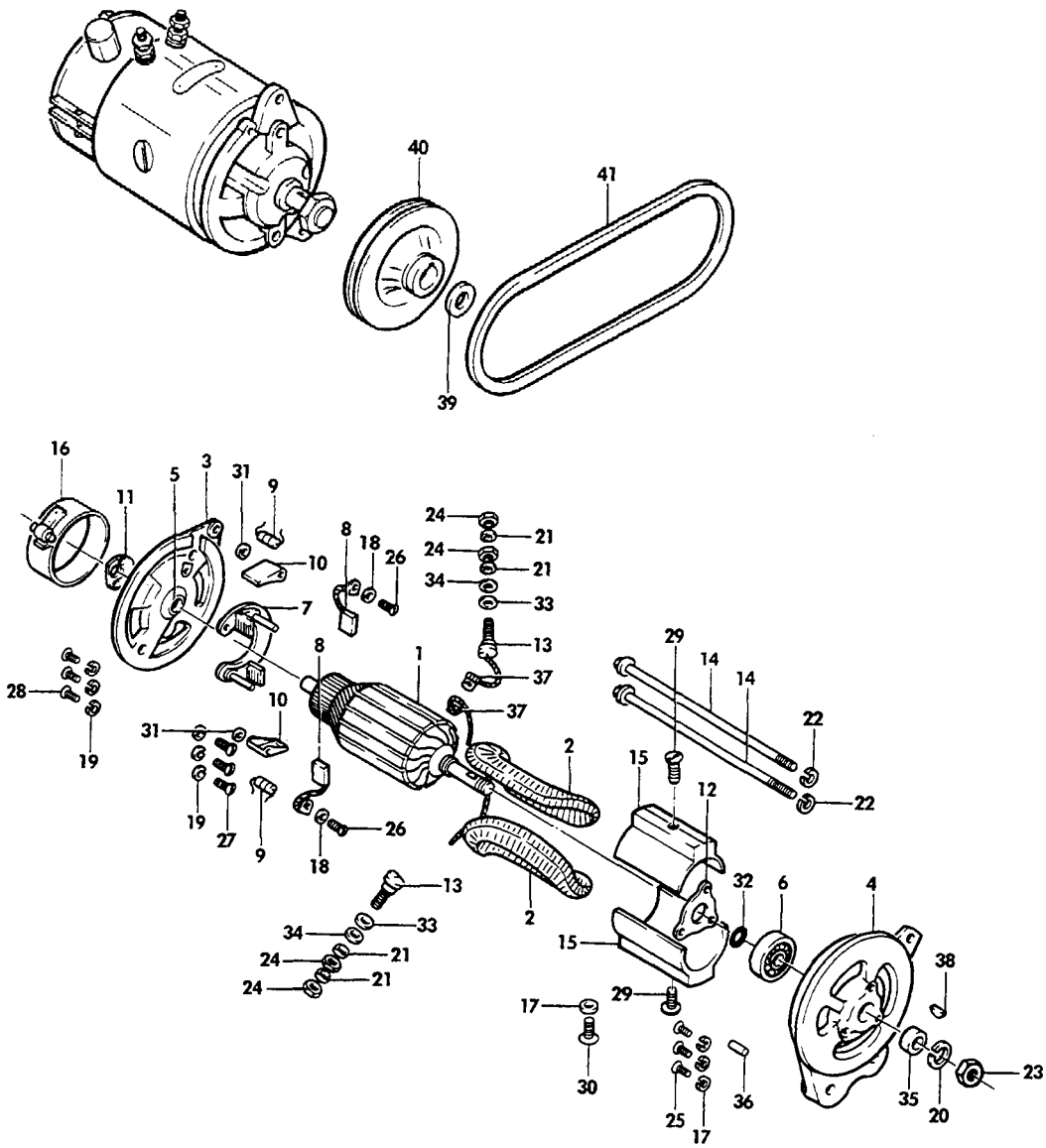

FIGURE 30-10. GENERATOR /25 AMP/

ATA CODE & INDEX NO.	PART NO.	DESCRIPTION 1 2 3 4 5 6 7	UNITS PER ASSY	USABLE ON CODE
30-10	1101911	GENERATOR /25 AMP/.	2	1
- 1	1930314	. ARMATURE.	1	1
- 2	1929703	. COIL,FIELD.	2	1
- 3	1943590	. FRAME ASSY,COMMUTATOR END	1	1
- 4	1925832	. FRAME,DRIVE END	1	1
- 5	954162	. BEARING,COMMUTATOR END BALL	1	1
- 6	954143	. BEARING,DRIVE END BALL.	1	1
- 7	1908999	. PLATE,BRUSH	1	1
- 8	1906984	. BRUSH	2	1
- 9	1903720	. SPRING,BRUSH.	2	1
- 10	1850759	. ARM,BRUSH	2	1
- 11	1943589	. PLATE,COMMUTATOR END COVER.	1	1
- 12	1927844	. PLATE,BEARING RETAINER.	1	1
- 13	1858749	. STUD.	1	1
- 14	1886685	. BOLT.	2	1
- 15	1939902	. SHOE,POLE	2	1
- 16	1910131	. BAND,COVER.	1	1
- 17	1914123	. WASHER.	4	1
- 18	131044	. WASHER.	2	1
- 19	453844	. WASHER.	6	1
- 20	1914978	. WASHER.	1	1
- 21	1914579	. WASHER.	4	1
- 22	9421424	. WASHER.	2	1
	453433	. NUT,COVER BAND SCREW.	1	1
- 23	1915172	. NUT	1	1
- 24	121743	. NUT	4	1
- 25	5017850	. SCREW	3	1
- 26	453460	. SCREW	2	1
- 27	454408	. SCREW	3	1
	132923	. SCREW,COVER BAND.	1	1
- 28	453418	. SCREW	3	1
- 29	1913960	. SCREW	2	1
- 30	132243	. SCREW	1	1
- 31	1857412	. WASHER.	2	1
- 32	809945	. WASHER.	1	1
- 33	1858753	. WASHER.	2	1
- 34	826319	. WASHER.	2	1
- 35	1861591	. COLLAR.	1	1
- 36	1886684	. PIN,DOWEL	1	1
- 37	200242	. CLIP,TERMINAL TO BRUSH LH	1	1
	200362	. CLIP,TERMINAL TO BRUSH RH	1	1
- 38	124545	. KEY,WOODRUFF.	1	1
- 39	536213	SPACER,GENERATOR PULLEY	2	1
- 40	627377	PULLEY,GENERATOR.	2	1
- 41	539547	BELT,GENERATOR DRIVE.	2	1

CODES OF EFFECTIVITY

1 TC-1 THRU TC-1607
EXCEPT TC-350,TC-763,
TC-768,TC-770,TC-784
AND TC-816

"END"

24-30-20
BATTERY INSTALLATION

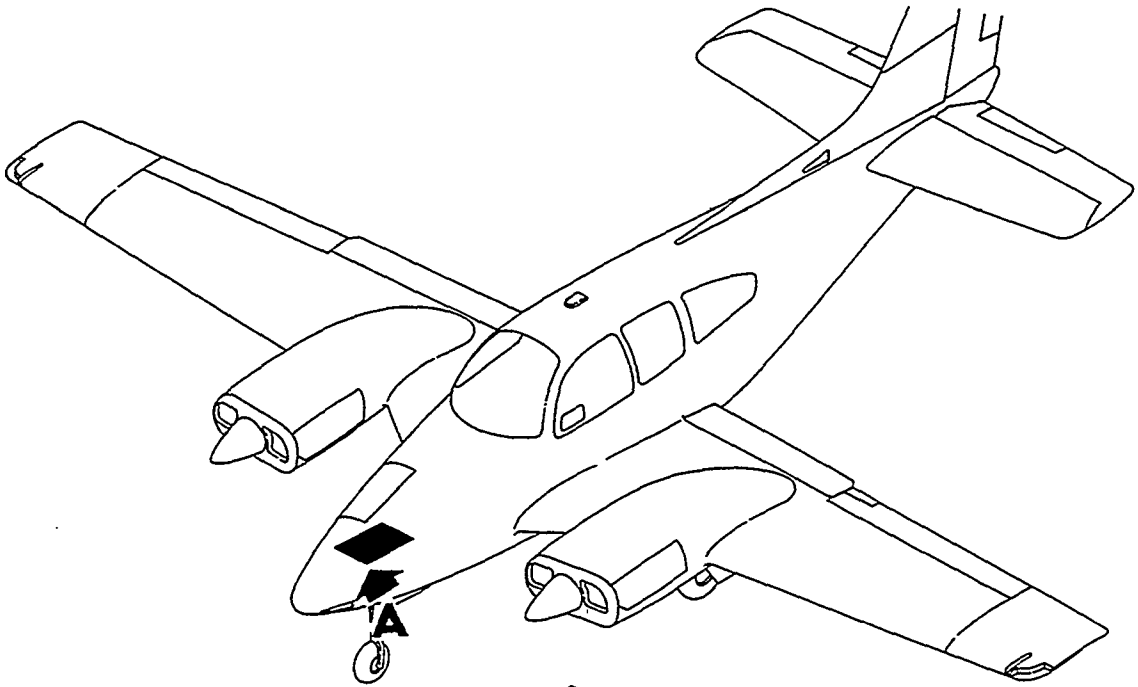

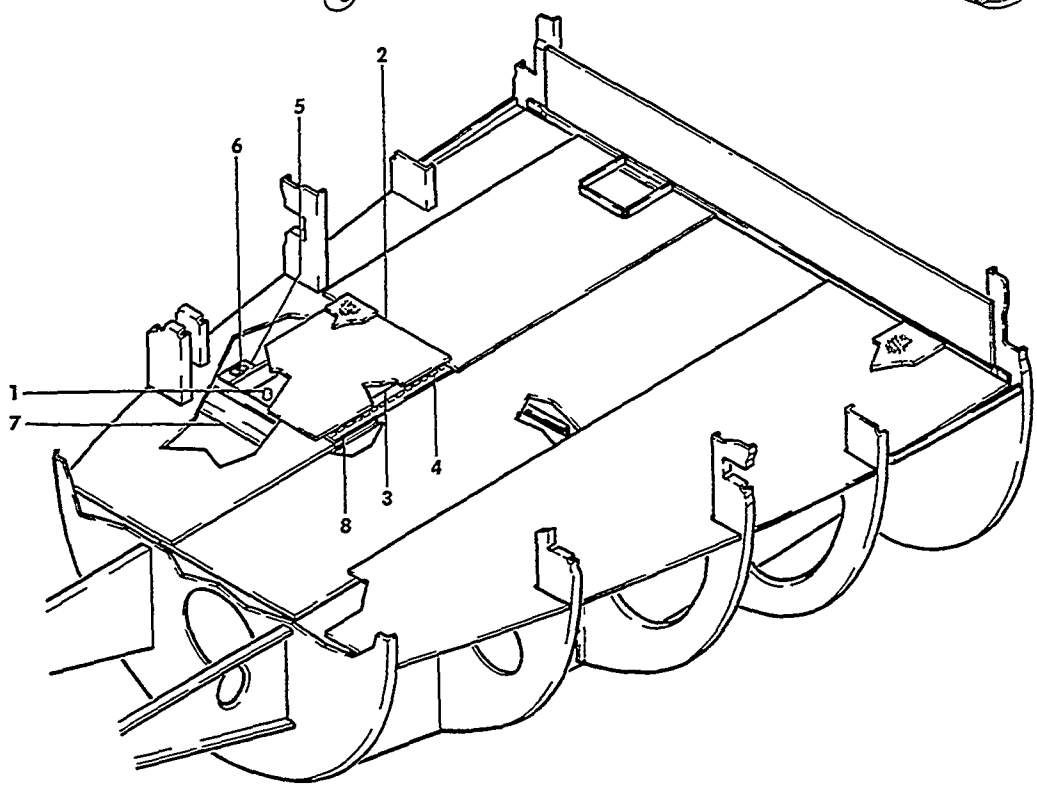

VIEW A

55-356-4

FIGURE 30-20.BATTERY INSTALLATION

ATA CODE & INDEX NO.	PART NO.	DESCRIPTION 1 2 3 4 5 6 7	UNITS PER ASSY	USABLE ON CODE
30-20	96-360000	ELECTRICAL EQUIPMENT INSTALLATION,FUSELAGE. . .	NP	1
	96-360002	ELECT EQUIPMENT INSTL,FUSELAGE.	NP	2
	96-364001	ELECT EQUIPMENT INSTL,FUSELAGE.	NP	3
- 1	58-380056-1	. BATTERY/12 VOLT,LEAD ACID/SP REPL FOR 118658.	2	
	118654	. BATTERY/24 VOLT,LEAD ACID/ALT FOR 58-380056-1	1	
	P22A2	. CABLE,BATTERY POSITIVE.	1	
	P22B2N	. CABLE,BATTERY GROUND.	1	
	95-361018	. SPACER.	1	
	96-364068-601	. LID,BATTERY ASSY.	1	
- 2	96-364068-1	. . LID,BATTERY BOX	1	
- 3	96-364068-11	. . HINGE,BATTERY BOX LID HALF.	1	
- 4	96-364068-5	. . PIN,HINGE	1	
	96-364068-7	. . SPACER.	2	
		/ATTACHING PARTS/		
	AN545-8R7	. . SCREW,WOOD.	4	
		——*——		
	96-364068-9	. . PAD	2	
	96-364068-3	. . GASKET,BATTERY BOX LID.	1	
	414-189412	. BUS BAR	1	
	96-410031	STRUCTURE ASSY,NOSE	NP	
	95-410006-19	. BOX ASSY,FUSELAGE NOSE BATTERY.	1	
- 5	95-410006-5	. BRACKET,BATTERY BOX DOOR SUPPORT.	1	
- 6	99871P098	. RECEPTACLE,FASTENER/BATTERY BOX DOOR/	1	
- 7	95-410006-9	. CHANNEL,BULKHEAD.	1	
- 8	95-410006-81	. HINGE,FUSELAGE HALF/BATTERY BOX DOOR/	1	

CODES OF EFFECTIVITY

1 TC-1 THRU TC-1607 EXCEPT TC-350,TC-763 TC-768,TC-770,TC-784 AND TC-816

2 TC-763,TC-768,TC-770 TC-784 & TC-816

3 TC-350 & TE-1 THRU TE-942 EXCEPT TE-938

"END"

24-40-01
EXTERNAL POWER RECEPTACLE

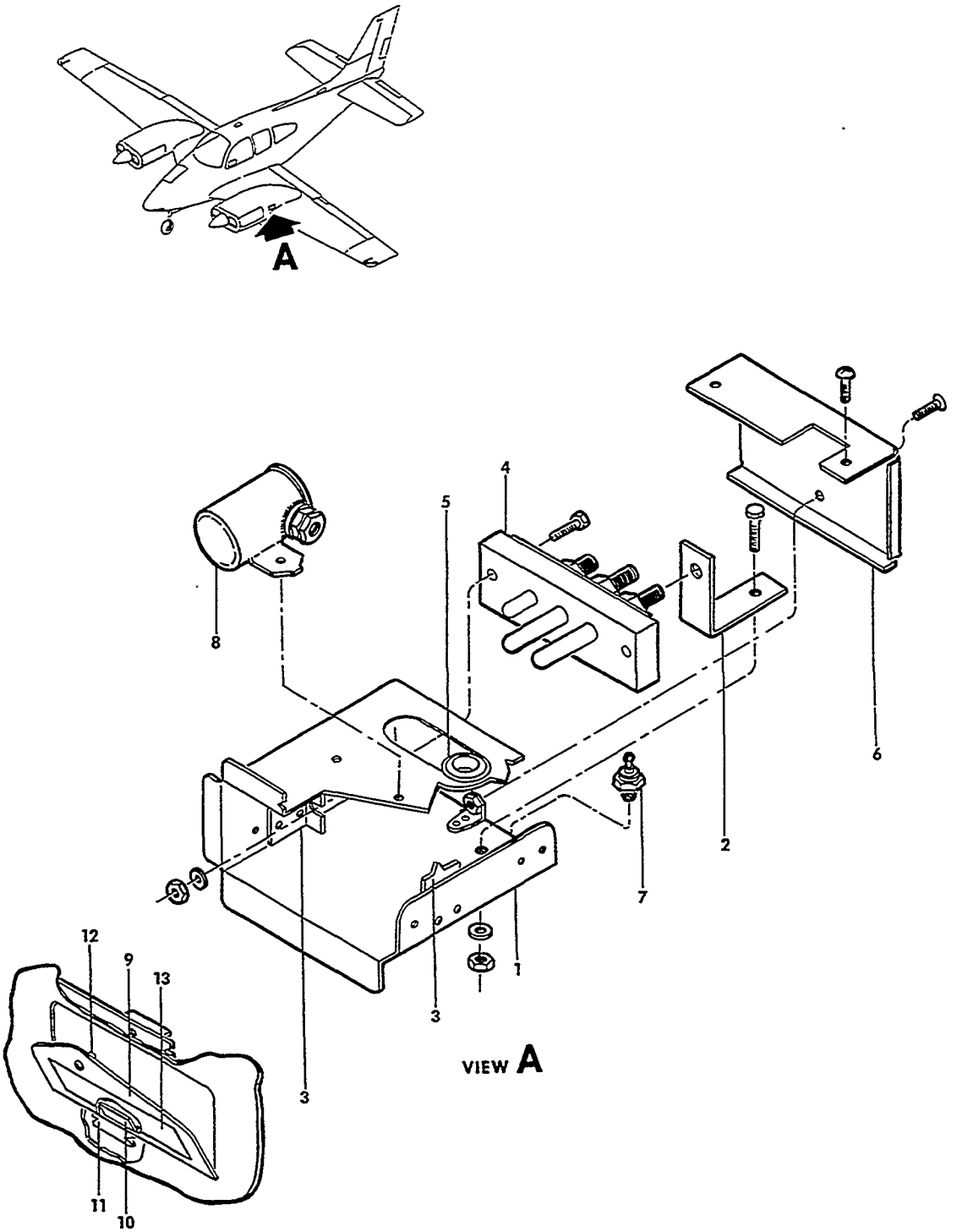

FIGURE 40-01.EXTERNAL POWER RECEPTACLE

ATA CODE & INDEX NO.	PART NO.	DESCRIPTION 1 2 3 4 5 6 7	UNITS PER ASSY	USABLE ON CODE
40-01	95-360012-611	EXTERNAL POWER RECEPTACLE ASSY.	1	1
	95-360012-613	EXTERNAL POWER RECEPTACLE ASSY.	1	2
	95-360012-608	. WIRE ASSY,EXTERNAL POWER.	1	1
	95-360012-607	. BOX ASSY,EXTERNAL POWER	1	
- 1	95-360012-25	. . BOX,EXTERNAL POWER.	1	
- 2	95-360012-15	. . BRACKET	1	
		/ATTACHING PARTS/		
	AN4-5	. . BOLT.	1	
	AN960-416	. . WASHER.	1	
	MS20364-428	. . NUT	1	
		----*----		
- 3	180963	. . BRACKET	2	
- 4	AN2552A3A	. . RECEPTACLE,EXTERNAL POWER	1	
		/ATTACHING PARTS/		
	AN3-7A	. . BOLT.	2	
	AN960-10	. . WASHER.	2	
	AN365-1032	. . NUT	2	
		----*----		
- 5	AN931-9-13	. . GROMMET	2	
- 6	180968	. . LID	1	
- 7	1N1343	. DIODE	1	
- 8	70-117224	. SOLENOID.	1	
		/ATTACHING PARTS/		
	MS35206-259	. SCREW/SUPERSEDES AN515-10R4/.	2	
	AN960-10L	. WASHER.	2	
		----*----		
	95-360012-23	DOOR ASSY,EXTERNAL POWER RECEPTACLE	1	
- 9	95-360012-17	. DOOR,EXTERNAL POWER	1	
	105774C-ZA00400	. PIN,HINGE	1	
- 10	95-360012-19	. HALF HINGE.	1	
- 11	95-360012-21	. HALF HINGE.	1	
- 12	A4-30	. FASTENER,DZUS	1	
	S4-225	. SPRING,DZUS FASTENER.	1	
- 13	112700	. PLACARD	1	

CODES OF EFFECTIVITY

1 TC-1 THRU TC-1607 EXCEPT TC-350

2 TC-350 & TE-1 THRU TE-942 EXCEPT TE-938

"END"

CHAPTER 25

EQUIPMENT/ FURNISHINGS

LIST OF PAGES & TABLE OF CONTENTS FOR CHAPTER 25-00-00 EQUIPMENT

CHAP/SUB-SECT & UNIT	PAGE NO.	EFFECTIVE DATE	TABLE OF CONTENTS
25-00-00	1	04/05/85	LIST OF PAGES & TABLE OF CONTENTS
25-00-00	2	04/05/85	
25-00-00	3	04/05/85	
25-00-00	4	04/05/85	
25-10-01	1	03/10/78	LOOSE TOOLS AND ACCESSORIES
25-10-01	2	04/30/84	
25-10-01	3	04/30/84	
25-10-01	4	04/30/84	
25-10-01	5	04/30/84	
25-10-01	6	04/30/84	
25-10-01	7	04/30/84	
25-13-01	1	03/10/78	PILOT AND COPILOT SEATS
25-13-01	2	03/10/78	TC-1 THRU TC-190
25-13-01	3	03/10/78	
25-13-10	1	03/10/78	PILOT AND COPILOT SEATS
25-13-10	2	03/10/78	TC-191 THRU TC-1298,TE-1 THRU TE-451
25-13-10	3	03/10/78	
25-13-10	4	03/10/78	
25-13-10	5	04/05/85	
25-13-10	6	03/10/78	
25-13-10	7	04/05/85	
25-13-20	1	03/10/78	PILOT AND COPILOT SEATS
25-13-20	2	03/10/78	TE-452 THRU TE-767
25-13-20	3	03/10/78	
25-13-20	4	03/10/78	
25-13-20	5	03/10/78	
25-13-20	6	03/10/78	
25-13-20	7	04/30/84	
25-13-30	1	03/10/78	PILOT AND COPILOT SEATS
25-13-30	2	03/10/78	TC-1299 THRU TC-1402,TE-768 THRU TE-846
25-13-30	3	03/10/78	
25-13-30	4	03/10/78	
25-13-30	5	03/10/78	
25-13-30	6	03/10/78	
25-13-30	7	03/10/78	
25-13-40	1	03/10/78	PILOT AND COPILOT SEATS
25-13-40	2	03/10/78	TC-1403 THRU TC-1607
25-13-40	3	03/10/78	TE-847 THRU TE-942 EXCEPT TE-938
25-13-40	4	03/10/78	
25-13-40	5	03/10/78	
25-13-40	6	03/10/78	
25-13-40	7	03/10/78	
25-16-01	1	03/10/78	GLARESHIELD INSTALLATION.
25-16-01	2	03/10/78	TC-1 THRU TC-190
25-16-01	3	03/10/78	
25-16-10	1	03/10/78	GLARESHIELD INSTALLATION.
25-16-10	2	03/10/78	TC-191 THRU TC-1042,TE-1 THRU TE-451
25-16-10	3	03/10/78	
25-16-20	1	03/10/78	GLARESHIELD INSTALLATION.
25-16-20	2	03/10/78	TC-1043 THRU TC-1402,TE-452 THRU TE-767
25-16-20	3	03/10/78	

LIST OF PAGES & TABLE OF CONTENTS
FOR
CHAPTER 25-00-00 EQUIPMENT

CHAP/SUB-SECT & UNIT	PAGE NO.	EFFECTIVE DATE	TABLE OF CONTENTS
25-16-30	1	03/10/78	GLARESHIELD INSTALLATION
25-16-30	2	03/10/78	TC-1403 THRU TC-1607
25-16-30	3	03/10/78	TE-768 THRU TE-942 EXCEPT TE-938
25-20-01	1	03/10/78	PASSENGER SEATS
25-20-01	2	03/10/78	TC-1 THRU TC-190
25-20-01	3	03/10/78	
25-20-01	4	03/10/78	
25-20-01	5	04/05/85	
25-20-10	1	03/10/78	PASSENGER SEATS
25-20-10	2	03/10/78	TC-191 THRU TC-1298,TE-1 THRU TE-451
25-20-10	3	04/05/85	
25-20-10	4	03/10/78	
25-20-10	5	03/10/78	
25-20-10	6	03/10/78	
25-20-10	7	03/10/78	
25-20-20	1	03/10/78	PASSENGER SEATS
25-20-20	2	03/10/78	TC-1299 THRU TC-1607
25-20-20	3	03/10/78	TE-452 THRU TE-942 EXCEPT TE-938
25-20-20	4	03/10/78	
25-20-20	5	03/10/78	
25-20-20	6	03/10/78	
25-20-20	7	03/10/78	
25-20-20	8	03/10/78	
25-20-20	9	03/10/78	
25-21-01	1	03/10/78	FIFTH SEAT
25-21-01	2	03/10/78	TC-1 THRU TC-640
25-21-01	3	03/10/78	
25-21-10	1	03/10/78	FOLDING FIFTH AND SIXTH SEAT
25-21-10	2	03/10/78	TC-238 THRU TC-640
25-21-10	3	03/10/78	
25-21-20	1	03/10/78	SEATS,SPECIAL
25-21-20	2	03/10/78	TC-641 THRU TC-1298,TE-1 THRU TE-767
25-21-20	3	03/10/78	
25-21-20	4	03/10/78	
25-21-20	5	03/10/78	
25-21-30	1	03/10/78	SEATS,SPECIAL
25-21-30	2	03/10/78	TC-1299 THRU TC-1607
25-21-30	3	03/10/78	TE-768 THRU TE-942 EXCEPT TE-938
25-21-30	4	03/10/78	
25-21-30	5	03/10/78	
25-22-01	1	03/10/78	CABIN UPHOLSTERY
25-22-01	2	03/10/78	TE-1 THRU TE-451
25-22-01	3	03/10/78	
25-22-01	4	03/10/78	
25-22-01	5	04/05/85	
25-22-01	6	03/10/78	
25-22-01	7	03/10/78	
25-22-01	8	03/10/78	
25-22-01	9	04/05/85	
25-22-02	1	03/10/78	CABIN UPHOLSTERY
25-22-02	2	03/10/78	TC-1 THRU TC-190
25-22-02	3	03/10/78	
25-22-02	4	03/10/78	
25-22-02	5	04/05/85	

LIST OF PAGES & TABLE OF CONTENTS
FOR
CHAPTER 25-00-00 EQUIPMENT

CHAP/SUB-SECT & UNIT	PAGE NO.	EFFECTIVE DATE	TABLE OF CONTENTS
25-22-03	1	03/10/78	CABIN UPHOLSTERY
25-22-03	2	03/10/78	TC-191 THRU TC-1607
25-22-03	3	04/05/85	
25-22-03	4	03/10/78	
25-22-03	5	03/10/78	
25-22-03	6	03/10/78	
25-22-03	7	04/05/85	
25-22-03	8	03/10/78	
25-22-03	9	04/05/85	
25-22-05	1	03/10/78	CABIN UPHOLSTERY
25-22-05	2	03/10/78	TE-452 THRU TE-767
25-22-05	3	03/10/78	
25-22-05	4	03/10/78	
25-22-05	5	03/10/78	
25-22-05	6	03/10/78	
25-22-05	7	03/10/78	
25-22-05	8	03/10/78	
25-22-05	9	03/10/78	
25-22-05	10	03/10/78	
25-22-05	11	03/10/78	
25-22-07	1	03/10/78	CABIN UPHOLSTERY
25-22-07	2	03/10/78	TE-768 THRU TE-942 EXCEPT TE-938
25-22-07	3	03/10/78	
25-22-07	4	03/10/78	
25-22-07	5	04/05/85	
25-23-01	1	03/10/78	CABIN FURNISHING/MISCELLANEOUS/
25-23-01	2	03/10/78	
25-23-01	3	03/10/78	
25-23-01	4	03/10/78	
25-23-01	5	03/10/78	
25-23-01	6	03/10/78	
25-23-01	7	03/10/78	
25-23-01	8	03/10/78	
25-23-01	9	03/10/78	
25-23-01	10	03/10/78	
25-23-01	11	03/10/78	
25-23-01	12	04/05/85	
25-23-01	13	04/05/85	
25-23-01	14	03/10/78	
25-23-01	15	04/05/85	
25-23-01	16	03/10/78	
25-23-01	17	03/10/78	
25-23-01	18	03/10/78	
25-23-01	19	03/10/78	
25-23-01	20	03/10/78	
25-23-01	21	04/05/85	
25-28-01	1	03/10/78	CARPET AND SPAR COVERS
25-28-01	2	03/10/78	TC-1 THRU TC-190
25-28-01	3	04/05/85	
25-28-10	1	03/10/78	CARPET AND SPAR COVERS
25-28-10	2	03/10/78	TC-191 THRU TC-1402,TE-1 THRU TE-767
25-28-10	3	04/05/85	
25-28-20	1	03/10/78	CARPET AND SPAR COVERS
25-28-20	2	03/10/78	TC-1403 THRU TC-1607
25-28-20	3	04/05/85	TE-768 THRU TE-942 EXCEPT TE-938

LIST OF PAGES & TABLE OF CONTENTS
FOR
CHAPTER 25-00-00 EQUIPMENT

CHAP/SUB-SECT & UNIT	PAGE NO.	EFFECTIVE DATE	TABLE OF CONTENTS
25-50-01	1	03/10/78	BAGGAGE WEBBING INSTALLATION
25-50-01	2	03/10/78	
25-50-01	3	03/10/78	
25-60-01	1	03/10/78	EMERGENCY LOCATOR TRANSMITTER
25-60-01	2	03/10/78	
25-60-01	3	03/10/78	

25-10-01
LOOSE TOOLS AND ACCESSORIES

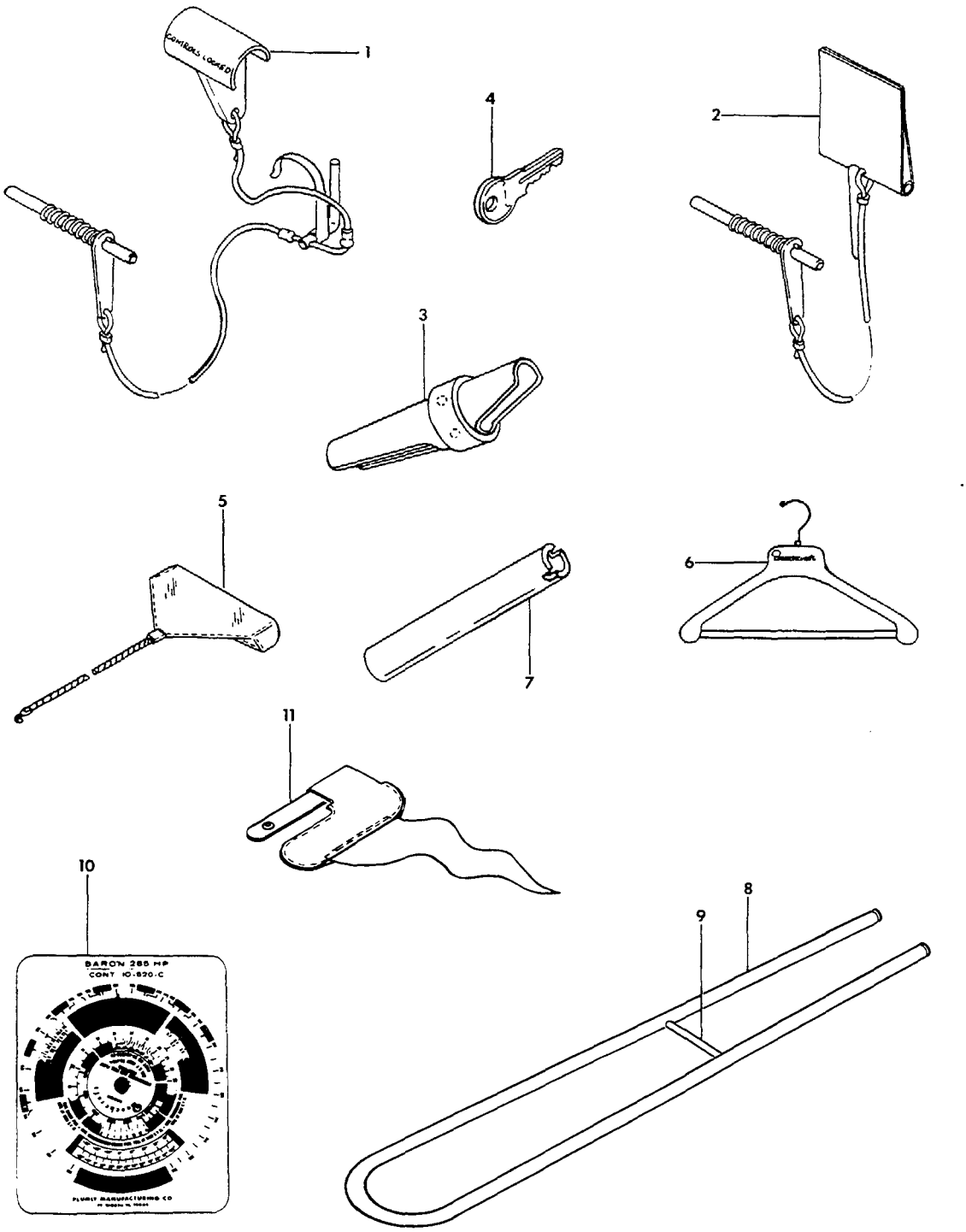

FIGURE 10-01.LOOSE TOOLS AND ACCESSORIES
/SHEET 1 OF 3 SHEETS/

SUB-SECT UNIT & ITEM NO.		PART NO.	DESCRIPTION 1 2 3 4 5 6 7	UNITS PER ASSY	USABLE ON CODE
10-01		96-590000	LOOSE TOOLS AND ACCESSORIES INSTL	NP	1
		96-590011	LOOSE TOOLS AND ACCESSORIES INSTL	NP	2
		55-590006	LOOSE TOOLS AND ACCESSORIES INSTL	NP	3
		96-590004	LOOSE TOOLS AND ACCESSORIES INSTL	NP	4
		96-590010	LOOSE TOOLS AND ACCESSORIES INSTL	NP	5
-	1	R 95-590031	. LOCK ASSY,CONTROL SURFACE & THROTTLE.	1	6
-	2	R 58-590016-19	. LOCK ASSY,CONTROL SURFACE & THROTTLE.	1	7
			/SEE 27-70-01 FOR BREAKDOWN/		
-	3	R 35-590006	. ADAPTER ASSY,MAIN WHEEL JACK.	1	
		R 202095	. LIGHTER,ELEMENT & KNOB.	1	8
		R 35-364160-3	. LIGHTER,ELEMENT & KNOB.	1	5
-	4	R 130066-1	. KEYS/2 BLANK KEYS & RING,BLUE & GOLD/	1	
		R EB1019B10R	. KEY,BRASS/BLANK/.	1	
		R EF5-1	. BOOK,ENGINE LOG	1	
		R AF5-1	. BOOK,AIRPLANE LOG	1	
-	5	R 96-590019-5	. COVER ASSY,AIRSCOOP/INDUCTION/.	2	
-	6	R 35-590058	. HANGER,CLOTHING/BLACK/.	1	9
-	7	R 50-590106	. WRENCH,SUMP DRAIN	1	9
		R 24C54	. MANUAL,11C30 IGNITOR ASSY	1	
		R 30C57	. MANUAL,D83A28 HEATER ASSY	1	
		R 36-590015-1	. HANDLE ASSY,TOW	1	
-	8	R 36-590015-3	. . TUBE ASSY	1	
-	9	R 36-590015-9	. . SPACER.	1	
		R AN3-51A	. . BOLT.	1	
		R AN960PD10	. . WASHER.	1	
		R MS21042-3	. . NUT	1	
		R 55-590000-23	. CALCULATOR,HORSEPOWER	1	10
		R 55-590000-57	. CALCULATOR,HORSEPOWER	1	11
		R 55-590004	. CALCULATOR,HORSEPOWER	1	12
-	10	R 55-590004-1	. CALCULATOR,HORSEPOWER	1	5
		R 55-590000-65B	. PILOTS OPERATING HANDBOOK	1	13
		R 96-590011-25	. PILOTS OPERATING HANDBOOK	1	14
		R 96-590010-29B	. PILOTS OPERATING HANDBOOK	1	15
		R 55-590000	. KIT,SERVICE INFORMATION	NP	8
		R 130776	. . FAA FLIGHT MANUAL SUPPLEMENT/MINIMUM FUEL/.	1	8
-	11	R OPHP1	. COVER ASSY,PITOT TUBE	1	

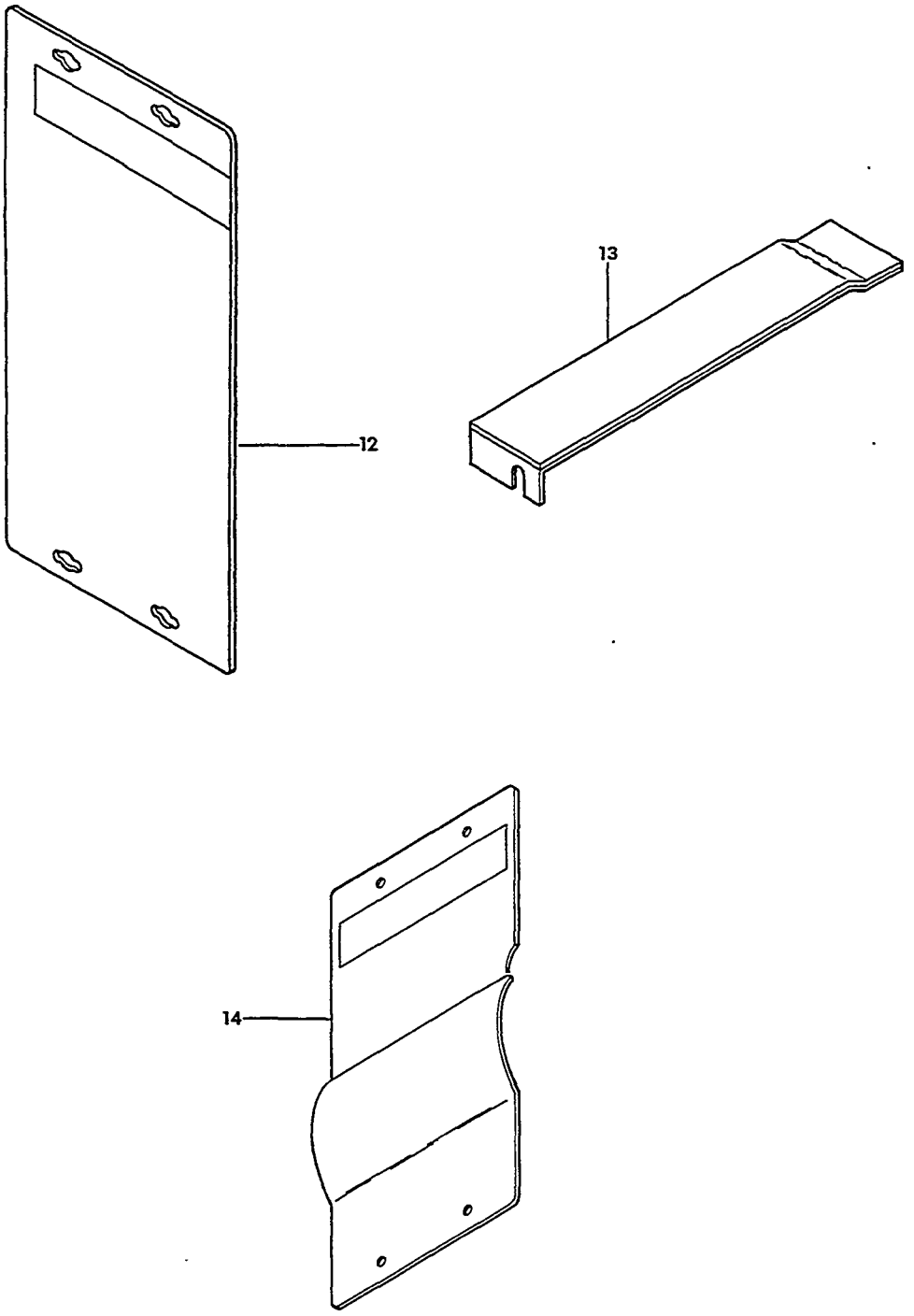

FIGURE 10-01.LOOSE TOOLS AND ACCESSORIES
/SHEET 2 OF 3 SHEETS/

SUB-SECT UNIT & ITEM NO.	PART NO.	DESCRIPTION 1 2 3 4 5 6 7	UNITS PER ASSY	USABLE ON CODE
10-01	R R-903	. FLIGHT BAG/SUPERSEDES A903/	1	
	R 55-590000-13	. MANUAL,SHOP/OPTIONAL/	1	
	R 96-590010-13	. CATALOG,PARTS/OPTIONAL/	1	
		SUPERSEDES 55-590000-15 & 58-590000-5/		
	R 118662	. FORM,100 HOUR INSPECTION/OPTIONAL/.	1	
	R 98-34350	. MANUAL,H14 AUTOPILOT OPERATORS.	1	
	R 130332	. OPERATING INST,DYNERTIAL PITCH CONTROL. . . .	1	
	R 130376	. AUTOPILOT OPERATING INSTRUCTIONS,B4 NEW-MATIC	1	8
	R 113667	. DIRECTORY,BEECHCRAFT SERVICE FACILITIES . . .	1	
	R 98-32176	. CARD,OWNER NOTIFICATION	1	
	R 96-910017	. BAFFLE INSTL,NOSE COWL.	NP	16
	R 96-910017-15	. BAFFLE INSTL,NOSE COWL.	NP	17
	R 96-910017-1	. . BAFFLE ASSY,NOSE COWL	4	18
		/ATTACHING PARTS/		
	R AN525-10-7	. . SCREW	4	
	R NAS697A3	. . NUTPLATE.	4	
		----*----		
- 12	R 96-910017-7	. . . WELD ASSY	1	18
	R 35-590080	. . . PLACARD/WHEN TO REMOVE BAFFLE/.	1	18
	R 96-910018	. . PLACARD/WHEN TO REMOVE BAFFLE/.	1	18
		/FUEL SELECTOR PANEL/		
- 13	R 96-910017-9	. . BAFFLE ASSY,OIL COOLER.	2	16
	R 35-590080	. . . PLACARD/WHEN TO REMOVE BAFFLE/.	1	17
	R 96-910034-15	. BAFFLE INSTL,NOSE COWL.	NP	19
		/SUPERSEDES 96-910034-7 & 96-910034-13/		
- 14	R 96-910034-17 C	. . BAFFLE ASSY,NOSE COWL	4	19
		/ATTACHING PARTS/		
	R MS27039-1-07	. . SCREW	4	
	R 96-910034-21	. . WASHER.	8	
	R MS21069L3	. . NUTPLATE.	4	
		----*----		
	R 96-910037-1	. . . PLACARD/WHEN TO REMOVE BAFFLE/.	1	19
	R 96-910048-3	. . . DECAL,INSTRUCTION/WASHER INSTL/	1	19
	R 96-910038-1	. . DECAL/WHEN TO REMOVE BAFFLE/.	1	19
		/FUEL SELECTOR PANEL/		

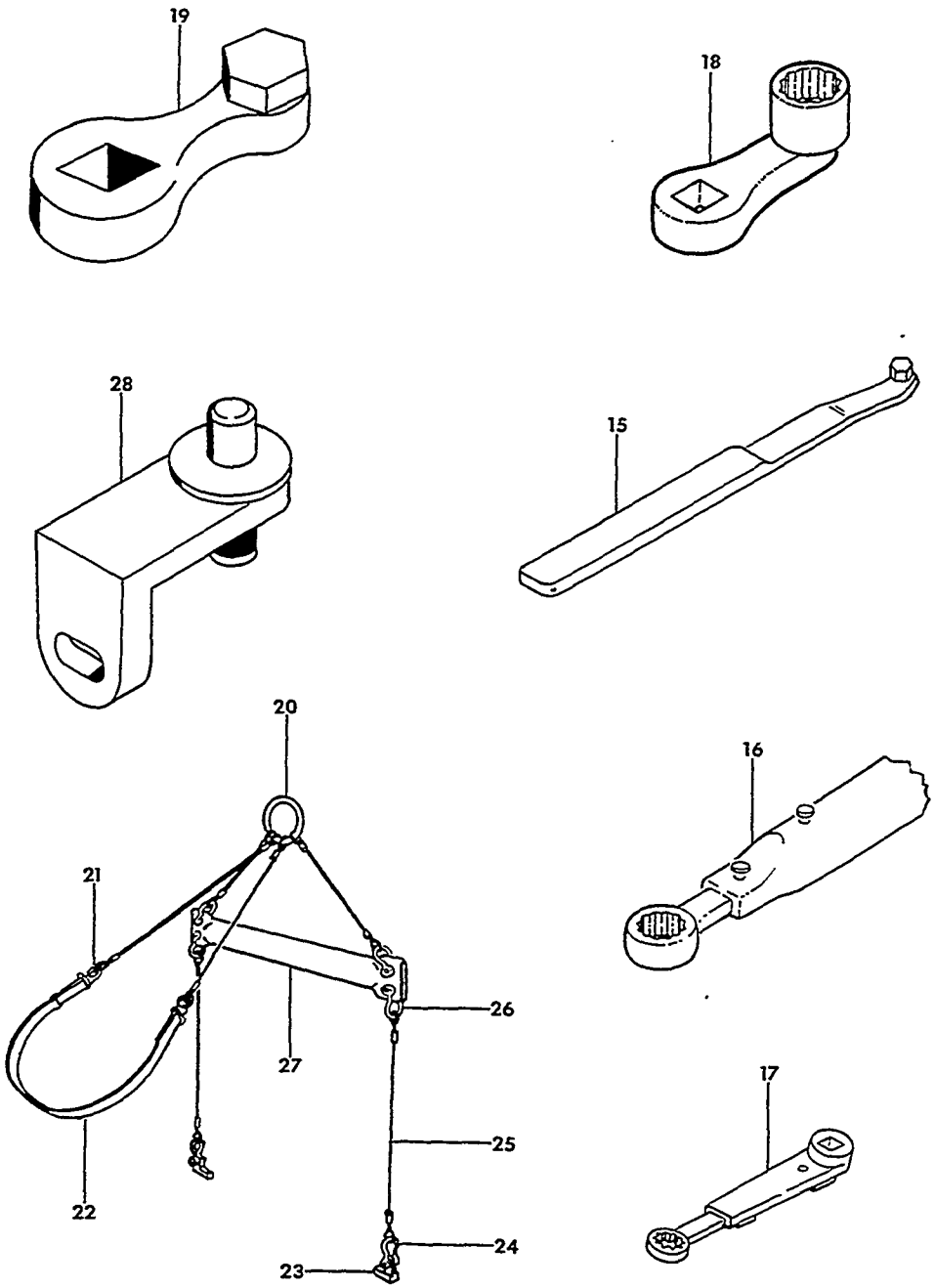

FIGURE 10-01.LOOSE TOOLS AND ACCESSORIES
/SHEET 3 OF 3 SHEETS/

SUB-SECT UNIT & ITEM NO.		PART NO.	DESCRIPTION 1 2 3 4 5 6 7	UNITS PER ASSY	USABLE ON CODE
10-01		96-590001	LOOSE TOOLS & ACCESSORIES INSTL/OPTIONAL/ . . .	NP	9
- 15	R	TS1222-3	. WRENCH/5/8 HEX/,UPR FWD & LWR FWD WING BOLT .	1	9
	R	TS1222-4	. WRENCH/9/16 HEX/,UPR FWD & UPR AFT WING BOLT.	1	9
- 16	R	TK1817-922-4	. WRENCH,LWR AFT WING BOLT.	1	9
- 17	R	50-590014	. ADAPTER,LWR FWD WING NUT TORQUE WRENCH. . . .	1	9
- 18	R	TS1176-10	. ADAPTER,LWR AFT WING NUT TORQUE WRENCH. . . . /EXTERNAL WRENCHING/	1	9
- 19	R	TS1171-2	. ADAPTER,UPR FWD & LWR AFT WING NUT TORQUE . . WRENCH/INTERNAL WRENCHING/	1	9
	R	50-590013	. ADAPTER,UPR AFT WING NUT TORQUE WRENCH. . . . /SUPERSEDES TS1171-1/	1	9
	R	95-590016-27	. SLING ASSY,AIRPLANE HOISTING.	1	
- 20	R	95-590016-21	. . SUPPORT ASSY.	1	
- 21	R	AN116-5	. . SHACKLE,ANCHOR.	2	
- 22	R	95-590016-17	. . STRAP ASSY.	1	
- 23	R	95-590017	. . ADAPTER/WITH WING ATTACHED/	2	
	R	95-590017-1	. . ADAPTER/WITH WING REMOVED/.	2	
	R	95-590016-23	. . SPACER/WITH WING REMOVED/	2	
- 24	R	AN116-8	. . SHACKLE,ANCHOR.	2	
- 25	R	95-590016-13	. . CABLE ASSY.	2	
- 26	R	AN116-7	. . SHACKLE,ANCHOR.	4	
- 27	R	95-590016-9	. . SPREADER.	1	
- 28	R	TK-1518	. ADAPTER,SERVICE JACK HANDLE	1	
	R	TK-1521	. WRENCH,INSTRUMENT POST LIGHT.	1	8

CODES OF EFFECTIVITY

1	TC-1 THRU TC-1402	2	TC-1403 THRU TC-1607
3	TE-1 THRU TE-451	4	TE-452 THRU TE-767
5	TE-768 THRU TE-937, TE-939 THRU TE-942	6	TC-1 THRU TC-1436 TE-1 THRU TE-859
7	TC-1437 THRU TC-1607 TE-860 THRU TE-937, TE-939 THRU TE-942	8	TC-1 THRU TC-1607 TE-1 THRU TE-767
9	TC-1 THRU TC-1373 TE-1 THRU TE-830	10	TC-110 THRU TC-954
11	TC-955 THRU TC-1607	12	TE-1 THRU TE-767
13	TC-1 THRU TC-349, TC-351 THRU TC-370, TC-372 THRU TC-501	14	TC-371, TC-502 THRU TC-1607
15	TC-350 ONLY TE-1 THRU TE-937, TE-939 THRU TE-942	16	TC-1 THRU TC-280
17	TC-281 THRU TC-1607	18	TC-1 THRU TC-1607
19	TE-1 THRU TE-937, TE-939 THRU TE-942		

25-13-01
PILOT AND COPILOT SEATS
TC-1 THRU TC-190

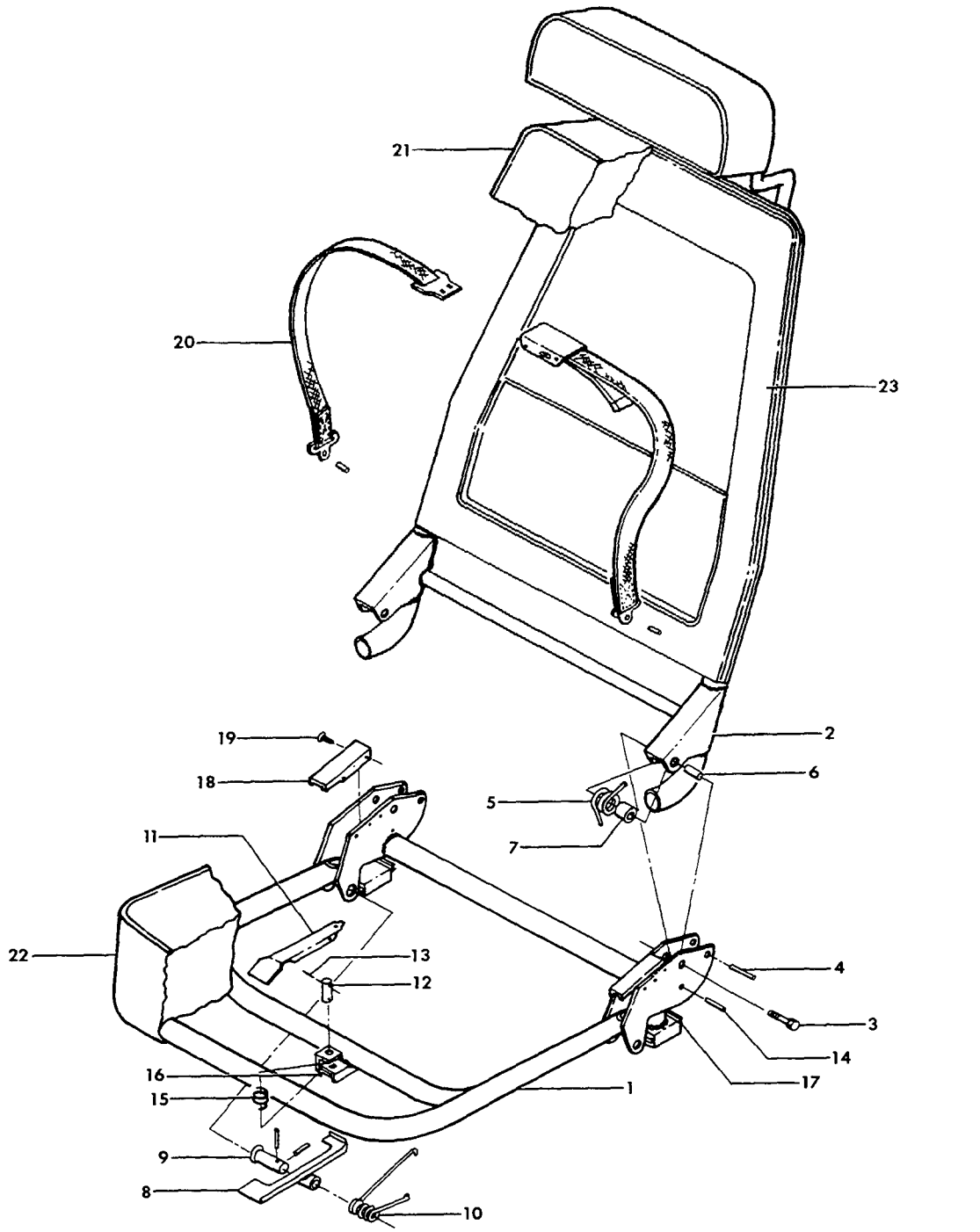

FIGURE 13-01.PILOT AND COPILOT SEATS

ATA CODE & INDEX NO.	PART NO.	DESCRIPTION 1 2 3 4 5 6 7	UNITS PER ASSY	USABLE ON CODE
13-01	96-530001-634	SEAT ASSY,PILOTS.	1	1
	96-530001-635	SEAT ASSY,COPILOTS.	1	1
	96-530001-610	SEAT ASSY,UPHOLSTERED LH.	1	1
	96-530001-611	SEAT ASSY,UPHOLSTERED RH.	1	1
	95-534017-601	. STRUCTURE ASSY,PILOTS SEAT.	1	1
	95-534017-602	. STRUCTURE ASSY,COPILOT SEAT	1	1
- 1	95-534017-29	. . WELD ASSY,SEAT BOTTOM	1	1
- 2	95-534018-69	. . WELD ASSY,SEAT BACK	1	1
		/ATTACHING PARTS/		
- 3	AN24-28A	. . BOLT.	2	
- 4	MS20392-2-37	. . PIN/SUPERSEDES AN393-37/.	2	
- 5	95-534019-1	. . SPRING,FRONT SEAT RECLINING	2	
	AN960-416L	. . WASHER.	2	
- 6	100801X6-1060	. . SPACER.	2	
	AN380-2-2	. . PIN,COTTER.	2	
	AN365-428	. . NUT	2	
		——*——		
- 7	95-534017-27	. . SPACER,PHENOLIC	2	1
- 8	95-534017-37	. . HANDLE ASSY,LH FRONT SEAT	1	1
	95-534017-38	. . HANDLE ASSY,RH FRONT SEAT REAR.	1	1
		/ATTACHING PARTS/		
- 9	MS20392-5-69	. . PIN	1	
	AN960-616L	. . WASHER.	1	
	AN380-3-3	. . PIN,COTTER.	1	
		——*——		
- 10	95-534023-1	. . SPRING,LH FRONT SEAT.	1	1
	95-534023	. . SPRING,RH FRONT SEAT.	1	1
- 11	95-534017-5	. . HANDLE,FRONT SEAT FWD	1	1
- 12	33-534010-33	. . PIN,FWD HANDLE.	1	1
- 13	19-022-094-0650	. . PIN,ROLL.	2	1
- 14	52-032-156-1120	. . PIN,ROLL.	1	1
- 15	111504ZM0020-8	. . SPRING.	1	1
- 16	95-534017-9	. . SLIDE,SEAT TRACK.	1	1
- 17	95-534017-31	. . SLIDE,SEAT TRACK.	2	1
- 18	50-534430	. CAP,CHAIR CLOSURE	2	1
		/ATTACHING PARTS/		
- 19	PK65A4-6	. SCREW	3	
		——*——		
- 20	95-534017-35	. BELT ASSY,SEAT.	1	1
		/ATTACHING PARTS/		
	AN4-5A	. BOLT.	2	
	102933D5ZM0190	. SPACER.	2	
	AN936B416	. WASHER.	2	
		——*——		
- 21	96-530001-95	. CUSHION ASSY,SEAT BACK/PILOT & COPILOT/	1	1
	AN227-6B	. BUTTON.	10	1
	AN227-7B	. SOCKET.	10	1
- 22	96-530001-99	. CUSHION ASSY,SEAT BOTTOM/PILOT & COPILOT/	1	1
	AN230682	. GROMMET	1	1
	AN230WB2	. GROMMET	1	1
- 23	96-534010-601	PANEL,SEAT BACK/BLUE,USED WITHOUT CARD TABLE/	2	1
	96-534010-602	PANEL,SEAT BACK/GRAY,USED WITHOUT CARD TABLE/	2	1
	96-534010-603	PANEL,SEAT BACK/BEIGE,USED WITHOUT CARD TABLE/.	2	1
	96-534010-604	PANEL,SEAT BACK/GREEN,USED WITHOUT CARD TABLE/.	2	1
	96-530012-601	PANEL,SEAT BACK/BLUE,USED WITH CARD TABLE/.	2	1
	96-530012-602	PANEL,SEAT BACK/GRAY,USED WITH CARD TABLE/.	2	1
	96-530012-603	PANEL,SEAT BACK/BEIGE,USED WITH CARD TABLE/	2	1
	96-530012-604	PANEL,SEAT BACK/GREEN,USED WITH CARD TABLE/	2	1

CODES OF EFFECTIVITY

1 TC-1 THRU TC-190

"END"

25-13-10
PILOT AND COPILOT SEATS
TC-191 THRU TC-1298,TE-1 THRU TE-451

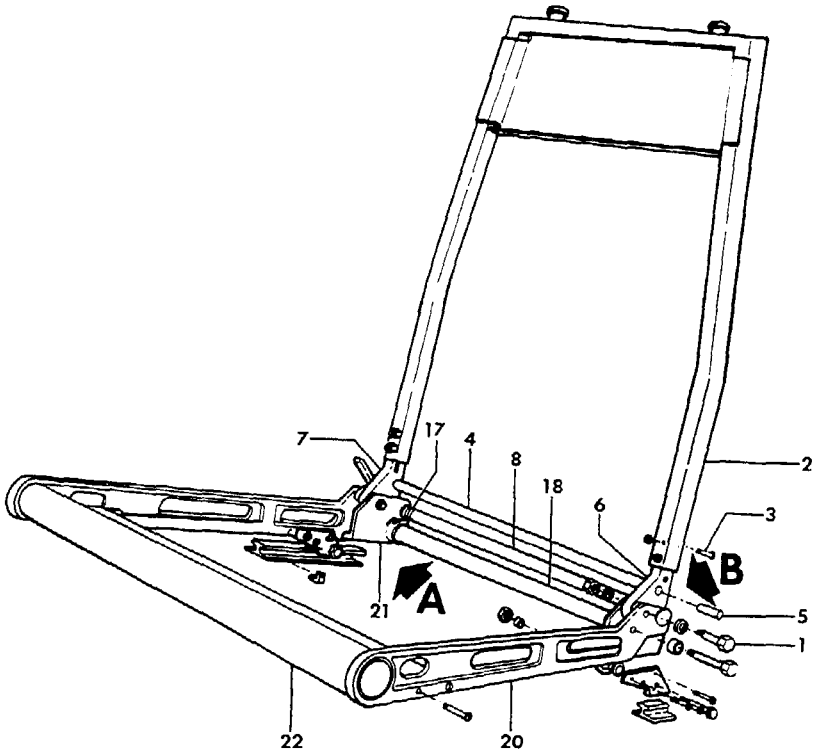

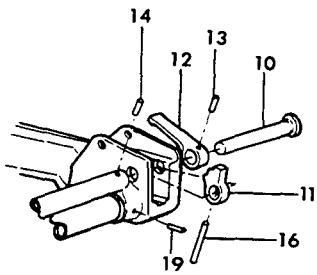

VIEW A

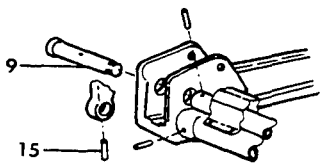

VIEW B

55-313-28

FIGURE 13-10.PILOT AND COPILOT SEATS
/SHEET 1 OF 3 SHEETS/

ATA CODE & INDEX NO.	PART NO.	DESCRIPTION 1 2 3 4 5 6 7	UNITS PER ASSY	USABLE ON CODE
13-10	96-534013-3	SEAT ASSY,PILOTS.	1	1
	35-534425-1	SEAT ASSY,PILOTS.	1	2
	35-534425-19	SEAT ASSY,PILOTS.	1	3
	96-534013-4	SEAT ASSY,COPILOTS.	1	1
	35-534425-2	SEAT ASSY,COPILOTS.	1	2
	35-534425-20	SEAT ASSY,COPILOTS.	1	3
	96-534014-3	. CHAIR ASSY,PILOTS	1	4
	96-534014-4	. CHAIR ASSY,COPILOTS	1	4
	18-534013-3	. . FRAME ASSY,PILOTS CHAIR	1	4
	18-534013-61	. . FRAME ASSY,COPILOTS CHAIR	1	4
	18-534013-39	. . . BACK ASSY	1	4
		/ATTACHING PARTS/		
- 1	AN4-16A	. . . BOLT.	2	
	AN960-416	. . . WASHER.	2	
	AN960-416L	. . . WASHER.	2	
	22K2-048	. . . NUT,CAP	2	
- 2	18-534013-13	. . . . WELD ASSY,CHAIR BACK.	1	4
		/ATTACHING PARTS/		
- 3	AN525-10R22	. . . . SCREW	4	
	AN960-10	. . . . WASHER.	4	
	MS20365-1032	. . . . NUT	4	
- 4	18-534013-15	. . . . TUBE,CHAIR BACK	1	4
		/ATTACHING PARTS/		
- 5	MS171688	. . . . PIN,ROLL.	2	
- 6	18-534016-1	. . . . FORGING,CHAIR BACK LH	1	4
- 7	18-534016-2	. . . . FORGING,CHAIR BACK RH	1	4
	18-534013-45	. . . BOTTOM ASSY,PILOT CHAIR	1	4
	18-534013-135	. . . BOTTOM ASSY,COPILOT CHAIR	1	4
- 8	18-534013-19	. . . . TUBE,PILOTS CHAIR BOTTOM.	1	4
- 9	MS20392-5-81	. . . . PIN/SUPERSEDES 18-534013-21/.	1	4
- 10	MS20392-5-93	. . . . PIN/SUPERSEDES 18-534013-23/.	1	4
- 11	18-534013-25	. . . . CAM,CHAIR BACK RELEASE.	2	4
- 12	18-534013-149	. . . . HANDLE,CHAIR BACK RELEASE	1	4
		/ATTACHING PARTS/		
- 13	MS171498	. . . . PIN,ROLL.	1	
- 14	MS171499	. . . . PIN,ROLL.	1	4
- 15	MS171530	. . . . PIN,ROLL.	1	4
- 16	MS171539	. . . . PIN,ROLL.	1	4
- 17	18-534022-1	. . . . SPRING,BACK RELEASE TORSION INBD.	1	4
	18-534022-2	. . . . SPRING,BACK RELEASE TORSION OUTBD	1	4
	AN960-616	. . . . WASHER.	1	4
- 18	18-534013-17	. . . . TUBE,CHAIR BOTTOM	1	4
		/ATTACHING PARTS/		
- 19	MS171534	. . . . PIN,ROLL.	2	
- 20	18-534015-1	. . . . SIDE,CHAIR BOTTOM LH.	1	4
- 21	18-534015-2	. . . . SIDE,CHAIR BOTTOM RH.	1	4
- 22	18-534013-27	. . . . TUBE,CHAIR BOTTOM	1	4

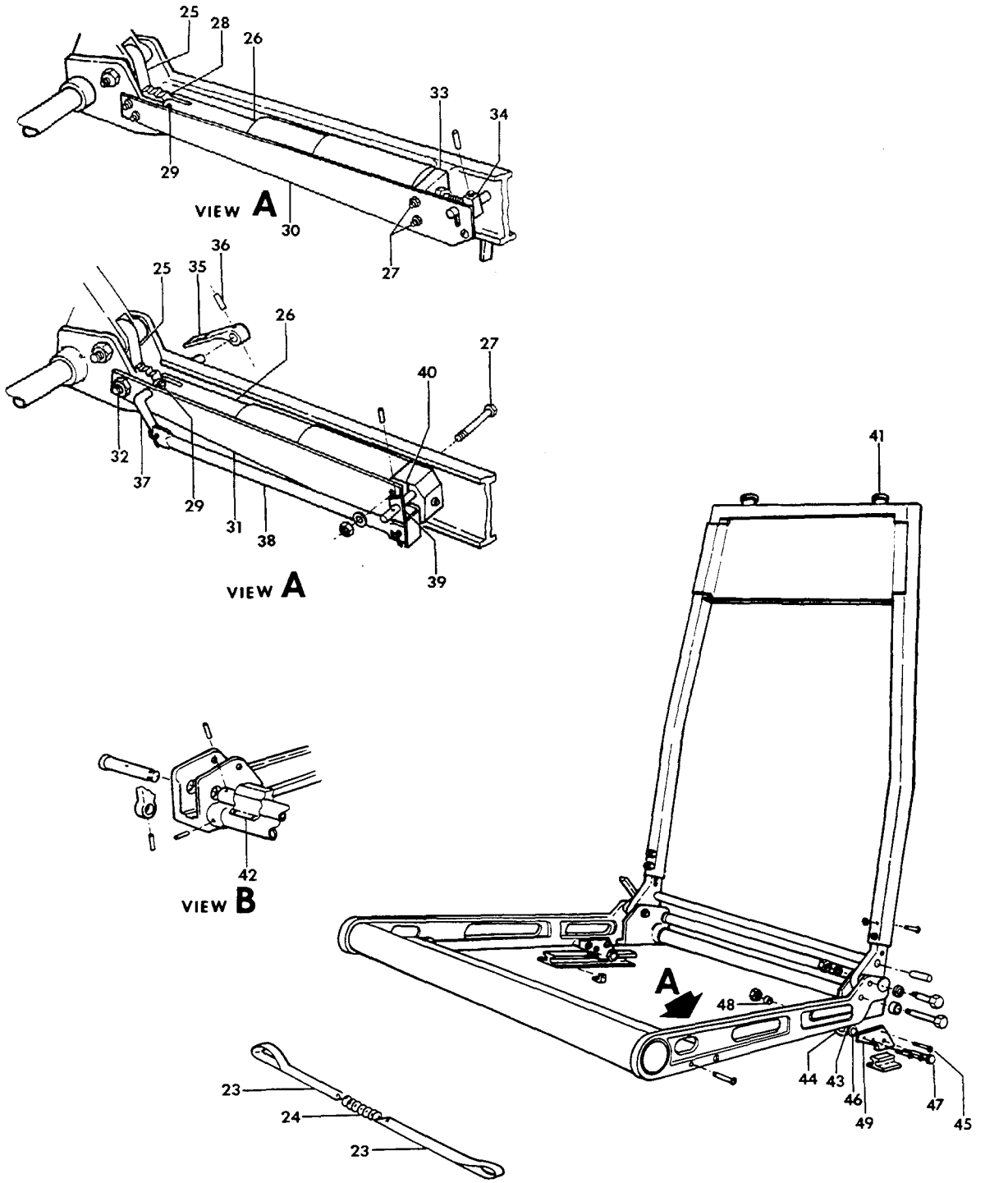

FIGURE 13-10.PILOT AND COPILOT SEATS
/SHEET 2 OF 3 SHEETS/

SUB-SECT UNIT & ITEM NO.	PART NO.	DESCRIPTION 1 2 3 4 5 6 7	UNITS PER ASSY	USABLE ON CODE
13-10 - 23	18-534013-77	STRAP,SEAT BOTTOM SUPPORT	4	5
- 24	35-534157	SPRING,SEAT BOTTOM SUPPORT.	4	5
- 25	18-534013	GEAR,COPILOTS SEAT.	1	4
- 26	18-380008	LOCK,COPILOTS SEAT BACK ADJUSTING	1	6
	18-534013-103	LOCK,COPILOTS SEAT BACK ADJUSTING	1	7
		/ATTACHING PARTS/		
- 27	AN3-16A	BOLT.	2	
	100951N125YP	WASHER.	1	6
	100951S060YP	WASHER.	1	6
	AN960-10	WASHER.	2	7
	MS20365-1032	NUT	2	4
		----*----		
- 28	18-534024-1	RACK,COPILOTS SEAT GEAR	1	4
		/ATTACHING PARTS/		
- 29	AN4-12A	BOLT.	1	
		----*----		
- 30	18-534013-31	STRAP,COPILOTS SEAT	1	6
- 31 R	18-534013-131	STRAP	1	7
		/ATTACHING PARTS/		
- 32	AN26-9A	BOLT.	1	
	AN960-616	WASHER.	2	
	MS20365-624	NUT	1	
		----*----		
- 33	18-534013-29	BLOCK,COPILOTS SEAT	1	6
- 34	18-534013-7	BLOCK	1	6
	100801A14-0375	SPACER,HANDLE	1	4
- 35	18-534013-149	HANDLE,COPILOTS CHAIR BACK RELEASE.	1	4
		/ATTACHING PARTS/		
- 36	MS171498	PIN,ROLL.	1	
		----*----		
	18-534013-55	LEVER,COPILOTS CHAIR BACK RELEASE	1	8
- 37	18-534013-129	LEVER,COPILOTS CHAIR BACK RELEASE	1	7
	18-534013-59	CABLE ASSY,COPILOTS SEAT.	1	9
	AN515-6R3	SCREW	1	9
	18-534013-73	TUBE ASSY,COPILOTS SEAT	1	6
	100942H0022-22	SPRING.	1	6
- 38	18-534013-93	TUBE,COPILOTS SEAT.	1	7
- 39	18-534013-123	STOP.	1	7
		/ATTACHING PARTS/		
	MS171498	PIN,ROLL.	1	
		----*----		
- 40	18-534013-91	SPACER.	1	7
- 41	130010	FITTING,HEADREST.	2	4
- 42	18-534013-67	COVER,CAM MECHANISM	1	4
		/ATTACHING PARTS/		
	AN530-6-6	SCREW	3	
	AN227-8B	STUD.	3	
	NAS384-6-6	SCREW	3	
		----*----		
- 43	96-534014-55	FOOT,CHAIR REAR LH.	1	4
- 44	96-534014-56	FOOT,CHAIR REAR RH.	1	4
		/ATTACHING PARTS/		
- 45	AN525-10R	SCREW	3	
	MS20365-1032	NUT	3	
		----*----		
- 46	118641	ROLLER,CHAIR AFT.	2	4
		/ATTACHING PARTS/		
- 47	AN3A/M/	BOLT.	1	
- 48	NAS43DD3-16	SPACER.	1	
- 49	100943ZA016J	SPRING.	1	
	AN960-10	WASHER.	1	
	MS20365-1032	NUT	1	
		----*----		

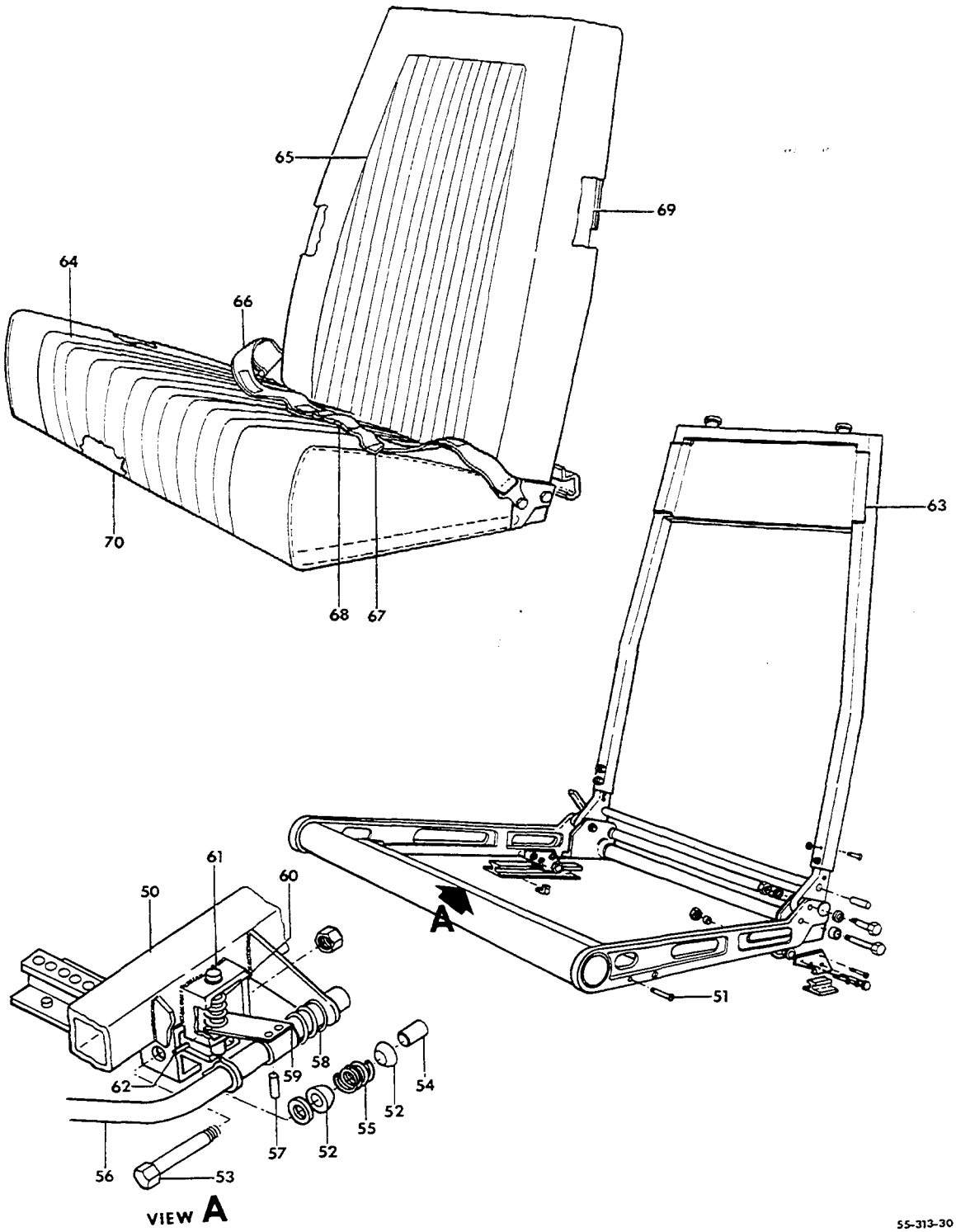

FIGURE 13-10.PILOT AND COPILOT SEATS
/SHEET 3 OF 3 SHEETS/

SUB-SECT UNIT & ITEM NO.	PART NO.	DESCRIPTION 1 2 3 4 5 6 7	UNITS PER ASSY	USABLE ON CODE
13-10 - 50	96-534014-23	. . WELD ASSY,CHAIR FOOT FWD.	1	4
		/ATTACHING PARTS/		
- 51	AN520-10R	. . SCREW	4	
	MS20365-1032	. . NUT	4	
		----*----		
- 52	118641	. . ROLLER,CHAIR FWD.	2	4
		/ATTACHING PARTS/		
- 53	AN3A/M/	. . BOLT.	1	
- 54	NAS43DD3-16	. . SPACER.	1	
- 55	100943ZA016J	. . SPRING.	1	
	AN960-10	. . WASHER.	1	
	MS20365-1032	. . NUT	1	
		----*----		
- 56	96-534014-63	. . HANDLE,CHAIR ADJUSTMENT	1	4
		/ATTACHING PARTS/		
- 57	MS171498	. . PIN,ROLL.	2	
		----*----		
- 58	100943ZJ108D	. . SPRING,ADJUSTING HANDLE	1	4
- 59	96-534014-69	. . WELD ASSY,ADJUSTING PIN LIFTER.	1	4
- 60	100943ZS023G	. . SPRING,ADJUSTING PIN.	1	4
	100951X063WZ	. . WASHER.	2	4
- 61	R 60-530013-49	. . PIN,SEAT ADJUSTMENT	1	4
- 62	1/16X1/2	. . PIN,DRIVELOK/TYPE E/.	2	4
- 63	33-534027-11	. COVER,SEAT BACK FRAME	1	4
	96-534013-603	. UPHOLSTERY ASSY,PILOT & COPILOT SEAT.	1	1
	35-534425-602	. UPHOLSTERY ASSY,PILOT & COPILOT SEAT.	1	2
	35-534425-606	. UPHOLSTERY ASSY,PILOT & COPILOT SEAT.	1	3
- 64	96-534013-19	. . PANEL,SEAT BOTTOM INSERT.	1	1
	35-534425-29	. . PANEL,SEAT BOTTOM INSERT.	1	3
	35-534425-13	. . COVER ASSY,SEAT BOTTOM.	1	2
	35-534425-25	. . COVER ASSY,SEAT BOTTOM.	1	10
- 65	96-534013-17	. . PANEL,SEAT BACK INSERT.	1	1
	35-534425-27	. . PANEL,SEAT BACK INSERT.	1	3
	35-534425-11	. . COVER ASSY,SEAT BACK.	1	2
	35-534425-23	. . COVER ASSY,SEAT BACK.	1	10
- 66	130498A19-33	. . BELT ASSY,SEAT.	1	4
		/ATTACHING PARTS/		
	AN24-38A/M/	. . BOLT.	2	
	100801X6-0813	. . SPACER,INBD PILOT & COPILOT CHAIR	1	
	102933D5ZM0190	. . SPACER,OUTBD PILOT & COPILOT CHAIR.	1	
	AN960-416	. . WASHER.	2	
	MS20365-428	. . NUT	2	
	22K2-048	. . NUT,CAP	2	
		----*----		
- 67	D611A	. . . TIP,SEAT BELT	1	4
- 68	FDK2707	. . . BUCKLE ASSY,SEAT BELT	1	4
- 69	96-534016-1	. CUSHION ASSY,BACK	1	4
	18-534020-3	. PAD,SEAT BACK	1	11
- 70	96-534027	. CUSHION ASSY,SEAT BOTTOM.	1	4
	35-534426-1	. CUSHION ASSY,SEAT BOTTOM LH	1	11
	35-534426-2	. CUSHION ASSY,SEAT BOTTOM RH	1	11

CODES OF EFFECTIVITY

1	TC-191 THRU TC-501	2	TC-502 THRU TC-1298
3	TE-1 THRU TE-451	4	TC-191 THRU TC-1298 TE-1 THRU TE-451
5	TC-191 THRU TC-709	6	TC-191 THRU TC-698
7	TC-699 THRU TC-1298 TE-1 THRU TE-451	8	TC-226 THRU TC-698
9	TC-191 THRU TC-254	10	TC-225 THRU TC-501
11	TC-502 THRU TC-1298 TE-1 THRU TE-451		

25-13-20
PILOT AND COPILOT SEATS
TE-452 THRU TE-767

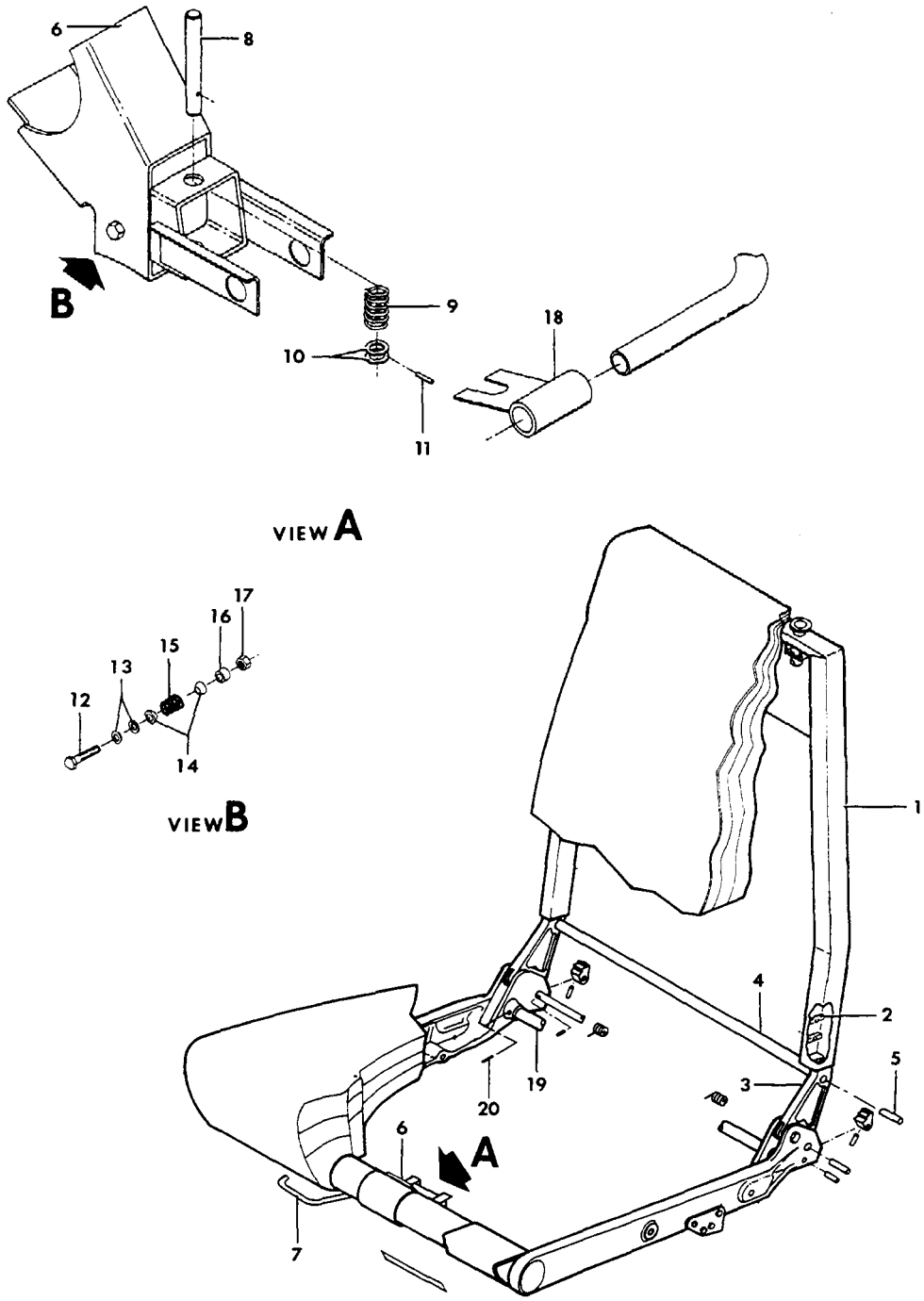

55-313-31

FIGURE 13-20. PILOT AND COPILOT SEATS
/SHEET 1 OF 3 SHEETS/

ATA CODE & INDEX NO.	PART NO.	DESCRIPTION 1 2 3 4 5 6 7	UNITS PER ASSY	USABLE ON CODE
13-20	96-534071-1	SEAT INSTL,PILOT AND COPILOT.	NP	1
	96-534072-1	. SEAT ASSY,PILOT	1	1
	96-534072-3	. SEAT ASSY,COPILOT	1	1
	96-534073-1	. . CHAIR FRAME ASSY,PILOT.	1	1
	96-534073-3	. . CHAIR FRAME ASSY,COPILOT.	1	1
	60-530042	. . . SEAT BACK ASSY,PILOT CHAIR/FOR. . . . . REPLACEMENT ORDER 36-530043-3/	NP	2
	60-530042-15	. . . SEAT BACK ASSY,COPILOT CHAIR/FOR. . . . . REPLACEMENT ORDER 36-530043-3/	NP	2
	36-530043-3	. . . SEAT BACK ASSY,PILOT & COPILOT CHAIR. . . /ATTACHING PARTS/	1	3
	NAS221-24	. . . SCREW	2	
	100951X032WF	. . . SPACER/UNDER SCREW HEAD/.	2	
	102933D4ZM0190	. . . SPACER.	2	
	AN960-10L	. . . WASHER.	2	
	22K2-02	. . . CAP NUT	2	
		——*——		
- 1	60-530042-1	. . . . WELD ASSY,CHAIR BACK.	1	2
	36-530043-7	. . . . WELD ASSY,CHAIR BACK.	1	3
- 2	60-530042-13	. . . . SPACER.	1	2
- 3	60-530040-1	. . . . ADAPTER . . . . . /ATTACHING PARTS/	2	1
	AN525-10R22	. . . . SCREW	2	2
	AN525-10R14	. . . . SCREW	2	2
	AN525-10R14	. . . . SCREW	2	3
	AN960-10	. . . . WASHER.	2	2
	AN960-10L	. . . . WASHER.	2	3
	MS20364-1032	. . . . NUT	2	1
		——*——		
- 4	60-530042-9	. . . . TUBE. . . . . /ATTACHING PARTS/	1	2
- 5	MS171684	. . . . ROLL PIN.	2	
		——*——		
	96-534073-7	. . . FRAME ASSY,CHAIR BOTTOM	1	1
- 6	96-534073-33	. . . . WELD ASSY,FRONT LEG	1	1
- 7	96-534073-13	. . . . HANDLE.	1	4
	96-534073-51	. . . . HANDLE ASSY	1	5
- 8	36-530025-15	. . . . PIN	1	1
- 9	100943ZS027G	. . . . SPRING.	1	1
- 10	AN960-416L	. . . . WASHER.	2	1
- 11	1/16 X .50	. . . . PIN,TYPE E.	1	1
- 12	AN3-14A/M/	. . . . BOLT.	1	1
- 13	AN960-10L	. . . . WASHER.	2	1
- 14	118641	. . . . ROLLER.	2	1
- 15	100943ZA016J	. . . . SPRING.	1	1
- 16	102933D4ZJ0190	. . . . SPACER.	1	1
- 17	MS20365-1032	. . . . NUT	1	1
- 18	60-530013-93	. . . . WELD ASSY/SUPERSEDES 60-530013-11/. . . /ATTACHING PARTS/	1	1
	MS171498	. . . . ROLL PIN.	2	
		——*——		
- 19	36-530025-27	. . . . TUBE,SUPPORT. . . . . /ATTACHING PARTS/	1	1
- 20	MS171565	. . . . ROLL PIN.	2	
		——*——		

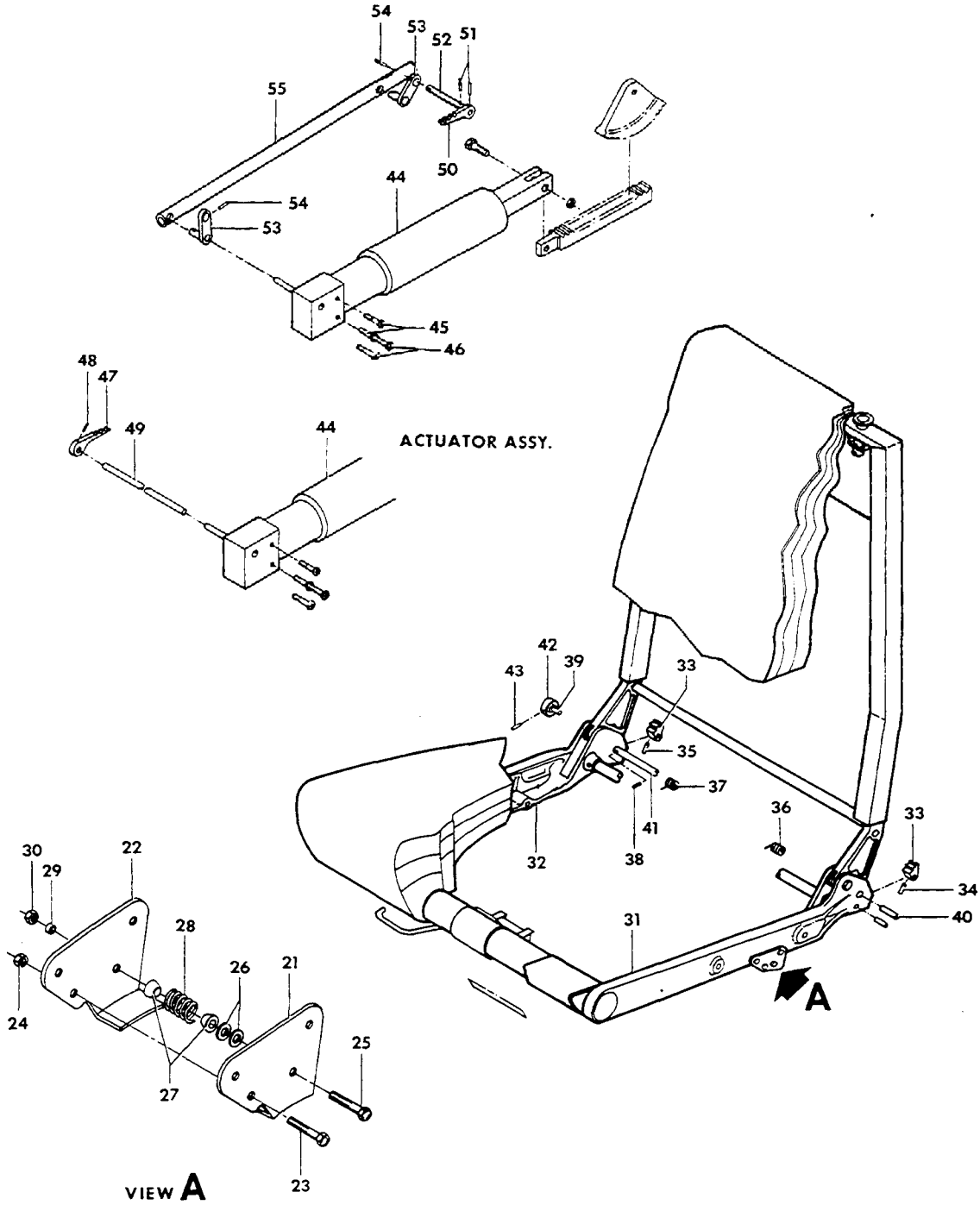

SS-313-32

FIGURE 13-20. PILOT AND COPILOT SEATS
/SHEET 2 OF 3 SHEETS/

ATA CODE & INDEX NO.	PART NO.	1 2 3 4 5 6 7 DESCRIPTION	UNITS PER ASSY	USABLE ON CODE
13-20 - 21	36-530025-13	FOOT	2	1
- 22	36-530025-14	FOOT	2	1
		/ATTACHING PARTS/		
	AN3-14A/M/	BOLT	4	
	AN960-10L	WASHER	4	
	MS20365-1032	NUT	4	
- 23	AN3-14A/M/	BOLT	2	1
	102933D4ZJ1000	SPACER	2	1
	AN960-10L	WASHER	2	1
- 24	MS20365-1032	NUT	2	1
- 25	AN3-14A/M/	BOLT	2	1
- 26	AN960-10L	WASHER	4	1
- 27	118641	ROLLER	4	1
- 28	100943ZA016J	SPRING	2	1
- 29	102933D4ZJ0190	SPACER	2	1
- 30	MS20365-1032	NUT	2	1
- 31	60-530039-3	FRAME,LH	1	1
- 32	60-530039-4	FRAME,RH	1	1
	96-534073-9	SUPPORT INSTL,PILOT SEAT BACK	NP	1
- 33	60-530043-3	CAM,PILOT CHAIR	2	1
		/ATTACHING PARTS/		
- 34	MS171536	ROLL PIN	1	
- 35	MS171539	ROLL PIN	1	
- 36	60-530046-1	SPRING,PILOT CHAIR LH	1	1
- 37	60-530046-2	SPRING,PILOT CHAIR RH	1	1
- 38	MS171499	ROLL PIN,PILOT CHAIR	2	1
- 39	60-530044	PIN,PILOT CHAIR RH	1	1
- 40	60-530045	PIN,PILOT CHAIR LH	1	1
- 41	60-530013-41	TUBE,PILOT CHAIR	1	1
- 42	60-530047	KNOB,PILOT CHAIR	1	1
		/ATTACHING PARTS/		
- 43	MS171507	ROLL PIN	1	
- 44	60-530051-3	ACTUATOR ASSY,COPILOT CHAIR	1	1
		/ATTACHING PARTS/		
- 45	NAS221-29	SCREW	2	
- 46	NAS221-8	SCREW	2	
	AN960-10L	WASHER	6	
	MS20365-1032	NUT	4	
- 47	60-530052-1	HANDLE,COPILOT CHAIR/RECLINE/	1	6
		/ATTACHING PARTS/		
- 48	MS171498	ROLL PIN	1	
- 49	96-534073-31	TUBE	1	6
- 50	60-530052	HANDLE,COPILOT CHAIR/RECLINE/	1	7
		/ATTACHING PARTS/		
- 51	MS171498	ROLL PIN	2	
- 52	96-534073-49	ROD	1	7
- 53	96-534073-43	STRAP	2	7
		/ATTACHING PARTS/		
- 54	MS171498	ROLL PIN	1	
- 55	96-534073-45	TUBE	1	7
		/ATTACHING PARTS/		
	MS20392-1C19	PIN	2	
	AN960-4L	WASHER	2	
	AN381-2-7	PIN,COTTER	2	

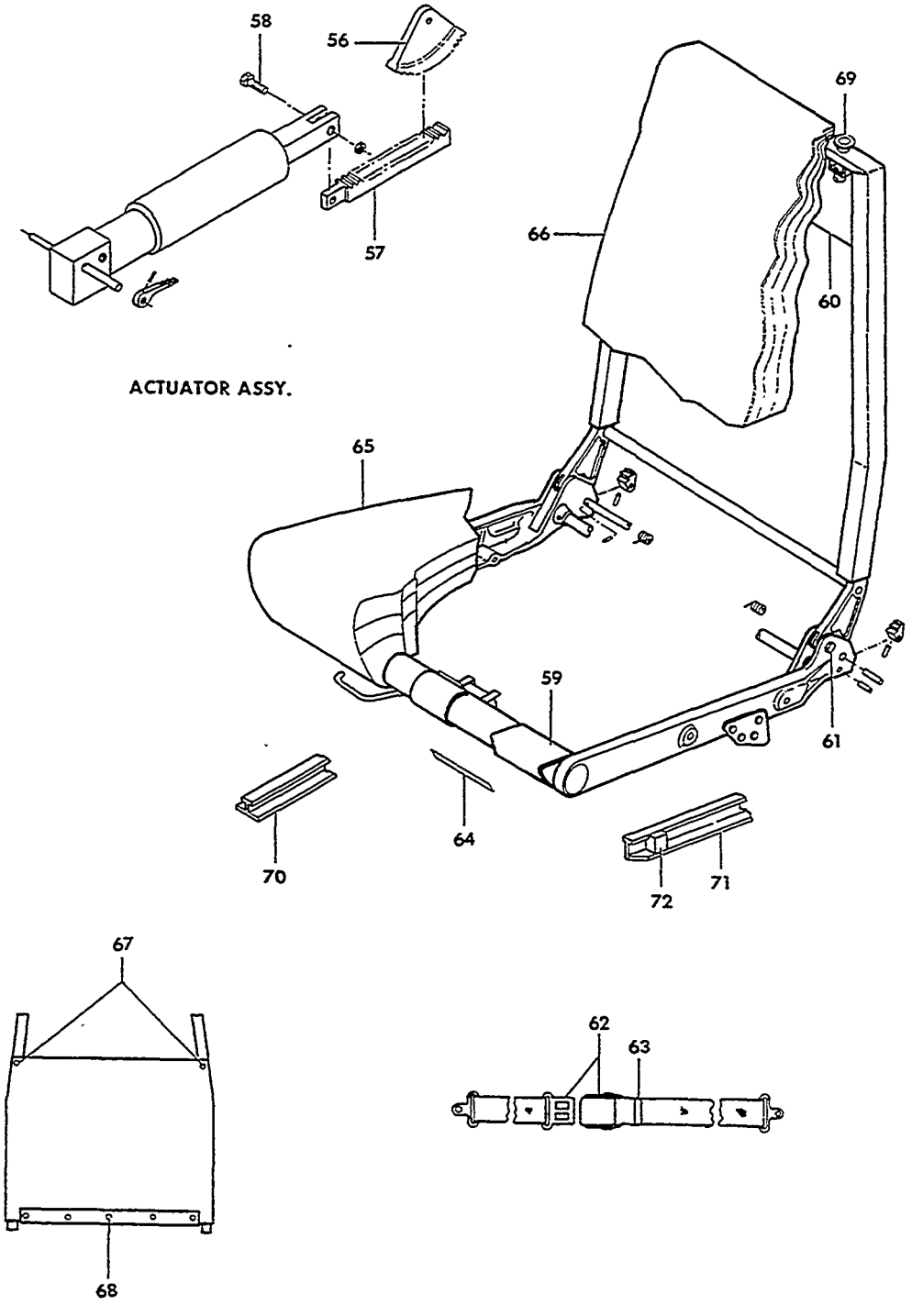

FIGURE 13-20.PILOT AND COPILOT SEATS
/SHEET 3 OF 3 SHEETS/

SUB-SECT UNIT & ITEM NO.	PART NO.	DESCRIPTION 1 2 3 4 5 6 7	UNITS PER ASSY	USABLE ON CODE
13-20 - 56	60-530041-1	. . . GEAR.	1	1
- 57	60-530054-1	. . . GEAR RACK ASSY,COPILOT CHAIR.	1	1
		/ATTACHING PARTS/		
- 58	AN4-7A/H/	. . . BOLT.	1	
	MS20365-428	. . . NUT	1	
- 59	36-530023-17	. . EXTENSION,CHAIR BOTTOM.	1	1
- 60	33-534027-11	. . PAN,CHAIR BACK.	1	1
	130498C19-32	. . SEAT BELT ASSY.	1	1
		/ATTACHING PARTS/		
- 61	NAS221-24	. . BOLT.	2	
	100951X032WF	. . SPACER.	2	
	102933D4ZM0190	. . SPACER.	2	
	AN960-10L	. . WASHER.	2	
	22K2-02	. . NUT	2	
- 62	CS4000W/265-4	. . . BUCKLE ASSY	1	1
- 63	D611A	. . . TIP	1	1
- 64	130569	. . PLATE,SEAT IDENTIFICATION	1	1
		/ATTACHING PARTS/		
	AN530-4R4	. . SCREW	2	
- 65	96-534072-15	. . SEAT COVER ASSY	1	1
- 66	96-534072-11	. . BACK COVER ASSY	1	1
		/ATTACHING PARTS/		
- 67	NAS384-6-6P	. . SCREW	2	
	NAS391-6P	. . WASHER.	2	
- 68	AN227-6B	. . . BUTTON,UPHOLSTERY	5	1
	AN227-7B	. . . SOCKET,UPHOLSTERY	5	1
	AN227-8B	. . . STUD,UPHOLSTERY	5	1
	AN227-9B	. . . EYELET,UPHOLSTERY	5	1
- 69	130010	. . MOULDING.	2	1
- 70	95-420017-5	TRACK,SEAT CENTER	2	1
	95-420017-17	TRACK,SEAT INBOARD.	2	1
- 71	95-420017-19	TRACK,SEAT OUTBOARD	2	1
- 72	R 002-430013-31	STOP,SEAT TRACK	16	1
		/ATTACHING PARTS/		
	NAS221	BOLT.	8	
	MS20365-1032	NUT	8	

CODES OF EFFECTIVITY

1	TE-452 THRU TE-767	2	TE-452 THRU TE-594
3	TE-595 THRU TE-767	4	TE-452 THRU TE-642
5	TE-643 THRU TE-767	6	TE-452 THRU TE-564
7	TE-565 THRU TE-767		

25-13-30
PILOT AND COPILOT SEATS
TC-1299 THRU TC-1402,TE-768 THRU TE-846

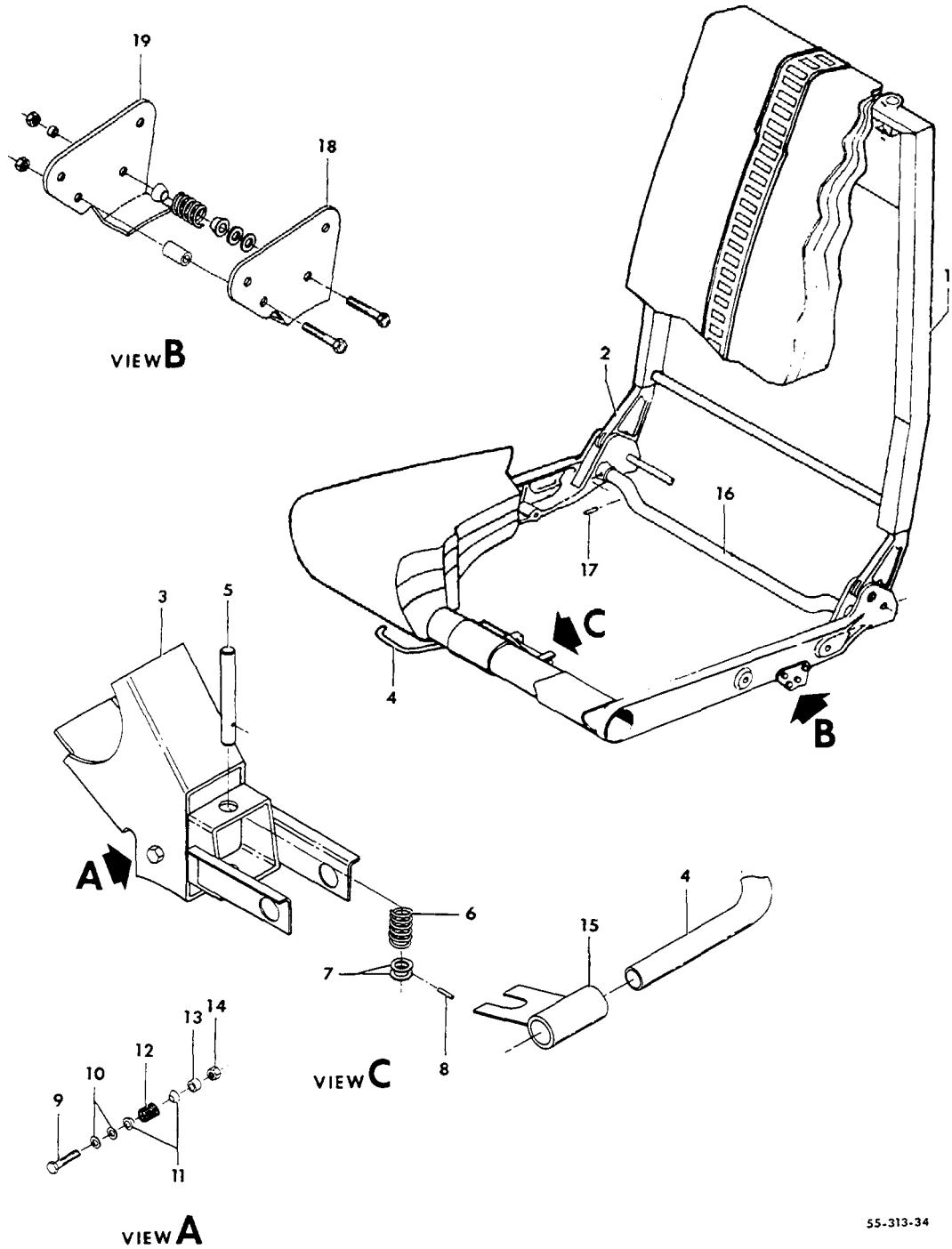

FIGURE 13-30.PILOT AND COPILOT SEATS
/SHEET 1 OF 3 SHEETS/

ATA CODE & INDEX NO.	PART NO.	DESCRIPTION 1 2 3 4 5 6 7	UNITS PER ASSY	USABLE ON CODE
13-30	96-534071-5	SEAT INSTL/1 CAM,3 RECLINE/	NP	1
	58-530040-5	SEAT INSTL/4 PLACE CAM/	NP	1
	96-534099-601	. SEAT ASSY,PILOTS/CAM BACK/	1	1
	96-534099-3	. SEAT ASSY,COPILOTS/RECLINE/	1	1
	96-534099-17	. SEAT ASSY,COPILOTS/CAM BACK/	1	1
	96-534073-1	. . FRAME ASSY,PILOT SEAT	1	1
	96-534073-3	. . FRAME ASSY,COPILOTS/RECLINE/	1	1
	96-534073-5	. . FRAME ASSY,COPILOT/CAM/	1	1
	58-530026-1	. . . BACK ASSY,SEAT	1	1
		/ATTACHING PARTS/		
	NAS221-24	. . . BOLT	2	
	100951X032WF	. . . WASHER	2	
	102933D4ZM0190	. . . SPACER	2	
	AN960-10L	. . . WASHER	2	
	22K2-02	. . . NUT,CAP	2	
		——*——		
- 1	58-530026-5	. . . . WELD ASSY,SEAT BACK	1	1
- 2	60-530040-1	. . . . ADAPTER	2	1
		/ATTACHING PARTS/		
	AN525-10R14	. . . . SCREW	4	
	AN960-10	. . . . WASHER	4	
	MS20364-1032	. . . . NUT	4	
		——*——		
	96-534073-7	. . . FRAME ASSY,BOTTOM	1	1
- 3	96-534073-33	. . . . WELD ASSY,LEG	1	1
- 4	96-534071-51	. . . . HANDLE ASSY,SEAT ADJUST	1	1
		/ATTACHING PARTS/		
	MS171498	. . . . PIN	2	
		——*——		
- 5	35-530025-15	. . . . PIN	1	1
- 6	100943ZS027G	. . . . SPRING	1	1
- 7	AN960-416L	. . . . WASHER	2	1
- 8	1/16X1/2	. . . . PIN,DRIVLOK/TYPE E/	1	1
- 9	AN3-14A/M/	. . . . BOLT	1	1
- 10	AN960-10L	. . . . WASHER	2	1
- 11	118641	. . . . ROLLER	2	1
- 12	100943ZA016J	. . . . SPRING	1	1
- 13	102933D4ZJ0190	. . . . SPACER	1	1
- 14	MS20365-1032	. . . . NUT	1	1
- 15	60-530013-93	. . . . WELD ASSY/SUPERSEDES 60-530013-11/	1	1
		/ATTACHING PARTS/		
	MS171498	. . . . PIN	2	
		——*——		
- 16	36-530025-27	. . . . TUBE	1	1
		/ATTACHING PARTS/		
- 17	MS171564	. . . . PIN,ROLL	2	
		——*——		
- 18	36-530025-13	. . . . FOOT	2	1
- 19	36-530025-14	. . . . FOOT	2	1
		/ATTACHING PARTS/		
	AN3-14A/M/	. . . . BOLT/CAM ADJUST/	4	
	AN3-15A/M/	. . . . BOLT/RECLINE/	4	
	AN960-10L	. . . . WASHER	4	
	MS20365-1032	. . . . NUT	4	
		——*——		

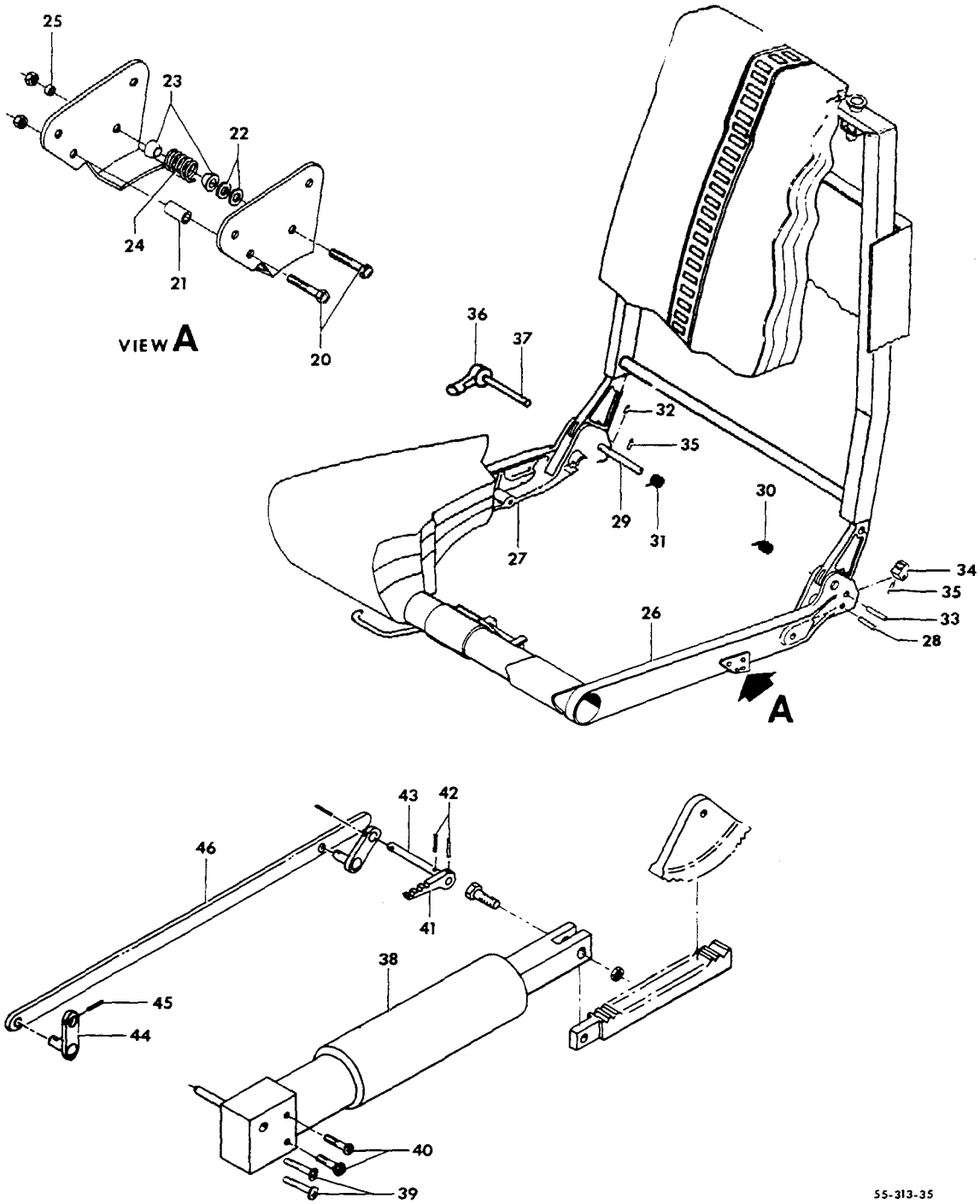

FIGURE 13-30.PILOT AND COPILOT SEATS
/SHEET 2 OF 3 SHEETS/

ATA CODE & INDEX NO.	PART NO.	DESCRIPTION 1 2 3 4 5 6 7	UNITS PER ASSY	USABLE ON CODE
13-30 - 20	AN3-14A/M/	. . . . BOLT.	4	1
	AN960-10L	. . . . WASHER.	4	1
	MS20365-1032	. . . . NUT	4	1
- 21	102933D4ZJ1000	. . . . SPACER.	2	1
- 22	AN960-10L	. . . . WASHER.	4	1
- 23	118641	. . . . ROLLER.	4	1
- 24	100943ZA016J	. . . . SPRING.	2	1
- 25	102933D4ZJ0190	. . . . SPACER.	2	1
- 26	60-530039-3	. . . . FRAME,LH.	1	1
- 27	60-530039-4	. . . . FRAME,RH.	1	1
		/ATTACHING PARTS/		
	AN515-6R8	. . . . SCREW	8	
	H14-06	. . . . NUT	8	
		----*----		
- 28	MS171532	. . . PIN,ROLL.	2	1
	96-534073-9	. . . SUPPORT INSTL,PILOT BACK/CAM ADJUST/. . .	NP	1
	96-534073-10	. . . SUPPORT INSTL,COPILOT BACK/CAM ADJUST/. .	NP	1
- 29	60-530013-41	. . . . TUBE,CAM.	1	1
		/ATTACHING PARTS/		
- 30	60-530046-1	. . . . SPRING.	1	
- 31	60-530046-2	. . . . SPRING.	1	
- 32	MS171499	. . . . PIN,ROLL.	2	
		----*----		
- 33	60-530045	. . . . PIN	1	1
- 34	60-530043-5	. . . . CAM/SUPERSEDES 60-530043-3/	2	1
		/ATTACHING PARTS/		
- 35	MS171539	. . . . PIN	2	
		----*----		
	58-530045-1	. . . . HANDLE ASSY,LH.	1	1
	58-530045-2	. . . . HANDLE ASSY,RH.	1	1
	03658-530045-3	. . . . . HANDLE.	1	1
- 37	58-530046-1	. . . . . PIN	1	1
- 38	60-530051-3	. . . ACTUATOR ASSY/RECLINE/.	1	1
		/ATTACHING PARTS/		
- 39	NAS221-8	. . . SCREW	2	
- 40	NAS221-29	. . . SCREW	2	
	AN960-10L	. . . WASHER.	4	
	MS20365-1032	. . . NUT	4	
		----*----		
- 41	60-530052	. . . HANDLE ASSY/RECLINE/.	1	2
	60-530052-3	. . . HANDLE ASSY/RECLINE/.	1	3
		/ATTACHING PARTS/		
- 42	MS171498	. . . PIN,ROLL.	2	
	NAS43DD4-18	. . . SPACER.	1	
		----*----		
- 43	96-534073-49	. . . ROD/RECLINE/.	1	1
- 44	96-534073-43	. . . STRAP/RECLINE/.	2	1
		/ATTACHING PARTS/		
- 45	MS171498	. . . PIN,ROLL.	2	
		----*----		
- 46	96-534073-45	. . . TUBE/RECLINE/	1	1
		/ATTACHING PARTS/		
	MS20392-1C19	. . . PIN	2	
	AN960-4L	. . . WASHER.	2	
	AN381-2-7	. . . PIN,COTTER.	2	
		----*----		

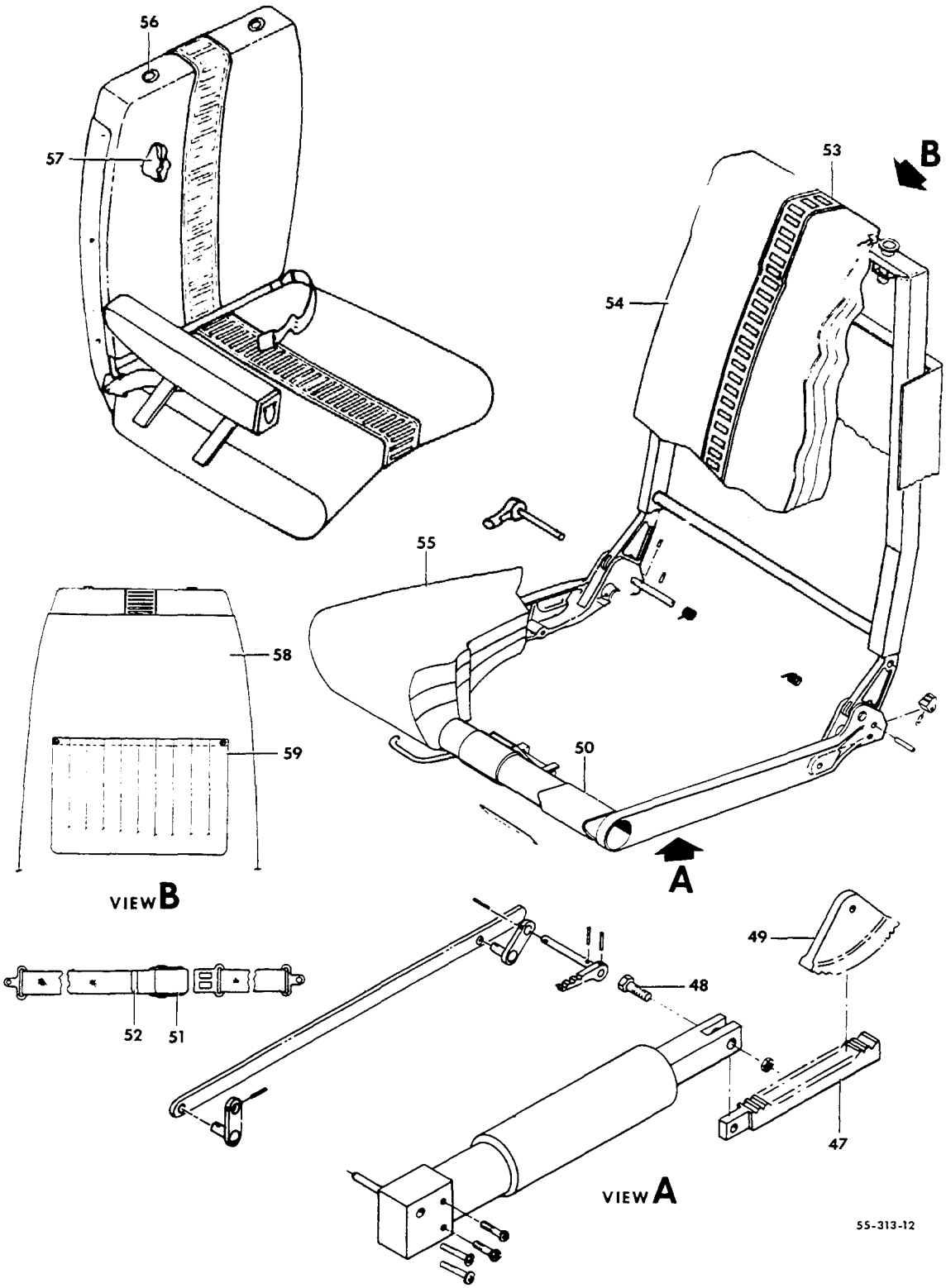

FIGURE 13-30. PILOT AND COPILOT SEATS
/SHEET 3 OF 3 SHEETS/

ATA CODE & INDEX NO.	PART NO.	DESCRIPTION 1 2 3 4 5 6 7	UNITS PER ASSY	USABLE ON CODE
13-30	96-534073-47	. . . PLATE/RECLINE/.	2	1
- 47	60-530054-1	. . . RACK,GEAR/RECLINE/.	1	1
		/ATTACHING PARTS/		
- 48	AN4-7A/M/	. . . BOLT.	1	
	MS20365-428	. . . NUT	1	
		——*——		
- 49	60-530041-1	. . . GEAR/RECLINE/	1	1
- 50	36-530023-17	. . EXTENSION,CHAIR BOTTOM.	1	1
		/ATTACHING PARTS/		
	AN530-6R5	. . SCREW	10	
		——*——		
	130498C19-32	. . BELT ASSY,SAFETY.	1	1
- 51	CS4000W/265-4	. . . BUCKLE ASSY	1	1
	50-534733-1	. . . PLACARD	1	1
- 52	D611A	. . . TIP	1	1
- 53	96-534099-33	. . INSERT,DIELECTRIC	2	1
- 54	96-534099-31	. . COVER ASSY,BACK	1	1
	96-534099-29	. . COVER ASSY,BOTTOM	1	2
- 55	96-534099-45	. . COVER ASSY,BOTTOM	1	3
- 56	130010	. . MOULDING,HEADREST	2	1
- 57	96-534099-27	. . PAD	1	1
	96-534099-23	. . SHELL ASSY,SEAT BACK/RECLINE/	1	1
	96-534099-25	. . SHELL ASSY,SEAT BACK/CAM/	1	1
- 58	35-534453-1	. . . SHELL,SEAT BACK/CAM/.	1	1
	35-534453-3	. . . SHELL,SEAT BACK/RECLINE/.	1	1
		/ATTACHING PARTS/		
	NAS387-6-10P	. . . SCREW	6	
	NAS391-6P	. . . WASHER.	6	
		——*——		
- 59	96-534099-35	. . . POCKET ASSY	1	1
		/ATTACHING PARTS/		
	NAS384-6-6P	. . . SCREW	2	
	NAS381-6P	. . . WASHER.	2	
		——*——		
	58-530041-28	COVER,PILOT SEAT/GREEN TENT CLOTH/.	1	1
	58-530041-27	COVER,COPILOT SEAT/GREEN TENT CLOTH/.	1	1
	58-530041-25	COVER,SEAT BACK/GREEN TENT CLOTH/	1	1

CODES OF EFFECTIVITY

1 TC-1299 THRU TC-1402 2 TC-1299 THRU TC-1333
TE-768 THRU TE-846 TE-768 THRU TE-846
3 TC-1334 THRU TC-1402

"END"

25-13-40
PILOT AND COPILOT SEATS
TC-1403 THRU TC-1607
TE-847 THRU TE-942 EXCEPT TE-938

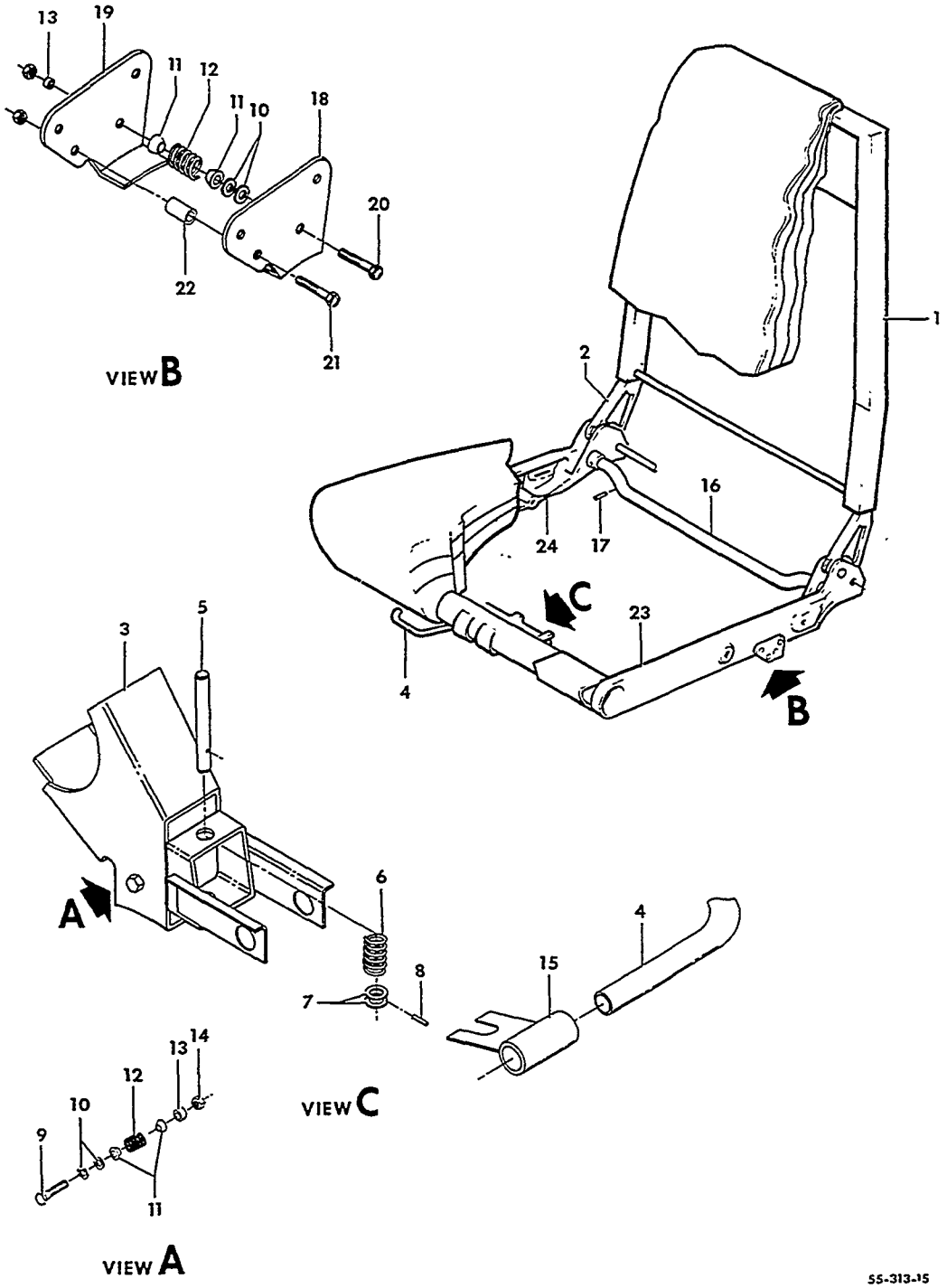

FIGURE 13-40.PILOT AND COPILOT SEATS
/SHEET 1 OF 3 SHEETS/

ATA CODE & INDEX NO.	PART NO.	DESCRIPTION 1 2 3 4 5 6 7	UNITS PER ASSY	USABLE ON CODE
13-40	58-530118-1	SEATING INSTL/4 PLACE CAM/.	NP	1
	58-530118-7	SEATING INSTL/1 CAM,3 RECLINE/.	NP	1
	58-530108-1	. CHAIR ASSY,PILOTS UPHOLSTERED/CAM BACK/ . . .	1	1
	58-530108-7	. CHAIR ASSY,COPILOTS UPHOLSTERED/CAM BACK/ . .	1	1
	58-530108-9	. CHAIR ASSY,COPILOTS UPHOLSTERED/ROTON BACK/ .	1	1
	96-534073-1	. . FRAME ASSY,PILOTS CHAIR/CAM ADJUSTING/. . .	1	1
	96-534073-5	. . FRAME ASSY,COPILOTS CHAIR/CAM ADJUSTING/. .	1	1
	96-534073-3	. . FRAME ASSY,COPILOTS CHAIR/RECLINING/. . . .	1	1
	58-530026-1	. . . BACK ASSY,PILOTS AND COPILOTS SEAT. . . .	1	1
		/ATTACHING PARTS/		
	NAS221-24	. . . SCREW	2	
	100951X032WF	. . . WASHER/NEXT TO SCREW HEAD/.	2	
	102933D42M0190	. . . SPACER.	2	
	AN960-10L	. . . WASHER.	2	
	22K2-02	. . . NUT,CAP	2	
		——+——		
- 1	58-530026-5	. . . . WELD ASSY,CHAIR BACK.	1	1
- 2	60-530040-1	. . . . ADAPTER	2	1
		/ATTACHING PARTS/		
	AN525-10R14	. . . . SCREW	4	
	AN960-10L	. . . . WASHER.	4	
	MS20364-1032	. . . . NUT	4	
		——+——		
	96-534073-7	. . . FRAME ASSY,CHAIR BOTTOM	1	1
	96-534073-33	. . . . WELD ASSY,FRONT LEG	1	2
- 3	96-534073-57	. . . . WELD ASSY,FRONT LEG	1	3
- 4	96-534073-51	. . . . HANDLE ASSY	1	1
- 5	36-530025-15	. . . . PIN	1	1
- 6	100943ZS027G	. . . . SPRING.	1	1
- 7	AN960-416L	. . . . WASHER.	2	1
- 8	1/16X1/2	. . . . PIN,DRIVLOK/TYPE E/	1	1
- 9	AN3-14A/M/	. . . . BOLT.	1	1
- 10	AN960-10L	. . . . WASHER.	6	1
- 11	118641	. . . . ROLLER.	6	1
- 12	100943ZA016J	. . . . SPRING.	3	1
- 13	102933D4ZJ0190	. . . . SPACER.	3	1
- 14	MS20365-1032	. . . . NUT	1	1
- 15	60-530013-93	. . . . WELD ASSY/SUPERSEDES 60-530013-11/. . .	1	1
		/ATTACHING PARTS/		
	MS171498	. . . . PIN,ROLL.	2	
		——+——		
- 16	36-530025-27	. . . . TUBE,SUPPORT.	1	1
		/ATTACHING PARTS/		
- 17	MS171564	. . . . PIN,ROLL.	2	
		——+——		
- 18	36-530025-13	. . . . FOOT.	2	1
- 19	36-530025-14	. . . . FOOT.	2	1
		/ATTACHING PARTS/		
	AN3-14A/M/	. . . . BOLT/CAM ADJUSTING/	2	
	AN3-15A/M/	. . . . BOLT/RECLINING/	2	
	AN960-10L	. . . . WASHER.	2	
	MS20365-1032	. . . . NUT	2	
		——+——		
- 20	AN3-14A/M/	. . . . BOLT.	2	1
- 21	AN3-14A/M/	. . . . BOLT.	2	1
- 22	102933D4ZJ1000	. . . . SPACER.	2	1
	AN960-10L	. . . . WASHER.	2	1
	MS20365-1032	. . . . NUT	2	1
- 23	60-530039-3	. . . . FRAME,LH SIDE	1	1
- 24	60-530039-4	. . . . FRAME,RH SIDE	1	1

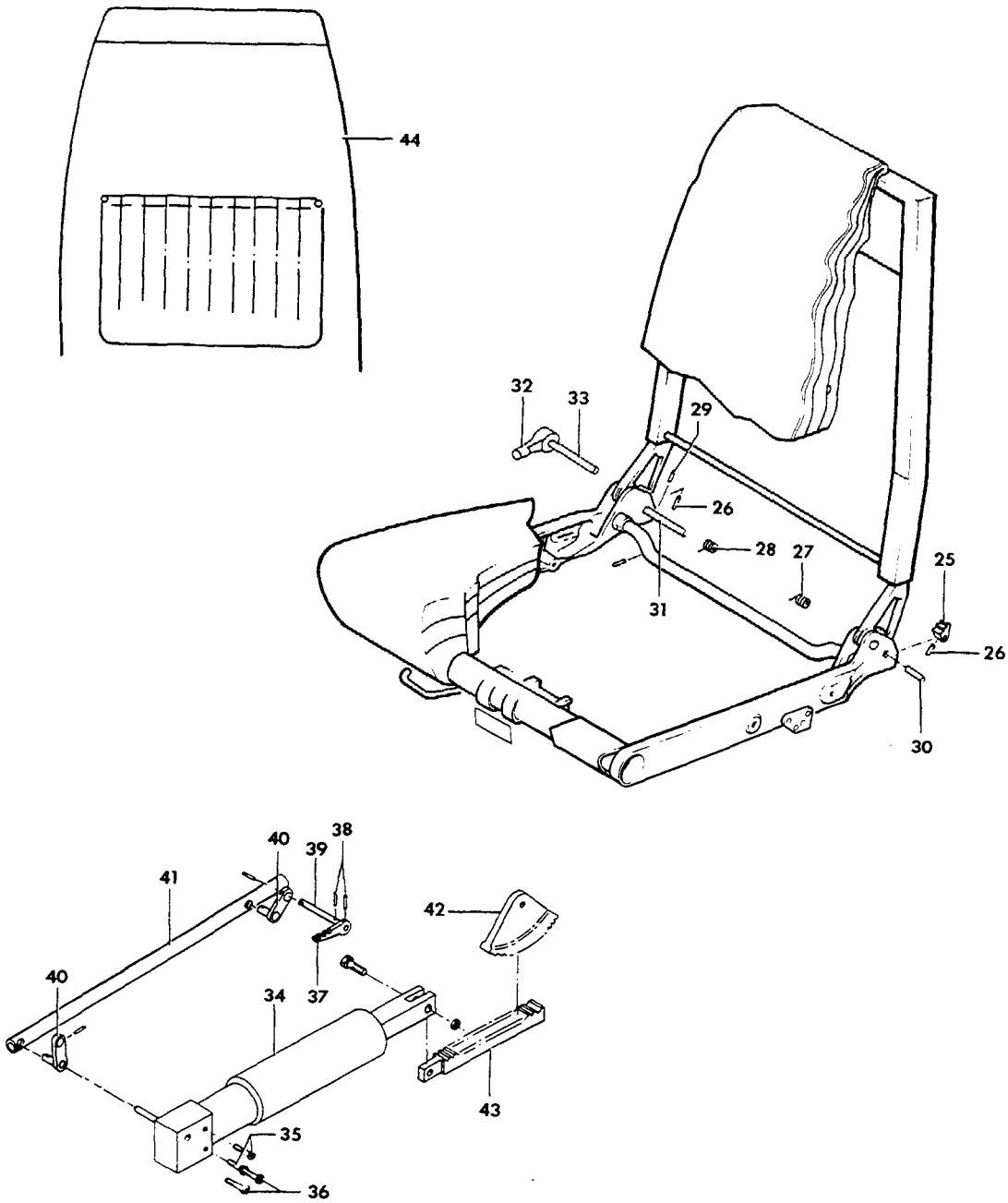

FIGURE 13-40.PILOT AND COPILOT SEATS
/SHEET 2 OF 3 SHEETS/

ATA CODE & INDEX NO.	PART NO.	DESCRIPTION 1 2 3 4 5 6 7	UNITS PER ASSY	USABLE ON CODE
13-40	96-534073-9	. . . SUPPORT INSTL,PILOTS SEAT BACK.	NP	1
	96-534073-10	. . . SUPPORT INSTL,COPILOTS SEAT BACK.	NP	1
		/CAM ADJUSTING/		
- 25	60-530043-5	. . . . CAM/PILOTS & COPILOTS CAM ADJUST CHAIR/	2	1
- 26	MS171539	. . . . PIN,ROLL.	2	1
- 27	60-530046-1	. . . . SPRING,LH TORSION	1	1
- 28	60-530046-2	. . . . SPRING,RH TORSION	1	1
- 29	MS171499	. . . . PIN,SPRING RETAINING ROLL	2	1
- 30	60-530045	. . . . PIN,SEAT BACK LH.	1	1
- 31	60-530013-41	. . . . TUBE/PILOTS & COPILOTS CHAIR/	1	1
	58-530045-1	. . . . HANDLE ASSY,COPILOTS CHAIR.	1	1
	58-530045-2	. . . . HANDLE ASSY,PILOTS CHAIR.	1	1
- 32	58-530045-3	. . . . . HANDLE.	1	1
- 33	58-530046	. . . . . PIN,HANDLE.	1	1
- 34	60-530051-3	. . . ACTUATOR ASSY,COPILOTS CHAIR/RECLINING/ .	1	1
		/ATTACHING PARTS/		
- 35	NAS221-29	. . . SCREW	2	
- 36	NAS221-8	. . . SCREW	2	
	AN960-10L	. . . WASHER.	8	
	MS20365-1032	. . . NUT	4	
		——*——		
- 37	60-530052	. . . HANDLE ASSY,COPILOT CHAIR/RECLINING/. . .	1	4
	60-530052-3	. . . HANDLE ASSY,COPILOT CHAIR/RECLINING/. . .	1	5
		/ATTACHING PARTS/		
- 38	MS171498	. . . PIN,ROLL.	2	
	NAS43D04-18	. . . SPACER.	1	
		——*——		
- 39	96-534073-49	. . . ROD/RECLINE/.	1	1
- 40	96-534073-43	. . . STRAP/RECLINE/.	2	1
		/ATTACHING PARTS/		
	MS171498	. . . PIN,ROLL.	2	
		——*——		
- 41	96-534073-45	. . . TUBE/RECLINE/	1	1
		/ATTACHING PARTS/		
	MS20392-1C19	. . . PIN	2	
	AN960-4L	. . . WASHER.	2	
	AN381-2-7	. . . PIN,COTTER.	2	
		——*——		
	96-534073-47	. . . PLATE/RECLINE/.	2	1
	130906TC-8C065	. . . TUBE/ACTUATOR ASSY PROTECTION/.	1	1
- 42	60-530041-1	. . . GEAR/RECLINE/	1	1
- 43	60-530054-1	. . . RACK,GEAR/RECLINE/.	1	1
		/ATTACHING PARTS/		
	AN4-7A/M/	. . . BOLT.	1	
	MS20365-428	. . . NUT	1	
		——*——		
	58-530108-47	. . SHELL ASSY,PILOTS SEAT BACK/CAM/.	1	1
	58-530108-48	. . SHELL ASSY,COPILOTS SEAT BACK/CAM/.	1	1
	58-530108-49	. . SHELL ASSY,COPILOTS SEAT BACK/ROTON/. . . .	1	1
		/ATTACHING PARTS/		
	NAS387-632-10P	. . SCREW	6	
	NAS391-6P	. . WASHER.	6	
		——*——		
- 44	35-534453-3	. . . SHELL,PILOTS SEAT BACK.	1	1
	35-534453-4	. . . SHELL,COPILOTS SEAT BACK/CAM/	1	1
	35-534453-1	. . . SHELL,COPILOTS SEAT BACK/ROTON/	1	1

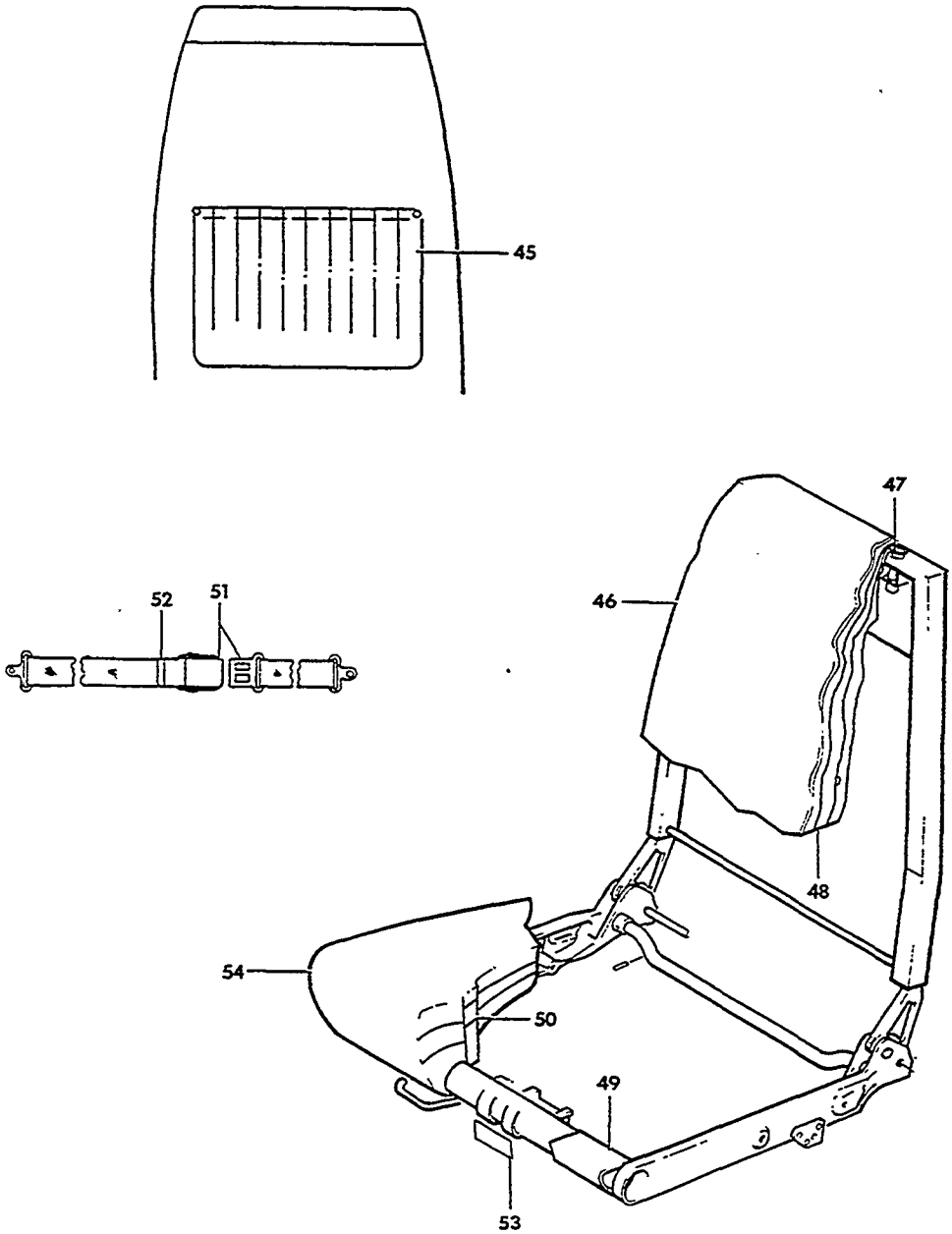

FIGURE 13-40.PILOT AND COPILOT SEATS
/SHEET 3 OF 3 SHEETS/

ATA CODE & INDEX NO.	PART NO.	DESCRIPTION 1 2 3 4 5 6 7	UNITS PER ASSY	USABLE ON CODE
13-40 - 45	58-530108-51	. . . POCKET,SEAT BACK.	1	1
		/ATTACHING PARTS/		
	NAS387-632-10P	. . . SCREW	2	
	NAS391-6P	. . . WASHER.	2	
	MS20365-632	. . . NUT	2	
		----*----		
- 46	58-530108-45	. . COVER ASSY,PILOTS & COPILOTS SEAT BACK. . .	1	1
- 47	130010	. . MOULDING,SEAT BACK HEADREST	2	1
	130010-1	. . MOULDING,SEAT BACK/ALTERNATE FOR 130010/. .	2	1
- 48	58-530080-1	. . CUSHION ASSY,SEAT BACK.	1	1
- 49	36-530023-17	. . EXTENSION,CHAIR BOTTOM.	1	1
		/ATTACHING PARTS/		
	AN530-6R5	. . SCREW	10	
		----*----		
- 50	58-530082-1	. . CUSHION ASSY,SEAT BOTTOM.	1	1
	130498C19-32	. . SEAT BELT ASSY.	1	1
- 51	CS4000W/265-4	. . . BUCKLE ASSY	1	1
	50-534733-1	. . . PLACARD	1	1
- 52	D611A	. . . TIP	1	1
- 53	130569	. . PLATE,SEAT IDENTIFICATION	1	1
		/ATTACHING PARTS/		
	PK65A4-5	. . SCREW	2	
		----*----		
- 54	58-530108-43	. . COVER ASSY,SEAT BOTTOM.	1	1
	58-530041-23	COVER,SEAT BOTTOM/GREEN TENT CLOTH/	2	1
	58-530041-25	COVER,SEAT BACK/GREEN TENT CLOTH/	2	1

CODES OF EFFECTIVITY

1 TC-1403 THRU TC-1607 TE-847 THRU TE-942 EXCEPT TE-938
2 TC-1403 THRU TC-1546 TE-847 THRU TE-912
3 TC-1547 THRU TC-1607 TE-913 THRU TE-942 EXCEPT TE-938
4 TE-847 THRU TE-942 EXCEPT TE-938
5 TC-1403 THRU TC-1607

"END"

25-16-01
GLARESHIELD INSTALLATION
TC-1 THRU TC-190

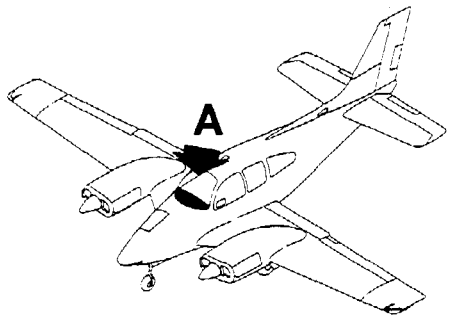

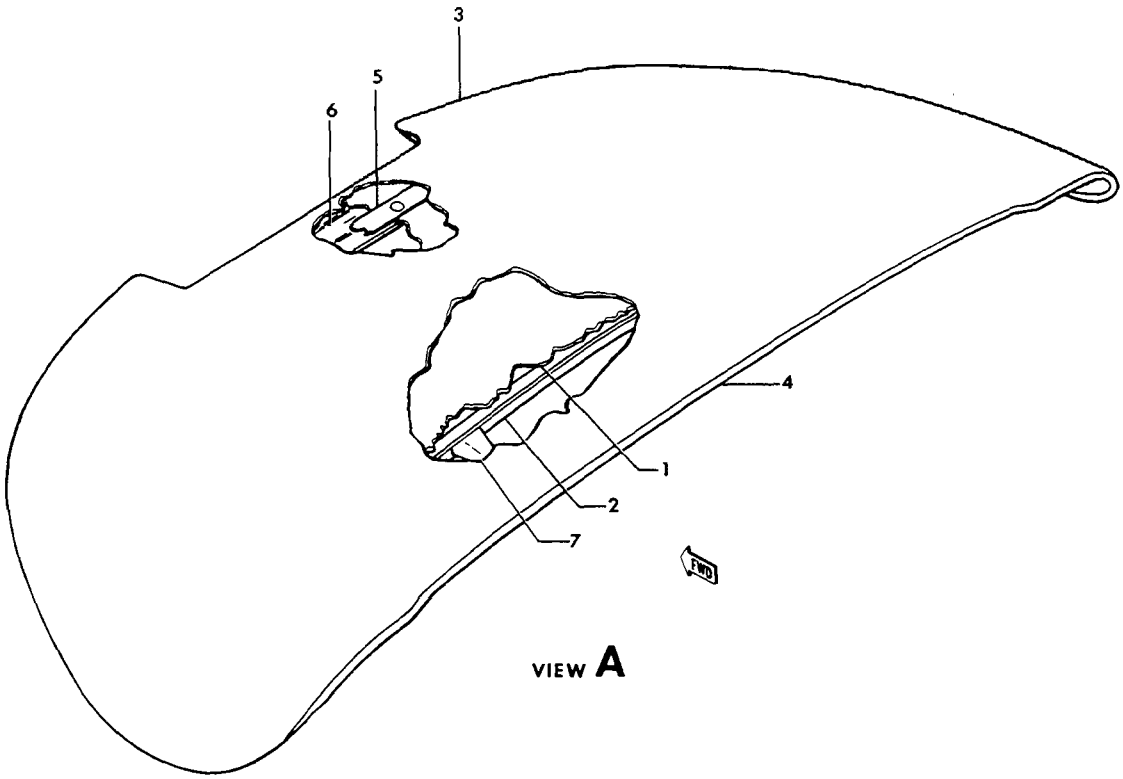

55-324-52

FIGURE 16-01.GLARESHIELD INSTALLATION

ATA CODE & INDEX NO.	PART NO.	DESCRIPTION 1 2 3 4 5 6 7	UNITS PER ASSY	USABLE ON CODE
16-01	95-530011-25	GLARESHIELD INSTL	NP	1
	95-530011-27	. GLARESHIELD ASSY.	1	1
		/ATTACHING PARTS/		
	AN515-8R	. SCREW	5	
	AN960-8	. WASHER.	5	
		----*----		
- 1	95-530011-1	. . DECK,GLARESHIELD.	1	1
- 2	95-530011-7	. . ANGLE	1	1
- 3	95-530011-29	. . COVER	1	1
- 4	95-530011-31	. . COVER	1	1
- 5	95-530011-13	. . STRIP	1	1
- 6	95-530011-15	. . CLIP.	1	1
- 7	95-530011-19	CUP	5	1
	AN931-4-16	GROMMET	2	1
	105798-9	CLAMP	2	1

CODES OF EFFECTIVITY

1 TC-1 THRU TC-190

"END"

25-16-10
GLARESHIELD INSTALLATION
TC-191 THRU TC-1042,TE-1 THRU TE-451

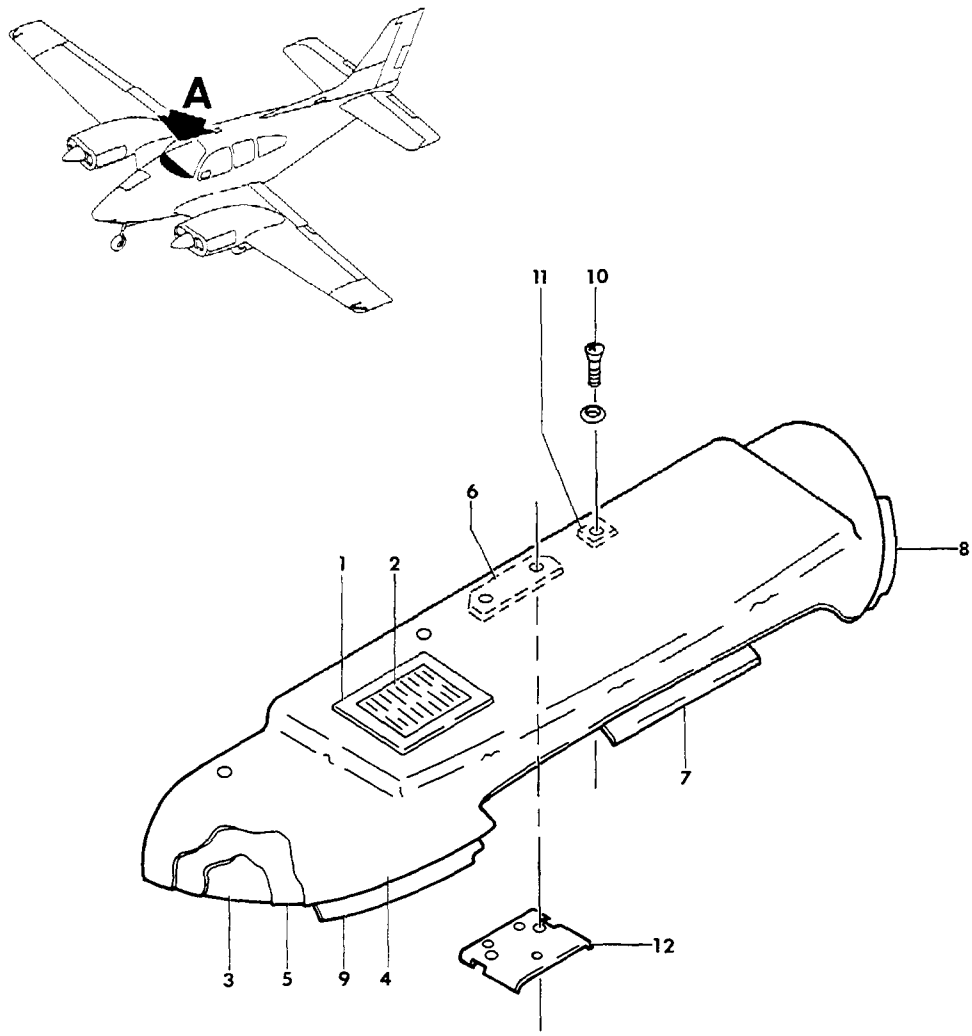

VIEW A

55-324-50

FIGURE 16-10.GLARESHIELD INSTALLATION

ATA CODE & INDEX NO.	PART NO.	DESCRIPTION 1 2 3 4 5 6 7	UNITS PER ASSY	USABLE ON CODE
16-10	96-530013-1	GLARESHIELD INSTALLATION.	NP	1
	96-530013-53	GLARESHIELD INSTALLATION.	NP	2
	96-530013-5	. GLARESHIELD ASSY.	1	1
	96-530013-55	. GLARESHIELD ASSY.	1	2
- 1	96-530013-11	. . RETAINER.	1	3
- 2	96-530013-13	. . GRILL	1	3
- 3	96-530013-73	. . DECK.	1	3
- 4	96-530013-17	. . COVER	1	3
- 5	96-530013-21	. . FILLER.	1	3
- 6	96-530013-59	. . BLOCK	1	2
- 7	95-530014-5	. . ANGLE	1	3
- 8	95-554017-9	. ANGLE,LH.	1	3
- 9	95-554017-10	. ANGLE,RH.	1	3
		/ATTACHING PARTS/		
	AN507-632R	. SCREW	4	
	102933P2ZM0156	. SPACER.	4	
	AN960-6	. WASHER.	4	
		——*——		
- 10	AN507B632-14	. SCREW	5	3
	96-530013-35	. WASHER.	5	3
	NAS1329A06K75	. RIVNUT.	5	3
- 11	96-530013-37	. BLOCK	2	3
- 12	96-530013-45	. BRACKET	1	2

CODES OF EFFECTIVITY

1 TC-191 THRU TC-976
2 TC-977 THRU TC-1042
TE-1 THRU TE-451
3 TC-191 THRU TC-1042
TE-1 THRU TE-451

"END"

25-16-20
GLARESHIELD INSTALLATION
TC-1043 THRU TC-1402,TE-452 THRU TE-767

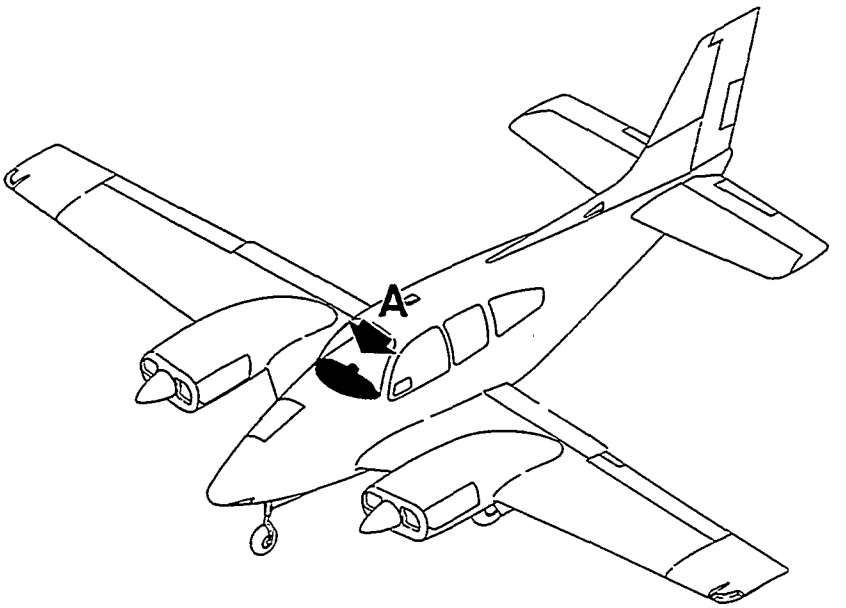

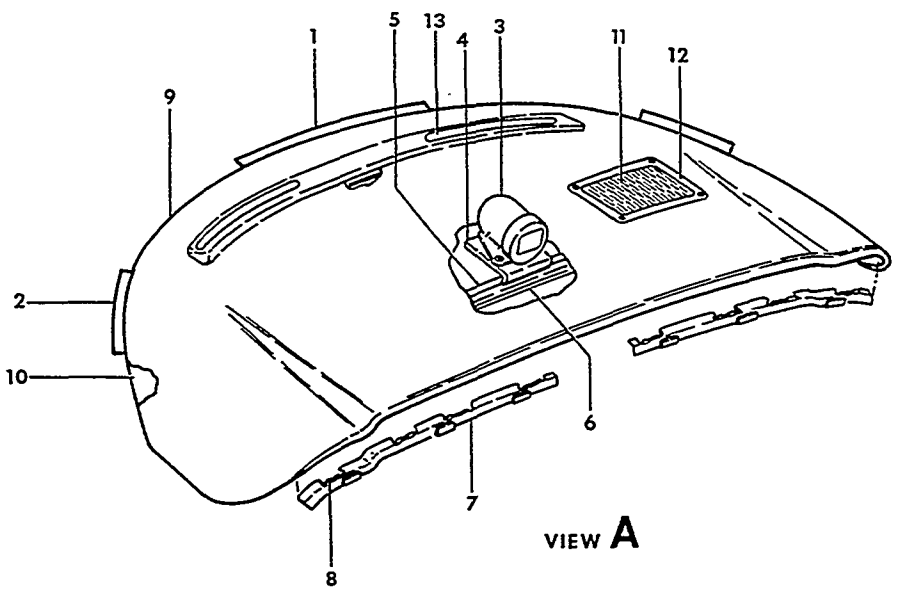

55-324-49

FIGURE 16-20.GLARESHIELD INSTALLATION

ATA CODE & INDEX NO.	PART NO.	DESCRIPTION 1 2 3 4 5 6 7	UNITS PER ASSY	USABLE ON CODE
16-20	96-534075-71	GLARESHIELD INSTL/ALTERNATOR/	NP	1
	96-534075-75	GLARESHIELD INSTL/GENERATOR/	NP	2
- 1	96-534075-33	. SUPPORT,CENTER	1	1
		/ATTACHING PARTS/		
	AN507-632-12R	. SCREW	9	
	AN960-6	. WASHER	9	
	102933P2ZM0250	. SPACER	9	
	MS20365-632	. NUT/SUPERSEDES AN365-632/	9	
		----*----		
- 2	96-534075-35	. SUPPORT,LH	1	1
	96-534075-36	. SUPPORT,RH	1	1
		/ATTACHING PARTS/		
	AN507-632-12R	. SCREW	5	
	AN960-6	. WASHER	5	
	102933P2ZM0250	. SPACER	5	
	MS20365-632	. NUT	5	
		----*----		
- 3	C2400L4P1A-8	. COMPASS/24 VOLTS/	1	1
	C2400L4P1B	. COMPASS/12 VOLTS/	1	2
- 4	96-534075-53	. ANGLE ASSY	1	1
- 5	96-534075-63	. BRACKET ASSY	1	1
		/ATTACHING PARTS/		
	AN515B8-8	. SCREW	4	
	AN960PD8	. WASHER	4	
	AN366DF832	. NUTPLATE	4	
		----*----		
	96-534075-73	. GLARESHIELD ASSY/ALTERNATOR/	1	1
	96-534075-77	. GLARESHIELD ASSY/GENERATOR/	1	2
- 6	96-534075-7	. . ANGLE	1	1
	96-534075-15	. . REFLECTOR ASSY,LH	1	1
	96-534075-16	. . REFLECTOR ASSY,RH	1	1
- 7	96-534075-13	. . . REFLECTOR,LH	1	1
	96-534075-14	. . . REFLECTOR,RH	1	1
	96-534075-21	. . . SPACER	6	1
- 8	4169-143	. . . LAMPHOLDER	8	1
	49-378-627	. . . LAMPHOLDER/ALTERNATE FOR 4169-143/	8	1
	1864	. . . BULB	8	1
	D165-100-2	. . . HOOD,LIGHT	8	1
- 9	96-534075-27	. . COVER	1	1
- 10	96-534075-17	. . DECK/ALTERNATOR/	1	1
	96-534075-5	. . DECK/GENERATOR/	1	2
- 11	96-530013-13	. . GRILL	1	1
- 12	96-530013-11	. . RETAINER,GRILL	1	1
		/ATTACHING PARTS/		
	PK76XZ6	. . SCREW	4	
	A1778-6Z	. . NUT,ANCHOR	4	
		----*----		
	96-554022-5	. . DUCT ASSY	1	1
- 13	96-554022-7	. . . DUCT	1	1
	96-554022-3	. . . TUBE	1	1

CODES OF EFFECTIVITY

1 TC-1043 THRU TC-1402 2 TC-1043 THRU TC-1402
TE-452 THRU TE-767

"END"

25-16-30
GLARESHIELD INSTALLATION
TC-1403 THRU TC-1607
TE-768 THRU TE-942 EXCEPT TE-938

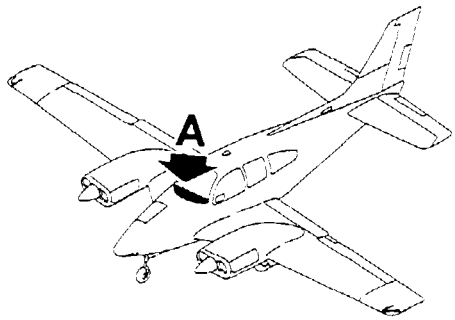

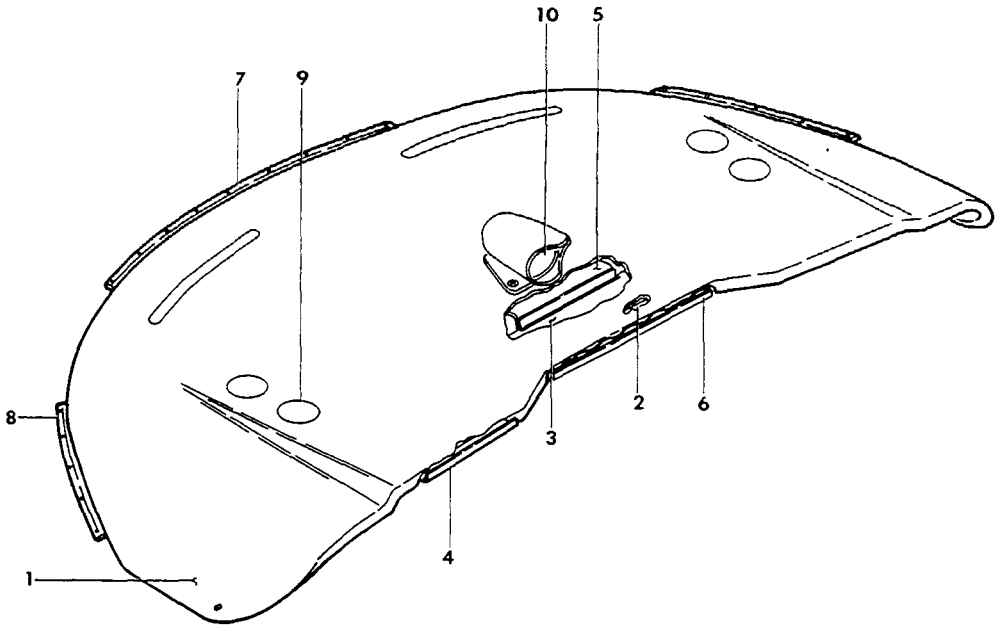

VIEW **A**

55-324-51

FIGURE 16-30.GLARESHIELD INSTALLATION

ATA CODE & INDEX NO.	PART NO.	DESCRIPTION 1 2 3 4 5 6 7	UNITS PER ASSY	USABLE ON CODE
16-30	36-530064-3	GLARESHIELD INSTALLATION.	NP	1
	36-530064-601	. GLARESHIELD ASSY.	1	2
	36-530064-607	. GLARESHIELD ASSY.	1	3
	36-530064-611	. GLARESHIELD ASSY.	1	4
		/ATTACHING PARTS/		
	AN530-4-4	. SCREW	6	
	MS27039-0814	. SCREW	2	
		——+——		
	36-530064-603	. . GLARESHIELD ASSY/BONDED/.	1	5
- 1	36-530064-615	. . GLARESHIELD ASSY/BONDED/.	1	4
- 2	36-530064-49	. . REFLECTOR,LIGHT	1	1
	36-530064-19	. . CLOSURE,CENTER.	1	5
- 3	36-530064-59	. . CLOSURE,CENTER.	1	4
	4169-143	. . LAMPHOLDER.	12	1
	MS25231-313	. . BULB.	12	1
- 4	36-530064-65	. . ANGLE	2	1
- 5	36-530064-57	. . CHANNEL	1	1
- 6	36-530064-67	. . ANGLE	1	1
	36-530064-29	. . COVER,GLARESHIELD	1	1
	58-360000-607	. . HARNESS ASSY.	1	5
	58-360000-609	. . HARNESS ASSY.	1	4
- 7	96-534075-33	. SUPPORT,CENTER.	1	1
- 8	96-534075-35	. SUPPORT,LH.	1	1
	96-534075-36	. SUPPORT,RH.	1	1
		/ATTACHING PARTS/		
	MS24693S30	. SCREW	9	
	102933P2ZM0250	. SPACER.	9	
	AN960-6	. WASHER.	9	
	MS20365-632	. NUT	9	
		——+——		
- 9	XP51162-12	. BUTTON,SCREENED PLUG.	4	1
- 10	C2400L4P1A-B	. COMPASS	1	1
		/ATTACHING PARTS/		
	AN515B8R8	. SCREW	3	
	MS35338-99	. WASHER.	3	
	MS20341-8B	. NUT	3	
		——+——		

CODES OF EFFECTIVITY

1 TC-1403 THRU TC-1607 TE-768 THRU TE-942 EXCEPT TE-938
2 TE-768 THRU TE-818
3 TE-819 THRU TE-831
4 TC-1403 THRU TC-1607 TE-832 THRU TE-942 EXCEPT TE-938
5 TE-768 THRU TE-831

"END"

25-20-01
PASSENGER SEATS
TC-1 THRU TC-190

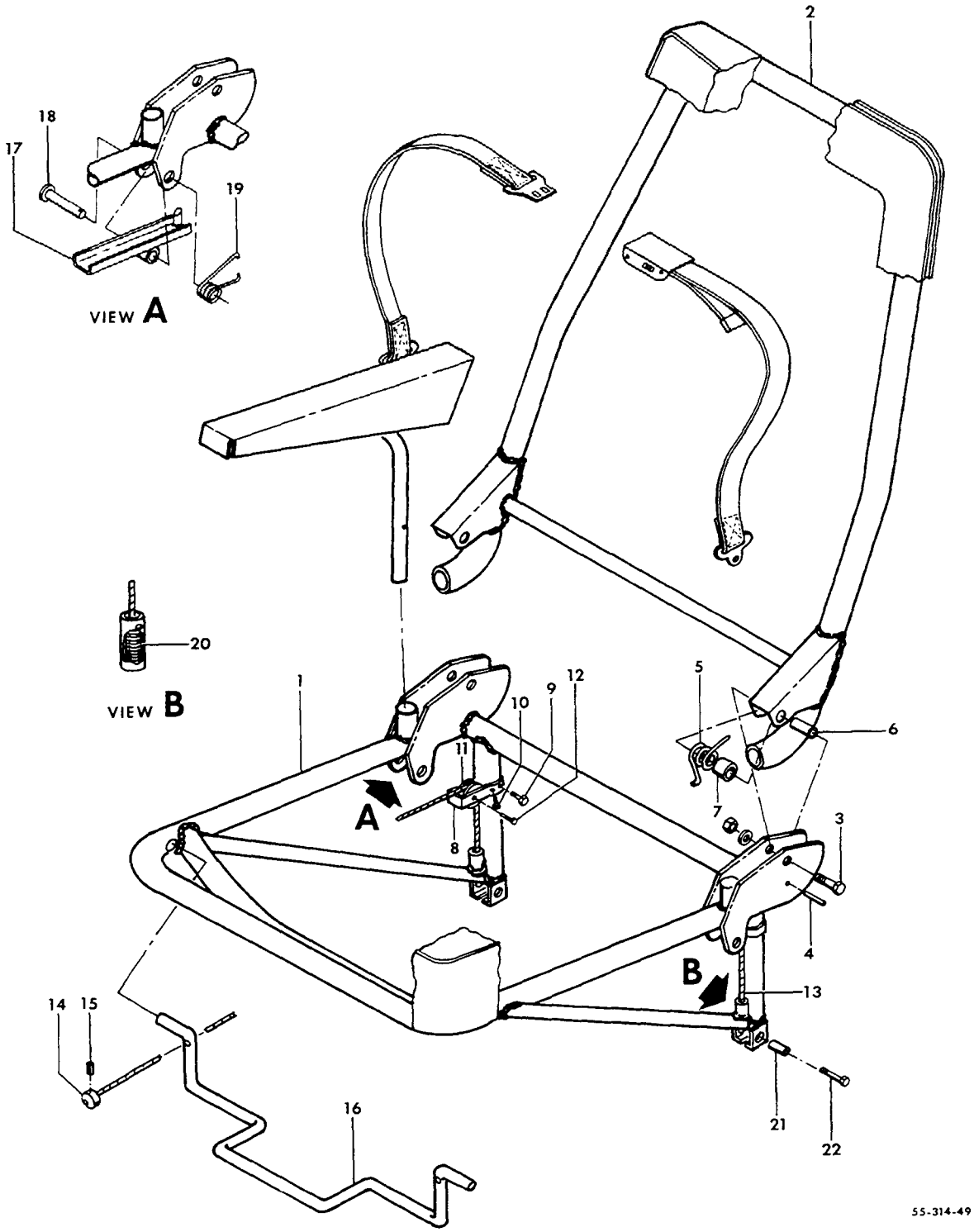

FIGURE 20-01.PASSENGER SEATS
/SHEET 1 OF 2 SHEETS/

ATA CODE & INDEX NO.	PART NO.	DESCRIPTION 1 2 3 4 5 6 7	UNITS PER ASSY	USABLE ON CODE
20-01	96-530001-636	SEAT ASSY,REAR LH	1	1
	96-530001-637	SEAT ASSY,REAR RH	1	1
	95-534018-601	. STRUCTURE ASSY,REAR SEAT LH	1	1
	95-534018-602	. STRUCTURE ASSY,REAR SEAT RH	1	1
- 1	95-534018-63	. . WELD ASSY,REAR SEAT BOTTOM.	1	1
- 2	95-534018-69	. . WELD ASSY,REAR SEAT BACK.	1	1
		/ATTACHING PARTS/		
- 3	AN24-28A	. . BOLT.	2	
- 4	MS20392-1-37	. . PIN,FLAT HEAD/SUPERSEDES AN392-37	3	
	MS24665-132	. . PIN,COTTER/SUPERSEDES AN380-2-2/.	3	
- 5	95-534019	. . SPRING,REAR SEAT RECLINING.	2	
- 6	100801X6-1060	. . SPACER.	2	
- 7	95-534017-27	. . SPACER,PHENOLIC	2	
	AN960-416L	. . WASHER.	2	
	AN365-416	. . NUT	2	
		----*----		
- 8	95-534018-39	. . BRACKET,PULLEY.	1	1
		/ATTACHING PARTS/		
- 9	AN3-13A	. . BOLT.	2	
- 10	PK78XZ4-4	. . SCREW	2	
	AN960-10	. . WASHER.	2	
	AN365-1032	. . NUT	2	
		----*----		
- 11	95-534018-43	. . PULLEY,REAR SEAT CABLE.	2	1
		/ATTACHING PARTS/		
- 12	AN392-17	. . PIN,FLAT HEAD	1	
	AN960-6	. . WASHER.	1	
	MS24665-132	. . PIN,COTTER/SUPERSEDES AN380-2-1/.	1	
		----*----		
- 13	95-534018-47	. . CABLE ASSY,REAR SEAT.	2	1
- 14	187247	. . STOP,CABLE.	2	1
		/ATTACHING PARTS/		
- 15	AN515-6	. . SCREW	1	
		----*----		
- 16	95-534018-57	. . HANDLE,REAR SEAT FWD.	1	1
- 17	95-534018-91	. . HANDLE ASSY,REAR SEAT AFT	1	1
		/ATTACHING PARTS/		
- 18	MS20392-5-53	. . PIN	1	
	AN960-616L	. . WASHER.	1	
	MS24665-283	. . PIN,COTTER/SUPERSEDES AN380-3-3	1	
		----*----		
- 19	95-534023-1	. . SPRING,LH REAR SEAT AFT HANDLE.	1	1
	95-534023	. . SPRING,RH REAR SEAT AFT HANDLE.	1	1
- 20	111504ZL0102-13	. . SPRING,REAR SEAT CABLE.	2	1
- 21	100696S-ZN020	. . SPACER,REAR SEAT FOOT	3	1
- 22	AN4A14	. . BOLT.	3	1
	AN960-416	. . WASHER.	3	1
	AN365-428	. . NUT	3	1

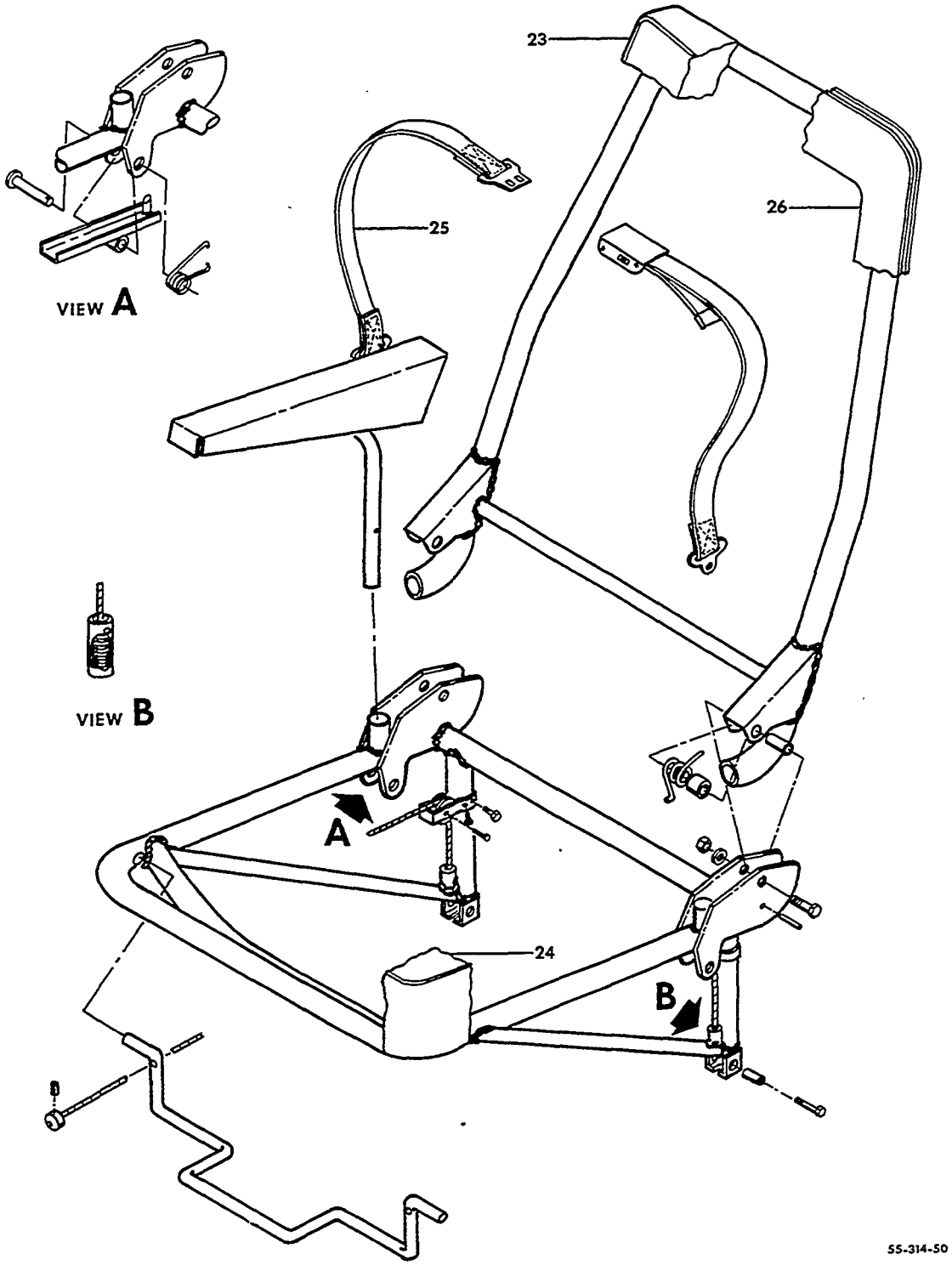

FIGURE 20-01.PASSENGER SEATS
/SHEET 2 OF 2 SHEETS/

SUB-SECT UNIT & ITEM NO.	PART NO.	DESCRIPTION 1 2 3 4 5 6 7	UNITS PER ASSY	USABLE ON CODE
20-01 - 23	95-530002-37	. CUSHION,SEAT BACK	2	1
	AN227-6B	. BUTTON.	10	1
	AN227-7B	. SOCKET.	10	1
- 24	95-530002-41	. CUSHION,SEAT BOTTOM	2	1
	AN230G32	. GROMMET	4	1
	AN230W32	. GROMMET	4	1
- 25	95-534017-35	. BELT ASSY,SEAT.	2	1
		/ATTACHING PARTS/		
	AN4-5A	. BOLT.	2	
	102933D5ZM0190	. SPACER.	2	
	AN936B416	. WASHER.	2	
		---*---		
- 26	96-534010-601	PANEL,SEAT BACK/BLUE/USED WITHOUT CARD TABLE/ .	2	1
	96-534010-602	PANEL,SEAT BACK/GRAY/USED WITHOUT CARD TABLE/ .	2	1
	96-534010-603	PANEL,SEAT BACK/BEIGE/USED WITHOUT CARD TABLE/.	2	1
	96-534010-604	PANEL,SEAT BACK/GREEN/USED WITHOUT CARD TABLE/.	2	1
	96-530012-601	PANEL,SEAT BACK/BLUE/USED WITH CARD TABLE/. . .	2	1
	96-530012-602	PANEL,SEAT BACK/GRAY/USED WITH CARD TABLE/. . .	2	1
	96-530012-603	PANEL,SEAT BACK/BEIGE/USED WITH CARD TABLE/ . .	2	1
	96-530012-604	PANEL,SEAT BACK/GREEN/USED WITH CARD TABLE/ . .	2	1
	R 95-534030-15	FRAME ASSY,LH ARMREST	1	1
	R 95-534030-16	FRAME ASSY,RH ARMREST	1	1

CODES OF EFFECTIVITY

1 TC-1 THRU TC-190

25-20-10
PASSENGER SEATS
TC-191 THRU TC-1298,TE-1 THRU TE-451

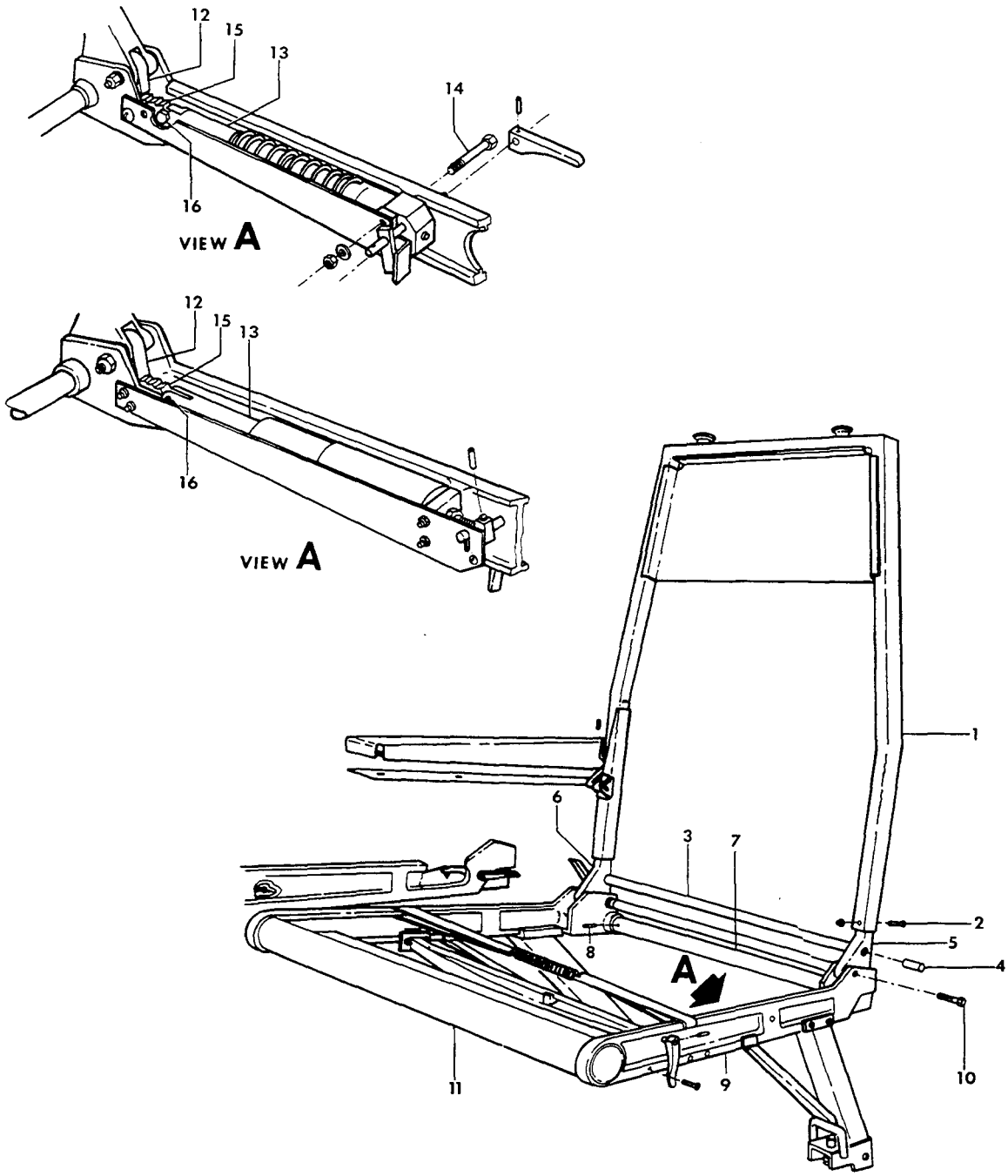

55-314-46

FIGURE 20-10. PASSENGER SEATS
/SHEET 1 OF 3 SHEETS/

SUB-SECT UNIT & ITEM NO.	PART NO.	DESCRIPTION 1 2 3 4 5 6 7	UNITS PER ASSY	USABLE ON CODE
20-10	96-534013-1	SEAT ASSY,LH REAR	1	2
	35-534425-3	SEAT ASSY,LH REAR	1	3
	35-534425-21	SEAT ASSY,LH REAR	1	4
	96-534013-2	SEAT ASSY,RH REAR	1	2
	35-534425-4	SEAT ASSY,RH REAR	1	3
	35-534425-22	SEAT ASSY,RH REAR	1	4
	96-534014-1	. CHAIR ASSY,LH	1	1
	96-534014-2	. CHAIR ASSY,RH	1	1
	18-534013-5	. . FRAME ASSY,LH	1	1
	18-534013-6	. . FRAME ASSY,RH	1	1
	18-534013-39	. . . BACK ASSY,CHAIR	1	1
- 1	18-534013-13	. . . . WELD ASSY,CHAIR BACK.	1	1
		/ATTACHING PARTS/		
- 2	AN525-10R22	. . . . SCREW	4	
	MS20365-1032	. . . . NUT	4	
		——*——		
- 3	18-534013-15	. . . . TUBE,CHAIR BACK	1	1
		/ATTACHING PARTS/		
- 4	MS171688	. . . . PIN,ROLL.	2	
		——*——		
- 5	18-534016-1	. . . . FORGING,CHAIR BACK LH	1	1
- 6	18-534016-2	. . . . FORGING,CHAIR BACK RH	1	1
		/ATTACHING PARTS/		
	AN24-34A/M/	. . . . BOLT.	1	
	AN24-38A/M/	. . . . BOLT.	1	
	AN960-416	. . . . WASHER.	2	
	AN960-416L	. . . . WASHER.	2	
	22K2-048	. . . . NUT,CAP	2	
		——*——		
	18-534013-43	. . . FRAME ASSY,LH BOTTOM.	1	1
	18-534013-44	. . . FRAME ASSY,RH BOTTOM.	1	1
- 7	18-534013-17	. . . . TUBE,CHAIR BOTTOM	1	1
		/ATTACHING PARTS/		
- 8	MS171534	. . . . PIN,ROLL.	2	
		——*——		
- 9	18-534015-1	. . . . SIDE,CHAIR BOTTOM LH.	1	1
	18-534015-2	. . . . SIDE,CHAIR BOTTOM RH.	1	1
		/ATTACHING PARTS/		
- 10	AN4-16A	. . . . BOLT.	2	
	AN960-416	. . . . WASHER.	2	
	AN960-416L	. . . . WASHER.	2	
	22K2-048	. . . . NUT	2	
		——*——		
- 11	18-534013-27	. . . . TUBE,CHAIR BOTTOM	1	1
- 12	18-534013-51	. . . . GEAR.	1	1
- 13	R 18-380008	. . . . LOCK,SEAT BACK ADJUSTING.	1	1
		/ATTACHING PARTS/		
- 14	AN3-17A	. . . . BOLT.	2	
	AN960-10	. . . . WASHER.	2	
	MS20365-1032	. . . . NUT	2	
		——*——		
- 15	18-534024-1	. . . . RACK.	1	1
		/ATTACHING PARTS/		
- 16	AN4-12A	. . . . BOLT.	1	
		——*——		
	R AN501A10	. . . . SCREW,SEAT STOP	1	1
	MS20365-1032	. . . . NUT	1	1

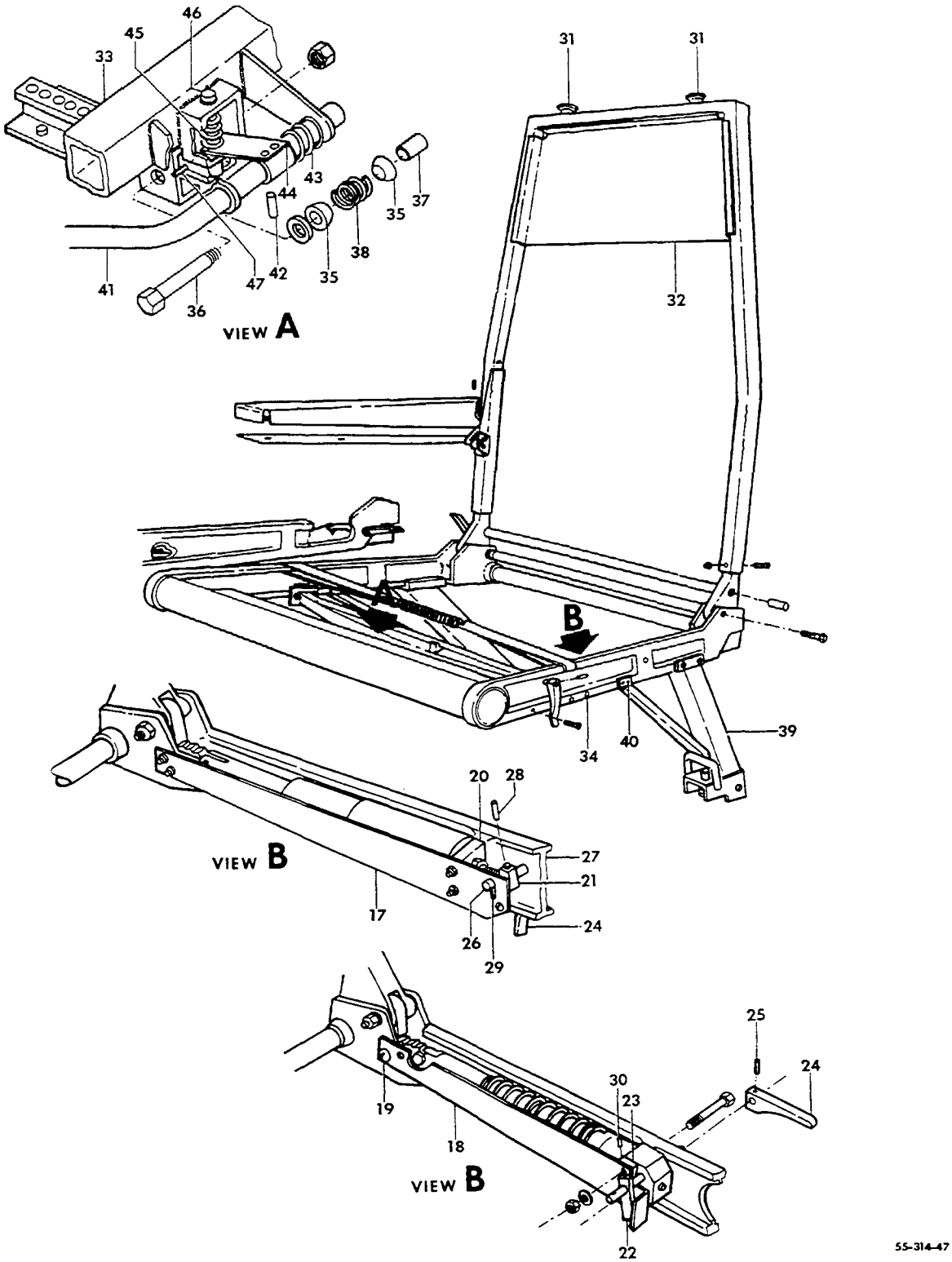

FIGURE 20-10.PASSENGER SEATS
/SHEET 2 OF 3 SHEETS/

ATA CODE & INDEX NO.	PART NO.	DESCRIPTION 1 2 3 4 5 6 7	UNITS PER ASSY	USABLE ON CODE
20-10 - 17	18-534013-31	STRAP,LH & RH SEAT.	1	5
- 18	18-534013-89	STRAP,LH SEAT	1	6
	18-534013-90	STRAP,RH SEAT	1	6
		/ATTACHING PARTS/		
- 19	AN26-9A	BOLT.	1	
	AN960-616	WASHER.	2	
	MS20365-624	NUT	1	
- 20	18-534013-29	BLOCK	1	5
- 21	18-534013-7	BLOCK	1	5
- 22	18-534013-121	STOP.	1	6
- 23	18-534013-91	SPACER.	1	6
- 24	18-534013-149	HANDLE,CHAIR BACK RELEASE	1	1
		/ATTACHING PARTS/		
	100801A14-0375	SPACER.	1	
- 25	MS171498	PIN,ROLL.	1	
- 26	18-534013-69	PIN	1	5
- 27	100801A14-0375	SPACER.	1	5
- 28	MS171498	PIN,ROLL.	1	5
- 29	MS171500	PIN,ROLL.	1	5
- 30	MS171498	PIN,ROLL.	1	6
- 31	130010	FITTING,HEADREST.	2	1
- 32	33-534027-11	COVER,CHAIR BACK.	1	1
- 33	96-534014-35	WELD ASSY,LH & RH SEAT FWD FOOT	1	1
		/ATTACHING PARTS/		
- 34	AN525-10R	SCREW	4	
	MS20365-1032	NUT	4	
- 35	118641	ROLLER,LH & RH SEAT	6	1
		/ATTACHING PARTS/		
- 36	AN3A	BOLT.	3	
- 37	NAS43D03-16	SPACER.	3	
- 38	100943ZA016J	SPRING,SEAT ROLLER.	3	
	AN960-10	WASHER.	3	
	MS20365-1032	NUT	3	
	AN525-10R	SCREW,SEAT AFT FOOT	2	1
	MS20365-1032	NUT,SEAT AFT FOOT	2	1
- 39	96-534014-47	WELD ASSY,LH LEG.	1	1
	96-534014-48	WELD ASSY,RH LEG.	1	1
		/ATTACHING PARTS/		
- 40	AN525-10R	SCREW	3	
	MS20365-1032	NUT	3	
- 41	96-534014-85	HANDLE,LH CHAIR ADJUSTMENT FWD.	1	1
	96-534014-83	WELD ASSY,RH CHAIR ADJUSTMENT FWD HANDLE.	1	1
		/ATTACHING PARTS/		
- 42	MS171498	PIN,ROLL.	2	
- 43	100943ZJ108D	SPRING.	1	1
- 44	96-534014-69	WELD ASSY,SEAT ADJUSTMENT	1	1
- 45	100943ZS023G	SPRING.	1	1
	100951X063WZ	WASHER.	2	1
- 46	60-530013-49	PIN,SEAT ADJUSTMENT	1	1
- 47	1/16X1/2	PIN,DRIVLOK/TYPE E/	2	1

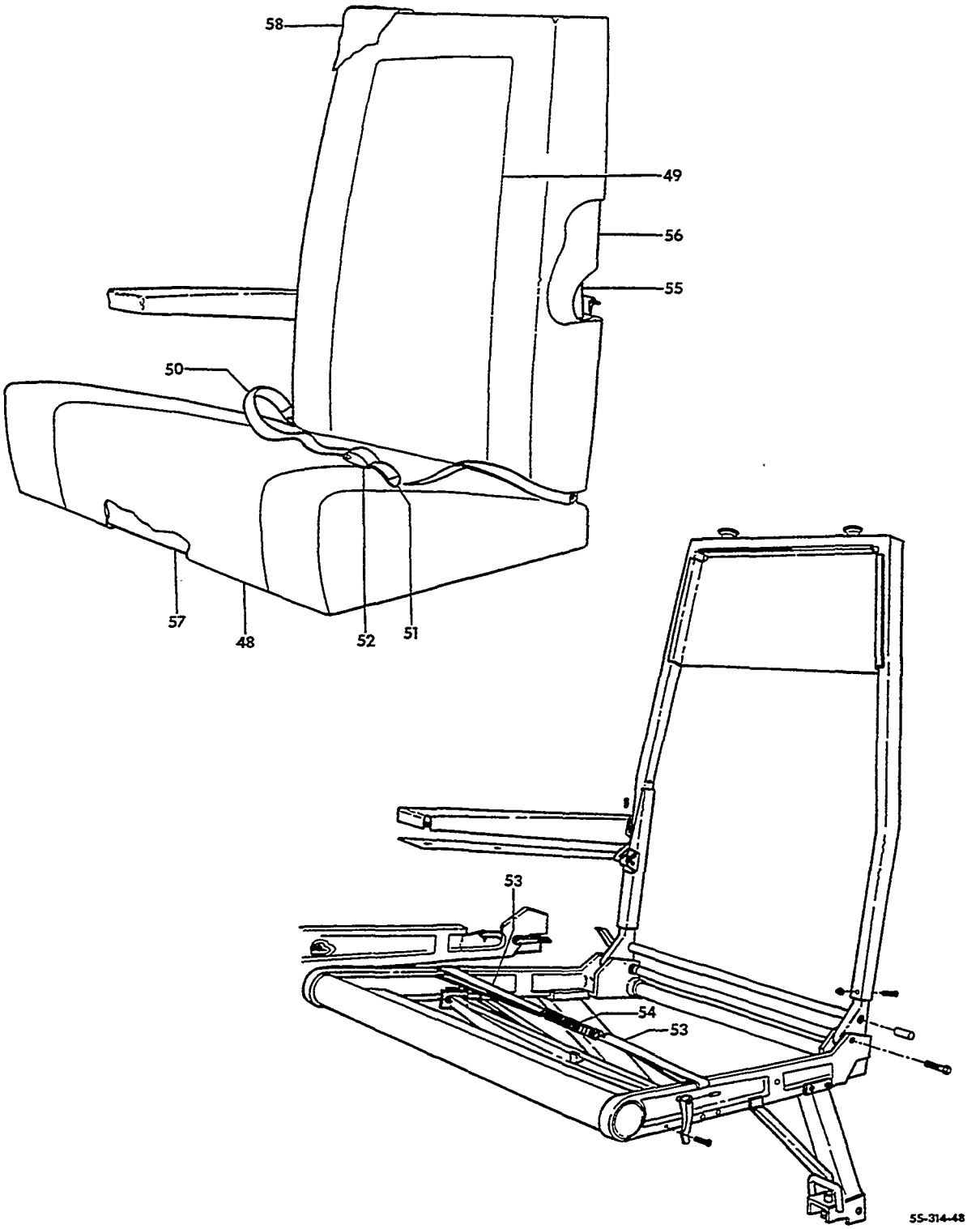

FIGURE 20-10.PASSENGER SEATS
/SHEET 3 OF 3 SHEETS/

ATA CODE & INDEX NO.	PART NO.	DESCRIPTION 1 2 3 4 5 6 7	UNITS PER ASSY	USABLE ON CODE
20-10	96-534013-601	. UPHOLSTERY ASSY,LH REAR SEAT.	1	2
	35-534425-603	. UPHOLSTERY ASSY,LH REAR SEAT.	1	3
	35-534425-607	. UPHOLSTERY ASSY,LH REAR SEAT.	1	4
	96-534013-602	. UPHOLSTERY ASSY,RH REAR SEAT.	1	2
	35-534425-604	. UPHOLSTERY ASSY,RH REAR SEAT.	1	3
	35-534425-608	. UPHOLSTERY ASSY,RH REAR SEAT.	1	4
- 48	96-534013-19	. . PANEL,SEAT BOTTOM INSERT.	1	2
	35-534425-29	. . PANEL,SEAT BOTTOM INSERT.	1	4
	35-534425-13	. . COVER ASSY,SEAT BOTTOM.	1	3
	35-534425-25	. . COVER ASSY,SEAT BOTTOM.	1	7
- 49	96-534013-17	. . PANEL,SEAT BACK INSERT.	1	2
	35-534425-27	. . PANEL,SEAT BACK INSERT.	1	4
	35-534425-11	. . COVER ASSY,SEAT BACK.	1	3
	35-534425-23	. . COVER ASSY,SEAT BACK.	1	7
	96-534013-25	. . WIRE.	1	1
	33-534021-3	. . STRAP	1	1
- 50	130498A19-33	. . BELT ASSY,SEAT.	1	1
		/ATTACHING PARTS/		
	AN24-18A/M/	. . BOLT.	2	
	100801X6-0813	. . SPACER.	2	
	102933D5ZM0190	. . SPACER.	2	
	AN960-416	. . WASHER.	2	
	22K2-048	. . NUT,CAP	2	
		——*——		
- 51	D611A	. . . TIP,SEAT BELT	1	1
- 52	FDK2707	. . . BUCKLE ASSY	1	1
- 53	18-534013-77	. STRAP,SEAT BOTTOM	4	9
- 54	35-534157	. SPRING,SEAT BOTTOM SUPPORT.	2	9
- 55	50-534318-9	. FRAME,SEAT BACK	1	1
- 56	96-534016-1	. CUSHION ASSY,BACK	1	1
	18-534020-3	. PAD,SEAT BACK	1	8
- 57	96-534027	. CUSHION ASSY,SEAT BOTTOM.	1	2
	35-534426-1	. CUSHION ASSY,SEAT BOTTON LH	1	8
	35-534426-2	. CUSHION ASSY,SEAT BOTTOM RH	1	8
- 58	96-534025-601	SEAT COVERS/OPTIONAL/FOUR COVERS/	1	1
	96-534025-602	SEAT COVERS/OPTIONAL/FIVE COVERS/	1	1

CODES OF EFFECTIVITY

1	TC-191 THRU TC-1298 TE-1 THRU TE-451	2	TC-191 THRU TC-501
3	TC-502 THRU TC-1298	4	TE-1 THRU TE-451
5	TC-191 THRU TC-698	6	TC-699 THRU TC-1298 TE-1 THRU TE-451
7	TC-225 THRU TC-501	8	TC-502 THRU TC-1298 TE-1 THRU TE-451
9	TC-191 THRU TC-709		

"END"

25-20-20
PASSENGER SEATS
TC-1299 THRU TC-1607
TE-452 THRU TE-942 EXCEPT TE-938

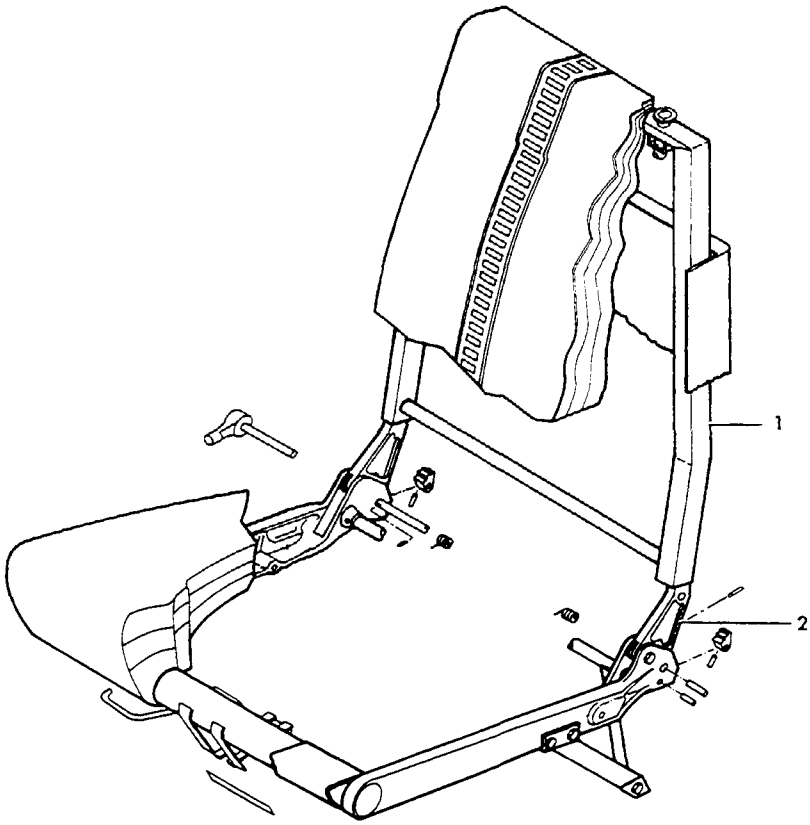

BS5-314-7

FIGURE 20-20.PASSENGER SEATS
/SHEET 1 OF 4 SHEETS/

ATA CODE & INDEX NO.	PART NO.	DESCRIPTION 1 2 3 4 5 6 7	UNITS PER ASSY	USABLE ON CODE
20-20	96-534071-1	SEATING INSTL,PASSENGER	NP	1
	96-534071-5	SEATING INSTL/1 CAM,3 RECLINE/	NP	2
	58-530040-5	SEATING INSTL/ALL CAM/	NP	2
	58-530118-1	SEATING INSTL/CAM ADJUSTABLE/	NP	3
	58-530118-7	SEATING INSTL/ROTON ADJUSTABLE/	NP	3
	58-530040-5	SEATING INSTL/STANDARD/CAM ADJUSTABLE/	NP	4
	58-530118-1	SEATING INSTL/CAM ADJUSTABLE/	NP	5
	96-534071-5	SEATING INSTL/OPTIONAL/ROTON ADJUSTABLE/	NP	4
	58-530118-7	SEATING INSTL/ROTON ADJUSTABLE/	NP	5
	96-534072-5	. CHAIR ASSY,LH PASSENGER UPHOLSTERED/ROTON/	1	1
	96-534099-7	. CHAIR ASSY,LH PASSENGER UPHOLSTERED/ROTON/	1	2
	96-534099-19	. CHAIR ASSY,LH PASSENGER UPHOLSTERED/CAM/	1	2
	58-530108-15	. CHAIR ASSY,LH PASSENGER UPHOLSTERED/CAM/	1	3
	58-530108-17	. CHAIR ASSY,LH PASSENGER UPHOLSTERED/ROTON/	1	3
	96-534099-19	. CHAIR ASSY,LH PASSENGER UPHOLSTERED/CAM/	1	4
	58-530108-15	. CHAIR ASSY,LH PASSENGER UPHOLSTERED/CAM/	1	5
	96-534099-7	. CHAIR ASSY,LH PASSENGER UPHOLSTERED/ROTON/	1	4
	58-530108-17	. CHAIR ASSY,LH PASSENGER UPHOLSTERED/ROTON/	1	5
	96-534072-7	. CHAIR ASSY,RH PASSENGER UPHOLSTERED/ROTON/	1	1
	96-534099-11	. CHAIR ASSY,RH PASSENGER UPHOLSTERED/ROTON/	1	2
	96-534099-21	. CHAIR ASSY,RH PASSENGER UPHOLSTERED/CAM/	1	2
	58-530108-29	. CHAIR ASSY,RH PASSENGER UPHOLSTERED/CAM/	1	3
	58-530108-31	. CHAIR ASSY,RH PASSENGER UPHOLSTERED/ROTON/	1	3
	96-534099-21	. CHAIR ASSY,RH PASSENGER UPHOLSTERED/CAM/	1	4
	58-530108-29	. CHAIR ASSY,RH PASSENGER UPHOLSTERED/CAM/	1	5
	96-534099-11	. CHAIR ASSY,RH PASSENGER UPHOLSTERED/ROTON/	1	4
	58-530108-31	. CHAIR ASSY,RH PASSENGER UPHOLSTERED/ROTON/	1	5
	96-534074-1	. . FRAME ASSY,LH/ROTON/	1	6
	96-534074-43	. . FRAME ASSY,LH/CAM/	1	7
	96-534074-3	. . FRAME ASSY,RH/ROTON/	1	6
	96-534074-45	. . FRAME ASSY,RH/CAM/	1	7
	60-530042-15	. . . BACK ASSY,LH CHAIR/ORDER 36-530043-3/	1	8
	60-530042	. . . BACK ASSY,RH CHAIR/ORDER 36-530043-3/	1	8
	36-530043-3	. . . BACK ASSY,CHAIR	1	9
	58-530026-1	. . . BACK ASSY,CHAIR	1	7
		/ATTACHING PARTS/		
	NAS221-24	. . . BOLT	2	
	100951X032WF	. . . WASHER	2	
	102933D4ZM0190	. . . SPACER	2	
	AN960-10L	. . . WASHER	2	
	22K2-02	. . . NUT	2	
		——+——		
	60-530042-1	. . . . WELD ASSY,CHAIR BACK	1	8
	36-530043-7	. . . . WELD ASSY,CHAIR BACK	1	9
- 1	58-530026-5	. . . . WELD ASSY,SEAT BACK	1	7
	60-530042-13	. . . . SPACER	1	8
- 2	60-530040-1	. . . . ADAPTER	2	6
		/ATTACHING PARTS/		
	AN525-10R14	. . . . SCREW	4	6
	AN525-10R22	. . . . SCREW	2	8
	AN960-10L	. . . . WASHER	4	6
	MS20364-1032	. . . . NUT	4	6
		——+——		
	60-530042-9	. . . . TUBE	1	8
		/ATTACHING PARTS/		
	MS171684	. . . . PIN,ROLL	2	
		——+——		

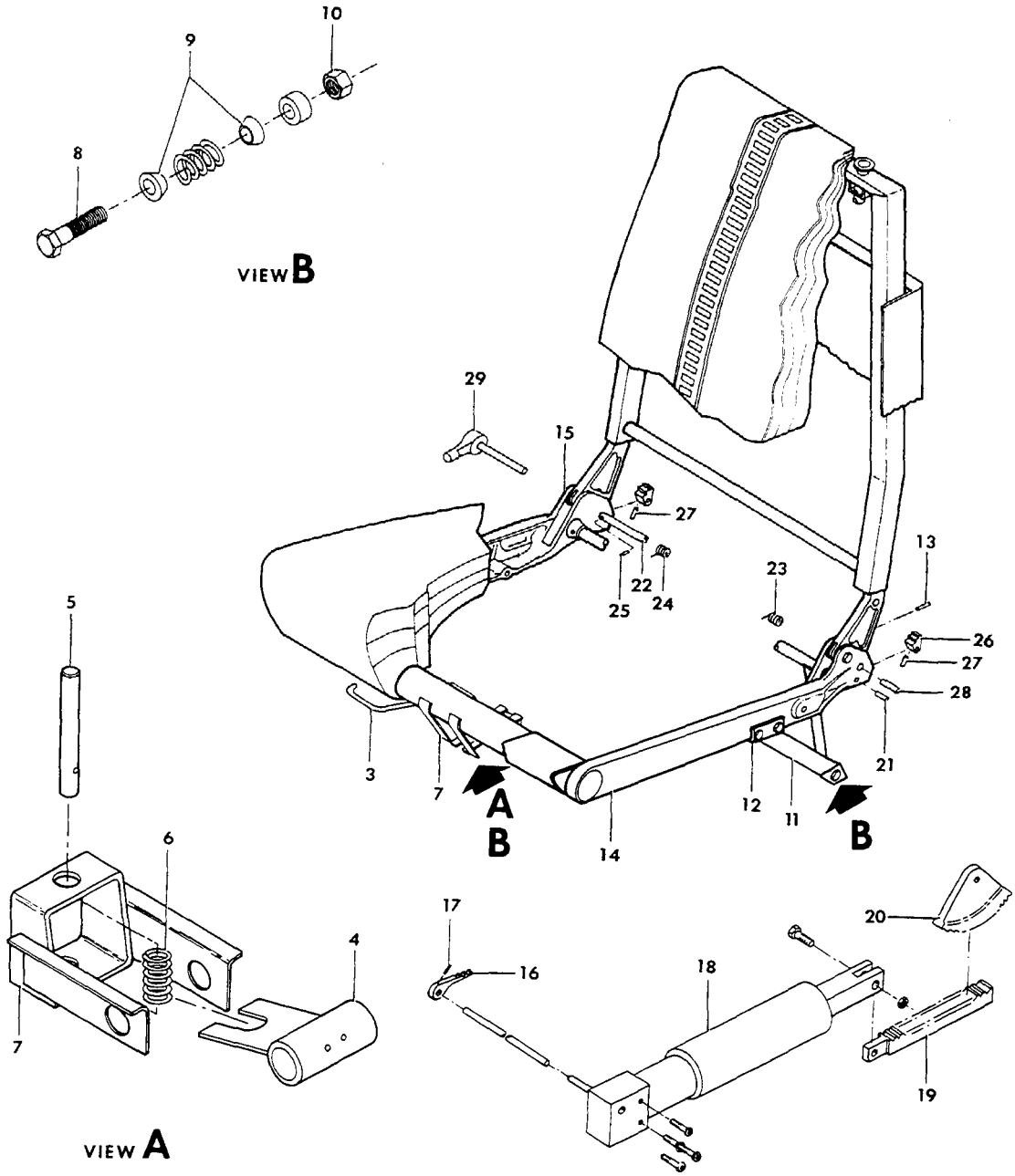

FIGURE 20-20. PASSENGER SEATS
/SHEET 2 OF 4 SHEETS/

ATA CODE & INDEX NO.	PART NO.	DESCRIPTION 1 2 3 4 5 6 7	UNITS PER ASSY	USABLE ON CODE
20-20 - 3	96-534074-23	. . . HANDLE,LH PASSENGER CHAIR	1	6
	96-534074-19	. . . HANDLE,RH PASSENGER CHAIR	1	6
- 4	60-530013-11	. . . WELD ASSY	1	6
		/ATTACHING PARTS/		
	MS171498	. . . PIN,ROLL.	2	
		——*——		
	96-534074-11	. . . FRAME ASSY,SEAT BOTTOM.	1	6
- 5	36-530025-15	. . . . PIN	1	6
- 6	100943ZS027G	. . . . SPRING.	1	6
	1/16X1/2	. . . . PIN,ROLL/TYPE E/.	1	6
	AN960-416L	. . . . WASHER.	2	6
- 7	96-534074-15	. . . . WELD ASSY,FRONT LEG	1	6
- 8	AN3-14A/M/	. . . . BOLT.	3	6
	AN960-10L	. . . . WASHER.	6	6
- 9	118641	. . . . ROLLER.	6	6
	100943ZA016J	. . . . SPRING.	3	6
	102933D4ZJ0190	. . . . SPACER.	3	6
- 10	MS20365-1032	. . . . NUT	3	6
- 11	96-534074-21	. . . . WELD ASSY,REAR LEG.	1	6
		/ATTACHING PARTS/		
- 12	AN3-14A/M/	. . . . BOLT.	4	
	AN960-10L	. . . . WASHER.	4	
	MS20365-1032	. . . . NUT	4	
- 13	MS171534	. . . . PIN,ROLL.	2	
		——*——		
- 14	60-530039-3	. . . . FRAME,LH SIDE	1	6
- 15	60-530039-4	. . . . FRAME,RH SIDE	1	6
- 16	60-530052-3	. . . HANDLE/ROTON ADJUSTING ONLY/.	1	6
- 17	MS171498	. . . PIN,ROLL.	1	6
- 18	60-530051-1	. . . ACTUATOR ASSY/ROTON ADJUSTING/.	1	6
		/ATTACHING PARTS/		
	NAS221-8	. . . SCREW	2	
	NAS221-30	. . . SCREW	2	
	AN960-10L	. . . WASHER.	4	
	MS20365-1032	. . . NUT	4	
		——*——		
- 19	60-530054-1	. . . RACK ASSY,GEAR/ROTON ADJUSTING ONLY/. . .	1	6
		/ATTACHING PARTS/		
	AN4-7A/M/	. . . BOLT.	1	
	MS20365-428	. . . NUT	1	
		——*——		
- 20	60-530041-1	. . . GEAR/ROTON ADJUSTING ONLY/.	1	6
- 21	MS171532	. . . PIN,ROLL.	2	6
	96-534073-9	. . . SUPPORT INSTL,LH BACK/CAM ADJUSTING ONLY/	NP	6
	96-534073-10	. . . SUPPORT INSTL,RH BACK/CAM ADJUSTING ONLY/	NP	6
- 22	60-530013-41	. . . . TUBE.	1	6
- 23	60-530046-1	. . . . SPRING,LH	1	6
- 24	60-530046-2	. . . . SPRING,RH	1	6
- 25	MS171499	. . . . PIN,SPRING RETAINING.	2	6
- 26	60-530043	. . . . CAM	2	6
- 27	MS171539	. . . . PIN,ROLL.	2	6
- 28	60-530045	. . . . PIN,OUTBD	1	6
- 29	58-530045-1	. . . . HANDLE ASSY,LH.	1	6
	58-530045-2	. . . . HANDLE ASSY,RH.	1	6

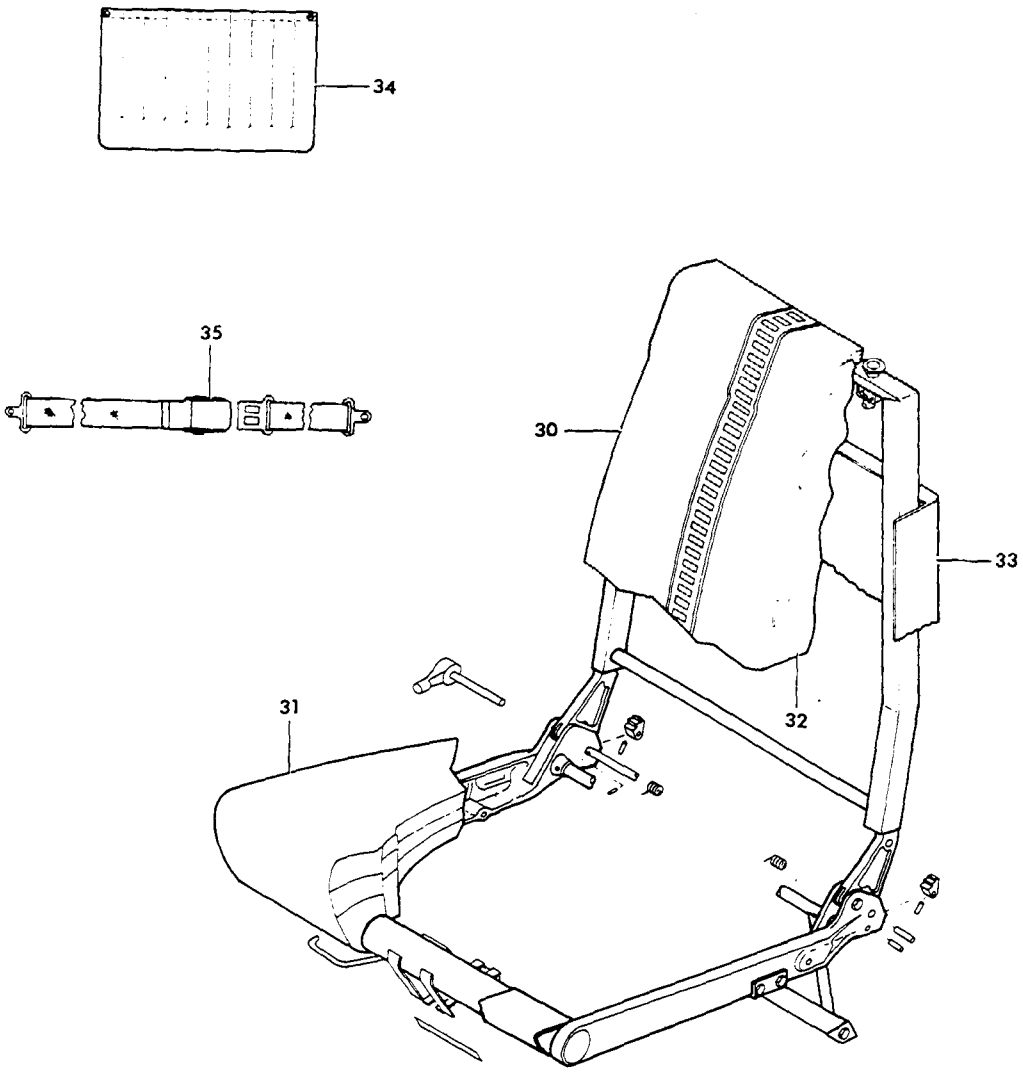

55-314-51

FIGURE 20-20. PASSENGER SEATS
/SHEET 3 OF 4 SHEETS/

ATA CODE & INDEX NO.	PART NO.	DESCRIPTION 1 2 3 4 5 6 7	UNITS PER ASSY	USABLE ON CODE
20-20	96-534072-11	. . COVER ASSY,BACK	1	1
	96-534099-31	. . COVER ASSY,BACK	1	10
- 30	58-530108-45	. . COVER ASSY,BACK	1	11
	96-534072-15	. . COVER ASSY,SEAT BOTTOM.	1	1
	96-534099-29	. . COVER ASSY,SEAT BOTTOM.	1	2
	96-534099-29	. . COVER ASSY,LH SEAT BOTTOM	1	12
	96-534099-30	. . COVER ASSY,RH SEAT BOTTOM	1	12
	96-534099-45	. . COVER ASSY,SEAT BOTTOM.	1	13
- 31	58-530108-43	. . COVER ASSY,SEAT BOTTOM.	1	14
	58-530080-1	. . CUSHION ASSY,SEAT BACK.	1	15
- 32	58-530082-3	. . CUSHION ASSY,SEAT BOTTOM.	1	15
	96-534099-23	. . SHELL ASSY/ROTON/	1	10
	58-530108-49	. . SHELL ASSY/ROTON/	1	14
	96-534099-25	. . SHELL ASSY/CAM/	1	2
	96-534099-25	. . SHELL ASSY,LH/CAM/.	1	4
	96-534099-26	. . SHELL ASSY,RH/CAM/.	1	4
	58-530108-47	. . SHELL ASSY,LH/CAM/.	1	11
	58-530108-48	. . SHELL ASSY,RH/CAM/.	1	11
		/ATTACHING PARTS/		
	NAS387-6-10P	. . SCREW	6	
	NAS391-6P	. . WASHER.	6	
		——*——		
	35-534453-1	. . . SHELL/ROTON/.	1	7
	35-534453-3	. . . SHELL/CAM/.	1	2
- 33	35-534453-3	. . . SHELL,LH/CAM/	1	15
	35-534453-4	. . . SHELL,RH/CAM/	1	15
- 34	96-534099-35	. . . POCKET ASSY	1	10
	58-530108-51	. . . POCKET ASSY	1	11
		/ATTACHING PARTS/		
	NAS384-6-6P	. . . SCREW	2	10
	NAS387-632-10P	. . . SCREW	2	11
	NAS391-6P	. . . WASHER.	2	6
	MS20365-632	. . . NUT	2	11
		——*——		
	130498C19-32	. . BELT ASSY,SAFETY.	1	6
- 35	CS4000W/265-4	. . . BUCKLE ASSY	1	6
	50-534733-1	. . . PLACARD,BUCKLE.	1	6
	D611A	. . . TIP	1	6

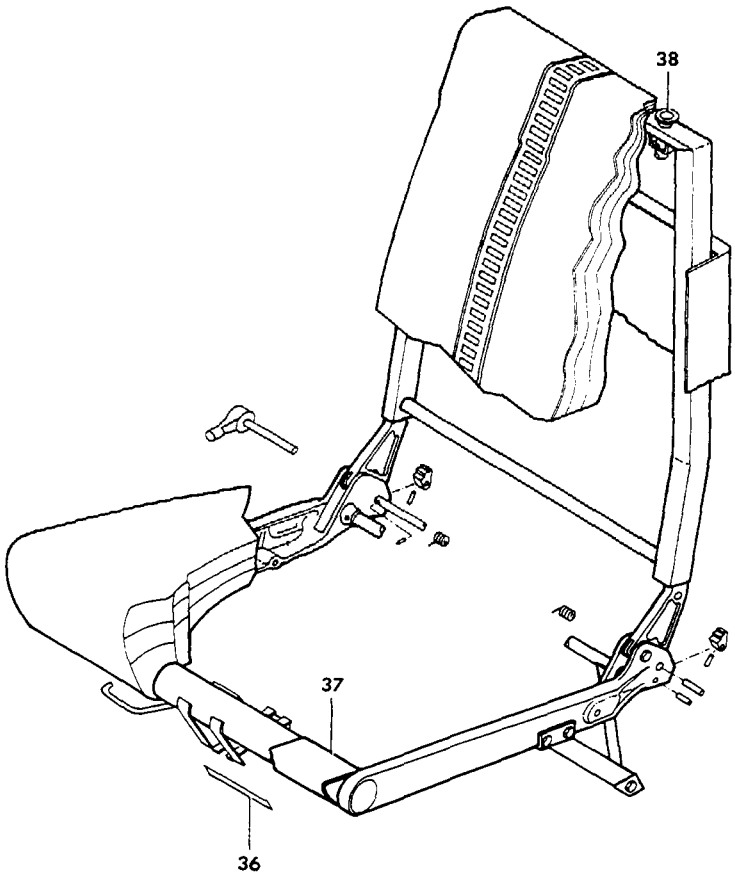

B55-314-9

FIGURE 20-20.PASSENGER SEATS
/SHEET 4 OF 4 SHEETS/

ATA CODE & INDEX NO.	PART NO.	DESCRIPTION 1 2 3 4 5 6 7	UNITS PER ASSY	USABLE ON CODE
20-20 - 36	130569	. . PLATE,SEAT IDENTIFICATION . . . . . /ATTACHING PARTS/	1	6
	PK65A4-5	. . SCREW	2	
		----*----		
- 37	36-530023-17	. . EXTENSION . . . . . /ATTACHING PARTS/	1	6
	AN530-6R5	. . SCREW	10	
		----*----		
- 38	130010	. . MOULDING,HEADREST INSERT.	2	6
	58-530041-27	COVER,RH SEAT BOTTOM/GREEN TENT CLOTH/.	1	2
	58-530041-28	COVER,LH SEAT BOTTOM/GREEN TENT CLOTH/.	1	2
	58-530041-23	COVER,SEAT BOTTOM/GREEN TENT CLOTH/	1	15
	58-530041-25	COVER,SEAT BACK/GREEN TENT CLOTH/	1	15

CODES OF EFFECTIVITY

1 TE-452 THRU TE-767
2 TE-768 THRU TE-846
3 TE-847 THRU TE-942 EXCEPT TE-938
4 TC-1299 THRU TC-1402
5 TC-1403 THRU TC-1607
6 TC-1299 THRU TC-1607 TE-452 THRU TE-942 EXCEPT TE-938
7 TC-1299 THRU TC-1607 TE-768 THRU TE-942 EXCEPT TE-938
8 TE-452 THRU TE-594
9 TE-595 THRU TE-767
10 TC-1299 THRU TC-1402 TE-768 THRU TE-846
11 TC-1403 THRU TC-1607 TE-847 THRU TE-942 EXCEPT TE-938
12 TC-1299 THRU TC-1333
13 TC-1334 THRU TC-1402
14 TC-1403 THRU TC-1607 TE-847 THRU TE-942 EXCEPT TE-938
15 TC-1299 THRU TC-1607 TE-847 THRU TE-942 EXCEPT TE-938

"END"

25-21-01
FIFTH SEAT
TC-1 THRU TC-640

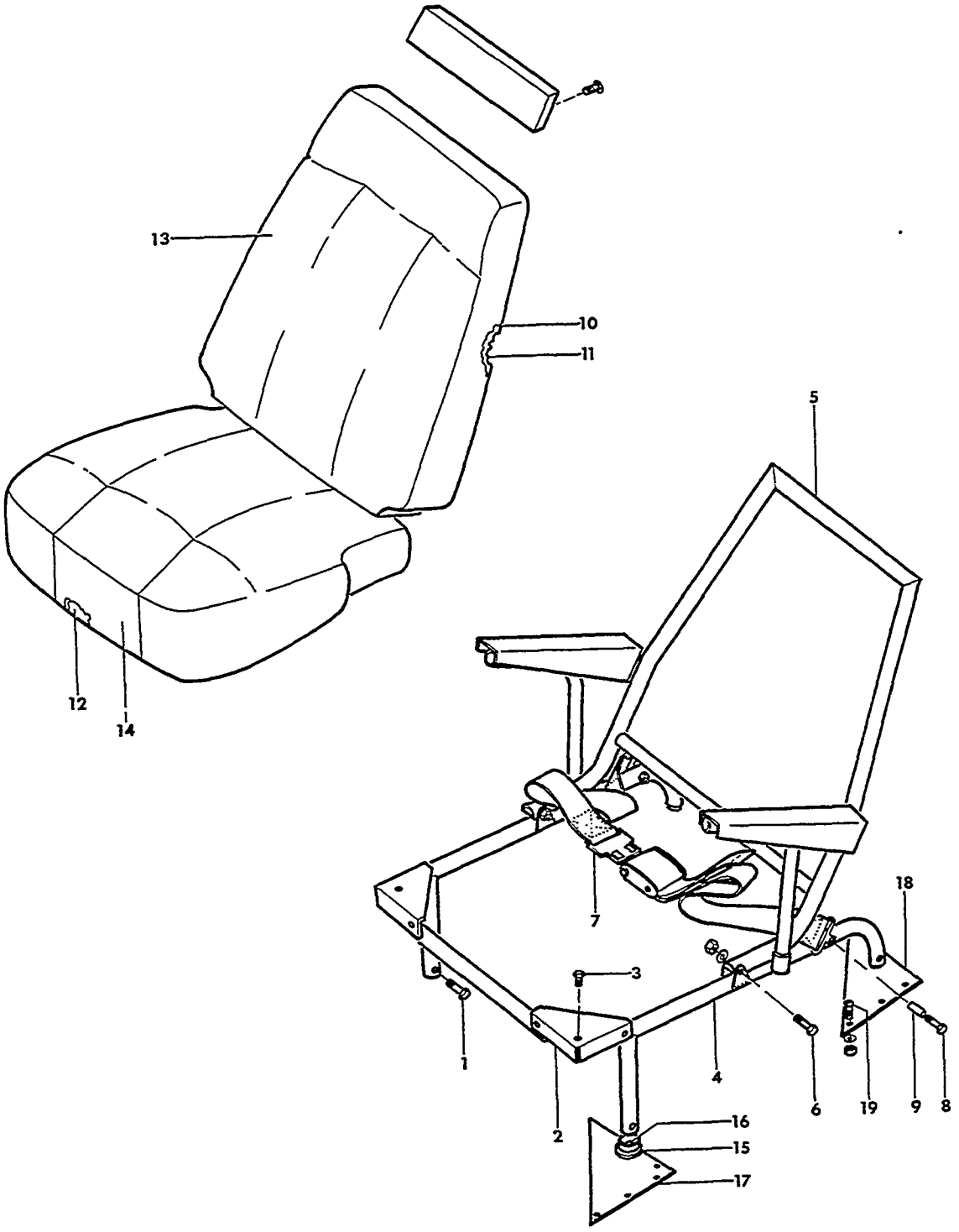

FIGURE 21-01.FIFTH SEAT

ATA CODE & INDEX NO.	PART NO.	DESCRIPTION 1 2 3 4 5 6 7	UNITS PER ASSY	USABLE ON CODE
21-01	95-534022-616	SEAT ASSY,FIFTH	1	1
	95-534022-620	SEAT ASSY,FIFTH	1	2
		/ATTACHING PARTS/		
- 1	AN525-10-16	SCREW	4	
	AN960-10	WASHER	4	
	MS20365-1032	NUT	4	
		——*——		
- 2	95-534022-91	BRACKET	2	3
		/ATTACHING PARTS/		
- 3	AN530-6R4	SCREW	3	
		——*——		
- 4	95-534022-21	WELD ASSY,SEAT BOTTOM	1	4
- 5	95-534022-615	WELD ASSY,SEAT BACK	1	4
		/ATTACHING PARTS/		
- 6	AN3A	BOLT	2	
	AN960-10L	WASHER	2	
	AN365-1032	NUT	2	
		——*——		
- 7	95-534017-35	BELT ASSY,SEAT	1	4
		/ATTACHING PARTS/		
- 8	AN4A	BOLT	2	
- 9	102933D5ZM0190	SPACER	2	
	AN960-416L	WASHER	2	
	AN365-428	NUT	2	
		——*——		
- 10	96-534010-601	UPHOLSTERY ASSY,SEAT BACK/BLUE/	1	1
	96-534010-602	UPHOLSTERY ASSY,SEAT BACK/GRAY/	1	1
	96-534010-603	UPHOLSTERY ASSY,SEAT BACK/BEIGE/	1	1
	96-534010-604	UPHOLSTERY ASSY,SEAT BACK/GREEN/	1	1
- 11	95-534022-69	CUSHION,SEAT BACK	1	5
	18-534020-3	PAD,BACKING	1	3
	96-534016-3	FOAM	1	3
	95-534022-73	CUSHION,SEAT BOTTOM	1	5
- 12	96-534027	CUSHION,SEAT BOTTOM	1	3
- 13	96-534013-17	PANEL,UPHOLSTERY/OPTIONAL COLOR/	1	6
- 14	96-534013-19	PANEL,UPHOLSTERY/OPTIONAL COLOR/	1	6
- 15	95-534022-65	WELD ASSY,SEAT ATTACH	4	4
		/ATTACHING PARTS/		
- 16	AN6	BOLT	1	
		——*——		
- 17	95-534022-623	PLATE ASSY,FWD LH	1	4
	95-534022-603	PLATE ASSY,FWD RH	1	4
- 18	95-534022-622	PLATE ASSY,AFT LH	1	4
	95-534022-605	PLATE ASSY,AFT RH	1	4
		/ATTACHING PARTS/		
- 19	NAS221	SCREW	6	
	AN960-10L	WASHER	6	
	AN365-1032	NUT	6	
		——*——		

CODES OF EFFECTIVITY

1	TC-1 THRU TC-501	2	TC-502 THRU TC-640
3	TC-191 THRU TC-640	4	TC-1 THRU TC-640
5	TC-1 THRU TC-190	6	TC-191 THRU TC-501

"END"

25-21-10
FOLDING FIFTH AND SIXTH SEAT
TC-238 THRU TC-640

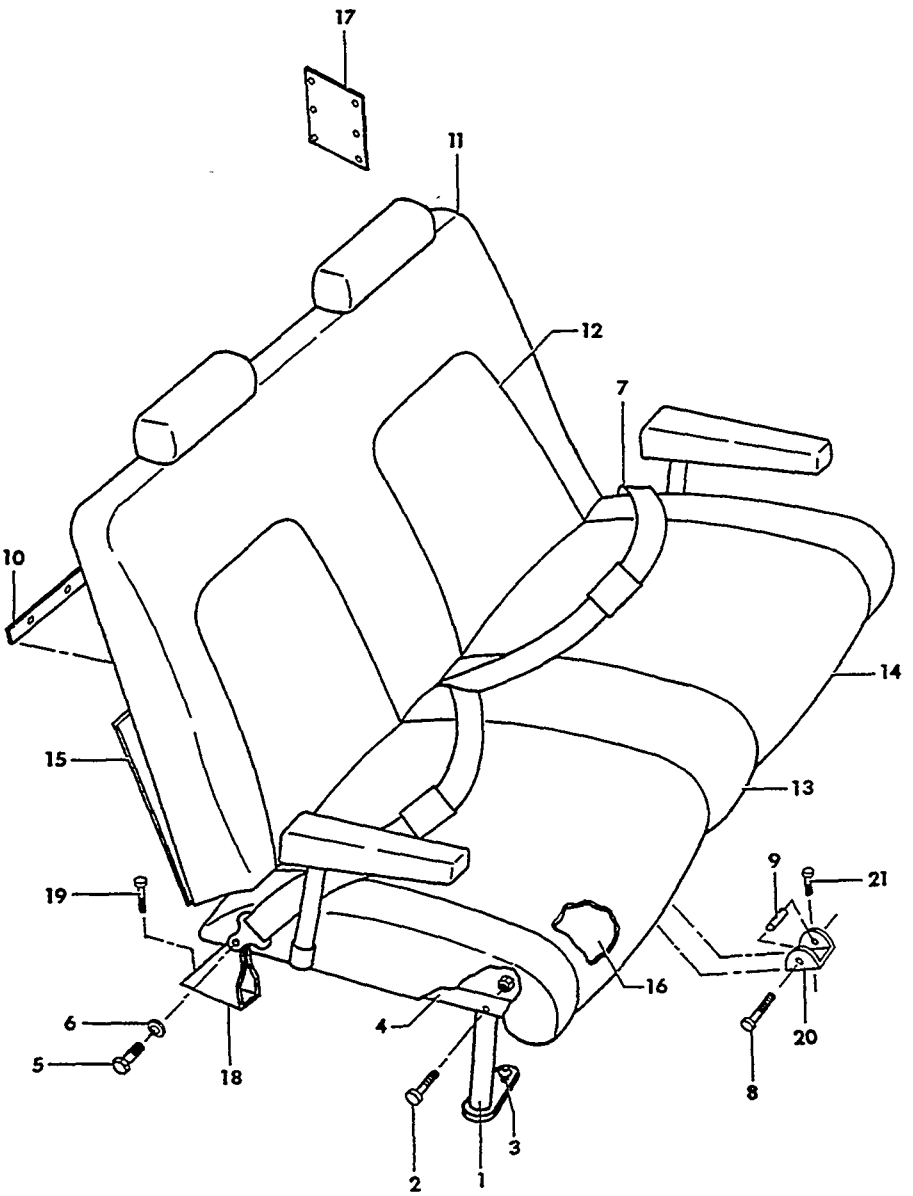

55-314-53

FIGURE 21-10.FOLDING FIFTH AND SIXTH SEAT

ATA CODE & INDEX NO.	PART NO.	DESCRIPTION 1 2 3 4 5 6 7	UNITS PER ASSY	USABLE ON CODE
21-10	96-534039-601	SEAT ASSY,FOLDING FIFTH & SIXTH	1	1
- 1	96-534038-9	. LEG ASSY.	2	1
		/ATTACHING PARTS/		
- 2	NAS464-56A32	. BOLT.	1	
	AN960-416	. WASHER.	1	
	MS20365-428	. NUT	1	
- 3	W98293-4-410	. STUD.	1	
	99785-2	. PIN	1	
- 4	96-534038-7	. WELD ASSY,SEAT BOTTOM	1	1
		/ATTACHING PARTS/		
- 5	AN4-17	. BOLT.	2	
	AN960-416	. WASHER.	4	
- 6	102933D5ZM0190	. SPACER.	2	
	MS20365-428	. NUT	2	
- 7	96-534039-23	. BELT ASSY,SEAT.	2	1
		/ATTACHING PARTS/		
- 8	AN4-15	. BOLT.	1	
	AN960-416	. WASHER.	2	
- 9	100696X-ZN100	. SPACER.	1	
	MS20365-428	. NUT	1	
- 10	96-534039-13	. STRIP	1	1
	96-534051-59	. BAR,SEAT SUPPORT.	1	1
	96-534051-33	. WELD ASSY,LH.	1	1
	96-534051-34	. WELD ASSY,RH.	1	1
- 11	96-534039-11	. COVER ASSY,SEAT BACK.	1	1
- 12	96-534013-17	. . PANEL,SEAT BACK INSERT.	2	1
- 13	96-534039-9	. COVER ASSY,SEAT BOTTOM.	1	1
- 14	96-534013-19	. . PANEL,SEAT BOTTOM INSERT.	2	1
- 15	96-534039-5	. . PAN ASSY.	1	1
- 16	96-534039-33	. . CUSHION ASSY,BOTTOM	1	1
- 17	96-534039-17	. HOLDER,LICENSE.	1	1
		/ATTACHING PARTS/		
	AN227-8B	. STUD.	6	
	NAS387-632	. SCREW	6	
	AN960-6	. WASHER.	6	
	AN363-632	. NUT	6	
- 18	96-534038-23	BRACKET	2	1
		/ATTACHING PARTS/		
- 19	AN6-10	BOLT.	1	
	AN960-616	WASHER.	1	
- 20	96-534038-25	BRACKET	1	1
		/ATTACHING PARTS/		
- 21	AN6-10	BOLT.	1	
	AN960-616	WASHER.	1	

CODES OF EFFECTIVITY

1 TC-238 THRU TC-640

"END"

25-21-20
SEATS,SPECIAL
TC-641 THRU TC-1298,TE-1 THRU TE-767

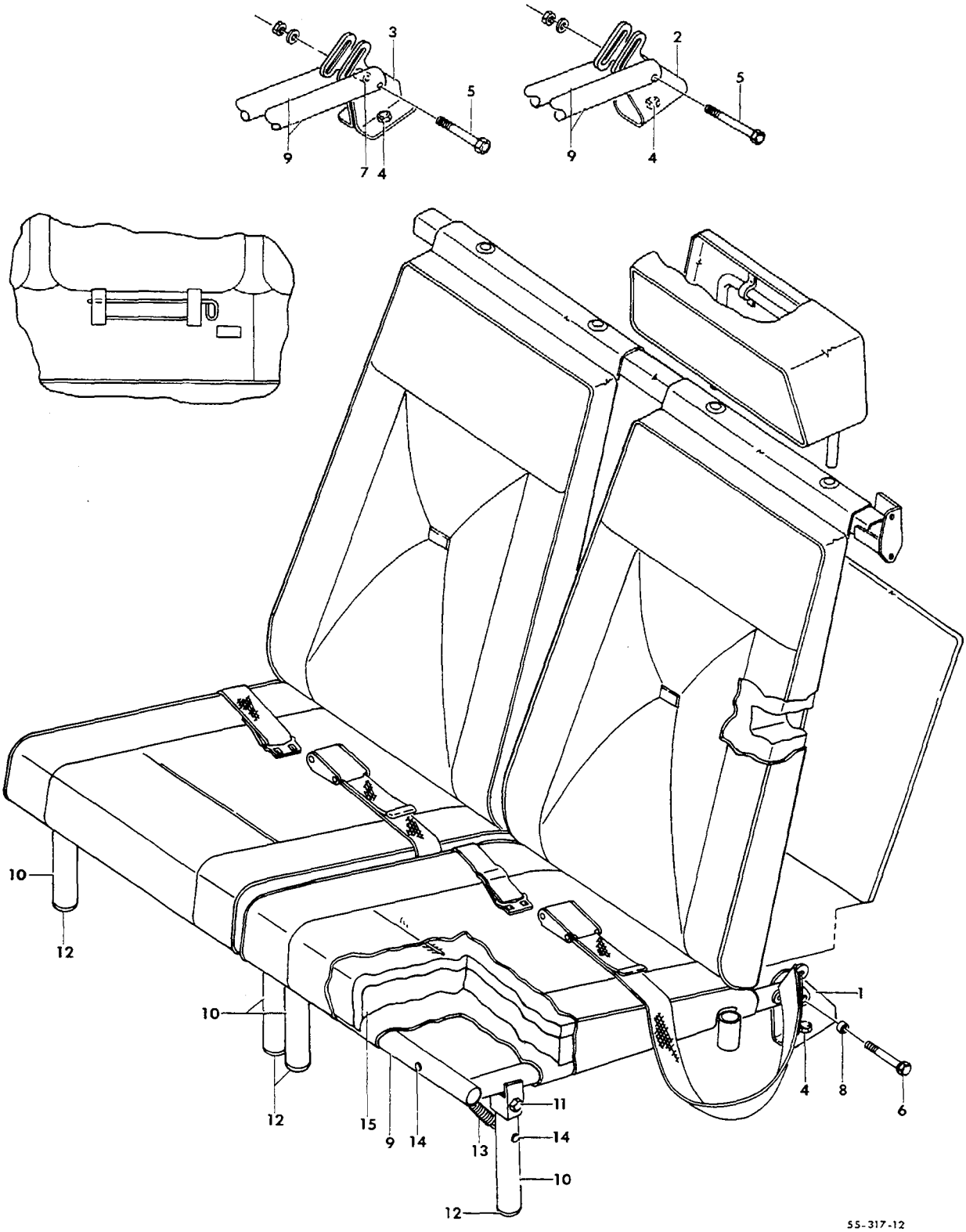

FIGURE 21-20.SEATS,SPECIAL
/SHEET 1 OF 2 SHEETS/

ATA CODE & INDEX NO.	PART NO.	DESCRIPTION 1 2 3 4 5 6 7	UNITS PER ASSY	USABLE ON CODE
21-20	96-534051-1	SEAT INSTL,FOLDING 5TH/WITH EXTENDED BAGGAGE. . /COMPARTMENT/	NP	1
	96-534051-3	SEAT INSTL,FOLDING 5TH AND 6TH/WITH EXTENDED. . /BAGGAGE COMPARTMENT/	NP	1
	96-534051-5	SEAT INSTL,FOLDING 5TH/WITHOUT EXTENDED . . . . /BAGGAGE COMPARTMENT/	NP	1
	96-534051-7	SEAT INSTL,FOLDING 5TH AND 6TH/WITHOUT. . . . . /EXTENDED BAGGAGE COMPARTMENT/	NP	1
	96-534051-73	SEAT INSTL,FOLDING 5TH/WITH EXTENDED BAGGAGE. . /COMPARTMENT/	NP	2
	96-534051-75	SEAT INSTL,FOLDING 5TH AND 6TH/WITH EXTENDED. . /BAGGAGE COMPARTMENT/	NP	2
- 1	96-534051-13	. BRACKET,SEAT SUPPORT.	2	3
	96-534051-79	. BRACKET,SEAT SUPPORT.	2	4
- 2	96-534051-15	. BRACKET,SEAT SUPPORT/USED WITH 5TH & 6TH. . . /SEAT INSTL ONLY/	1	3
- 3	96-534051-81	. BRACKET,LH SEAT SUPPORT/USED WITH 5TH & 6TH . /SEAT INSTL ONLY/	1	4
	96-534051-82	. BRACKET,RH SEAT SUPPORT/USED WITH 5TH & 6TH . /SEAT INSTL ONLY/ /ATTACHING PARTS/	1	4
- 4	AN6-7A/M/	. BOLT.	1	
	96-534051-603	. UPHOLSTERY ASSY,FOLDING 5TH SEAT.	1	1
	96-534051-604	. UPHOLSTERY ASSY,FOLDING 6TH SEAT.	1	1
	96-534051-608	. UPHOLSTERY ASSY,FOLDING 5TH SEAT.	1	2
	96-534051-609	. UPHOLSTERY ASSY,FOLDING 6TH SEAT. . . . . /ATTACHING PARTS/	1	2
- 5	AN4-27A/M/	. BOLT.	1	
- 6	AN4-20A/M/	. BOLT.	1	
- 7	102933D5ZM0375	. SPACER,INBD LEG ATTACHING	1	
- 8	102933D5ZM0190	. SPACER,OUTBD LEG ATTACHING.	1	
	MS20365-428	. NUT	1	
- 9	96-534051-25	. . WELD ASSY,5TH SEAT CHAIR BOTTOM	1	5
	96-534051-26	. . WELD ASSY,6TH SEAT CHAIR.	1	5
- 10	96-534051-27	. . TUBE,CHAIR LEG.	2	3
	96-534051-83	. . TUBE,CHAIR LEG. . . . . /ATTACHING PARTS/	2	4
- 11	AN3-14/M/	. . BOLT.	1	
	AN960-10L	. . WASHER.	1	
	MS20365-1032	. . NUT	1	
- 12	HS15248	. . PLUG BUTTON	1	5
- 13	100942L0200-48	. . SPRING. . . . . /ATTACHING PARTS/	2	5
- 14	MS20392-1C35	. . PIN	2	
- 15	96-534051-45	. . CUSHION,BOTTOM.	1	5

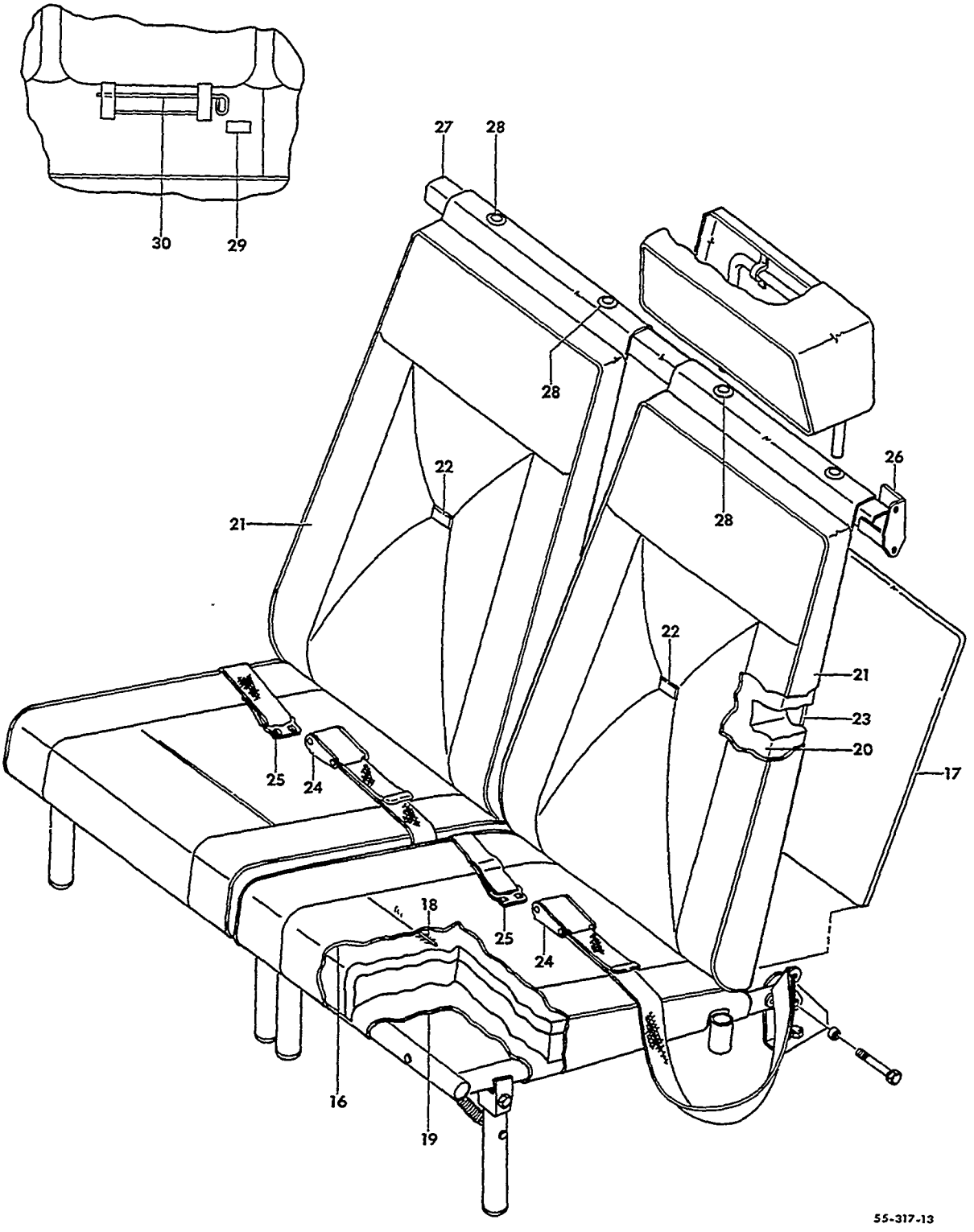

FIGURE 21-20.SEATS,SPECIAL
/SHEET 2 OF 2 SHEETS/

ATA CODE & INDEX NO.	PART NO.	DESCRIPTION 1 2 3 4 5 6 7	UNITS PER ASSY	USABLE ON CODE
21-20 - 16	96-534051-47	. . COVER ASSY,BOTTOM/FOLDING 5TH WITH. . . . . /EXTENDED BAGGAGE COMPARTMENT/	1	1
	96-534051-48	. . COVER ASSY,BOTTOM/FOLDING 6TH WITH. . . . . /EXTENDED BAGGAGE COMPARTMENT/	1	1
	96-534051-49	. . COVER ASSY,BOTTOM/FOLDING 5TH WITHOUT . . . /EXTENDED BAGGAGE COMPARTMENT/	1	1
	96-534051-50	. . COVER ASSY,BOTTOM/FOLDING 6TH WITHOUT . . . /EXTENDED BAGGAGE COMPARTMENT/	1	1
	96-534051-71	. . COVER ASSY,BOTTOM/FOLDING 5TH WITH. . . . . /EXTENDED BAGGAGE COMPARTMENT/	1	2
	96-534051-72	. . COVER ASSY,BOTTOM/FOLDING 6TH WITH. . . . . /EXTENDED BAGGAGE COMPARTMENT/	1	2
- 17	35-534432-5	. . . PAN/USED WITHOUT EXTENDED BAGGAGE . . . . /COMPARTMENT/	1	1
- 18	96-534013-25	. . . WIRE.	1	5
- 19	35-534425-29	. . . PANEL,SEAT BOTTOM INSERT.	1	2
- 20	96-534051-43	. . CUSHION,SEAT BACK	1	5
- 21	96-534051-41	. . COVER ASSY,SEAT BACK.	1	1
	96-534051-69	. . COVER ASSY,SEAT BACK.	1	2
- 22	35-534425-9	. . . BUTTON,SEAT BACK.	1	1
- 23	35-534425-27	. . . PANEL,SEAT BACK INSERT.	1	2
	96-534039-23	. . BELT ASSY,SEAT.	1	5
- 24	FDK2707	. . . BUCKLE ASSY	1	5
- 25	D611A	. . . TIP	1	5
- 26	96-534051-65	. WELD ASSY,LH BAR SUPPORT.	1	5
	96-534051-34	. WELD ASSY,RH BAR SUPPORT.	1	5
- 27	96-534051-59	. BAR ASSY. . . . . /ATTACHING PARTS/	1	5
	AN509-10R	. SCREW	4	
- 28	130010	. MOULDING.	2	5
- 29	96-534042-3	. PLACARD,EMERGENCY EXIT INSTRUCTIONS . . . . . /ATTACHING PARTS/	1	5
	NAS384-6	. SCREW	2	
- 30	96-534051-61	. PIN,EMERGENCY EXIT.	1	5

CODES OF EFFECTIVITY

1 TC-641 THRU TC-1298
2 TE-1 THRU TE-767
3 TC-641 THRU TC-954
4 TC-955 THRU TC-1298
TE-1 THRU TE-767
5 TC-641 THRU TC-1298
TE-1 THRU TE-767

"END"

25-21-30
SEATS,SPECIAL
TC-1299 THRU TC-1607
TE-768 THRU TE-942 EXCEPT TE-938

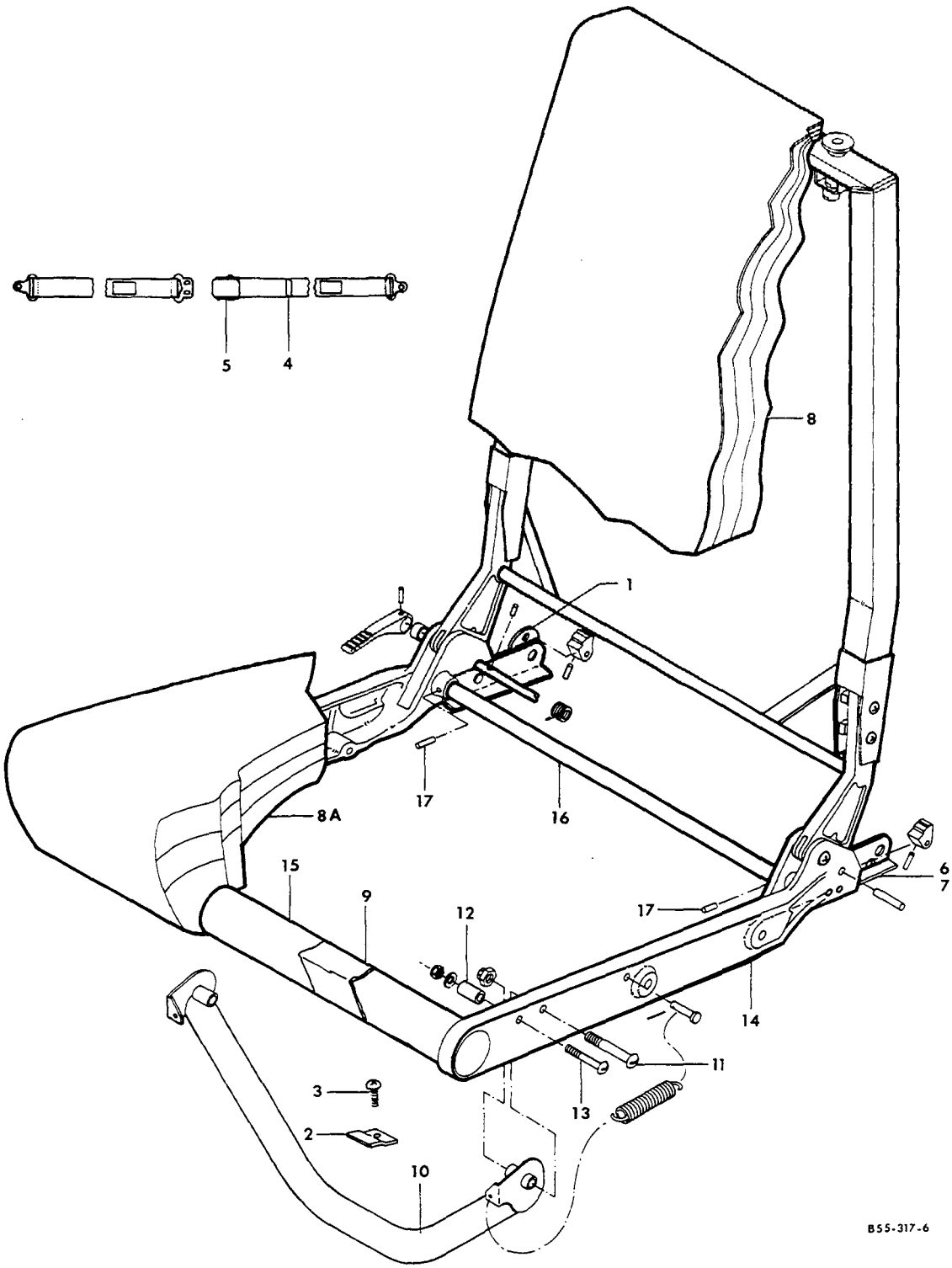

FIGURE 21-30.SEATS,SPECIAL
/SHEET 1 OF 2 SHEETS/

ATA CODE & INDEX NO.	PART NO.	DESCRIPTION 1 2 3 4 5 6 7	UNITS PER ASSY	USABLE ON CODE
21-30	36-530011-37	SEAT INSTL/5TH AND 6TH/	NP	1
	36-530011-41	SEAT INSTL,LH/5TH/	NP	1
	36-530011-42	SEAT INSTL,RH/6TH/	NP	1
- 1	36-530011-35	. BRACKET,INBD/CHAIR ATTACHING/	2	1
	36-530071-1	. BRACKET,OUTBD/CHAIR ATTACHING/	2	1
		/ATTACHING PARTS/		
	AN3-5A/M/	. BOLT	2	
- 2	36-530011-17	. STOP,CHAIR LEG	2	1
		/ATTACHING PARTS/		
- 3	NAS220-12	. SCREW	2	
	36-530021-1	. BELT ASSY,SEAT	1	1
- 4	D611A	. . TIP,SEAT BELT	1	1
- 5	CS4000W/265-4	. . BUCKLE ASSY,SEAT BELT	1	1
	58-530029-1	. CHAIR ASSY,UPHOLSTERED/5TH & 6TH SEAT/	2	2
	58-530107-1	. CHAIR ASSY,UPHOLSTERED/5TH & 6TH SEAT/	2	3
		/ATTACHING PARTS/		
- 6	NAS1334S6S10F	. PIN,QUICK RELEASE/5TH & 6TH SEAT/	2	
- 7	36-530058-1	. BUSHING	2	
	58-530029-601	. . UPHOLSTERY ASSY/5TH & 6TH SEAT/	1	4
	58-530029-603	. . UPHOLSTERY ASSY/5TH & 6TH SEAT/	1	5
	58-530107-601	. . UPHOLSTERY ASSY/5TH & 6TH SEAT/	1	6
- 8	58-530029-5	. . . PAD,SEAT BACK	1	2
	58-530080-3	. . . CUSHION,SEAT BACK	1	3
	58-530029-17	. . . COVER ASSY,SEAT BACK	1	2
	58-530107-5	. . . COVER ASSY,SEAT BACK	1	3
- 8A	58-530072-5	. . . CUSHION ASSY,SEAT BOTTOM	1	2
	58-530082-5	. . . CUSHION,SEAT BOTTOM	1	3
	58-530029-15	. . . COVER ASSY,SEAT BOTTOM	1	2
	58-530107-3	. . . COVER ASSY,SEAT BOTTOM	1	3
- 9	36-530023-17	. . EXTENSION,SEAT BOTTOM	1	2
	58-530123-1	. . EXTENSION,SEAT BOTTOM	1	3
		/ATTACHING PARTS/		
	AN530-6R5	. . SCREW	10	
	36-530020-31	. . FRAME ASSY,CHAIR	1	2
	36-530020-41	. . FRAME ASSY,CHAIR	1	3
- 10	36-530020-35	. . . LEG,CHAIR	1	1
		/ATTACHING PARTS/		
- 11	AN525-10R32	. . . SCREW	2	
	AN960-10L	. . . WASHER	2	
	MS20364-1032	. . . NUT	2	
- 12	102933D4ZR0850	. . . STOP,LEG	2	1
		/ATTACHING PARTS/		
- 13	NAS221-10R20	. . . SCREW	1	
	AN960-10L	. . . WASHER	1	
	MS20364-1032	. . . NUT	1	
- 14	60-530039-1	. . . RAIL,LH/DRILL ON INSTL/	1	1
	60-530039-2	. . . RAIL,RH/DRILL ON INSTL/	1	1
- 15	60-530019-67	. . . TUBE,FWD	1	1
- 16	36-530020-13	. . . TUBE,AFT	1	1
		/ATTACHING PARTS/		
- 17	MS171565	. . . PIN	2	

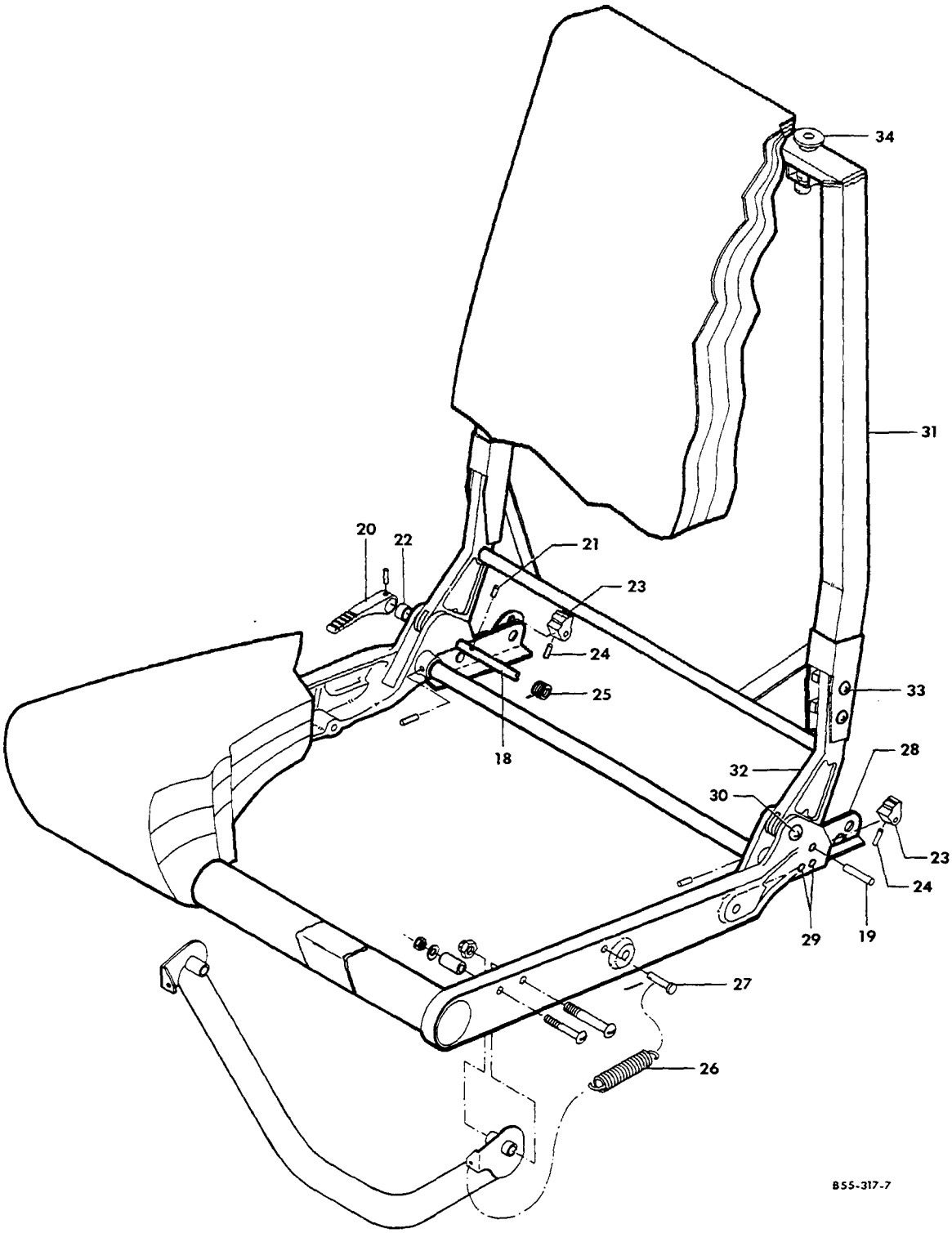

FIGURE 21-30.SEATS,SPECIAL
/SHEET 2 OF 2 SHEETS/

ATA CODE & INDEX NO.	PART NO.	DESCRIPTION 1 2 3 4 5 6 7	UNITS PER ASSY	USABLE ON CODE
21-30 - 18	60-530019-55	. . . TUBE,CONTROL.	1	1
- 19	60-530045	. . . PIN	1	1
- 20	58-530045-2	. . . HANDLE ASSY	1	1
		/ATTACHING PARTS/		
- 21	MS171498	. . . PIN	2	
		——+——		
	58-530045-3	. . . . HANDLE.	1	1
	58-530046	. . . . PIN,HANDLE.	1	1
- 22	36-530020-39	. . . WASHER.	1	1
- 23	60-530043-5	. . . CAM,CHAIR/RECLINE/.	2	1
		/ATTACHING PARTS/		
- 24	MS171539	. . . PIN	2	
		——+——		
	MS171532	. . . PIN,CAM STOP.	2	1
- 25	60-530046-1	. . . SPRING,RH	1	1
	60-530046-2	. . . SPRING,LH	1	1
- 26	100942L0216-60	. . . SPRING,LEG.	1	1
- 27	AN393-13	. . . PIN	1	1
- 28	36-530020-29	. . . ANGLE,CHAIR MOUNTING LH	1	1
	36-530020-30	. . . ANGLE,CHAIR MOUNTING RH	1	1
		/ATTACHING PARTS/		
- 29	AN3-4A/M/	. . . BOLT.	2	
	NAS20364-1032	. . . NUT	2	
		——+——		
	58-530026-3	. . . BACK ASSY,CHAIR	1	2
	58-530026-31	. . . BACK ASSY,CHAIR	1	3
		/ATTACHING PARTS/		
- 30	NAS221-18	. . . SCREW	2	
	22K2-02	. . . NUT,CAP	2	
		——+——		
- 31	58-530026-7	. . . . WELD ASSY,CHAIR BACK.	1	2
	58-530026-33	. . . . WELD ASSY,CHAIR BACK.	1	3
- 32	60-530040-1	. . . . ADAPTER,CHAIR BACK.	2	1
		/ATTACHING PARTS/		
- 33	AN23-13A/M/	. . . . BOLT.	1	
	AN960-10L	. . . . WASHER.	1	
	22K2-02	. . . . NUT,CAP	1	
		——+——		
- 34	130010	. . MOULDING,HEADREST SUPPORT	2	1
	6411B	. . LOOP,FOOTMAN.	2	1
		/ATTACHING PARTS/		
	NAS387-1032-8	. . SCREW/IN CHAIR BACK/.	2	
	NAS384-1032-8	. . SCREW/IN CHAIR BOTTOM/.	2	
		——+——		
	36-530056-15	. . PLATE,FOOTMAN LOOP.	2	1
	130569	. . PLACARD,SEAT IDENTIFICATION	2	1
		/ATTACHING PARTS/		
	AN535-2-4	. . SCREW	2	
		——+——		
	36-530049-5	. STRAP ASSY,CHAIR RETAINING.	2	1
	58-530041-19	COVER,BOTTOM/GREEN TENT CLOTH/.	2	1
	58-530041-21	COVER,BACK/GREEN TENT CLOTH/.	2	1

CODES OF EFFECTIVITY

1 TC-1299 THRU TC-1607 TE-768 THRU TE-942 EXCEPT TE-938
2 TC-1299 THRU TC-1402 TE-768 THRU TE-846
3 TC-1403 THRU TC-1607 TE-847 THRU TE-942 EXCEPT TE-938
4 TC-1299 THRU TC-1333 TE-768 THRU TE-803
5 TC-1334 THRU TC-1402 TE-804 THRU TE-942 EXCEPT TE-938
6 TC-1403 THRU TC-1607

"END"

25-22-01
CABIN UPHOLSTERY
TE-1 THRU TE-451

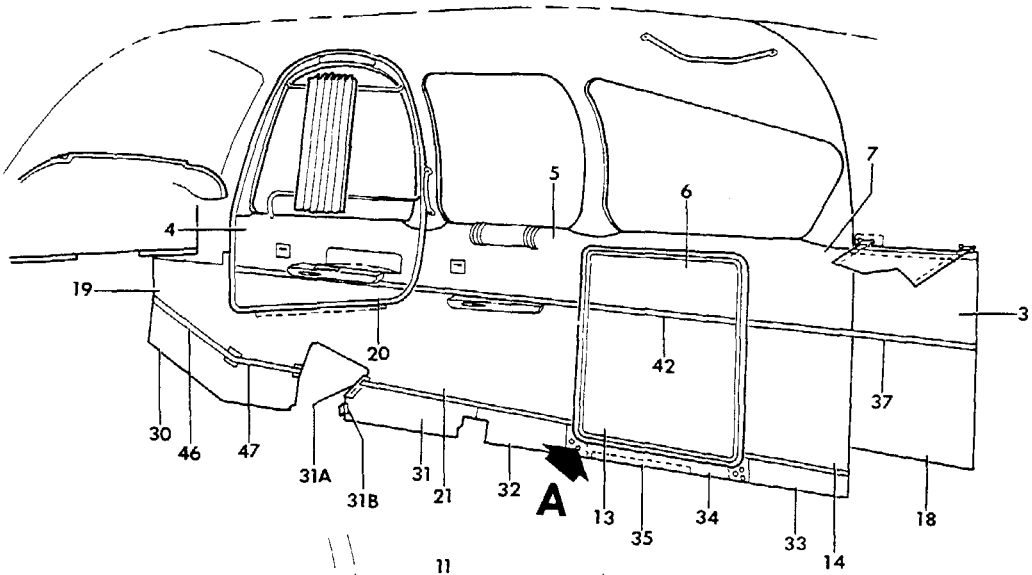

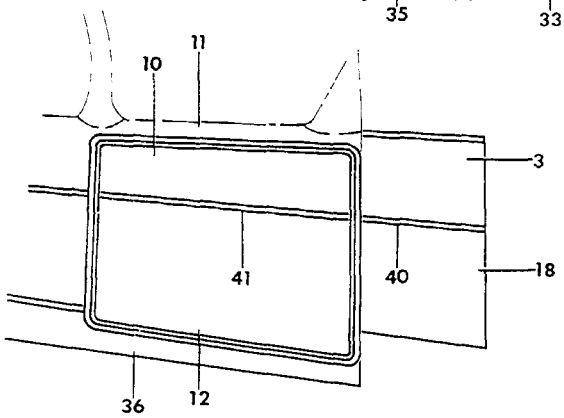

VIEW A

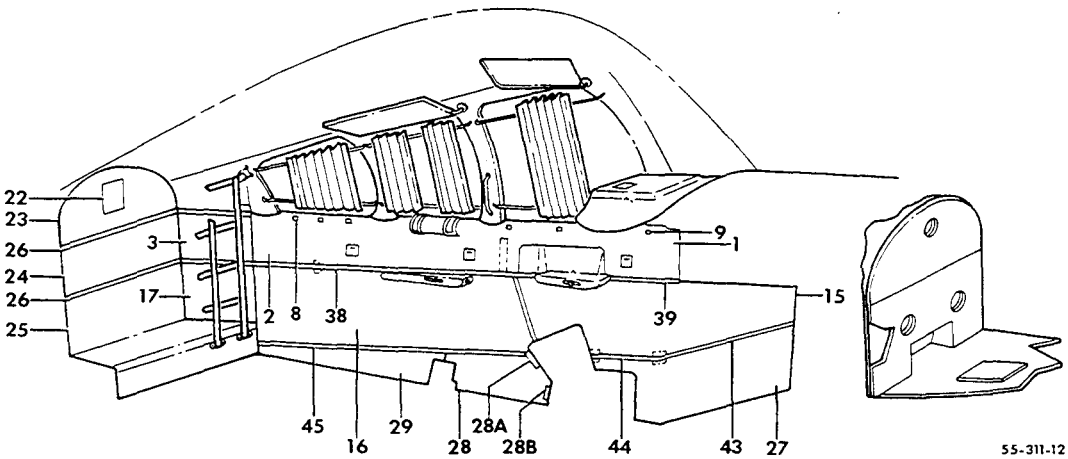

FIGURE 22-01.CABIN UPHOLSTERY
/SHEET 1 OF 4 SHEETS/

ATA CODE & INDEX NO.	PART NO.	DESCRIPTION 1 2 3 4 5 6 7	UNITS PER ASSY	USABLE ON CODE
22-01	96-530004-1	UPHOLSTERY INSTL/STD BAGGAGE DOOR/.	NP	1
	96-530004-3	UPHOLSTERY INSTL/UTILITY BAGGAGE DOOR/.	NP	1
- 1	96-530004-5C	. PANEL ASSY,UPPER FWD LH	1	1
- 2	96-530004-7	. PANEL ASSY,UPPER CENTER,LH.	1	1
- 3	96-530004-9	. PANEL ASSY,UPPER AFT.	2	1
- 4	96-530004-33	. PANEL ASSY,UPPER CABIN DOOR	1	1
- 5	96-530004-35	. PANEL ASSY,UPPER CENTER RH.	1	1
- 6	96-530004-37	. PANEL ASSY,UPPER BAGGAGE DOOR/STANDARD/ . . .	1	1
- 7	96-530004-39	. PANEL ASSY,UPPER BAGGAGE COMPARTMENT RH . . . /USED WITH STD BAGGAGE DOOR ONLY/	1	1
- 8	96-530002-67	. CLIP,PANEL ATTACH	6	1
- 9	96-530002-69	. CLIP,PANEL ATTACH	13	1
- 10	96-530004-67	. PANEL ASSY,UPPER UTILITY BAGGAGE DOOR	1	1
- 11	96-530004-69	. PANEL ASSY,UPPER BAGGAGE COMPARTMENT RH . . . /USE ONLY WITH UTILITY BAGGAGE DOOR/	1	1
- 12	96-530004-71	. PANEL ASSY,LOWER UTILITY BAGGAGE DOOR	1	1
- 13	96-530004-63	. PANEL ASSY,LOWER STD BAGGAGE DOOR	1	1
- 14	96-530004-65	. PANEL ASSY,LOWER BAGGAGE COMPARTMENT RH . . . /USE ONLY WITH STD BAGGAGE DOOR/	1	1
- 15	96-530004-49 C	. PANEL ASSY,UPPER FWD LH	1	1
- 16	96-530004-57	. PANEL ASSY,CENTER LH.	1	1
- 17	96-530004-53	. PANEL ASSY,LOWER BAGGAGE COMPARTMENT LH . . .	1	1
- 18	96-530004-54	. PANEL ASSY,LOWER BAGGAGE COMPARTMENT RH . . .	1	1
- 19	96-530004-57	. PANEL ASSY,CENTER FWD RH.	1	1
- 20	96-530004-59C	. PANEL ASSY,LOWER CABIN DOOR	1	1
- 21	96-530004-61	. PANEL ASSY,CENTER RH.	1	1
- 22	118650	. HOLDER,LICENSE.	1	1
- 23	96-530004-81	. PANEL ASSY,UPPER AFT BAGGAGE COMPARTMENT. . .	1	1
- 24	96-530004-41	. PANEL ASSY,MIDDLE AFT BAGGAGE COMPARTMENT . .	1	1
- 25	96-530004-77	. PANEL ASSY,LOWER AFT BAGGAGE COMPARTMENT. . .	1	1
- 26	96-534049-39	. TRIM,AFT BAGGAGE COMPARTMENT.	2	1
- 27	96-530004-107	. PANEL ASSY,LOWER FWD LH	1	1
- 28	96-530004-111	. PANEL ASSY,LOWER CENTER LH.	1	1
	96-530004-601	. . PANEL ASSY UPHOLSTERY	1	1
- 28A	35-534201-2	. . . ANGLE,FRONT SPAR LH UPPER	1	1
- 28B	35-534202-2	. . . ANGLE,FRONT SPAR RH LOWER	1	1
- 29	96-530004-115	. PANEL ASSY,LOWER AFT LH	1	1
- 30	96-530004-119	. PANEL ASSY,LOWER FWD RH	1	1
- 31	96-530004-123	. PANEL ASSY,LOWER CENTER RH.	1	1
	96-530004-602	. . PANEL ASSY,UPHOLSTERY	1	1
- 31A	35-534201-3	. . . ANGLE,FRONT SPAR RH UPPER	1	1
- 31B	35-534202-3	. . . ANGLE,FRONT SPAR RH LOWER	1	1
- 32	96-530004-127	. PANEL ASSY,LOWER CENTER RH.	1	1
- 33	96-530004-131	. PANEL ASSY,LOWER AFT RH . . . . . /USE WITH STD BAGGAGE DOOR ONLY/	1	1
- 34	96-530001-209C	. PANEL,LOWER AFT RH. . . . . /USE WITH STD BAGGAGE DOOR ONLY/	1	1
- 35	96-530002-105	. COVER,LOWER AFT RH. . . . . /USE WITH STD BAGGAGE DOOR ONLY/	1	1
- 36	96-420016-89C	. PANEL ASSY,LOWER AFT RH . . . . . /USE WITG UTILITY BAGGAGE DOOR/	1	1
- 37	96-530004-45	. TRIM,AFT RH UPPER . . . . . /USE WITH STD BAGGAGE DOOR ONLY/	1	1
- 38	96-530004-47	. TRIM,AFT LH UPPER	1	1
- 39	96-530004-143	. TRIM,FWD LH UPPER	1	1
- 40	96-530004-159	. TRIM, BAGGAGE COMPARTMENT RH. . . . . /USE WITG UTILITY BAGGAGE DOOR ONLY/	1	1
- 41	96-530004-157	. TRIM, UTILITY BAGGAGE DOOR.	1	1
- 42	96-530004-153	. TRIM,STD BAGGAGE DOOR	1	1
- 43	96-530004-137	. TRIM,LOWER FWD LH	1	1
- 44	96-530004-139	. TRIM,LOWER FWD LH	1	1
- 45	96-530004-141	. TRIM,LOWER AFT LH	1	1
- 46	96-530004-145	. TRIM,LOWER FWD RH	1	1
- 47	96-530004-147	. TRIM,LOWER FWD RH	1	1

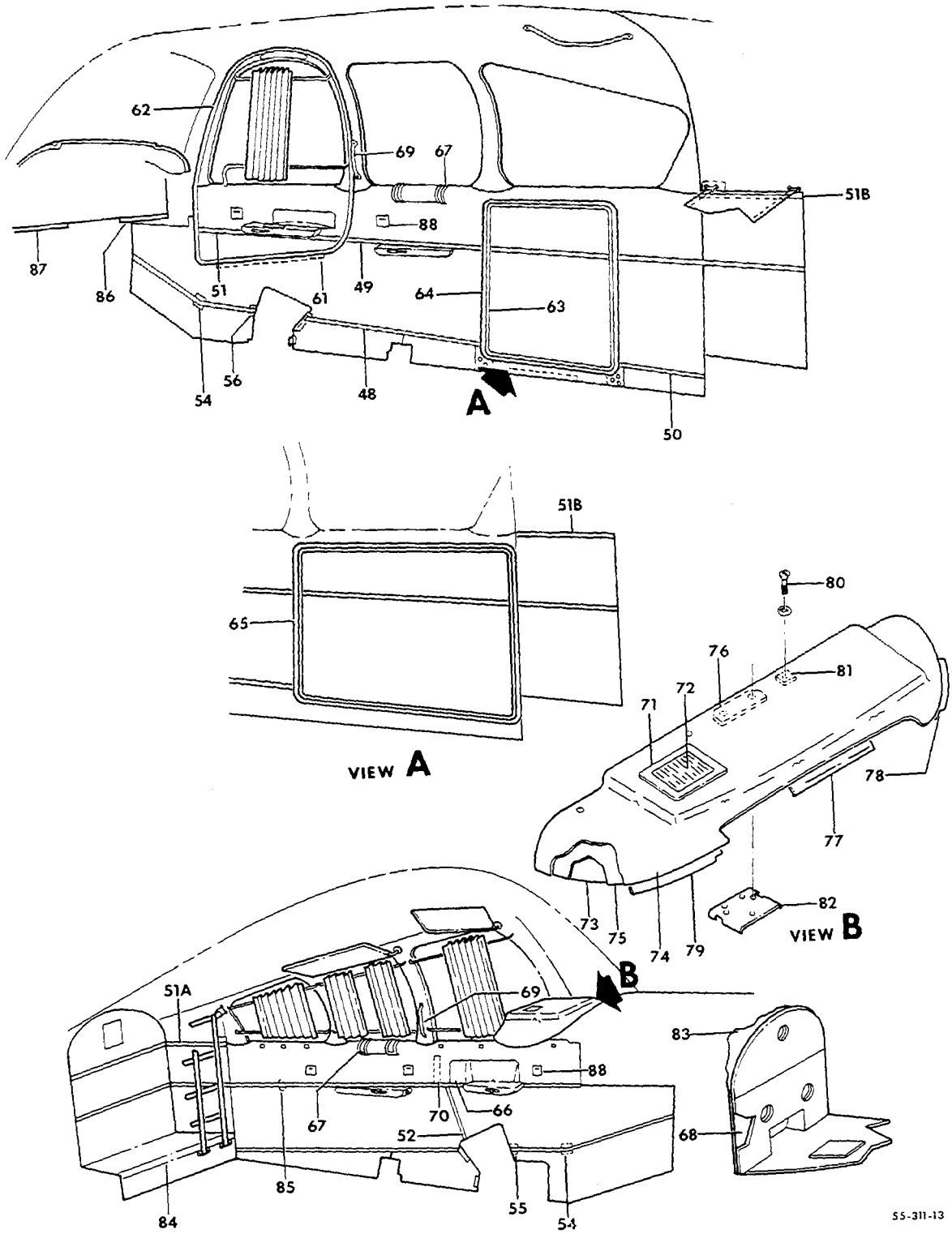

FIGURE 22-01.CABIN UPHOLSTERY
/SHEET 2 OF 4 SHEETS/

SUB-SECT UNIT & ITEM NO.	PART NO.	DESCRIPTION 1 2 3 4 5 6 7	UNITS PER ASSY	USABLE ON CODE
22-01 - 48	96-530004-149	. TRIM,LOWER CENTER RH.	1	1
- 49	96-530004-151	. TRIM,UPPER CENTER RH/STD DOOR ONLY/	1	1
- 50	96-530004-155	. TRIM,LOWER AFT BAGGAGE COMPARTMENT/STD DOOR/.	1	1
- 51	96-530001-77	. TRIM,CABIN DOOR	1	1
- 51A	96-534061-21	. TRIM,UPPER BAGGAGE COMPARTMENT LH	1	1
- 51B	96-534061-22	. TRIM,UPPER BAGGAGE COMPARTMENT RH	1	1
- 52	35-534420-49	. TRIM,CENTER LH.	1	1
- 53		. DELETED		
- 54	96-530001-221	. STRAP,TRIM CONNECT.	2	1
- 55	96-530001-219	. CLIP,LH	1	1
- 56	96-530001-220	. CLIP,RH	1	1
- 57		. DELETED		
- 58		. DELETED		
- 59		. DELETED		
- 60		. DELETED		
- 61	35-534306-31	. ANGLE	1	1
- 62	35-534420-81C	. WINDLACE,CABIN DOOR	1	1
- 63	35-534420-83C	. WINDLACE,STD BAGGAGE DOOR	1	1
- 64	35-534420-85C	. WINDLACE,STD BAGGAGE DOOR FRAME	1	1
- 65	96-420016-115	. WINDLACE,UTILITY BAGGAGE DOOR FRAME	1	1
- 66	96-534052	. PANEL FWD LH.	1	1
- 67	35-534412	. ESCUTCHEON,WINDOW LATCH	4	1
- 68	96-530004-115	. CARPET ASSY,AFT FIREWALL LH	1	1
	96-530004-197	. CARPET ASSY,AFT FIREWALL RH	1	1
- 69	34C3759	. HANDLE,ASSIST	2	1
		/ATTACHING PARTS/		
	NAS387-1032	. SCREW	2	
	NAS697A3	. ANCHOR NUT/SUPERSEDES MK1000-3/	2	
		----*----		
- 70	33-530003-89	. BRACKET	1	1
	96-530013-53	. GLARE SHIELD INSTL.	NP	1
	R 96-530013-55	. . GLARE SHIELD ASSY	1	2
	R 96-530013-609	. . GLARE SHIELD ASSY	1	3
	R 2390A17	. . LIGHT,ALTERNATOR OUT.	1	1
- 71	96-530013-11	. . RETAINER.	1	1
- 72	96-530013-13	. . GRILL	1	1
- 73	96-530013-73	. . DECK.	1	1
- 74	96-530013-17	. . COVER,SPAR.	1	1
- 75	96-530013-21	. . FILLER.	1	1
- 76	96-530013-59	. . BLOCK	1	1
- 77	95-530014-5	. . ANGLE	1	1
- 78	95-554017-9	. . ANGLE,LH.	1	1
- 79	95-554017-10	. . ANGLE,RH.	1	1
		/ATTACHING PARTS/		
	AN507-632R	. . SCREW	4	1
		----*----		
	102933P2ZM0156	. . SPACER.	4	1
	AN960-6	. . WASHER.	4	1
- 80	AN5078632-14	. . SCREW	5	1
	96-530013-35	. . WASHER.	5	1
- 81	96-530013-37	. . BLOCK	2	1
- 82	96-530013-45	. . BRACKET	1	1
- 83	95-530000-33	. . WRAPPER,COWL.	1	1
	108424-2	. . CLIP.	1	1
	185678	. . SPRING CLIP	1	1
- 84	96-440001-21	. ANGLE,BAGGAGE COMPARTMENT	1	1
- 85	50-534475-101	. PLATE,TRIM STRIP MOUNTING	AR	1
- 86	96-530002-75	. PANEL ASSY,BELOW INSTRUMENT PANEL RH.	1	1
- 87	96-530002-79	. PANEL ASSY,BELOW INSTRUMENT PANEL LH.	1	1
	7155	. TABLE ASSY,CARD	1	1
- 88	2A20580	. ASH TRAY.	5	1
		/ATTACHING PARTS/		
	NAS384-6P	. SCREW	2	
	AN970-3	. WASHER.	2	
	A6310-6Z1	. NUT	2	
		----*----		

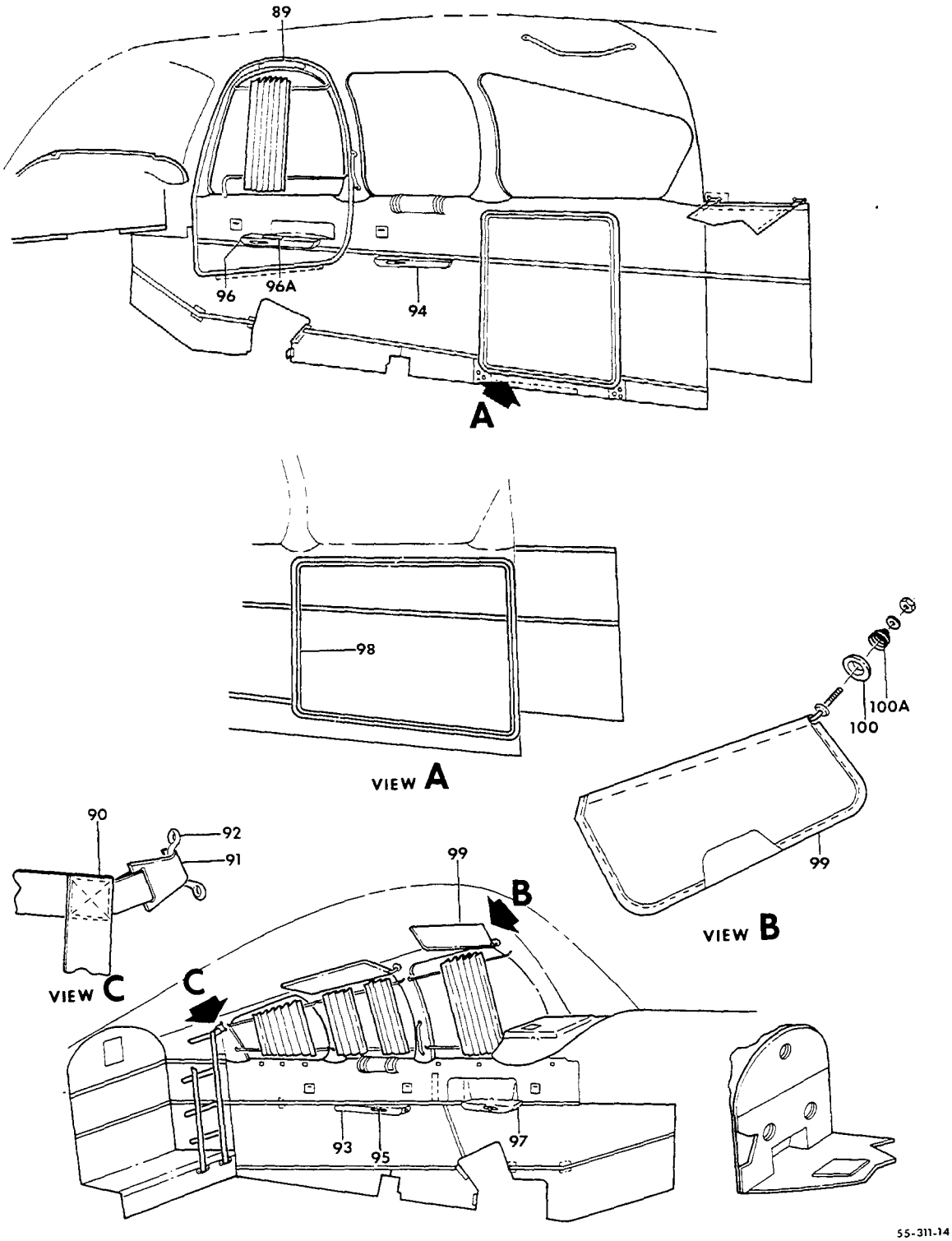

FIGURE 22-01.CABIN UPHOLSTERY
/SHEET 3 OF 4 SHEETS/

ATA CODE & INDEX NO.	PART NO.	DESCRIPTION 1 2 3 4 5 6 7	UNITS PER ASSY	USABLE ON CODE
22-01 - 89	35-534304-93	. PANEL ASSY,UPPER CABIN DOOR	1	1
- 90	96-534049-23	. WEB ASSY,BAGGAGE COMPARTMENT.	1	1
- 91	414-180644-9	. . HOOK.	3	1
- 92	6411B	. . LOOP,FOOTMAN.	8	1
		/ATTACHING PARTS/		
	NAS387-832	. . SCREW	2	
	MS20365-832	. . NUT	2	
		——*——		
	35-534413-47	. ARM REST INSTL.	NP	1
- 93	96-534024-33C	. . ARM REST ASSY,LH REAR	1	1
- 94	96-534024-34C	. . ARM REST ASSY,RH REAR	1	1
		/ATTACHING PARTS/		
	NAS384-6P	. . SCREW	2	
	NAS390-6P	. . WASHER.	2	
	1784-6Z1	. . NUT,AFT END	1	
	A1785-6Z1	. . NUT,FWD END	1	
		——*——		
	96-534024-605	. . . BRACKET ASSY,ARM REST LH REAR	1	1
	96-534024-606	. . . BRACKET ASSY,ARM REST RH REAR	1	1
	96-534024-23	. . . . CHANNEL,LH REAR	1	1
	96-534024-24	. . . . CHANNEL,RH REAR	1	1
	96-534024-27	. . . . COVER,LH REAR	1	1
	96-534024-28	. . . . COVER,RH REAR	1	1
	96-534024-25	. . . PAN,LH REAR	1	1
	96-534024-26	. . . PAN,RH REAR	1	1
- 95	35-534382	. . . INSIGNIA.	1	1
- 96	96-534024-45C	. . ARM REST ASSY,CABIN DOOR.	1	1
		/ATTACHING PARTS/		
	NAS384-6P	. . SCREW	2	
	NAS390-6P	. . WASHER.	2	
	A1784-6Z1	. . NUT,AFT END	1	
	A1785-6Z1	. . NUT,FWD END	1	
		——*——		
	96-534024-609	. . . BRACKET ASSY,CABIN DOOR ARM REST.	1	1
	96-534024-28	. . . . COVER	1	1
	96-534024-35	. . . . CHANNEL	1	1
	96-534024-39	. . . . ANGLE	1	1
	NAS451-7	. . . . PLUG BUTTON	2	1
	96-534024-37	. . . PAN	1	1
- 96A	35-534244-1	. . . PULL,DOOR	1	1
	AN53-6R6	. . . SCREW	2	1
	35-534382	. . . INSIGNIA.	1	1
- 97	96-534024-65	. . ARM REST ASSY,PILOT	1	1
		/ATTACHING PARTS/		
	NAS384-6P6	. . SCREW	2	
	NAS390-6P	. . WASHER.	2	
	A1784-6Z1	. . NUT	1	
	A1785-6Z1	. . NUT	1	
		——*——		
	96-534024-614	. . . BRACKET ASSY,PILOT ARM REST	1	1
	96-534024-57	. . . . CHANNEL	1	1
	96-534024-59	. . . . COVER	1	1
	96-534024-61	. . . PAN	1	1
	35-534382	. . . INSIGNIA.	1	1
	NAS451-7	. . . PLUG BUTTON	2	1
- 98	96-420016-113	. SEAL,UTILITY BAGGAGE DOOR	1	1
	35-534079-604	. SUN VISOR ASSY,FRONT.	2	1
- 99	35-534079-2	. . SHADE	1	1
	35-534079-4	. . PIVOT	2	1
	35-534079-22	. . CLUTCH.	1	1
	33-530003-135	. . WELD ASSY	1	1
-100	33-530003-107	. PIVOT	2	1
-100A	95-534037	. SPRING.	2	1
	AN960-10	. WASHER.	4	1

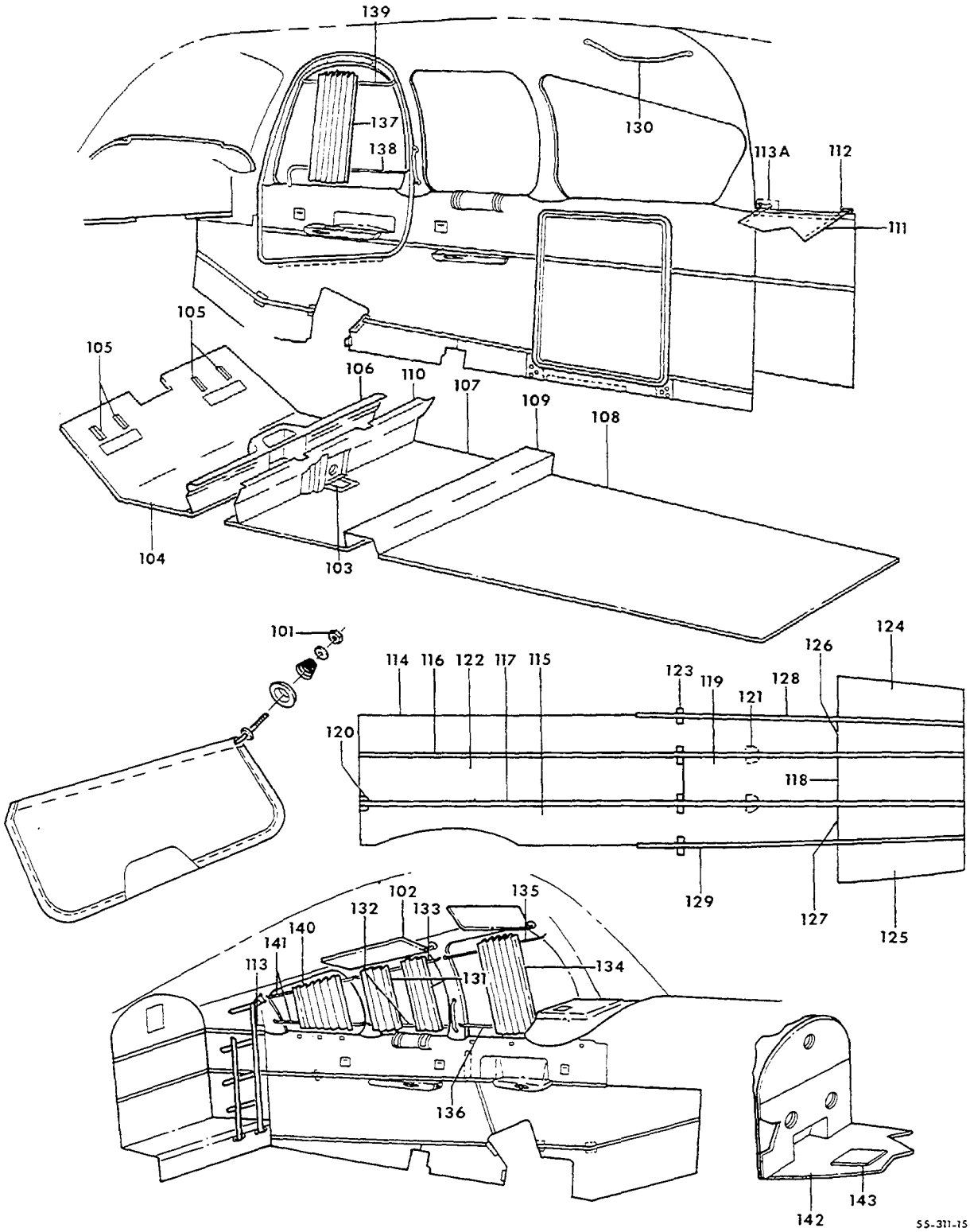

FIGURE 22-01.CABIN UPHOLSTERY
/SHEET 4 OF 4 SHEETS/

SUB-SECT UNIT & ITEM NO.	PART NO.	DESCRIPTION 1 2 3 4 5 6 7	UNITS PER ASSY	USABLE ON CODE
22-01 -101	MS20365-1032	NUT/SUPERSEDES AN365-1032/	2	1
	5598577	CLIP,SUN VISOR	4	1
-102	35-534090-26	SUN VISOR ASSY,REAR	2	1
-103	35-415380-22	PAN,MID CARPET ASSY	1	1
-104	96-530002-55C	CARPET ASSY,FWD	1	1
-105	35-534305-55	BOOT ASSY	8	1
-106	96-920013-5	COVER ASSY,FUEL SELECTOR VALVE	1	1
-107	35-534305-39C	CARPET ASSY,CENTER	1	1
-108	95-530002-53C	CARPET ASSY,AFT	1	1
-109	95-530002-73C	COVER ASSY,AFT SPAR	1	1
	96-530002-83C	PARTITION ASSY,FRONT SPAR	1	1
-110	35-534191-15C	COVER ASSY,FRONT SEAT/REAR/	1	1
-111	96-534061-3	NET ASSY,HAT STOWAGE SHELF	1	1
-112	6411B	LOOP,FOOTMAN	4	1
	NAS384-10P	SCREW	2	1
-113	96-534061-7	DOUBLER,LH	2	1
-113A	96-534061-8	DOUBLER,RH	2	1
	96-530015-1	HEAD LINER INSTL/USED WITHOUT 5TH & 6TH SEAT/	NP	1
	96-530015-3	HEAD LINER INSTL/USED WITH 5TH & 6TH SEAT/	NP	1
-114	96-530015-5	PANEL ASSY,HEADLINER LH FWD	1	1
-115	96-530015-9	PANEL ASSY,HEADLINER RH FWD	1	1
-116	96-530015-11	TRACK,LH CENTER	1	1
-117	96-530015-12	TRACK,RH CENTER	1	1
-118 R	96-530015-13	PANEL ASSY,HEADLINER CENTER AFT	1	1
-119 R	96-530015-17	PANEL ASSY,HEADLINER CENTER/USED WITHOUT 5TH & 6TH SEAT FRESH AIR INSTL/	1	1
	96-530015-21	PANEL ASSY,HEADLINER CENTER/USED WITH 5TH & 6TH SEAT FRESH AIR INSTL/	1	1
-120	96-530015-25	PLATE,TRACK SUPPORT FWD	2	1
-121	50-534475-101	PLATE,TRACK SUPPORT	18	1
	6S	WELLNUT	26	1
	AN507-6R	SCREW	26	1
-122	96-530015-27	PANEL ASSY,HEADLINER FWD CENTER	1	1
-123	96-530015-43	ANGLE,TRACK SUPPORT	4	1
-124	96-530015-35	PANEL ASSY,AFT LOWER LH	1	1
-125	96-530015-36	PANEL ASSY,AFT LOWER RH	1	1
-126	96-530015-41	PANEL ASSY	1	1
-127	96-530015-42C	PANEL ASSY,AFT RH	1	1
-128	96-534049-41	TRACK,LH	1	1
-129	96-534049-43	TRACK,RH	1	1
-130	1440-14	STRAP,COAT HANGER /ATTACHING PARTS/	1	1
	NAS387R8	SCREW	2	
	NAS391B8P	WASHER/SUPERSEDES NAS391-8P/	2	
		——*——		
	35-534399-3	SPACER	2	1
-131	35-534220-27C	CURTAIN ASSY,CENTER WINDOW	4	1
-132	35-534220-23	TUBE,LOWER CENTER/SUPERSEDES 35-534220-21/	2	1
-133	35-534220-19	TUBE,UPPER CENTER/SUPERSEDES 35-534220-17/	2	1
-134	35-534221-15C	CURTAIN ASSY,LH FWD	1	1
-135	35-534227	TUBE UPPER	1	1
-136	35-534226	TUBE,LOWER	1	1
-137	35-534222-19C	CURTAIN ASSY,CABIN DOOR	1	1
-138	35-534222-17	TUBE,LOWER/SUPERSEDES 35-534222-15/	1	1
-139	35-534229	TUBE,UPPER	1	1
-140	35-534409-1C	CURTAIN ASSY,REAR WINDOW	4	1
-141	35-534405-1	TUBE ASSY,REAR WINDOW	4	1
-142	95-410031-29	CARPET ASSY,NOSE BAGGAGE	1	1
-143	95-410006-73	CARPET ASSY,ACCESS LID	1	1

CODES OF EFFECTIVITY

1 TE-1 THRU TE-451 2 TE-1 THRU TE-361
3 TE-362 THRU TE-451

25-22-02
CABIN UPHOLSTERY
TC-1 THRU TC-190

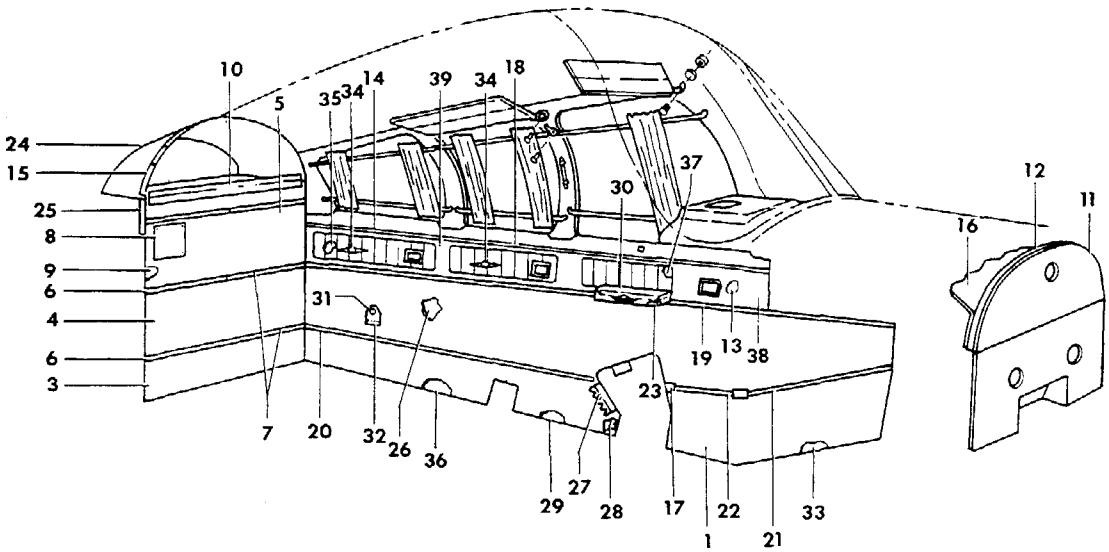

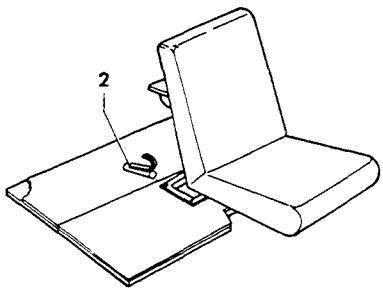

55-311-20

FIGURE 22-02.CABIN UPHOLSTERY
/SHEET 1 OF 2 SHEETS/

ATA CODE & INDEX NO.	PART NO.	DESCRIPTION 1 2 3 4 5 6 7	UNITS PER ASSY	USABLE ON CODE
22-02	96-530001-1	UPHOLSTERY INSTALLATION	NP	1
- 1	96-530001-31	. PANEL,UPHOLSTERY.	1	1
- 2	35-534052	. BOOT ASSY,LG HAND CRANK	1	1
	96-530001-612	. UPHOLSTERY ASSY/STA 170/.	1	1
- 3	96-530001-115	. . PANEL,UPHOLSTERY.	1	1
- 4	96-530001-111	. . PANEL,UPHOLSTERY.	1	1
- 5	96-530001-107	. . PANEL,UPHOLSTERY.	1	1
- 6	96-530001-127	. . PANEL,TRIM.	2	1
- 7	96-530001-129	. . PANEL,TRIM.	2	1
- 8	118650	. . HOLDER,FAA CERTIFICATE.	1	1
- 9	95-440006-19	. . PANEL	1	1
- 10	95-534011-7	. ANGLE,HAT SHELF	1	1
		/ATTACHING PARTS/		
	NAS384-6-8	. SCREW	4	
		----*----		
- 11	95-530000-21	. PANEL ASSY,FIREWALL	1	1
- 12	95-530000-23	. BLANKET ASSY,FIREWALL	1	1
	96-530001-617	. PANEL ASSY.	1	1
- 13	96-530001-137	. . PANEL	1	2
	96-530001-157	. PANEL	1	3
- 14	96-530001-229	. TRIM,UPPER AFT LH	1	4
- 15	96-530001-233	. SEAL,HAT SHELF TOP AIR.	1	1
- 16	95-530000-33	. WRAPPER,COWL.	1	1
- 17	96-530001-219	. CLIP.	1	1
- 18	96-530001-23	. TRIM,UPPER LH	1	1
- 19	96-530001-25	. TRIM,CENTER LH.	1	1
- 20	96-530001-27	. TRIM,LOWER AFT LH	1	1
- 21	96-530001-11	. TRIM,LOWER FWD LH	1	1
- 22	96-530001-13	. TRIM,LOWER CENTER LH.	1	1
- 23	96-530001-153	. BRACKET ASSY,	1	1
	96-530001-695	. ARMREST ASSY,PILOTS SIDEWALL.	1	1
	96-530001-696	. ARMREST ASSY,COPILOTS SIDEWALL.	1	1
- 24	96-534011-5	. SHELF,HAT	1	1
- 25	96-530001-235	. SEAL,HAT SHELF SIDE AIR	2	1
- 26	96-530001-19	. PANEL	1	1
- 27	35-534201-2	. ANGLE,SEAT PARTITION.	1	1
- 28	35-534202-2	. ANGLE,SEAT PARTITION.	1	1
- 29	96-530001-159	. PANEL	1	1
- 30	96-530001-15	. PANEL,ARMREST	1	1
	96-530001-16	. PANEL,ARMREST	1	1
	35-534192-14	. DOOR ASSY,STATIC AIR LINE DRAIN	1	5
	95-530002-111	. DOOR ASSY,STATIC AIR LINE DRAIN	1	6
- 31	35-534192-10	. . DOOR.	1	5
	35-410094-10	. . DOOR.	1	6
- 32	35-534192-12	. . HINGE	1	1
	99836	. . PIN	1	1
	98292-1-090	. . STUD.	1	1
	35-410175	. . PLACARD,STATIC AIR LINE DRAIN	1	5
- 33	96-530001-7	. PANEL	1	1
	96-530001-625	. CUSHION,ARMREST	2	1
	294660-1	. FASTENER.	2	1
- 34	35-534382	. INSIGNIA,CABIN INTERIOR	4	1
- 35	96-530001-167	. INSERT.	2	1
- 36	96-530001-29	. PANEL	1	1
- 37	96-530001-163	. INSERT.	1	1
- 38	96-530011-601 C	. PANEL,LH FWD.	1	1
- 39	96-530011-611 C	. PANEL,LH REAR	1	1

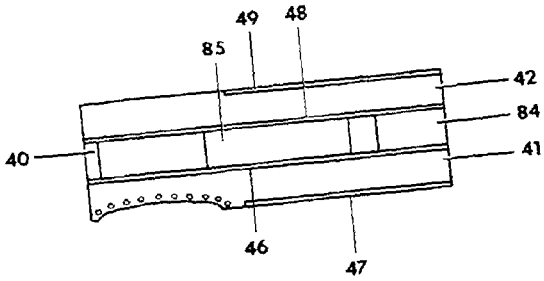

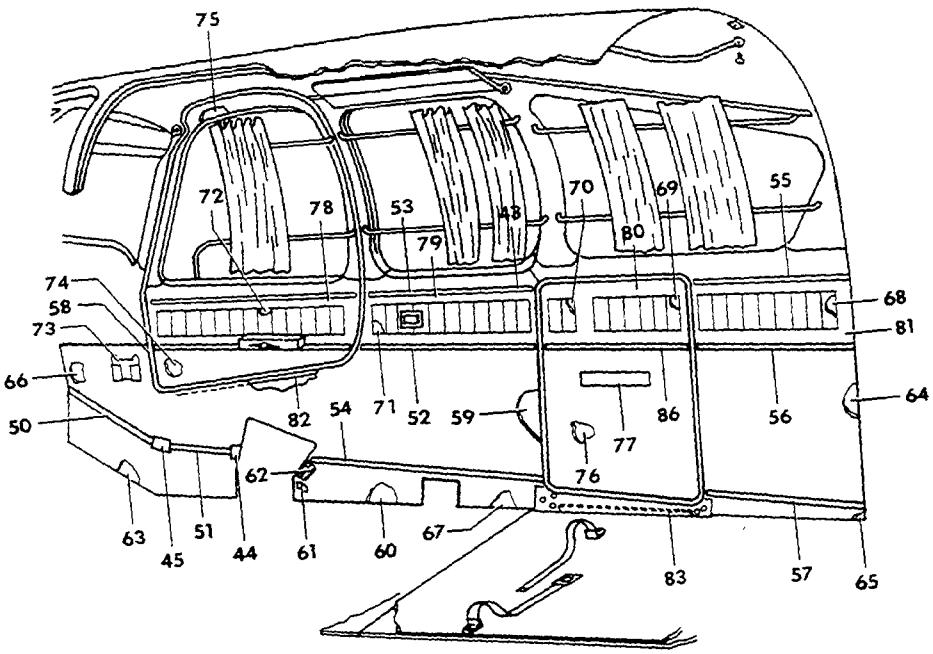

55-311-21

FIGURE 22-02-CABIN UPHOLSTERY
/SHEET 2 OF 2 SHEETS/

SUB-SECT UNIT & ITEM NO.	PART NO.	DESCRIPTION 1 2 3 4 5 6 7	UNITS PER ASSY	USABLE ON CODE
22-02	35-534394-603	PANEL ASSY,HEADLINER.	1	1
- 40	35-534394-11	PANEL,HEADLINER	1	1
- 41	35-534394-47	PANEL,HEADLINER	1	1
- 42	35-534394-53	PANEL,HEADLINER	1	1
- 43	96-530001-227	TRIM,UPPER CENTER RH.	1	4
- 44	96-530001-220	CLIP.	1	1
- 45	96-530001-221	STRAP	2	1
- 46	35-534394-27	TRIM,CENTER RH.	1	1
- 47	35-534394-31	TRIM,RH	1	1
- 48	35-534394-33	TRIM,CENTER LH.	1	1
- 49	35-534394-39	TRIM,LH	1	1
- 50	96-530001-85	TRIM,FWD RH	1	1
- 51	96-530001-79	TRIM,FWD RH	1	1
- 52	96-530001-67	TRIM,CENTER RH.	1	1
- 53	96-530001-65	TRIM,UPPER CENTER RH.	1	1
- 54	96-530001-69	TRIM,LOWER CENTER RH.	1	1
- 55	96-530001-45	TRIM,UPPER AFT RH	1	1
- 56	96-530001-41	TRIM,CENTER AFT RH.	1	1
- 57	96-530001-43	TRIM,LOWER AFT RH	1	1
- 58	95-530002-81	PANEL ASSY,UPHOLSTERY TRIM.	1	1
- 59	96-530001-61	PANEL	1	1
	96-530001-603	PANEL ASSY,SIDE	1	1
- 60	96-530001-71	PANEL	1	1
- 61	35-534202-3	ANGLE,FRONT SEAT PARTITION.	1	1
- 62	35-534201-3	ANGLE,FRONT SEAT PARTITION.	1	1
	96-530001-604	PANEL ASSY,SIDE	1	1
- 63	96-530001-87	PANEL	1	1
- 64	96-530001-37	PANEL	1	1
- 65	96-530001-33	PANEL	1	1
- 66	96-530001-171	PANEL	1	1
- 67	96-530001-175	PANEL	1	1
- 68	96-530001-179	INSERT.	1	1
- 69	96-530001-183	INSERT.	1	1
- 70	96-530001-187	INSERT.	1	1
- 71	96-530001-191	INSERT.	1	1
- 72	96-530001-195	INSERT.	1	1
- 73	35-534300-238	FRAME	1	1
- 74	96-530001-81	PANEL	1	1
- 75	35-534304-79	PANEL	1	1
- 76	96-530001-51	PANEL	1	1
- 77	95-534026	PLACARD,BAGGAGE COMPARTMENT/WITH FIFTH SEAT/.	1	1
	35-534315	PLACARD,BAGGAGE COMPARTMENT/STANDARD/	1	1
- 78	96-530011-623 C	PANEL,CABIN DOOR.	1	1
- 79	96-530011-633 C	PANEL,RH CENTER	1	1
- 80	96-530011-643 C	PANEL,BAGGAGE DOOR.	1	1
- 81	96-530011-653 C	PANEL,RH REAR	1	1
- 82	35-534306-31	ANGLE,CABIN DOOR.	1	1
- 83	96-530001-209	PANEL,BAGGAGE DOOR SCUFF.	1	1
	35-534394-601	PANEL ASSY,HEADLINER.	1	1
- 84	35-534394-37	PANEL	1	1
- 85	35-534394-41	PANEL	1	1
- 86	96-530001-57	STRIP,TRIM.	1	1
	R 96-530001-105	WINDLACE.	1	1

CODES OF EFFECTIVITY

1	TC-1 THRU TC-190	2	TC-1 THRU TC-23
3	TC-24 THRU TC-190	4	TC-19 THRU TC-190
5	TC-1 THRU TC-120	6	TC-121 THRU TC-190

"END"

25-22-03
CABIN UPHOLSTERY
TC-191 THRU TC-1607

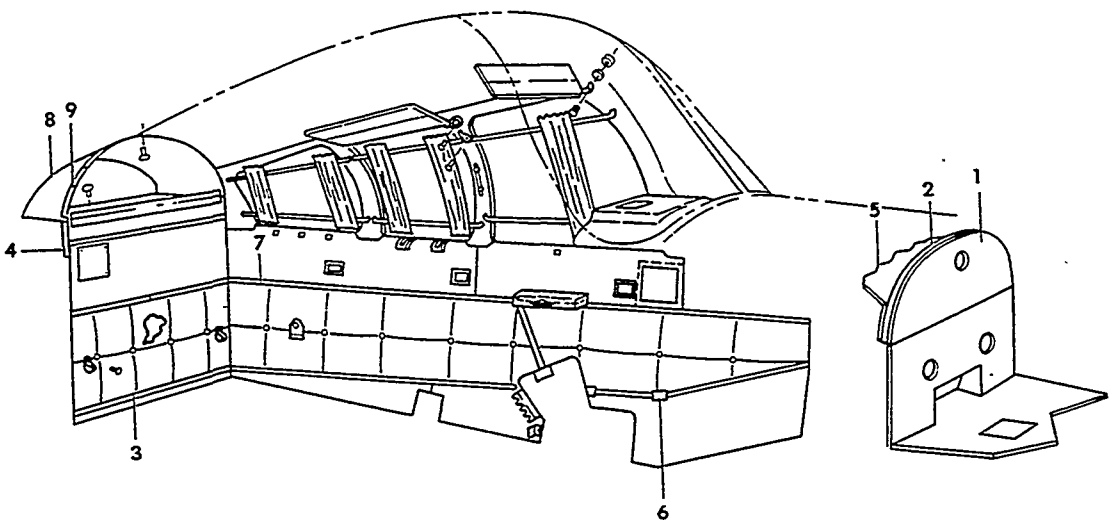

55-311-16

FIGURE 22-03.CABIN UPHOLSTERY
/SHEET 1 OF 4 SHEETS/

SUB-SECT UNIT & ITEM NO.	PART NO.	DESCRIPTION 1 2 3 4 5 6 7	UNITS PER ASSY	USABLE ON CODE
22-03	96-530002-1	UPHOLSTERY INSTL,CABIN.	NP	1
	96-530002-3	UPHOLSTERY INSTL,CABIN.	1	1
- 1	95-530000-21	. PANEL ASSY,FIREWALL	1	1
- 2	95-530000-23	. BLANKET ASSY,FIREWALL	1	1
- 3	96-530001-127	. TRIM,BULKHEAD/STA 170.0/LH.	2	2
	96-530001-129	. TRIM,BULKHEAD/STA 170.0/RH.	2	2
	96-530002-135	. TRIM,BULKHEAD/STA 170.0/LH & RH	2	3
- 4	96-530001-233	. SEAL,HAT SHELF TOP AIR.	2	1
- 5	95-530000-33	. WRAPPER,COWL.	1	1
	96-530002-67	. CLIP.	6	1
	96-530002-69	. CLIP.	10	1
	96-530001-219	. CLIP,LOWER FWD LH	1	1
	96-530001-220	. CLIP,LOWER FWD RH	1	1
- 6	96-530001-221	. STRAP	2	1
	96-530001-85	. TRIM,FWD RH	1	1
	96-530001-79	. TRIM,FWD RH	1	1
	96-530001-67	. TRIM,UPPER CENTER RH.	1	1
	96-530001-69	. TRIM,LOWER CENTER RH.	1	1
	96-530001-41	. TRIM,CENTER AFT RH.	1	1
	96-530001-43	. TRIM,LOWER AFT RH	1	1
- 7	96-530001-25	. TRIM,CENTER LH.	1	2
	96-530002-123	. TRIM,CENTER LH.	1	3
	96-530002-125	. TRIM,CENTER RH.	1	3
	96-530001-27	. TRIM,LOWER AFT LH	1	1
	96-530001-11	. TRIM,LOWER FWD LH	1	1
	R 96-530001-13	. TRIM,LOWER FWD LH	1	1
	35-534394-27	. TRIM,CENTER RH.	1	2
	35-534394-31	. TRIM,RH	1	2
	35-534394-33	. TRIM,CENTER LH.	1	2
	35-534394-39	. TRIM,LH	1	1
	R 96-530001-105	WINDLACE.	1	1
- 8	96-534011-5	. SHELF,HAT	1	1
- 9	96-530001-235	. SEAL,HAT SHELF SIDE AIR	2	1
	96-534024-609	. UPHOLSTERY ASSY,CABIN DOOR ARMREST.	1	1
	96-534024-607 C	. UPHOLSTERY ASSY,SIDE WALL ARMREST LH.	1	1
	96-534024-608 C	. UPHOLSTERY ASSY,SIDE WALL ARMREST RH.	1	1
	35-534315	. PLACARD,BAGGAGE	1	1
	95-530002-93	. STRAP ASSY,BAGGAGE TIE DOWN RH.	1	1
	95-530002-95	. STRAP ASSY,BAGGAGE TIE DOWN LH.	1	1
		/ATTACHING PARTS/		
	AN525-10-10	. SCREW	2	
		----*----		
	111191-06000	. STRAP ASSY,BAGGAGE TIE DOWN LH.	1	1
	111191-02400	. STRAP ASSY,BAGGAGE TIE DOWN RH.	1	1
	NAF1127-18	. BUCKLE,RH	1	1
	35-534394-602	. PANEL ASSY,HEADLINER/USED WITHOUT FRESH AIR/.	1	2
	96-534058-1	. PANEL ASSY,HEADLINER/USED WITHOUT FRESH AIR/.	1	3
	35-534394-37	. . PANEL	1	2
	96-534058-15	. . PANEL	1	3
	35-534394-601	. PANEL ASSY,HEADLINER.	1	2
	96-534058-3	. PANEL ASSY,HEADLINER.	1	3
	35-534394-37	. . PANEL	1	2
	96-534058-15	. . PANEL	1	3
	96-534058-13	. . PANEL	1	3

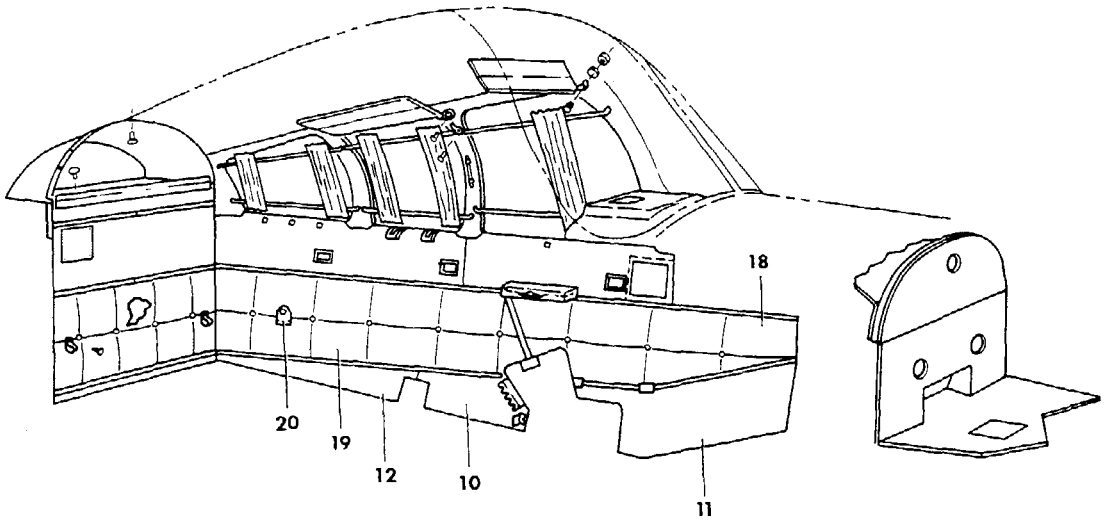

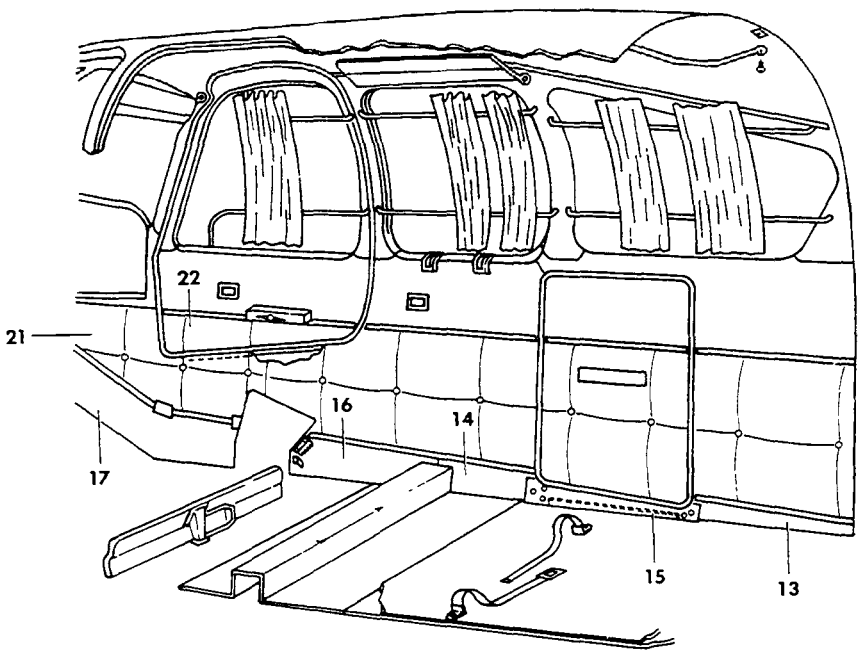

55-311-17

FIGURE 22-03.CABIN UPHOLSTERY
/SHEET 2 OF 2 SHEETS/

ATA CODE & INDEX NO.	PART NO.	DESCRIPTION 1 2 3 4 5 6 7	UNITS PER ASSY	USABLE ON CODE
22-03	96-530001-601	PANEL ASSY,SIDE	1	1
- 10	96-530001-159	PANEL	1	1
- 11	96-530001-9	PANEL ASSY,LOWER LH	1	1
	96-530001-7	PANEL	1	1
- 12	96-530001-31	PANEL ASSY,LOWER LH	1	1
	96-530001-29	PANEL	1	1
- 13	96-530001-35	PANEL ASSY,LOWER AFT RH	1	1
	96-530001-33	PANEL	1	1
- 14	96-530001-177	PANEL ASSY,LOWER	1	1
	96-530001-175	PANEL	1	1
- 15	96-530001-209	PANEL ASSY,LOWER	1	1
- 16	96-530001-603	PANEL ASSY,LOWER	1	1
	96-530001-71	PANEL	1	1
- 17	96-530001-89	PANEL ASSY,LOWER	1	1
	96-530001-87	PANEL	1	1
	96-530002-605	PANEL ASSY,MIDDLE	1	5
- 18	35-534420-63	PANEL ASSY,MIDDLE	1	5
	96-530002-95	PANEL	1	5
	96-530002-97	COVER,PANEL	1	5
	96-530002-43	PANEL ASSY,MIDDLE	1	4
	96-530002-45	PANEL	1	4
- 19	35-534420-57	PANEL ASSY,MIDDLE AFT	1	5
	35-534420-53	PANEL	1	5
	35-534420-55	COVER,PANEL	1	5
- 20	95-530001-113	DOOR ASSY	1	1
	95-530001-111	DOOR	1	1
- 21	96-530002-103	PANEL ASSY,MIDDLE FWD	1	5
	96-530001-171	PANEL	1	5
	96-530002-101	COVER,PANEL	1	5
	96-530001-173	PANEL ASSY,MIDDLE FWD	1	4
	96-530001-171	PANEL	1	4
- 22	35-534420-25	PANEL ASSY,LOWER DOOR	1	5
	96-530002-17	PANEL	1	5

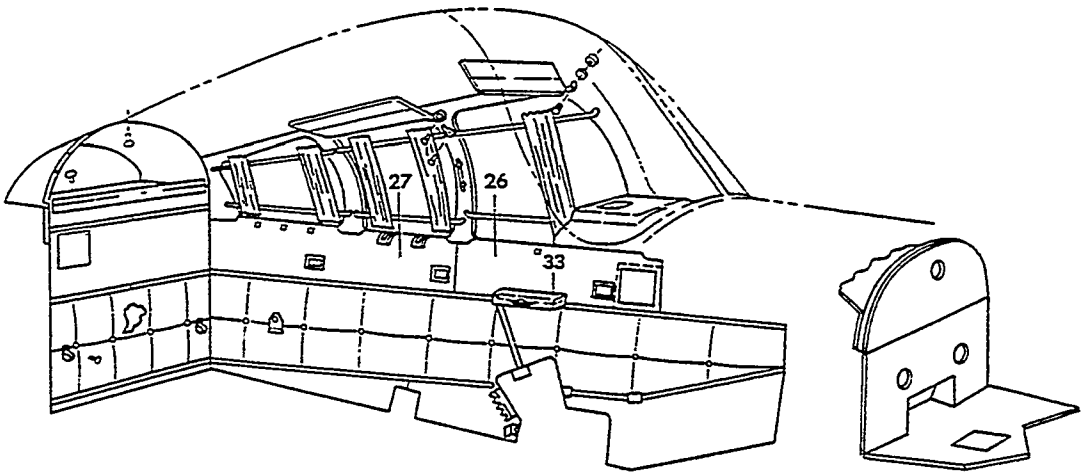

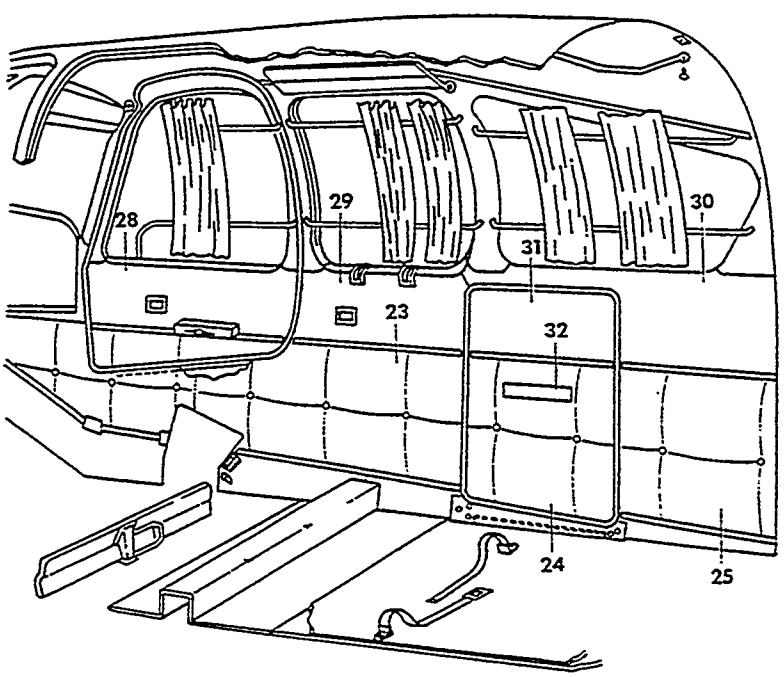

55-311-18

FIGURE 22-03.CABIN UPHOLSTERY
/SHEET 3 OF 4 SHEETS/

SUB-SECT UNIT & ITEM NO.	PART NO.	DESCRIPTION 1 2 3 4 5 6 7	UNITS PER ASSY	USABLE ON CODE
22-03	96-530002-15	. PANEL ASSY,LOWER DOOR	1	4
	96-530002-17	. . PANEL	1	4
- 23	35-534420-29	. PANEL ASSY,MIDDLE RH.	1	5
	96-530002-11	. . PANEL	1	5
	35-534420-27	. . COVER,PANEL	1	5
	96-530002-9	. PANEL ASSY,MIDDLE RH.	1	4
	96-530002-11	. . PANEL	1	4
- 24	35-534420-37	. PANEL ASSY,LOWER BAGGAGE DOOR	1	5
	35-534406-33	. . PANEL	1	5
	35-534420-35	. . COVER,PANEL	1	5
	96-530001-53	. PANEL ASSY,LOWER BAGGAGE DOOR	1	4
	96-530001-51	. . PANEL	1	4
- 25	35-534420-43	. PANEL ASSY,MIDDLE AFT RH.	1	5
	96-530001-37	. . PANEL	1	5
	35-534420-41	. . COVER,PANEL	1	5
	96-530001-39	. PANEL ASSY,MIDDLE AFT RH.	1	4
	96-530001-37	. . PANEL	1	4
	96-530002-636	. PANEL ASSY,UPPER.	1	5
- 26	96-530002-47	. PANEL ASSY,UPPER FWD LH	1	1
	96-530002-49	. . PANEL	1	2
	96-530002-131	. . PANEL	1	3
	96-530002-33	. . COVER,PANEL	1	1
- 27	96-530002-39	. PANEL ASSY,UPPER.	1	1
	96-530002-41	. . PANEL	1	1
	96-530002-31	. . COVER,PANEL	1	1
- 28	96-530002-19	. PANEL ASSY,DOOR UPPER	1	1
	96-530011-1	. . PANEL	1	1
	96-530002-21	. . COVER,PANEL	1	1
	A872-012-1	. . NUT	1	1
- 29	96-530002-13	. PANEL ASSY,UPPER.	1	1
	96-530002-57	. . PANEL	1	1
- 30	96-530002-7	. . PANEL ASSY,UPPER.	1	1
	96-530002-35	. . PANEL	1	1
	96-530002-27	. . COVER,PANEL	1	1
- 31	96-530002-5	. PANEL ASSY,UPPER BAGGAGE DOOR	1	1
	35-534406-37	. . PANEL	1	1
	96-530002-641	. . COVER,PANEL	1	1
- 32	95-534026	. PLACARD,BAGGAGE/270 LBS/.	1	1
	96-534046	. PLACARD,BAGGAGE/400 LBS/.	1	1
	96-534028	. PLACARD,BAGGAGE/270 LBS/.	1	1
- 33	R 35-534417	. PANEL,ARMREST	1	1

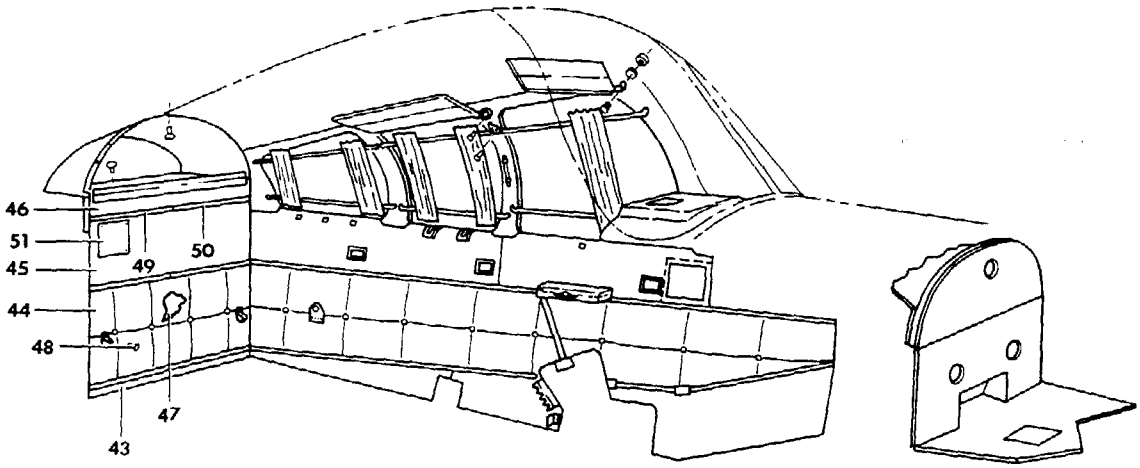

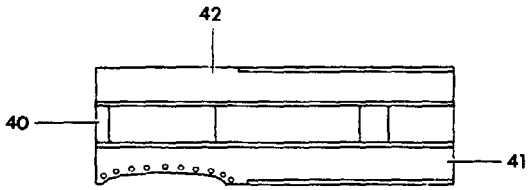

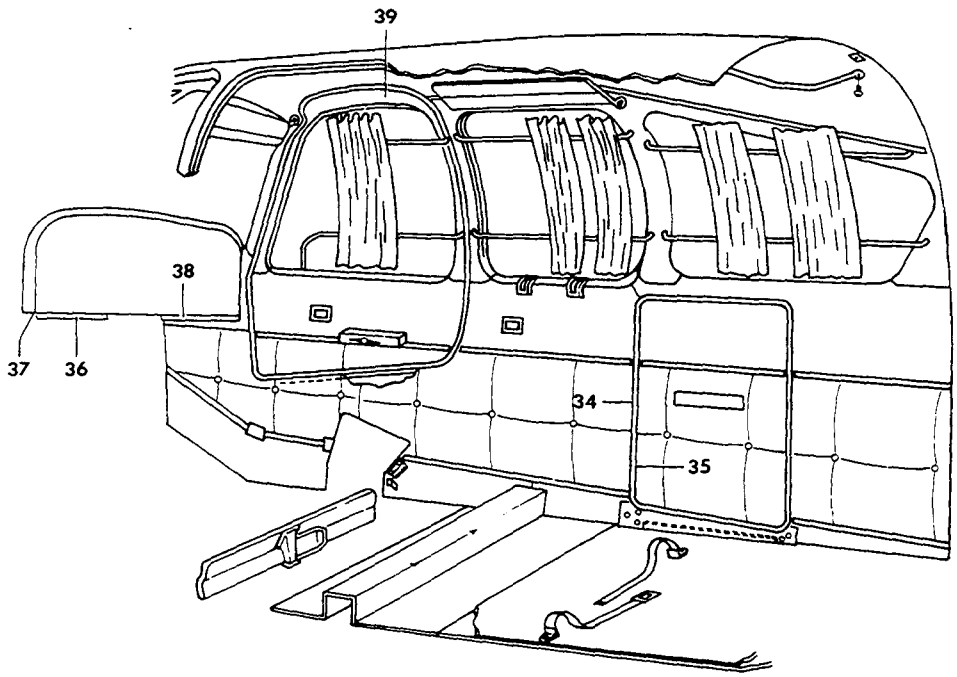

55-311-19

FIGURE 22-03.CABIN UPHOLSTERY
/SHEET 4 OF 4 SHEETS/

SUB-SECT UNIT & ITEM NO.	PART NO.	DESCRIPTION 1 2 3 4 5 6 7	UNITS PER ASSY	USABLE ON CODE
22-03	35-534420-83	WINDLACE,BAGGAGE DOOR	1	5
- 34	96-530001-147	WINDLACE,BAGGAGE DOOR	1	4
- 35	35-534406-87	SEAL,BAGGAGE DOOR	1	4
	35-534420-85	WINDLACE,BAGGAGE DOOR	1	4
- 36	96-530002-75	PANEL ASSY,INST PANEL TRIM RH	1	1
	96-530002-73	. PANEL	1	1
- 37	1195	FASTENER,BUMPER PANEL	7	1
- 38	96-530002-79	PANEL ASSY,INST PANEL TRIM LH	1	1
	96-530002-77	. PANEL	1	1
- 39	35-534304-93	PANEL ASSY,UPPER DOOR	1	1
	35-534304-79	. PANEL	1	1
- 40	35-534394-11	PANEL ASSY,HEADLINER.	1	1
- 41	35-534394-47	PANEL ASSY,HEADLINER.	1	1
- 42	35-534394-53	PANEL ASSY,HEADLINER.	1	
	35-534494-601	PANEL ASSY,HEADLINER.	1	1
- 43	96-530001-117	PANEL ASSY,LOWER.	1	1
	96-530001-115	. PANEL	1	1
- 44	35-534420-67	PANEL ASSY,MIDDLE	1	5
	96-530001-111	. PANEL	1	5
	35-534420-65	. COVER,PANEL	1	5
	96-530001-113	PANEL ASSY,MIDDLE	1	4
- 45	96-530002-636	PANEL ASSY,UPPER.	1	5
	96-530002-53	PANEL ASSY,UPPER.	1	1
	96-530002-81	. PANEL	1	1
	96-530002-29	. COVER,PANEL	1	1
- 46	96-530002-61	PANEL ASSY,HEADLINER.	1	1
	96-530002-59	. PANEL	1	1
- 47	95-440006-19	PANEL	1	1
		/ATTACHING PARTS/		
- 48	NAS384-6	SCREW	4	
	NAS391-6	WASHER.	4	
	A1777-62	NUT	4	
		----*----		
- 49	96-530002-63	TRIM.	1	1
- 50	96-530002-65	TRIM.	1	1
- 51	118650	HOLDER,LICENSE.	1	1

CODES OF EFFECTIVITY

1 TC-191 THRU TC-1607 2 TC-191 THRU TC-954
3 TC-955 THRU TC-1607 4 TC-191 THRU TC-501
5 TC-502 THRU TC-1607

"END"

25-22-05
CABIN UPHOLSTERY
TE-452 THRU TE-767

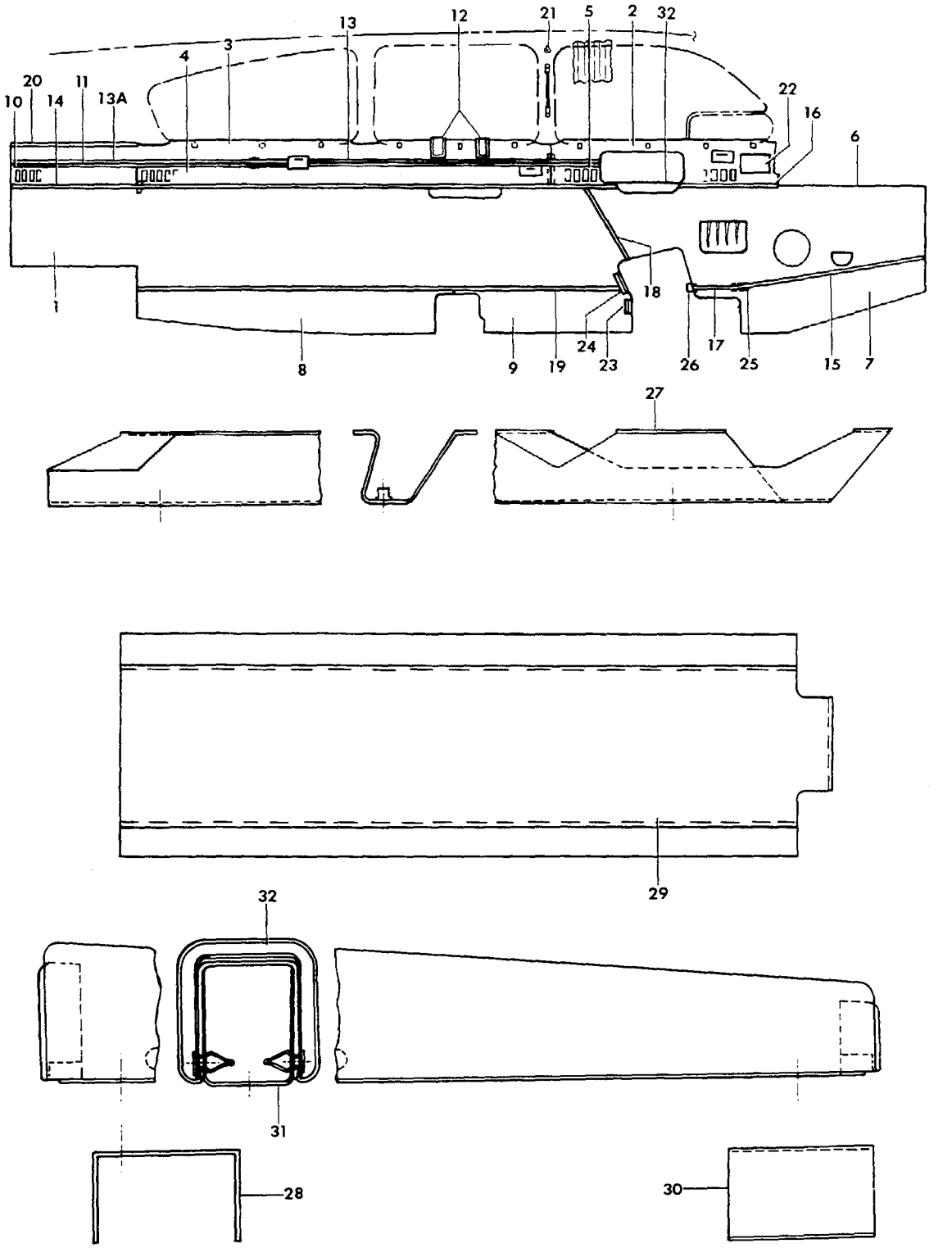

FIGURE 22-05.CABIN UPHOLSTERY
/SHEET 1 OF 5 SHEETS/

ATA CODE & INDEX NO.	PART NO.	DESCRIPTION 1 2 3 4 5 6 7	UNITS PER ASSY	USABLE ON CODE
22-05	96-530006-1	UPHOLSTERY INSTL,CABIN/STD BAGGAGE DOOR/. . . .	NP	1
	96-530006-3	UPHOLSTERY INSTL,CABIN/UTILITY BAGGAGE DOOR/. .	NP	1
- 1	96-530006-5	. PANEL ASSY,LH	1	1
- 2	96-530006-9	. PANEL ASSY,LH	1	1
	96-530006-11	. . PANEL	1	1
	96-530006-17	. . COVER ASSY,DIELECTRIC	1	1
- 3	96-530006-19	. PANEL ASSY,LH	1	1
- 4	96-530006-29	. PANEL ASSY,LH	1	1
	96-530006-25	. . PANEL	1	1
	96-530006-27	. . COVER ASSY.	1	1
- 5	96-530006-131	. PANEL ASSY,LH	1	1
	96-530006-135	. . PANEL	1	1
	96-530006-133	. . COVER ASSY.	1	1
- 6	96-530004-49C	. PANEL ASSY,LH	1	1
- 7	96-530004-107	. PANEL ASSY,LH	1	1
- 8	96-530004-115	. PANEL ASSY,LH	1	1
- 9	96-530004-111	. PANEL ASSY,LH	1	1
- 10	96-530006-125	. PANEL ASSY,LH	1	1
	96-530006-129	. . PANEL	1	1
	96-530006-127	. . COVER ASSY.	1	1
- 11	96-530006-23	. INSET,TRIM.	1	1
- 12	35-534412	. ESCUTCHEON.	1	1
- 13	96-530005-13	. TRIM,LH FWD	1	1
- 13A	96-530006-141	. TRIM,LH AFT	1	1
- 14	96-530004-47	. TRIM.	1	1
- 15	96-530004-137	. TRIM.	1	1
- 16	96-530004-143	. TRIM.	1	1
- 17	96-530004-139	. TRIM.	1	1
- 18	35-534420-49	. TRIM.	1	1
- 19	96-530004-141	. TRIM.	1	1
- 20	96-534061-21	. TRIM.	1	1
- 21	4840719	. HOOK.	1	1
- 22	96-530002-51	. PANEL,PLATE BACKING	1	1
- 23	35-534201-2	. ANGLE,LH.	1	1
- 24	35-534202-2	. ANGLE,LH.	1	1
- 25	96-530001-221	. STRAP	1	1
- 26	96-530001-219	. CLIP.	1	1
	96-534079-1	. ARMREST INSTL	NP	1
- 27	96-534079-5	. . BRACKET ASSY,RH FWD ARMREST	1	1
	96-534079-3	. . . PLATE	1	1
	96-534079-19	. . . BRACKET	1	1
	K1000-3BC	. . . NUT,ANCHOR.	2	1
- 28	96-534079-9	. . CHANNEL ASSY,LH & RH ARMREST.	2	1
	96-534079-7	. . . CHANNEL	1	1
	K1000-3BC	. . . NUT,ANCHOR.	1	1
- 29	96-534079-23	. . BRACKET ASSY,LH FWD ARMREST	1	1
	96-534079-21	. . . BRACKET	1	1
	K1000-3BC	. . . NUT,ANCHOR.	2	1
- 30	33-534024-19	. . BRACKET ASSY,LH & RH AFT ARMREST.	2	1
	33-534024-21	. . . BRACKET	1	1
	K1000-3BC	. . . NUT,ANCHOR.	2	1
	96-534080-43	. . ARMREST ASSY,LH FWD	1	1
		/ATTACHING PARTS/		
	AN520-10R14	. . SCREW	2	
	AN960-10	. . WASHER.	2	
		——*——		
- 31	96-534080-35	. . . SUPPORT ASSY,LH FWD ARMREST	1	1
	96-534080-29	. . . . BRACKET,LH FWD ARMREST.	1	1
	96-534080-33	. . . . ESCUTCHEON.	1	1
- 32	96-534080-41	. . . COVER ASSY,LH FWD ARMREST	1	1
	96-534080-39	. . . . PANEL,LH FWD ARMREST/UPHOLSTERED/ . . .	1	1
	HS49014	. . . . CLIP,LH FWD ARMREST	4	1

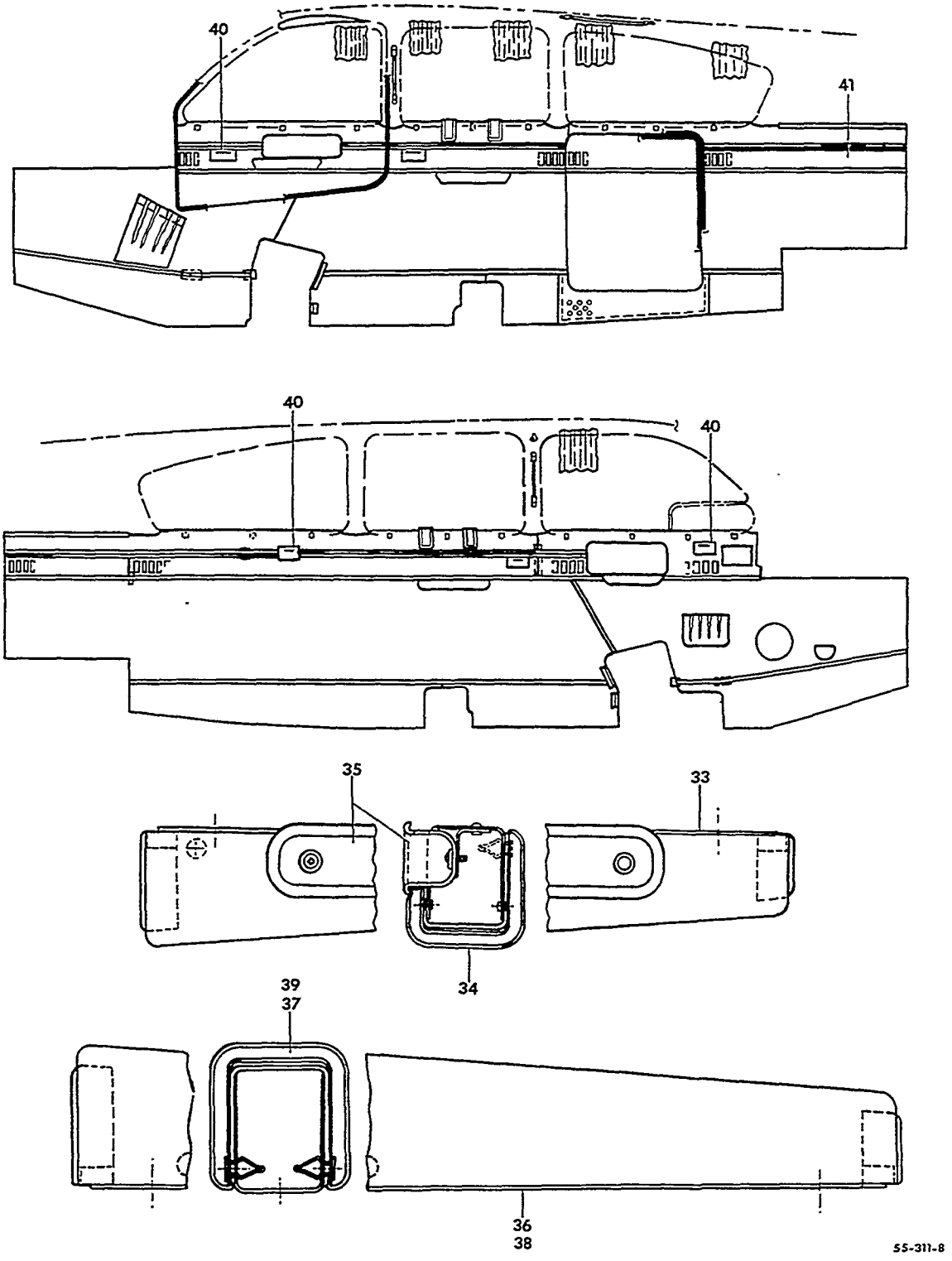

FIGURE 22-05.CABIN UPHOLSTERY
/SHEET 2 OF 5 SHEETS/

ATA CODE & INDEX NO.	PART NO.	DESCRIPTION 1 2 3 4 5 6 7	UNITS PER ASSY	USABLE ON CODE
22-05	96-534080-25	. . ARMREST ASSY,RH FWD	1	1
		/ATTACHING PARTS/		
	AN520-10R14	. . SCREW	2	
	AN960-10	. . WASHER.	2	
		——*——		
- 33	96-534080-15	. . . SUPPORT ASSY,RH FWD ARMREST	1	1
	96-534080-3	. . . . BRACKET,RH FWD ARMREST SUPPORT.	1	1
	96-534080-11	. . . . ESCUTCHEON,RH FWD ARMREST	1	1
	96-534080-17	. . . . ANGLE	1	1
- 34	96-534080-21	. . . COVER ASSY,RH FWD ARMREST	1	1
	96-534080-7	. . . . PANEL,RH FWD ARMREST/UPHOLSTERED/	1	1
	HS49014	. . . . CLIP.	4	1
- 35	35-534244-1	. . . CUP,RH FWD ARMREST DOOR PULL.	1	1
		/SUPERSEDES 35-534244/		
		/ATTACHING PARTS/		
	NAS385-6-8	. . . SCREW	2	
	NAS391-6	. . . WASHER.	2	
		——*——		
	96-534080-23	. . ARMREST ASSY,LH AFT	1	1
		/ATTACHING PARTS/		
	AN520-10R14	. . SCREW	2	
	AN960-10	. . WASHER.	2	
		——*——		
- 36	96-534080-13	. . . SUPPORT ASSY,LH AFT ARMREST	1	1
	96-534080-1	. . . . BRACKET,LH AFT ARMREST SUPPORT.	1	1
	96-534080-9	. . . . ESCUTCHEON.	1	1
- 37	96-534080-19	. . . COVER ASSY,LH AFT ARMREST	1	1
	96-534080-5	. . . . PANEL,LH AFT ARMREST/UPHOLSTERED/	1	1
	HS49014	. . . . CLIP,LH AFT ARMREST	4	1
	96-534080-24	. . ARMREST ASSY,RH AFT	1	1
		/ATTACHING PARTS/		
	AN520-10R14	. . SCREW	2	
	AN960-10	. . WASHER.	2	
		——*——		
- 38	96-534080-14	. . . SUPPORT ASSY,RH AFT ARMREST	1	1
	96-534080-2	. . . . BRACKET,RH AFT ARMREST SUPPORT.	1	1
	96-534080-9	. . . . ESCUTCHEON.	1	1
- 39	96-534080-19	. . . COVER ASSY,RH AFT ARMREST	1	1
	96-534080-5	. . . . PANEL,RH AFT ARMREST/UPHOLSTERED/	1	1
	HS49014	. . . . CLIP,RH AFT ARMREST	4	1
	96-534078-3	. ASH TRAY INSTL.	NP	1
	96-534078-7	. . CLIP.	1	1
	96-534078-9	. . BRACKET	1	1
	35-534415-5	. . BRACKET	6	1
	35-534415-9	. . BRACKET	1	1
- 40	33-534042-1	. . ASH TRAY ASSY	5	1
		/ATTACHING PARTS/		
	PK74XZ6-8	. . SCREW	2	
	A6500-6Z1	. . NUT	2	
		——*——		
	S23AR-RT-CS	. . . ASH TRAY.	1	1
	33-534042-3	. . . HANDLE.	1	1
		/ATTACHING PARTS/		
	PK76XZ6-6	. . . SCREW	2	
		——*——		
- 41	96-530006-39	. PANEL ASSY,RH	1	1
	96-530006-41	. . COVER ASSY,	1	1
	96-530006-43	. . PANEL	1	1

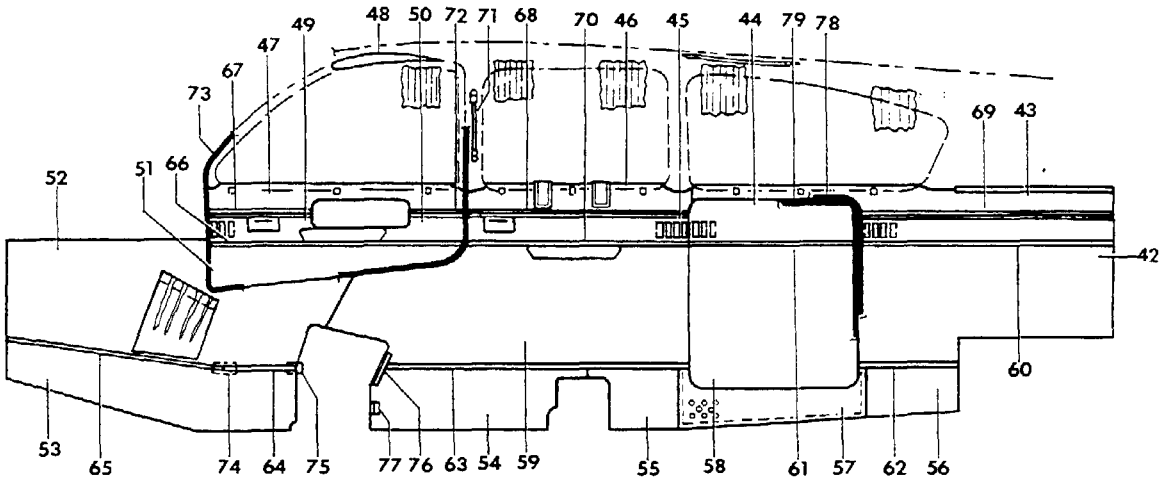

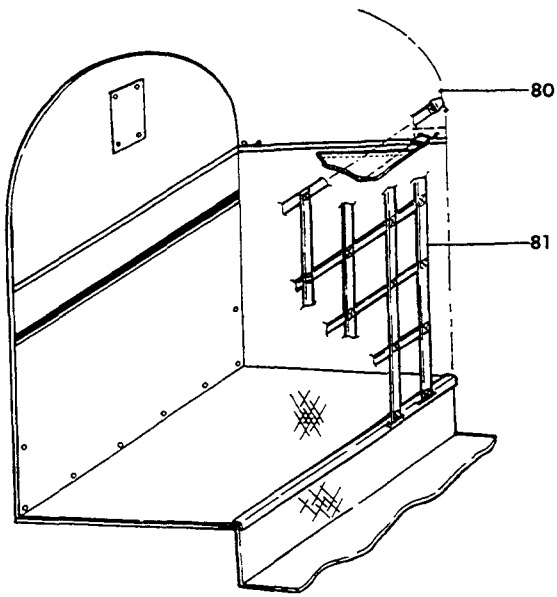

SS-311-9

FIGURE 22-05.CABIN UPHOLSTERY
/SHEET 3 OF 5 SHEETS/

ATA CODE & INDEX NO.	PART NO.	DESCRIPTION 1 2 3 4 5 6 7	UNITS PER ASSY	USABLE ON CODE
22-05 - 42	96-530006-35	. PANEL ASSY,RH	1	1
- 43	96-530006-45	. PANEL ASSY,RH	1	1
- 44	96-530006-71	. PANEL ASSY,RH	1	1
	96-530006-73	. . COVER ASSY.	1	1
	96-530004-103	. . PANEL	1	1
- 45	96-530006-65	. PANEL ASSY,RH	1	1
	96-530006-67	. . COVER ASSY.	1	1
	96-530006-69	. . PANEL	1	1
- 46	96-530006-59	. PANEL ASSY,RH	1	1
- 47	96-530006-55	. PANEL ASSY,RH	1	1
- 48	35-534304-93	. PANEL ASSY,RH	1	1
- 49	96-530006-49	. PANEL ASSY,RH	1	1
- 50	95-530005-53	. PANEL ASSY,RH	1	1
- 51	96-530004-59C	. PANEL ASSY,RH	1	1
- 52	96-530004-57	. PANEL ASSY,RH	1	1
- 53	96-530004-119	. PANEL ASSY,RH	1	1
- 54	96-530004-123	. PANEL ASSY,RH	1	1
- 55	96-530004-127	. PANEL ASSY,RH	1	1
- 56	96-530004-131	. PANEL ASSY,RH	1	1
- 57	96-530001-209C	. PANEL ASSY,RH	1	1
- 58	96-530004-63	. PANEL ASSY,RH	1	1
- 59	96-530004-61	. PANEL ASSY,RH	1	1
- 60	96-530004-45	. TRIM.	1	1
- 61	96-530004-153	. TRIM.	1	1
- 62	96-530004-155	. TRIM.	1	1
- 63	96-530004-149	. TRIM.	1	1
- 64	96-530004-147	. TRIM.	1	1
- 65	96-530004-145	. TRIM.	1	1
- 66	96-530001-77	. TRIM.	1	1
- 67	96-530005-63	. TRIM.	1	1
- 68	96-530006-63	. TRIM.	1	1
- 69	96-530006-33	. TRIM.	1	1
- 70	96-530004-151	. TRIM.	1	1
- 71	34CB759	. HANDLE.	2	1
		/ATTACHING PARTS/		
	NAS387-1032-8P	. SCREW	2	
		——*——		
- 72	96-530005-59	. TRIM.	1	1
- 73	50-534033-179	. STRIP	1	1
		/ATTACHING PARTS/		
	PK89XA8-8	. SCREW	8	
		——*——		
- 74	96-530001-221	. STRAP	2	1
- 75	96-530001-220	. CLIP.	1	1
- 76	35-534201-3	. ANGLE	1	1
- 77	35-534202-3	. ANGLE	1	1
- 78	35-534420-83C	. WINDLACE.	1	1
- 79	35-534420-85C	. WINDLACE.	1	1
- 80	6411B	. LOOP,FOOTMAN.	3	1
		/ATTACHING PARTS/		
	NAS387-832-10	. SCREW	2	
		——*——		
- 81	96-534049-23	. WEB ASSY.	1	1
	414-180644-9	. . HOOK.	3	1
	6411B	. . LOOP,FOOTMAN.	5	1
		/ATTACHING PARTS/		
	NAS387-832	. . SCREW	2	
		——*——		

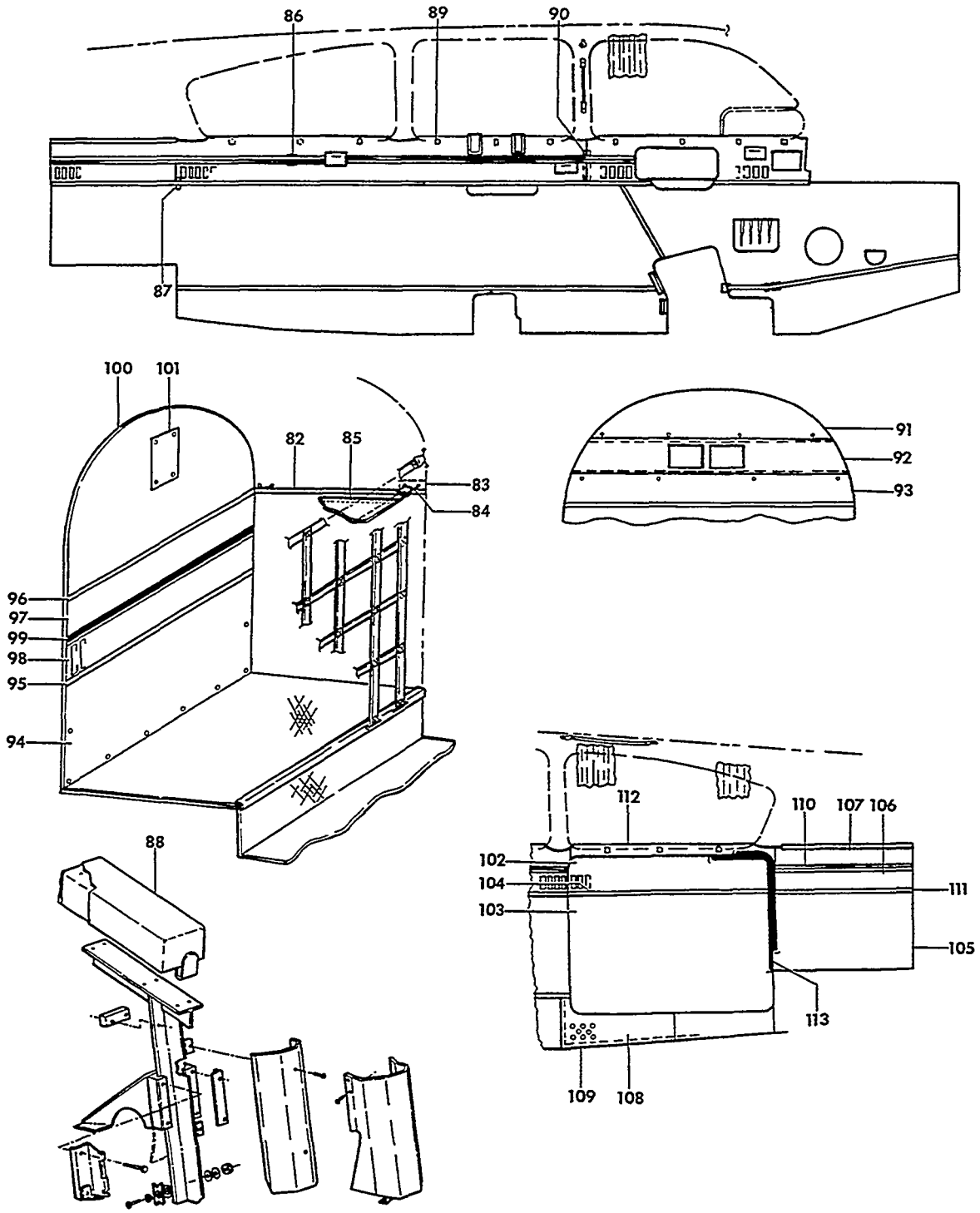

FIGURE 22-05.CABIN UPHOLSTERY
/SHEET 4 OF 5 SHEETS/

ATA CODE & INDEX NO.	PART NO.	DESCRIPTION 1 2 3 4 5 6 7	UNITS PER ASSY	USABLE ON CODE
22-05	96-534061	. SHELF INSTL,HAT STOWAGE	NP	1
	96-534061-21	. . TRIM ASSY,LH.	1	1
	96-534061-22	. . TRIM ASSY,RH.	1	1
- 82	96-534061-23	. . . TRIM,LH	1	1
	96-534061-24	. . . TRIM,RH	1	1
- 83	96-534061-7	. . . DOUBLER,LH.	2	1
	96-534061-8	. . . DOUBLER,RH.	2	1
- 84	6411B	. . LOOP,FOOTMAN.	4	1
		/ATTACHING PARTS/		
	NAS384-10P	. . SCREW	2	
		——*——		
- 85	96-534061-3	. . NET ASSY,HAT SHELF.	1	1
- 86	50-534475-101	. PLATE	AR	1
	AN507-6R8	. SCREW	AR	1
	6S	. WELLNUT	AR	1
- 87	50-534475-101	. PLATE	AR	1
- 88	96-530006-77	. COVER ASSY,CENTER ARMREST	1	1
- 89	96-530002-69	. CLIP.	13	1
- 90	33-530003-89	. BRACKET	1	1
	96-530002-67	. CLIP.	6	1
- 91	96-530004-171	. PANEL ASSY.	1	1
- 92	96-530004-175	. COVER ASSY.	1	1
- 93	96-530004-177	. PANEL ASSY.	1	1
- 94	96-530004-77	. PANEL ASSY.	1	1
		/ATTACHING PARTS/		
	NAS387-832-8P	. SCREW	14	
	NAS391B8P	. WASHER.	14	
		——*——		
- 95	96-530004-187	. TRIM.	1	1
- 96	96-534049-39	. TRIM.	1	1
- 97	96-530006-117	. PANEL ASSY.	1	1
- 98	96-530006-111	. PANEL ASSY.	1	1
	96-530006-113	. . COVER ASSY.	1	1
	96-530006-115	. . PANEL	1	1
- 99	96-530006-109	. TRIM.	1	1
-100	96-530004-81	. PANEL ASSY.	1	1
-101	118650	. HOLDER.	1	1
-102	96-530006-81	. PANEL ASSY,UTILITY BAGGAGE DOOR	1	1
-103	96-530004-189	. PANEL ASSY,UTILITY BAGGAGE DOOR	1	1
-104	96-530004-157	. TRIM,UTILITY BAGGAGE DOOR	1	1
		NOTE THE FOLLOWING TRIM,WINDLACE & PANEL ASSEMBLIES ARE USED IN AIRCRAFT EQUIPPED WITH THE UTILITY BAGGAGE DOOR.		
-105	96-530006-87	. PANEL ASSY.	1	1
-106	96-530006-91	. PANEL ASSY.	1	1
-107	96-530006-97	. PANEL ASSY.	1	1
-108	96-420016-89C	. PANEL ASSY.	1	1
-109	96-420016-113C	. SEAL.	1	1
-110	96-530006-85	. TRIM.	1	1
-111	96-530006-101	. TRIM.	1	1
-112	96-530006-69	. PANEL ASSY.	1	1
-113	96-420016-115C	. WINDLACE.	1	1

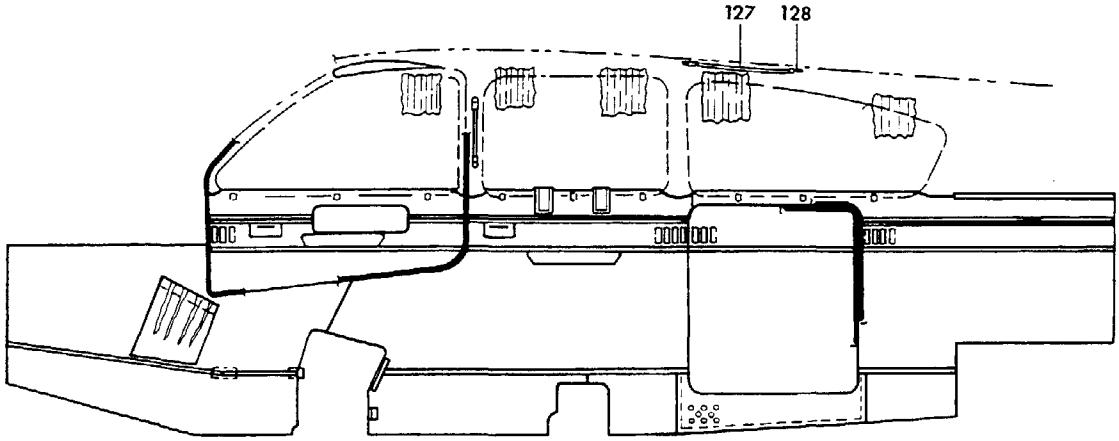

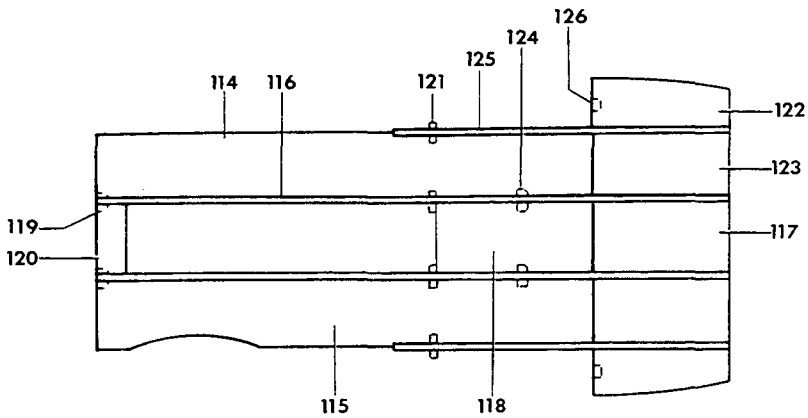

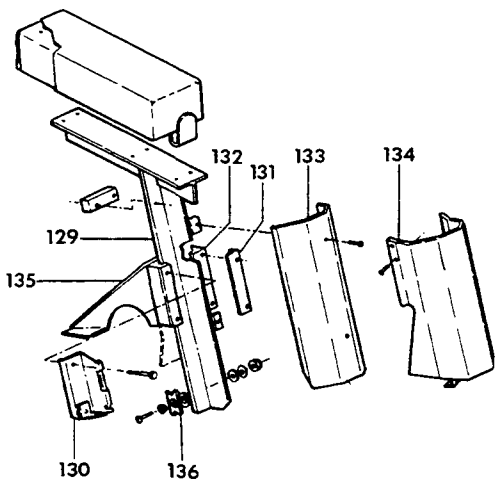

55-311-11

FIGURE 22-05.CABIN UPHOLSTERY
/SHEET 5 OF 5 SHEETS/

ATA CODE & INDEX NO.	PART NO.	DESCRIPTION 1 2 3 4 5 6 7	UNITS PER ASSY	USABLE ON CODE
22-05	96-530015-1	HEADLINER INSTL	NP	1
	96-530015-3	HEADLINER INSTL/WITH FIFTH & SIXTH SEAT/	NP	1
-114	96-530015-5	. PANEL ASSY	1	1
-115	96-530015-9	. PANEL ASSY	1	1
-116	96-530015-11	. TRACK,LH	1	1
	96-530015-12	. TRACK,RH	1	1
-117	96-530015-13	. PANEL ASSY,CENTER	1	1
-118	96-530015-17	. PANEL ASSY/STD/	1	1
	96-530015-21	. PANEL ASSY/OPT WITH 5TH & 6TH SEAT/	1	1
-119	96-530015-25	. PLATE	2	1
		/ATTACHING PARTS/		
	AN507-6R	. SCREW	1	
	6S	. WELLNUT	1	
		----*----		
-120	96-530015-27	. PANEL ASSY	1	1
-121	96-530015-43	. ANGLE	4	1
-122	96-530015-35	. PANEL ASSY,LH	1	1
	96-530015-36	. PANEL ASSY,RH	1	1
-123	96-530015-41	. PANEL ASSY,LH	1	1
	96-530015-42C	. PANEL ASSY,RH	1	1
-124	50-534475-101	. PLATE	18	1
-125	96-534049-41	. TRACK,LH	1	1
	96-534049-43	. TRACK,RH	1	1
	6S	. WELLNUT	24	1
	294660-1	. FASTENER,UPHOLSTERY	AR	1
-126	96-534049-25	. ANGLE	2	1
	95-534042	STRAP INSTL,COAT HANGER/WITH 5TH & 6TH SEAT/	NP	1
	35-534399	STRAP INSTL,COAT HANGER/STD/	NP	1
-127	1440-14	. STRAP,COAT HANGER	1	1
		/ATTACHING PARTS/		
	NAS387-832-10P	. SCREW,FWD	1	
	100951S063ZT	. WASHER,FWD	1	
	NAS1329A8K45	. NUT,FWD	1	
	NAS391-8P	. WASHER,FWD & AFT	1	
	NAS387R8	. SCREW,AFT	1	
	35-534399-3	. SPACER,AFT	1	1
	AN366F832	. NUTPLATE,AFT	1	1
		----*----		
-128	95-534042-3	. END COVER,STRAP	1	1
	35-534372-77	ARMREST INSTL,FRONT SEAT	NP	1
-129	33-530003-621C	. ARMREST ASSY,FRONT SEAT	1	1
-130	35-534372-5	. CATCH ASSY	1	1
-131	35-534372-25	. ANGLE	1	1
-132	35-534372-41	. GUIDE	2	1
-133	35-534372-99	. COVER	1	1
-134	35-534372-85	. COVER ASSY	1	1
	35-534372-45	. . CLIP	1	1
	35-534372-39	. . COVER	1	1
-135	35-534372-91	. BRACKET ASSY	1	1
	35-534372-79	. . BRACKET	1	1
	35-534372-81	. . PLATE	1	1
	35-534372-81	. . PLATE	1	1
	35-534372-49	. . PLATE	1	1
	35-534372-31	. . PLATE	1	1
-136	50-534073-1	. CAM	1	1
		/ATTACHING PARTS/		
	AN525-832-11	. SCREW	1	
	105739X-XP0221	. BUSHING	1	1
	105739X-XR0150	. BUSHING	1	1
	AN960-10L	. WASHER	2	1
	MS20365-832	. NUT	1	1
		----*----		

CODES OF EFFECTIVITY

1 TE-452 THRU TE-767

"END"

25-22-07
CABIN UPHOLSTERY
TE-768 THRU TE-942 EXCEPT TE-938

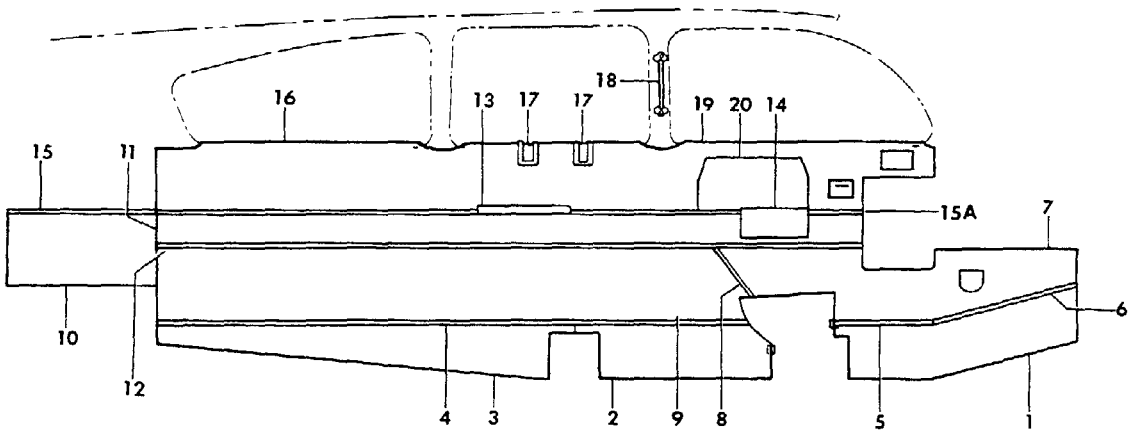

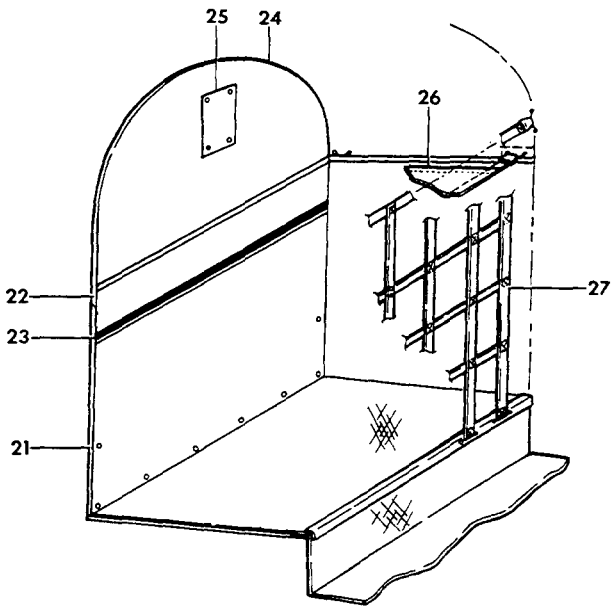

55-311-22

FIGURE 22-07.CABIN UPHOLSTERY
/SHEET 1 OF 2 SHEETS/

ATA CODE & INDEX NO.	PART NO.	DESCRIPTION 1 2 3 4 5 6 7	UNITS PER ASSY	USABLE ON CODE
22-07	96-530007-9	UPHOLSTERY INSTL,CABIN/STD BAGGAGE DOOR/. . . .	NP	1
	96-530007-11	UPHOLSTERY INSTL,CABIN/OPT UTILITY BAGGAGE DR/.	NP	1
	96-530007-229	. WRAPPER,HALF/COWL/.	2	1
	96-530007-223	. BLANKET,LWR NOSE.	1	1
	96-530007-233	. BLANKET,LWR NOSE.	1	1
	96-530007-235	. BLANKET,UPPER NOSE.	1	1
	96-530007-301	. CARPET ASSY,LH NOSE	1	1
	96-530007-303	. CARPET ASSY,RH NOSE	1	1
- 1	96-530007-135	. PANEL ASSY,LH	1	1
- 2	96-530007-29	. PANEL ASSY,LH	1	1
- 3	96-530007-51	. PANEL ASSY,LH	1	1
- 4	96-530007-47	. TRIM,LH	1	1
- 5	96-530007-33	. TRIM,LH	1	1
- 6	96-530007-39	. TRIM,LH	1	1
- 7	96-530007-181	. PANEL ASSY,LH	1	1
- 8	96-530007-41	. TRIM ASSY,LH.	1	1
- 9	96-530007-61	. PANEL ASSY,LH	1	1
- 10	96-530007-57	. PANEL ASSY.	2	1
- 11	96-534120	. PANEL ASSY,CONSOLE.	1	1
- 12	96-530007-45	. TRIM.	1	1
- 13	96-534122-1	. ARMREST ASSY,LH/PASSENGER/.	1	1
- 14	96-534096-1	. ARMREST ASSY/PILOT COPILOT/	2	1
- 15	96-530007-295	. TRIM,LH	1	1
- 15A	96-530007-35	. TRIM,LH	1	1
- 16	96-530007-23	. PANEL ASSY,LH	1	1
- 17	35-534412	. ESCUTCHEON,WINDOW LATCH	2	1
- 18	34CB759	. HANDLE,PASSENGER ASSIST	2	1
- 19	96-530007-15	. PANEL ASSY,LH	1	1
- 20	58-530042-3	. PANEL ASSY,LH/PILOT RECESS/	1	1
	96-534103	. EMBLEM,BEECH.	1	1
- 21	96-530007-69	. PANEL ASSY/CARPETED/.	1	1
- 22	96-530007-261	. PANEL ASSY/CORRUGATED/.	1	1
- 23	96-530007-73	. TRIM.	1	1
- 24	96-530007-65	. PANEL ASSY.	1	1
- 25	118650	. HOLDER.	1	1
- 26	58-530030-11	. NET ASSY,HAT SHELF.	1	1
- 27	96-534049-23	. WEB ASSY,BAGGAGE COMPARTMENT.	1	1

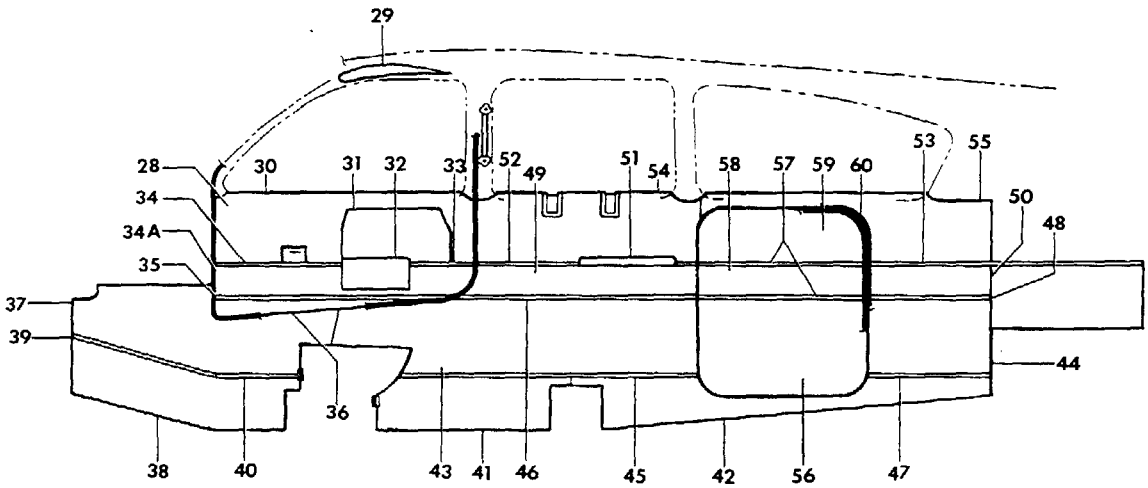

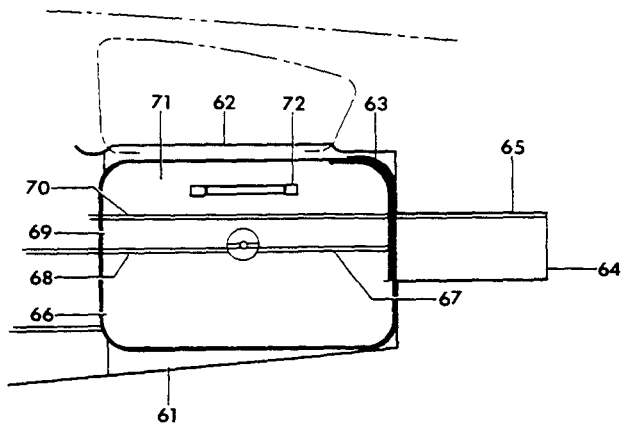

55-311-23

FIGURE 22-07.CABIN UPHOLSTERY
/SHEET 2 OF 2 SHEETS/

SUB-SECT UNIT & ITEM NO.		PART NO.	DESCRIPTION 1 2 3 4 5 6 7	UNITS PER ASSY	USABLE ON CODE
22-07 - 28	R	96-530007-163	WINDLACE ASSY	1	1
		50-534033-179	RUBBER STRIP	1	1
- 29		96-530007-159	PANEL ASSY,FWD CABIN DOOR	1	1
- 30		96-530007-153	PANEL ASSY,FWD CABIN DOOR	1	1
- 31		96-530007-258	PANEL ASSY,RECESS/COPILOT/CABIN DOOR	1	1
- 32		96-534096-1	ARMREST ASSY,COPILOT/CABIN DOOR	1	1
- 33		96-530007-173	TRIM/CABIN DOOR/	1	1
- 34		96-530007-171	TRIM/CABIN DOOR/	1	1
- 34A		96-530007-151	PANEL ASSY,CONSOLE/CABIN DOOR/	1	1
- 35		96-530007-169	TRIM/CABIN DOOR/	1	1
- 36		96-530007-139	PANEL ASSY,CABIN DOOR	1	1
- 37		96-530007-143	PANEL ASSY,RH	1	1
- 38		96-530007-147	PANEL ASSY,RH	1	1
- 39		96-530007-167	TRIM,RH	1	1
- 40		96-530007-165	TRIM,RH	1	1
- 41		96-530007-133	PANEL ASSY,RH	1	1
- 42	R	33-530007-143	PANEL ASSY,RH/WITH STD BAGGAGE DOOR/	1	1
- 43		96-530007-123	PANEL ASSY,RH	1	1
- 44		96-530007-225	PANEL ASSY,RH/WITH STD BAGGAGE DOOR/	1	1
- 45		96-530007-87	TRIM,RH	1	1
- 46		96-530007-85	TRIM,RH	1	1
- 47		96-530007-77	TRIM,RH	1	1
- 48		96-530007-75	TRIM,RH	1	1
- 49		96-534121	PANEL ASSY,RH CONSOLE	1	1
- 50		96-530007-91	PANEL ASSY,RH CONSOLE	1	1
- 51		96-534122-2	ARMREST ASSY,RH PASSENGER	1	1
- 52		96-530007-293	TRIM,RH	1	1
- 53		96-530007-79	TRIM,RH	1	1
- 54		96-530007-107	PANEL ASSY,RH	1	1
- 55		96-530007-93	PANEL ASSY,RH	1	1
- 56		96-530007-119	PANEL ASSY,RH/STD BAGGAGE DOOR/	1	1
- 57		96-530007-81	TRIM,RH/STD BAGGAGE DOOR/	2	1
- 58		96-530007-117	PANEL ASSY,RH/STD BAGGAGE DOOR/	1	1
- 59		96-530007-101	PANEL ASSY,RH/STD BAGGAGE DOOR/	1	1
- 60		96-530007-99	WINDLACE/STD BAGGAGE DOOR/	1	1
- 61		33-530007-279	PANEL ASSY,RH/WITH OPT UTILITY BAGGAGE DOOR/	1	1
- 62		96-530007-193	PANEL ASSY,RH/WITH OPT UTILITY BAGGAGE DOOR/	1	1
- 63		96-530007-191	WINDLACE,RH/OPT UTILITY BAGGAGE DOOR/	1	1
- 64		96-530007-201	PANEL ASSY,RH/WITH OPT UTILITY BAGGAGE DOOR/	1	1
- 65		96-530007-213	TRIM,RH/WITH OPT UTILITY BAGGAGE DOOR/	1	1
- 66		96-530007-195	PANEL ASSY,UTILITY BAGGAGE DOOR	1	1
- 67		96-530007-211	TRIM,UTILITY BAGGAGE DOOR	1	1
- 68		96-530007-209	TRIM,UTILITY BAGGAGE DOOR	1	1
- 69		96-530007-199	PANEL ASSY,UTILITY BAGGAGE DOOR CONSOLE	1	1
- 70		96-530007-207	TRIM,UTILITY BAGGAGE DOOR	1	1
- 71		96-530007-185	PANEL ASSY,UTILITY BAGGAGE DOOR	1	1
- 72		1775-354-324-174	HANDLE ASSY,UTILITY BAGGAGE DOOR	1	1

CODES OF EFFECTIVITY

1 TE-768 THRU TE-942
EXCEPT TE-938

25-23-01
CABIN FURNISHING/MISCELLANEOUS/

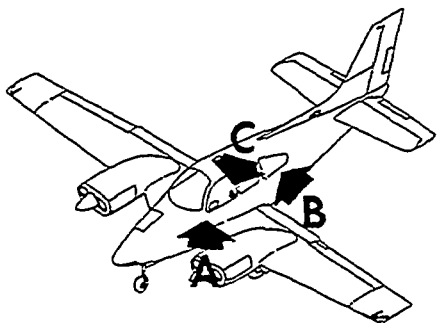

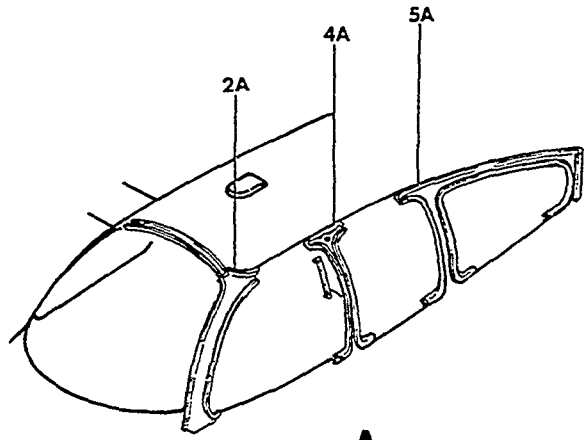

VIEW A

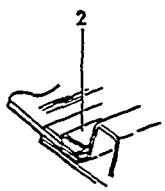

VIEW D

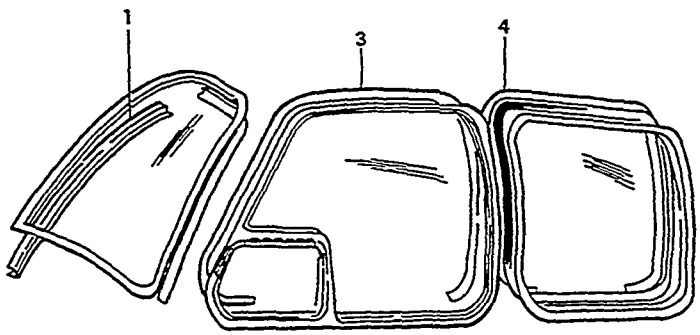

VIEW A

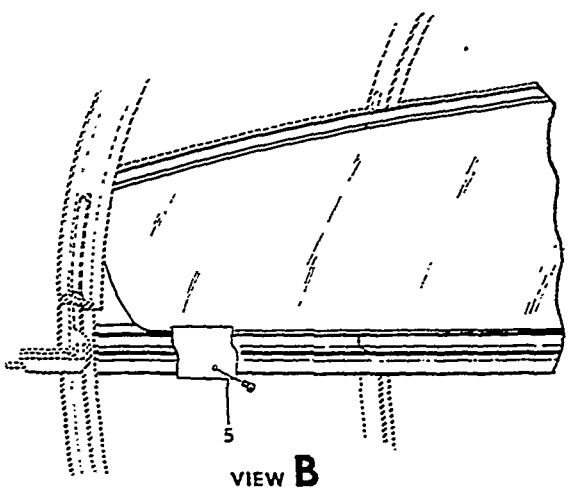

VIEW B

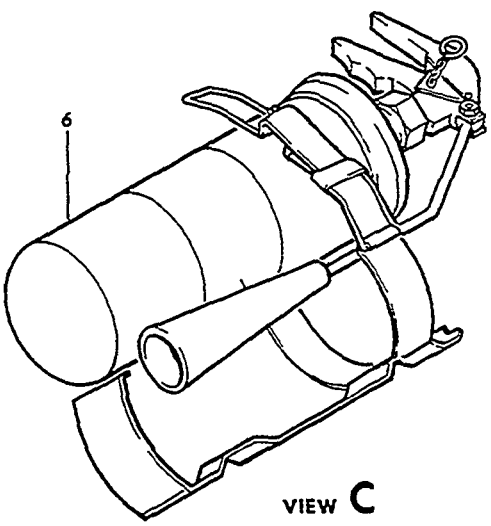

VIEW C

55-324-31

FIGURE 23-01.CABIN FURNISHING/MISCELLANEOUS/
/SHEET 1 OF 10 SHEETS/

ATA CODE & INDEX NO.	PART NO.	DESCRIPTION 1 2 3 4 5 6 7	UNITS PER ASSY	USABLE ON CODE
23-01 - 1	35-410291-46	MOULDING,WINDSHIELD/TWO PIECE WINDSHIELD/ . . .	1	1
	35-410291-170	MOULDING,WINDSHIELD/TWO PIECE WINDSHIELD/ . . .	1	1
		/ATTACHING PARTS/		
	PK84XA4-4	SCREW	AR	
		——*——		
- 2	35-410291-80	MOULDING,WINDSHIELD LH.	1	1
	35-410474-49	MOULDING,WINDSHIELD LH.	1	2
	35-410291-81	MOULDING,WINDSHIELD RH.	1	1
	35-410474-50	MOULDING,WINDSHIELD RH.	1	2
		/ATTACHING PARTS/		
	35-410315	CLIP.	15	
	PK84XA4-4	SCREW	15	
		——*——		
- 2A	58-530086-3	MOULDING,CANOPY POST LH FWD	1	12
	58-530085-3	MOULDING,CANOPY POST RH FWD	1	12
- 3	35-410291-175	MOULDING,FWD WINDOW LH/SUPERSEDES 35-410291-76/	1	3
		/ATTACHING PARTS/		
	35-410315	CLIP.	16	
	PK84XA4-4	SCREW	16	
		——*——		
- 4	35-410291-72	MOULDING,CENTER WINDOW LH/OPENABLE/	1	23
	35-410291-73	MOULDING,CENTER WINDOW RH/OPENABLE/	1	23
- 4A	58-530087-3	MOULDING,ASSY,CANOPY POST LH CENTER	1	12
	58-530088-3	MOULDING ASSY,CANOPY POST RH CENTER	1	12
- 5	95-420015-93	MOULDING,AFT WINDOW LH/THIN GLASS/.	1	23
	96-430010-71	MOULDING,AFT WINDOW LH/THICK GLASS/	1	23
- 5A	35-534456-3	MOULDING ASSY,AFT WINDOW LH	1	12
	95-420015-94	MOULDING,AFT WINDOW RH/THIN GLASS/.	1	23
	96-430010-72	MOULDING,AFT WINDOW RH/THICK GLASS/	1	23
	35-534456-4	MOULDING ASSY,AFT WINDOW RH	1	12
		/ATTACHING PARTS/		
	NAS384-6-8P	SCREW	AR	
	NAS384-6-12P	SCREW	AR	
	NAS391-6P	WASHER.	12	
	100696AZF008	SPACER.	AR	
	100696DZF008	SPACER.	AR	
		——*——		
	A2	EXTINGUISHER,FIRE/WITH BRACKET/	1	3
		/ATTACHING PARTS/		
	AN507-832	SCREW	6	
	AN960-8	WASHER.	6	
	AN366F832	NUTPLATE.	6	
		——*——		
- 6	FR2 1/2	EXTINGUISHER,FIRE/FREON TYPE/	1	6
		/ATTACHING PARTS/		
	AN525-10	SCREW	4	
	AN960-10	WASHER.	4	
	AN365-1032	NUT	4	
		——*——		

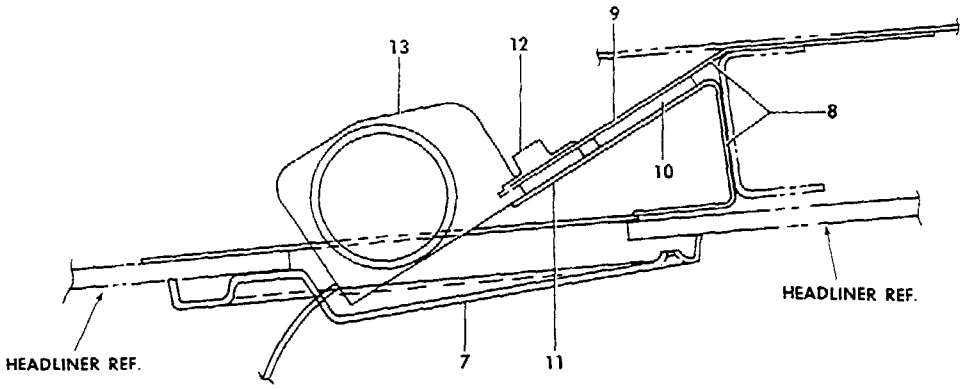

VIEW **A**

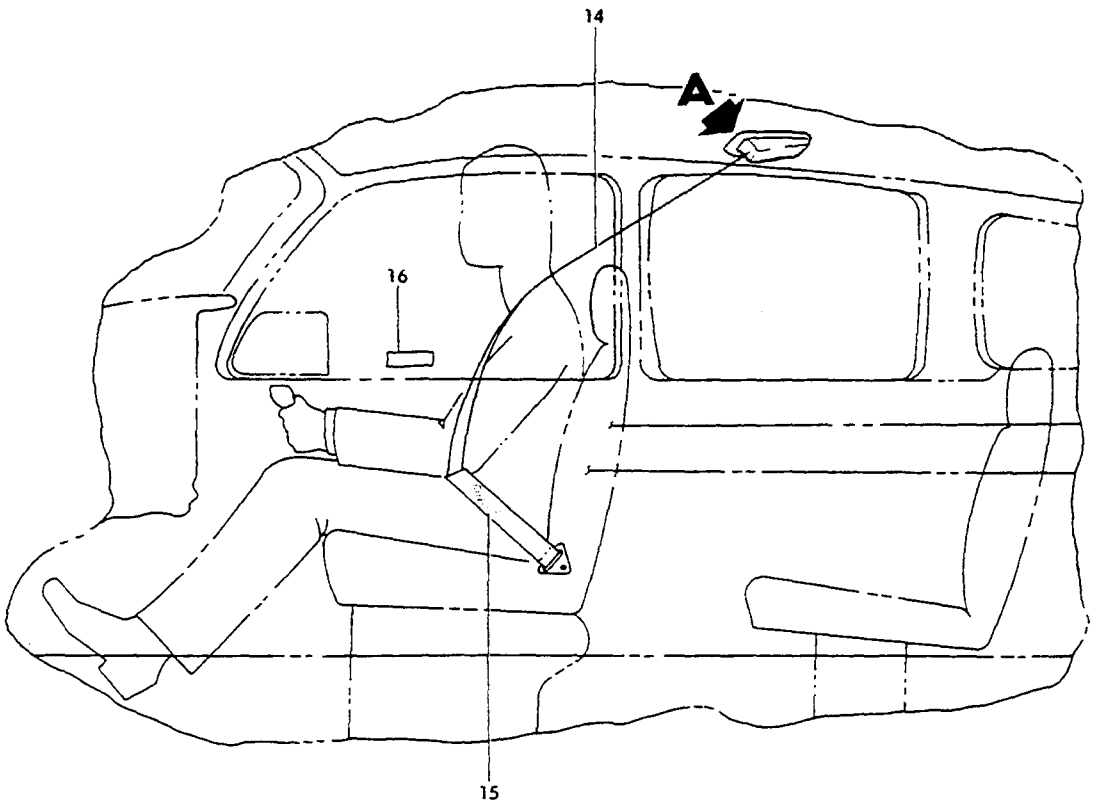

55-324-32

FIGURE 23-01.CABIN FURNISHING/MISCELLANEOUS/
/SHEET 2 OF 10 SHEETS/

ATA CODE & INDEX NO.	PART NO.	DESCRIPTION 1 2 3 4 5 6 7	UNITS PER ASSY	USABLE ON CODE
23-01	58-530138-1	SHOULDER HARNESS & LAP BELT INSTL	NP	7
- 7	58-530140-1	. ESCUTCHEON,INERTIA REEL	2	7
		/ATTACHING PARTS/		
	NAS384-8-10P	. SCREW	2	
	NAS384-8-16P	. SCREW	2	
		——*——		
	58-530139-1	. BRACKET INSTL,INERTIA REEL	NP	7
- 8	58-530139-3	. . BRACKET ASSY,LH	1	7
	58-530139-4	. . BRACKET ASSY,RH	1	7
		/ATTACHING PARTS/		
	AN3-3A/M/	. . BOLT	1	
	AN960-10	. . WASHER	1	
	MS21042-3	. . NUT	1	
		——*——		
- 9	58-530139-5	. . . BRACKET,LH	1	7
	58-530139-6	. . . BRACKET,RH	1	7
- 10	58-530139-11	. . . SPACER	1	7
- 11	58-530139-9	. . . ANGLE	1	7
- 12	MS21051-4K	. . . NUTPLATE	1	7
	58-530139-7	. . CLIP	2	7
- 13	0107121-9	. REEL,INERTIA	1	7
		/ATTACHING PARTS/		
	AN4-5A/M/	. BOLT	1	
	102933S5ZM0135	. SPACER	1	
		——*——		
- 14	58-530081-19	. HARNESS ASSY,SHOULDER	1	7
	58-530081-17	. . BELT	1	7
	CS647	. . LINK,HARNESS LH	1	7
	CS647	. . LINK,HARNESS RH	1	7
	331081-1	. . PLACARD/SUPERSEDES 115184-1/	1	7
- 15	58-530081-29	. BELT ASSY,LAP	1	7
	58-530081-27	. . BELT	1	7
	CS500083B	. . BUCKLE	1	7
	D611A	. . TIP	1	7
	M2005M2	. . FITTING,END	1	7
	331081-1	. . PLACARD/SUPERSEDES 115184-1/	1	7
	58-530081-53	. BELT ASSY,LAP	1	7
	58-530081-49	. . BELT	1	7
	500535-401	. . CONNECTOR ASSY	1	7
	D611A	. . TIP	1	7
	M2005M2	. . FITTING,END	1	7
	331081-1	. . PLACARD/SUPERSEDES 115184-1/	1	7
- 16	58-530141-5	. DECAL,SHOULDER HARNESS & LAP BELT INSTRUCTION	1	7

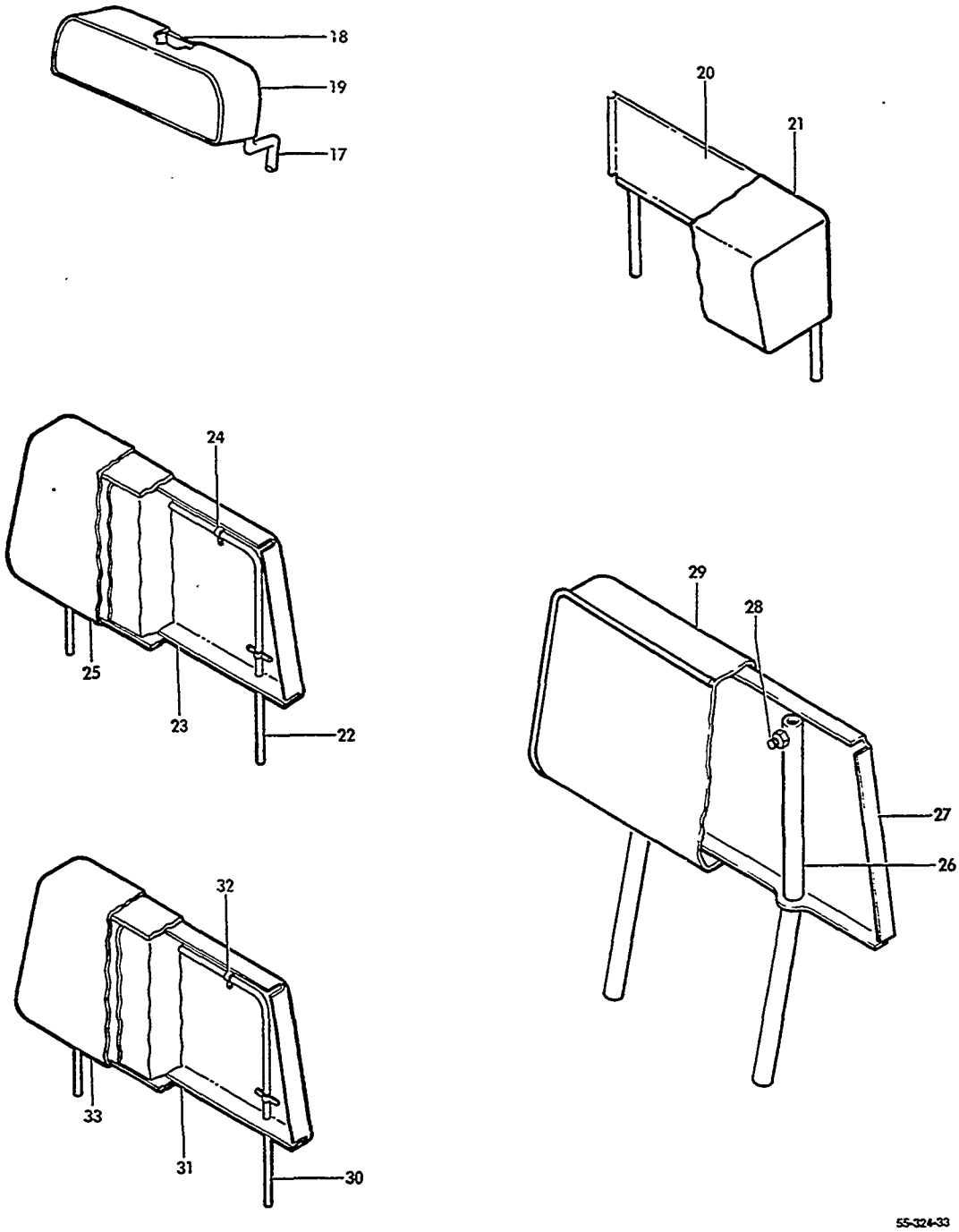

FIGURE 23-01.CABIN FURNISHING/MISCELLANEOUS/
/SHEET 3 OF 10 SHEETS/

ATA CODE & INDEX NO.	PART NO.	DESCRIPTION 1 2 3 4 5 6 7	UNITS PER ASSY	USABLE ON CODE
23-01	95-534028-601	HEADREST ASSY/FRONT & REAR SEATS/	1	8
- 17	95-534028-1	. TUBE,HEADREST	1	8
- 18	95-534028-7	. PLATE ASSY,HEADREST LH.	1	8
	95-534028-8	. PLATE ASSY,HEADREST RH.	1	8
		/ATTACHING PARTS/		
	NAS384-6-8P	. SCREW	3	
	NAS391-6P	. WASHER.	3	
		----*----		
- 19	95-534028-13	. PAD,HEADREST.	1	8
	AN535-2-2	. SCREW	2	8
	AN227-6	. BUTTON.	7	8
	AN227-7B	. SOCKET.	7	8
	AN227-8B	. STUD.	7	8
	AN227-9B	. EYELET.	7	8
	96-534020-1	HEADREST ASSY/FRONT & REAR SEATS/	1	9
- 20	96-534020-5	. HEADREST ASSY	1	9
	96-534020-3	. . PAD	1	9
	96-534020-11	. . TUBE.	1	9
	AN750-6	. . CLIP.	1	9
- 21	96-534026	. CUSHION,HEADREST.	1	9
	35-534452-1	HEADREST ASSY/PILOT & COPILOT SEAT/	1	10
	60-530060-1	HEADREST ASSY/PILOT & COPILOT SEAT/	1	11
	35-534452-3	. FRAME ASSY,HEADREST	1	10
	60-530060-3	. FRAME ASSY,HEADREST	1	11
- 22	35-534452-7	. . SUPPORT	1	10
	60-530060-7	. . SUPPORT	1	11
- 23	35-534452-5	. . FRAME	1	10
	60-530060-5	. . FRAME	1	11
		/ATTACHING PARTS/		
- 24	750-6	. . CLAMP,SUPPORT	4	
	AN515-8R5	. . SCREW	8	
	MS20364-832	. . NUT	8	
		----*----		
- 25	35-534452-9	. COVER ASSY.	1	10
	60-530060-9	. COVER ASSY.	1	11
	58-530120-1	HEADREST ASSY/PILOT & COPILOT SEAT/	1	12
	58-530120-5	. FRAME ASSY.	1	12
- 26	58-530120-11	. . SUPPORT	2	12
- 27	58-530120-13	. . PAN	1	12
		/ATTACHING PARTS/		
- 28	MS27039-0810	. . SCREW	2	
	105090D040-2F	. . WASHER.	2	
	H10-08	. . NUT	2	
		----*----		
- 29	58-530120-15	. . COVER ASSY.	1	12
	60-530060-1	HEADREST ASSY/PASSENGER SEATS/.	1	13
	35-534452-1	HEADREST ASSY/PASSENGER SEATS/.	1	10
	60-530060-3	. FRAME ASSY,HEADREST	1	13
	35-534452-3	. FRAME ASSY,HEADREST	1	10
- 30	60-530060-7	. . SUPPORT	1	13
	35-534452-7	. . SUPPORT	1	10
- 31	60-530060-5	. . FRAME	1	13
	35-534452-5	. . FRAME	1	10
		/ATTACHING PARTS/		
- 32	750-6	. . CLAMP,SUPPORT	4	
	AN515-8R5	. . SCREW	8	
	MS20364-832	. . NUT	8	
		----*----		
- 33	60-530060-9	. . COVER ASSY.	1	13
	35-534452-9	. . COVER ASSY.	1	10

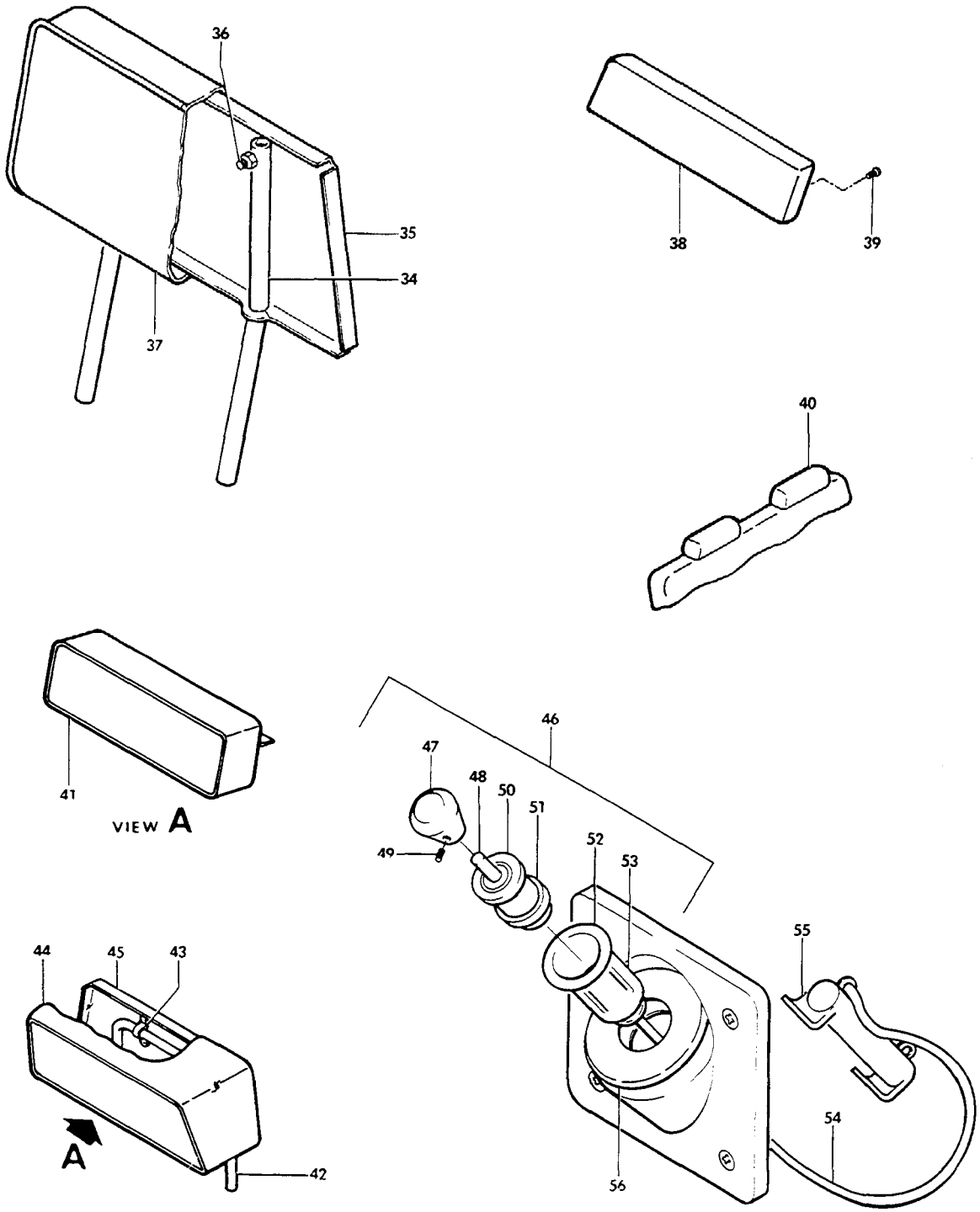

FIGURE 23-01.CABIN FURNISHING/MISCELLANEOUS/
/SHEET 4 OF 10 SHEETS/

ATA CODE & INDEX NO.	PART NO.	DESCRIPTION 1 2 3 4 5 6 7	UNITS PER ASSY	USABLE ON CODE
23-01	58-530120-1	HEADREST ASSY/PASSENGER SEATS/.	1	12
	58-530120-5	. FRAME ASSY.	1	12
- 34	58-530120-11	. . SUPPORT	2	12
- 35	58-530120-13	. . PAN	1	12
		/ATTACHING PARTS/		
- 36	MS27039-0810	. . SCREW	2	
	105090D040-2F	. . WASHER.	2	
	H10-08	. . NUT	2	
		——*——		
- 37	58-530120-15	. . COVER ASSY.	1	12
- 38	96-530001-615	HEADREST ASSY/FIFTH SEAT/	1	14
		/ATTACHING PARTS/		
- 39	PK76XZ6-6	SCREW	2	
	A1784-6Z1	NUT	2	
		——*——		
- 40	96-534039-3	HEADREST ASSY/FOLDING FIFTH & SIXTH SEAT/ . . .	2	15
		/ATTACHING PARTS/		
	NAS384-6-6	SCREW	3	
	NAS391-6	WASHER.	3	
		——*——		
- 41	96-534039-3	HEADREST ASSY,SPECIAL 5 & 6 SEAT/USED WITHOUT .	1	16
		EXTENDED BAGGAGE COMPARTMENT/		
		/ATTACHING PARTS/		
	NAS384-6-6	SCREW	3	
	NAS391-6	WASHER.	3	
		——*——		
	96-534051-39	HEADREST ASSY,SPECIAL 5 & 6 SEAT/USED WITH. . .	1	17
		EXTENDED BAGGAGE COMPARTMENT/		
- 42	96-534051-37	. TUBE,HEADREST SUPPORT	1	17
- 43	AN750-6	. CLIP.	4	17
- 44	96-534051-35	. CUSHION	1	17
- 45	96-534020-3	. PAN	1	17
	35-364160	LIGHTER ASSY,CIGARETTE.	1	3
- 46	35-364160-3	. ELEMENT & KNOB ASSY	1	3
- 47	35-380055-1	. . KNOB.	1	3
- 48	35-364061	. . STUD.	1	3
- 49	AN565D8-3	. . SCREW,SET	1	3
- 50	35-364160-1	. . WASHER.	1	3
- 51	LHA30882	. . ELEMENT,HEAT.	1	3
- 52	LBA27492	. SOCKET,LIGHTER.	1	3
- 53	LU27054	. SHELL,RETAINING	1	3
- 54	LWA29455	. CORD ASSY,LIGHTER/SUPERSEDES LWA2919/	1	3
- 55	0560B	RESISTOR/2 OHM 50 WATT/	1	3
		/ATTACHING PARTS/		
	AN515-8R8	SCREW	2	
	AN960-8	WASHER.	2	
	MS20365-832	NUT	2	
		——*——		
- 56	96-364013-1	PLATE,LIGHTER TRIM.	1	3
		/ATTACHING PARTS/		
	NAS384-6-8	SCREW	2	
	NAS395-6	WASHER.	2	
		——*——		

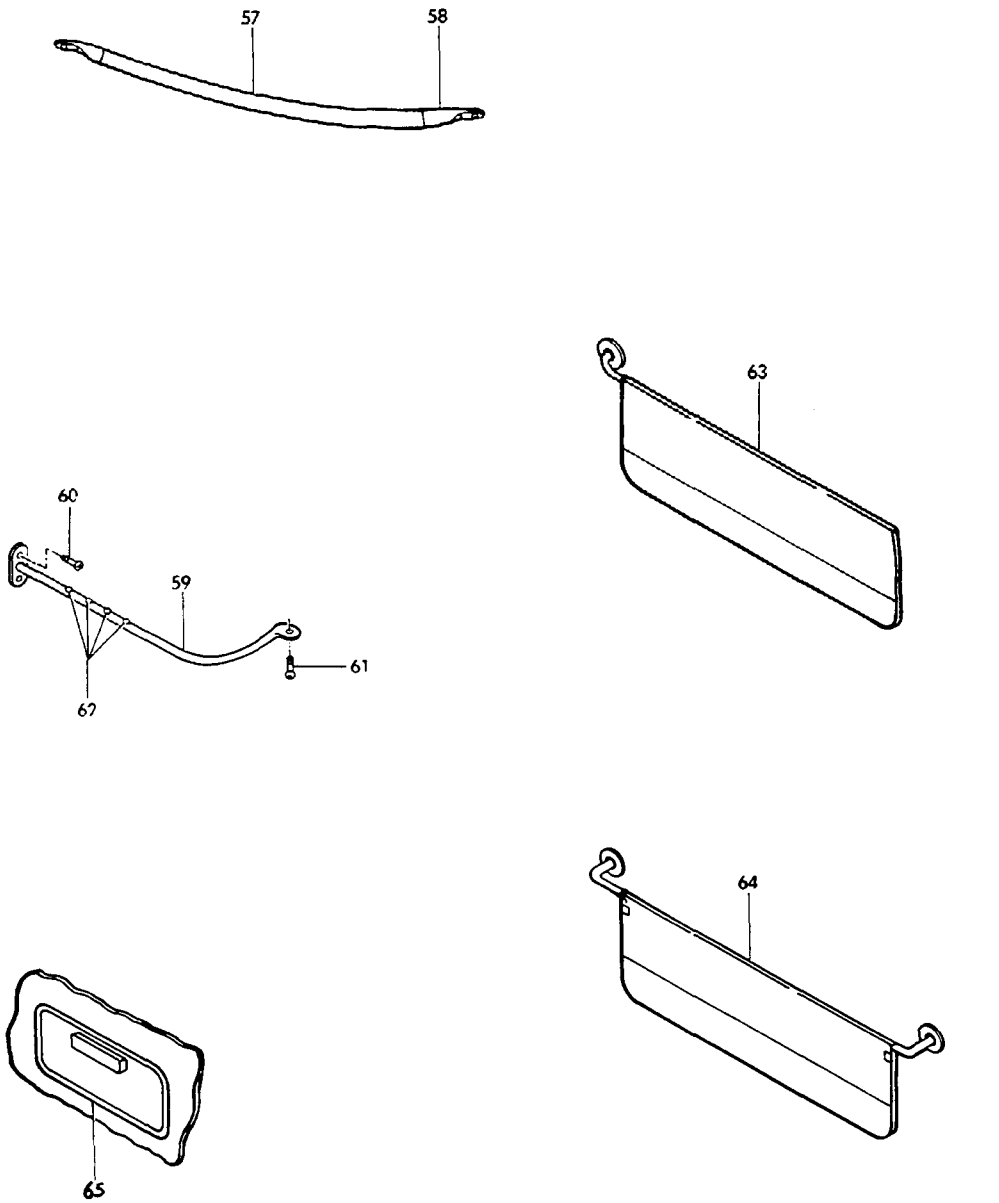

FIGURE 23-01.CABIN FURNISHING/MISCELLANEOUS/
/SHEET 5 OF 10 SHEETS/

ATA CODE & INDEX NO.	PART NO.	DESCRIPTION 1 2 3 4 5 6 7	UNITS PER ASSY	USABLE ON CODE
23-01	35-534399	HANGER INSTALLATION,COAT.	NP	19
	35-534399	HANGER INSTALLATION,COAT/STANDARD/.	NP	20
	95-534042	STRAP INSTL,COAT HANGER/USED WITH 5 & 6 SEAT/ .	NP	20
- 57	35-534399-1	. TUBE.	1	21
	1440-14	. STRAP	1	22
- 58	95-534042-3	. COVER,END	2	22
		/ATTACHING PARTS/		
	NAS387-8R	. SCREW	2	23
	NAS391B8P	. WASHER/SUPERSEDES NAS391-8P/.	2	23
	35-534399-3	. SPACER.	2	23
	AN366F832	. NUTPLATE.	2	23
	NAS387-1032-20P	. SCREW	2	12
	NAS391B8P	. WASHER.	2	12
	102933D4-0312ZM	. SPACER.	2	12
	MS21047-3	. NUT	2	12
	4840719	HOOK,PILOTS COAT/SUPERSEDES 4601476/.	1	12
		/ATTACHING PARTS/		
	NAS384-8-10P	SCREW	1	
	96-534092	HANGER INSTALLATION,GARMENT BAG	NP	6
- 59	96-534092-1	. HANGER ASSY	1	6
		/ATTACHING PARTS/		
- 60	MS27039-0806	. SCREW	2	
- 61	MS27039-0808	. SCREW	1	
	NAS680A08	. NUTPLATE.	3	
- 62	AN535-6-6	. . SCREW,DRIVE	4	6
- 63	33-530003-49	SUN VISOR ASSY,FRONT.	1	8
	35-534406-69	SUN VISOR ASSY,FRONT.	1	24
	35-534406-85	SUN VISOR ASSY,FRONT.	1	25
	58-530128-1	SUN VISOR ASSY,FRONT.	1	26
	35-534079-604	SUN VISOR ASSY,FRONT.	1	27
- 64	35-534308-43	SUN VISOR ASSY,REAR	1	8
	35-534406-71	SUN VISOR ASSY,REAR	1	28
	35-534090-26	SUN VISOR ASSY,REAR	1	20
- 65	35-534242	ASH TRAY.	1	8
	2A20580	ASH TRAY.	1	29
	3A17680	ASH TRAY.	1	26
		/ATTACHING PARTS/		
	NAS384-6P	SCREW	2	
	AN970-3	WASHER.	2	
	A6310-6Z1	NUT	2	
	33-534042-1	ASH TRAY.	1	11
		/ATTACHING PARTS/		
	PK74XZ6-8	SCREW	2	
	A6500-6Z1	NUT	2	
	58-530076-3	ASH TRAY,CABIN.	4	6
	3A17680	ASH TRAY,PILOT.	1	6
		/ATTACHING PARTS/		
	PK76XZ6-10	SCREW	2	

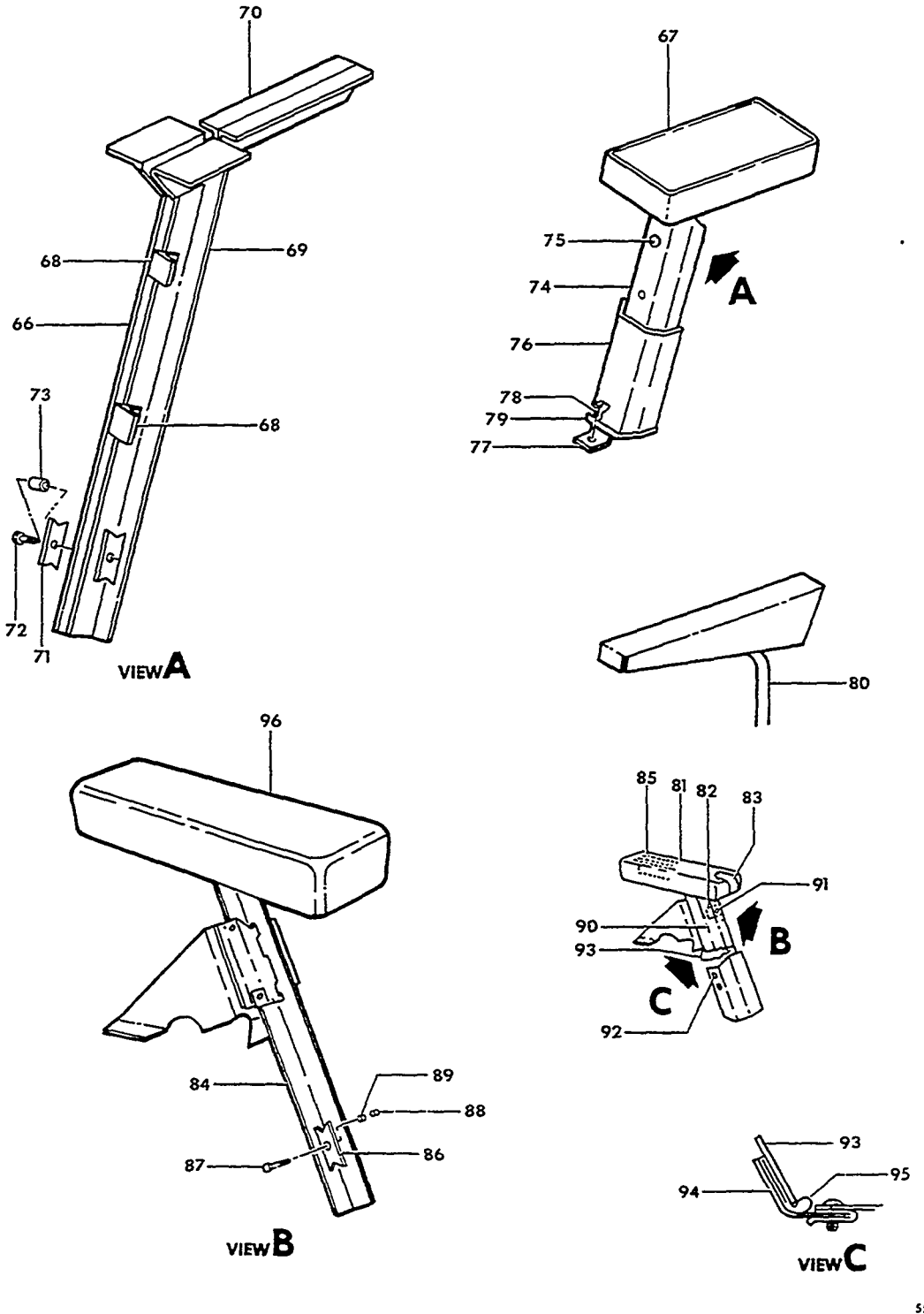

FIGURE 23-01.CABIN FURNISHING/MISCELLANEOUS/
/SHEET 6 OF 10 SHEETS/

SUB-SECT UNIT & ITEM NO.	PART NO.	DESCRIPTION 1 2 3 4 5 6 7	UNITS PER ASSY	USABLE ON CODE
23-01	35-534305-605	ARMREST ASSY,FRONT SEAT CENTER.	1	8
- 66	35-534372-1	. ARMREST ASSY,FRONT SEAT CENTER.	1	8
- 67	35-534372-7	. ARMREST	1	8
- 68	35-534372-33	. CLIP.	2	8
- 69	35-534372-65	. SUPPORT	1	8
- 70	35-534372-67	. BRACKET	1	8
- 71	50-534073-1	CAM	1	8
		/ATTACHING PARTS/		
- 72	AN525-832-11	SCREW	1	
- 73	105739X-XP0221	SPACER.	1	
	105739X-XR0150	SPACER.	1	
	AN960-10L	WASHER.	1	
	MS20365-832	NUT/SUPERSEDES AN365-832/	1	
		----*----		
- 74	35-534372-37	COVER	1	8
		/ATTACHING PARTS/		
- 75	AN530-8R6	SCREW	2	
		----*----		
	35-534372-47	COVER ASSY,FRONT SEAT CENTER ARMREST.	1	8
		/ATTACHING PARTS/		
	AN530-8R6	SCREW	4	
		----*----		
- 76	35-534372-39	. COVER,ARMREST	1	8
- 77	35-534372-45	. CLIP.	1	8
		/ATTACHING PARTS/		
- 78	PK76XZ6-4	. SCREW	1	
	A1784-6Z3	. NUT	1	
		----*----		
- 79	35-534372-43	. WELT ASSY,ARMREST	1	8
	R 96-534017-33	BRAZE ASSY,RH PASSENGER SEAT/LH ARMREST/.	1	27
	R 96-534017-34	BRAZE ASSY,LH PASSENGER SEAT/LH ARMREST/.	1	27
	96-530001-621	ARMREST ASSY,REAR SEAT LH	1	8
- 80	96-530001-622	ARMREST ASSY,REAR SEAT RH	2	8
	96-530002-635	ARMREST ASSY,FRONT SEAT CENTER.	1	30
	96-530002-652	ARMREST ASSY,FRONT SEAT CENTER.	1	31
	35-534372-75	. ARMREST ASSY,FRONT SEAT CENTER.	1	30
	35-534372-89	. ARMREST ASSY,FRONT SEAT CENTER.	1	31
- 81	35-534372-69	. . ARMREST	1	30
	35-534372-83	. . ARMREST	1	31
- 82	35-534372-33	. . CLIP.	2	9
- 83	35-534372-71	. . HOOK.	1	9
- 84	35-534372-65	. . SUPPORT	1	9
- 85	35-534372-67	. . BRACKET	1	9
	35-534372-93	. . STOP.	1	31
- 86	50-534073-1	CAM	1	9
		/ATTACHING PARTS/		
- 87	AN525-832-11	SCREW	1	
- 88	105739X-XP0221	SPACER.	1	
- 89	105739X-XR0150	SPACER.	1	
	AN960-10L	WASHER.	1	
	MS20365-832	NUT	1	
		----*----		
- 90	35-534372-37	COVER	1	9
		/ATTACHING PARTS/		
- 91	AN530-8R6	SCREW	2	
		----*----		
	35-534372-47	COVER ASSY,FRONT SEAT CENTER ARMREST.	1	9
		/ATTACHING PARTS/		
- 92	AN530-8R6	SCREW	4	
		----*----		
- 93	35-534372-39	. COVER,ARMREST	1	9
- 94	35-534372-45	. CLIP.	1	9
		/ATTACHING PARTS/		
	PK76XZ6-4	. SCREW	1	
	A1784-6Z3	. NUT	1	
		----*----		
- 95	35-534372-43	. WELT ASSY,ARMREST	1	9
- 96	96-530002-665	UPHOLSTERY,ARMREST.	1	9

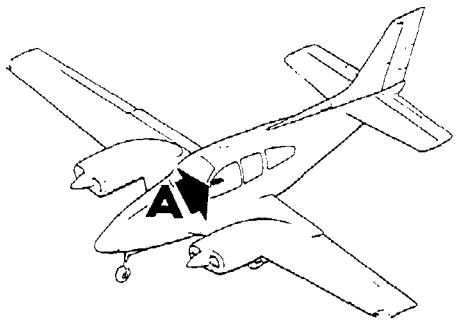

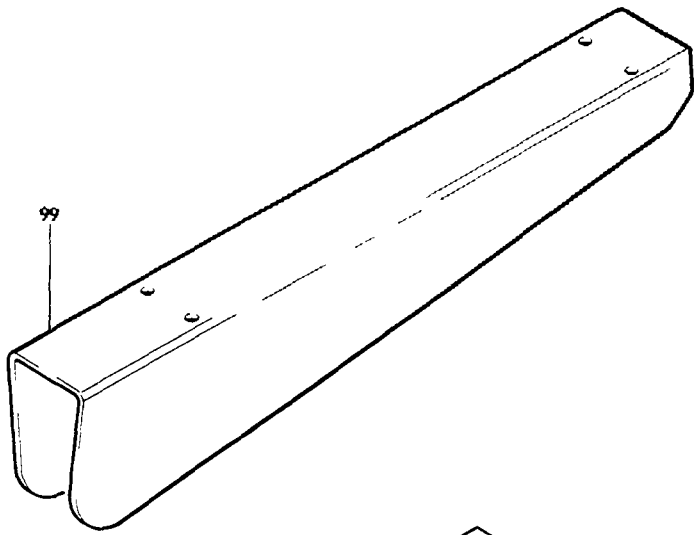

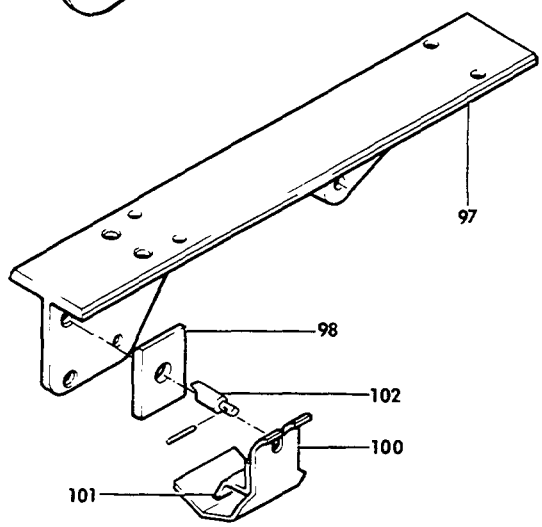

VIEW **A**

55-324-37

FIGURE 23-01.CABIN FURNISHING/MISCELLANEOUS/
/SHEET 7 OF 10 SHEETS/

SUB-SECT UNIT & ITEM NO.	PART NO.	DESCRIPTION 1 2 3 4 5 6 7	UNITS PER ASSY	USABLE ON CODE
23-01	60-530139-1	ARMREST INSTL,LH STOWABLE/PILOT & COPILOT/. . .	NP	32
	60-530139-2	ARMREST INSTL,RH STOWABLE/PILOT & COPILOT/. . .	NP	32
	60-530139-117	ARMREST INSTL,STOWABLE/PILOTS CHAIR/.	NP	33
	60-530139-3	. ARMREST ASSY,UPHOLSTERED.	1	32
	60-530139-4	. ARMREST ASSY,UPHOLSTERED.	1	32
	60-530139-121	. ARMREST ASSY,UPHOLSTERED.	1	33
		/ATTACHING PARTS/		
	R AN24-27A	. BOLT.	2	18
	60-530139-65	. WASHER.	2	33
	50-534547-25	. WASHER.	2	32
	50-534547-25	. WASHER.	2	33
	60-530139-133	. SPACER.	2	33
	R 105739SYD1400	. BUSHING	2	18
	R 42ND8-048	. NUT,STOP.	2	18
		----*----		
	60-530139-5	. . FRAME ASSY,LH ARMREST	1	32
	60-530139-6	. . FRAME ASSY,RH ARMREST	1	32
	60-530139-123	. . FRAME ASSY,ARMREST.	1	33
	60-530139-7	. . . SUPPORT ASSY,LH	1	32
	60-530139-8	. . . SUPPORT ASSY,RH	1	32
	60-530139-125	. . . SUPPORT ASSY.	1	33
	60-530139-13	. . . . SUPPORT,LH.	1	32
	60-530139-14	. . . . SUPPORT,RH.	1	32
- 97	60-530139-131	. . . . SUPPORT	1	33
	60-530139-15	. . . . DOUBLER/LH & RH SUPPORT/.	1	32
- 98	60-530139-15	. . . . DOUBLER,SUPPORT	1	33
	60-530139-25	. . . . CLIP.	2	32
	60-530139-25	. . . . CLIP.	2	33
	60-530139-9	. . . PAN ASSY.	1	18
	60-530139-10	. . . PAN ASSY,RH	1	32
		/ATTACHING PARTS/		
	AN515-8R8	. . . SCREW	4	
	AN935-8L	. . . WASHER.	4	
	AN350-832	. . . NUT,WING.	4	
		----*----		
	60-530139-27	. . . . PAN,LH & RH	1	32
- 99	60-530139-27	. . . . PAN	1	33
	60-530139-33	. . . . CLIP,LH & RH.	2	32
	60-530139-33	. . . . CLIP.	2	33
	60-530139-11	. . . RELEASE ASSY,LH & RH ARMREST.	1	32
	60-530139-11	. . . RELEASE ASSY,ARMREST.	1	33
		/ATTACHING PARTS/		
	AN509-8R7	. . . SCREW	1	
	AN960-8	. . . WASHER.	1	
	MS20364-832	. . . NUT	1	
		----*----		
	60-530139-29	. . . . HANDLE.	1	32
-100	60-530139-29	. . . . HANDLE.	1	33
	60-530139-31	. . . . SPRING.	1	32
-101	60-530139-31	. . . . SPRING.	1	33
	50-534547-29	. . . BOLT,LH ARMREST LATCH	1	32
-102	50-534547-30	. . . BOLT,RH ARMREST LATCH	1	18
	NAS77A6-35	. . . BUSHING	1	32
	NAS77A6-35	. . . BUSHING	1	33
	MS171505	. . . PIN,LATCH BOLT.	1	32
	MS171505	. . . PIN,LATCH BOLT.	1	33

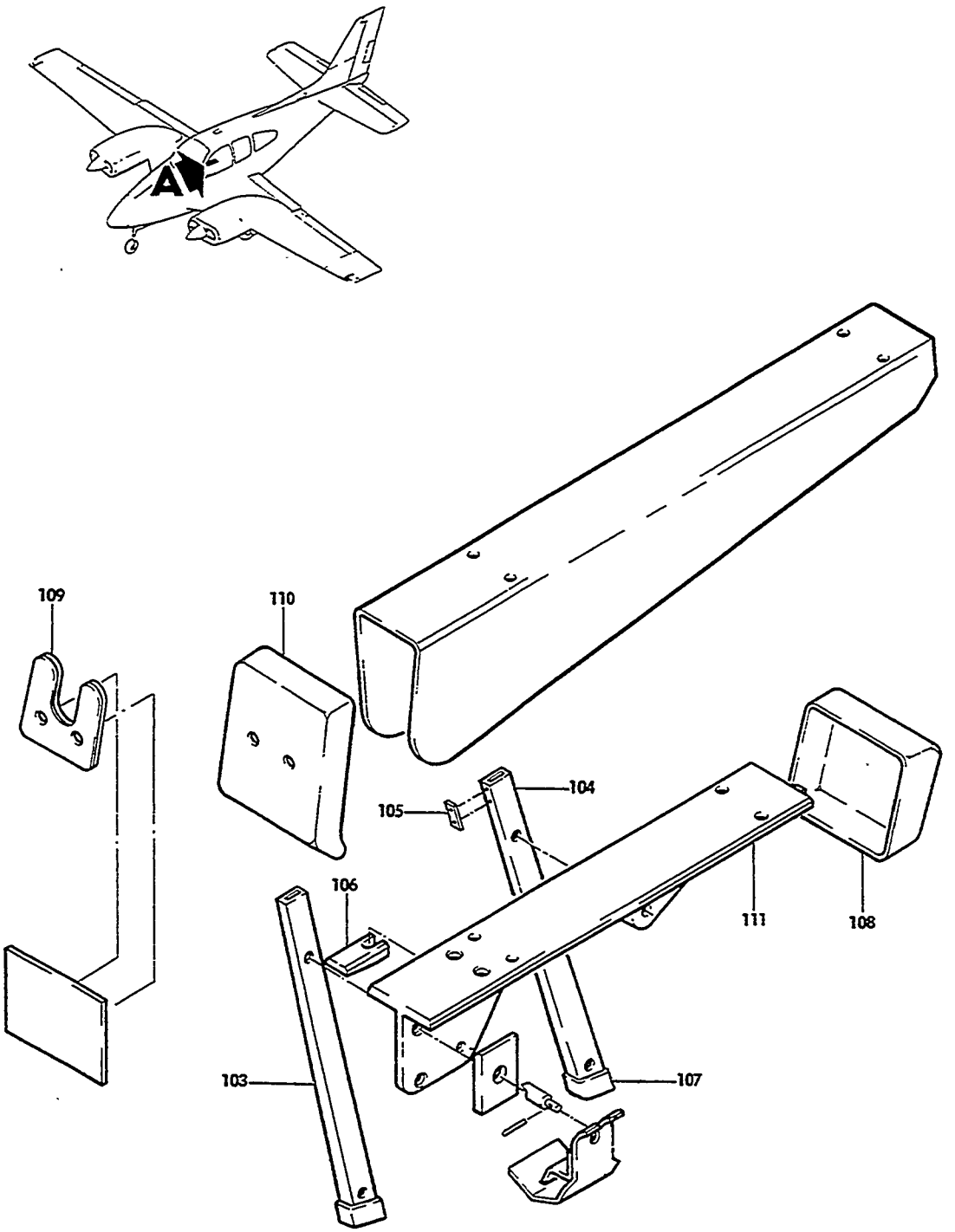

VIEW A

55-s24-38

FIGURE 23-01.CABIN FURNISHING/MISCELLANEOUS/
/SHEET 8 OF 10 SHEETS/

ATA CODE & INDEX NO.	PART NO.	DESCRIPTION 1 2 3 4 5 6 7	UNITS PER ASSY	USABLE ON CODE
23-01	60-530139-17	. . . ARM,FWD	1	35
	60-530139-127	. . . ARM,FWD	1	36
-103	60-530139-127	. . . ARM,FWD	1	33
	60-530139-19	. . . ARM,AFT	1	35
	60-530139-129	. . . ARM,AFT	1	36
-104	60-530139-129	. . . ARM,AFT	1	33
		/ATTACHING PARTS/		
	AN3-10/M/	. . . BOLT.	2	
	AN960-10L	. . . WASHER.	2	
	60-530139-23	. . . WASHER.	2	
	MS20364-1032	. . . NUT	2	
		----*----		
	60-530139-21	. . . STOP,AFT ARM.	1	32
-105	60-530139-21	. . . STOP,AFT ARM.	1	33
		/ATTACHING PARTS/		
	AN531-6R4	. . . SCREW	2	
		----*----		
	60-530139-37	. . . STOP,FWD ARM.	1	32
-106	60-530139-37	. . . STOP,FWD ARM.	1	33
		/ATTACHING PARTS/		
	AN509-8R12	. . . SCREW	1	
	AN960-8	. . . WASHER.	1	
	MS20364-832	. . . NUT	1	
		----*----		
	99-530073-14	. . COVER,ARM	2	6
	99-530073-15	. . COVER,ARM	2	36
-107	99-530073-15	. . COVER,ARM	2	37
	60-530139-35	. . CAP,AFT	1	32
-108	60-530139-35	. . CAP,AFT	1	33
		/ATTACHING PARTS/		
	NAS384-6P	. . SCREW	2	
	NAS390-6P	. . WASHER.	2	
		----*----		
	58-530075-1	. . HOOK ASSY,MIC/ARMREST/.	1	33
-109	58-530075-3	. . . PLATE	1	33
	58-530075-5	. . . SPACER.	1	33
-110	50-534527-5	. . . CAP,FWD	1	33
		/ATTACHING PARTS/		
	PK89XA6-6	. . . SCREW	2	
		----*----		
	60-530139-1	ARMREST INSTL,LH STOWABLE/PASSENGER SEATS/. . .	NP	32
	60-530139-1	ARMREST INSTL,RH STOWABLE/PASSENGER SEATS/. . .	NP	32
	60-530139-119	ARMREST INSTL,STOWABLE/LH CHAIR/.	NP	33
	60-530139-3	. ARMREST ASSY,UPHOLSTERED.	1	32
	60-530139-4	. ARMREST ASSY,UPHOLSTERED.	1	32
	60-530139-121	. ARMREST ASSY,UPHOLSTERED.	1	33
		/ATTACHING PARTS/		
	AN24-15A/M/	. BOLT.	2	32
	AN24-27A/M/	. BOLT.	2	33
	105739S-YD0700	. SPACER.	2	
	60-530139-133	. SPACER.	2	33
	50-534547-25	. WASHER.	2	32
	50-534547-65	. WASHER.	2	33
	42ND8-048	. NUT,STOP.	2	
		----*----		
	60-530139-5	. . FRAME ASSY,LH ARMREST	1	18
	60-530139-6	. . FRAME ASSY,RH ARMREST	1	18
	60-530139-7	. . . SUPPORT ASSY,LH	1	18
-111	60-530139-13	. . . . SUPPORT,LH.	1	18
	60-530139-14	. . . . SUPPORT,RH.	1	18

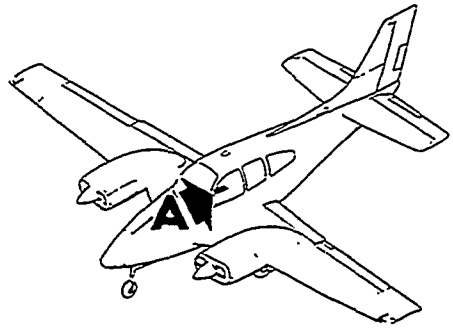

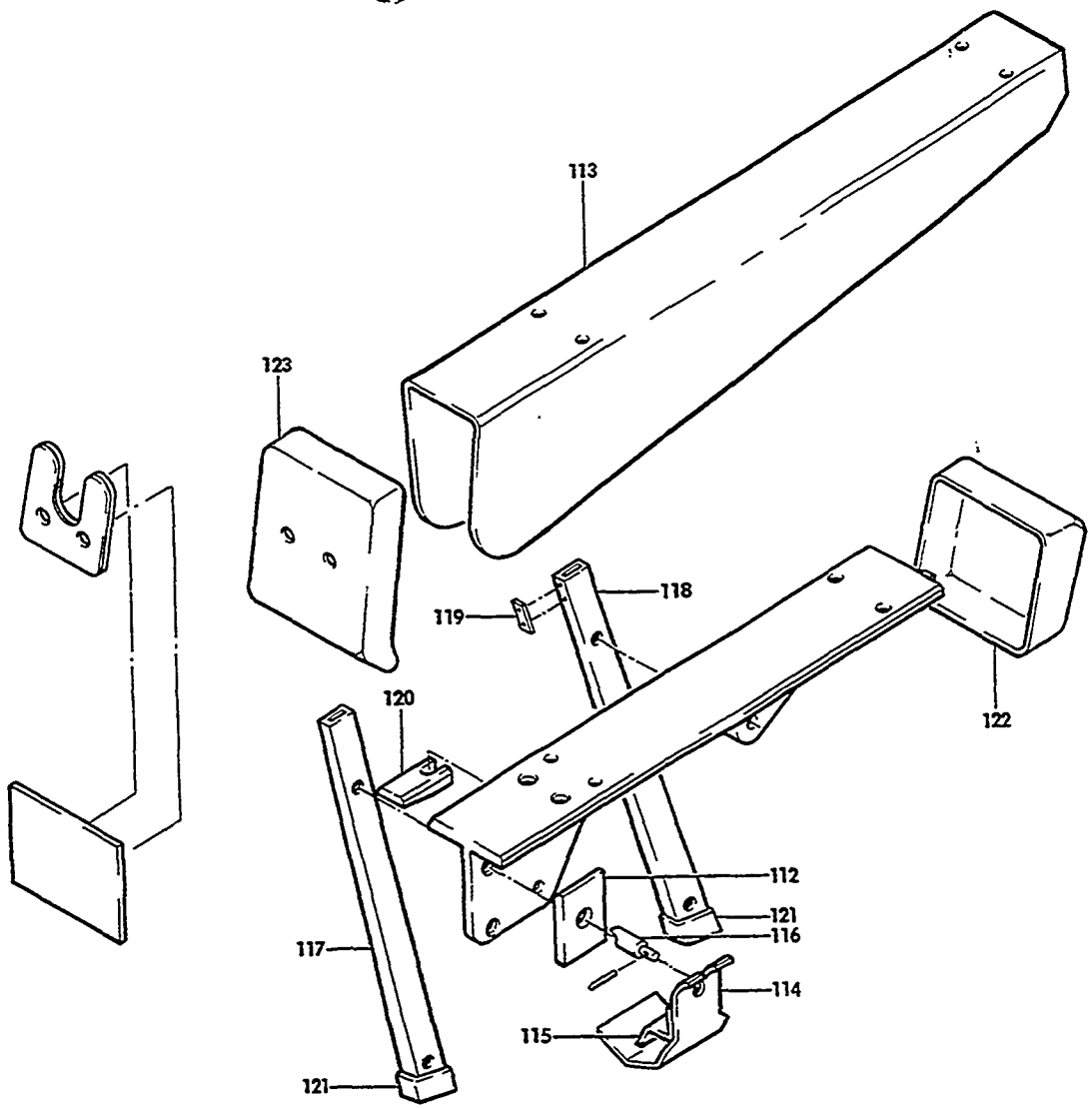

VIEW A

55-324-39

FIGURE 23-01.CABIN FURNISHING/MISCELLANEOUS/
/SHEET 9 OF 10 SHEETS/

ATA CODE & INDEX NO.	PART NO.	DESCRIPTION 1 2 3 4 5 6 7	UNITS PER ASSY	USABLE ON CODE
23-01	60-530139-15	. . . . DOUBLER,LH & RH SUPPORT	1	34
-112	60-530139-15	. . . . DOUBLER,LH SUPPORT.	1	33
	60-530139-25	. . . . CLIP.	2	34
	60-530139-25	. . . . CLIP.	2	33
	60-530139-9	. . . PAN ASSY,LH	1	18
	60-530139-10	. . . PAN ASSY,RH	1	34
		/ATTACHING PARTS/		
	AN515-8R8	. . . SCREW	4	
	AN935-8L	. . . WASHER.	4	
	AN350-832	. . . NUT,WING.	4	
		——*——		
-113	60-530139-27	. . . . PAN,LH & RH	1	32
	60-530139-27	. . . . PAN,LH.	1	33
	60-530139-33	. . . . CLIP,LH & RH.	2	32
	60-530139-33	. . . . CLIP.	2	33
	60-530139-11	. . . RELEASE ASSY,LH & RH ARMREST.	1	32
	60-530139-11	. . . RELEASE ASSY.	1	33
		/ATTACHING PARTS/		
	AN509-8R7	. . . SCREW	1	
	AN960-8	. . . WASHER.	1	
	MS20364-832	. . . NUT	1	
		——*——		
-114	60-530139-29	. . . . HANDLE.	1	32
	60-530139-29	. . . . HANDLE.	1	33
-115	60-530139-31	. . . . SPRING.	1	32
	60-530139-31	. . . . SPRING.	1	33
-116	50-534547-29	. . . BOLT,LH ARMREST LATCH	1	18
	50-534547-30	. . . BOLT,RH ARMREST LATCH	1	18
	NAS77A6-35	. . . BUSHING	1	32
	NAS77A6-35	. . . BUSHING	1	33
	MS171505	. . . PIN,LATCH	1	32
	MS171505	. . . PIN,LATCH	1	33
-117	60-530139-127	. . . ARM,FWD	1	32
	60-530139-127	. . . ARM,FWD	1	33
-118	60-530139-129	. . . ARM,AFT	1	32
	60-530139-129	. . . ARM,AFT	1	33
		/ATTACHING PARTS/		
	AN3-10/M/	. . . BOLT.	2	
	AN960-10L	. . . WASHER.	2	
	MS20364-1032	. . . NUT	2	
		——*——		
-119	60-530139-21	. . . STOP,AFT ARM.	1	32
	60-530139-21	. . . STOP,AFT ARM.	1	33
		/ATTACHING PARTS/		
	PK89XA6-11	. . . SCREW	2	
		——*——		
-120	60-530139-37	. . . STOP,FWD ARM.	1	32
	60-530139-37	. . . STOP,FWD ARM.	1	33
		/ATTACHING PARTS/		
	AN509-8R12	. . . SCREW	1	
	AN960-8	. . . WASHER.	1	
	MS20364-832	. . . NUT	1	
		——*——		
-121	99-530073-15	. . COVER,ARM	2	36
	99-530073-15	. . COVER,ARM	2	37
	99-530073-14	. . COVER,ARM	2	35
	99-530073-14	. . COVER,ARM	2	39
-122	60-530139-35	. . CAP,AFT	1	32
	60-530139-35	. . CAP,AFT	1	33
		/ATTACHING PARTS/		
	NAS384-6P	. . SCREW	2	
	NAS390-6P	. . WASHER.	2	
		——*——		
-123	50-534527-5	. . CAP,FWD	1	32
	50-534527-5	. . CAP,FWD	1	33
		/ATTACHING PARTS/		
	AN531-6R4	. . SCREW	2	
		——*——		

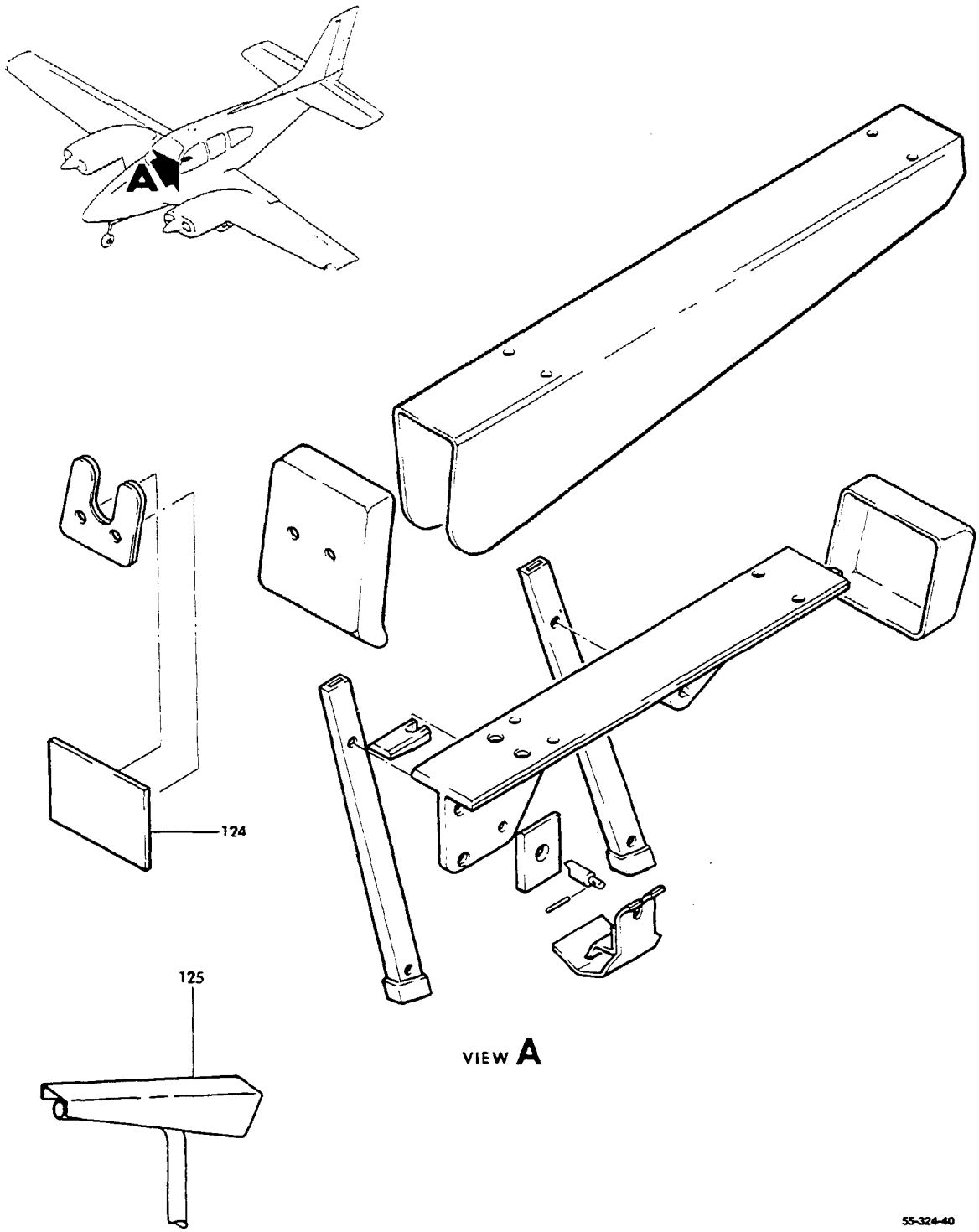

FIGURE 23-01.CABIN FURNISHING/MISCELLANEOUS/
/SHEET 10 OF 10 SHEETS/

SUB-SECT UNIT & ITEM NO.	PART NO.	DESCRIPTION 1 2 3 4 5 6 7	UNITS PER ASSY	USABLE ON CODE
23-01 -124	50-534536	. . DECAL,ARMREST	1	18
	95-534022-617	ARMREST ASSY,LH/FIFTH & SIXTH SEAT/	1	8
	95-534022-667	ARMREST ASSY,LH/FIFTH & SIXTH SEAT/	1	9
	95-534022-618	ARMREST ASSY,RH/FIFTH & SIXTH SEAT/	1	8
	95-534022-668	ARMREST ASSY,RH/FIFTH & SIXTH SEAT/	1	9
-125	95-534030-15	. FRAME ASSY,LH	1	38
	95-534030-16	. FRAME ASSY,RH	1	38
	95-534022-97	. COVER ASSY,ARMREST.	1	38

CODES OF EFFECTIVITY

1	TC-1 THRU TC-1042	2	TC-1043 THRU TC-1607 TE-1 THRU TE-942 EXCEPT TE-938
3	TC-1 THRU TC-1607 TE-1 THRU TE-942 EXCEPT TE-938	4	TC-1 THRU TC-241
5	TC-242 THRU TC-1607 TE-1 THRU TE-942 EXCEPT TE-938	6	TE-768 THRU TE-942 EXCEPT TE-938
7	TC-1454 THRU TC-1607 TE-850 THRU TE-942 EXCEPT TE-938	8	TC-1 THRU TC-190
9	TC-191 THRU TC-1298 TE-1 THRU TE-767	10	TC-1299 THRU TC-1402 TE-768 THRU TE-846
11	TE-452 THRU TE-767	12	TC-1403 THRU TC-1607 TE-847 THRU TE-942 EXCEPT TE-938
13	TE-452 THRU TE-767	14	TC-1 THRU TC-640
15	TC-238 THRU TC-640	16	TC-641 THRU TC-1298
17	TC-641 THRU TC-1298 TE-1 THRU TE-767	18	TC-1299 THRU TC-1607 TE-768 THRU TE-942 EXCEPT TE-938
19	TC-1 THRU TC-1607	20	TE-1 THRU TE-942 EXCEPT TE-938
21	TC-1 THRU TC-627	22	TC-628 THRU TC-1607 TE-1 THRU TE-942 EXCEPT TE-938
23	TC-1 THRU TC-1402 TE-1 THRU TE-846	24	TC-191 THRU TC-317
25	TC-318 THRU TC-1402 TE-768 THRU TE-942 EXCEPT TE-938	26	TC-1403 THRU TC-1607
27	TE-1 THRU TE-767	28	TC-191 THRU TC-1607
29	TC-191 THRU TC-1402 TE-1 THRU TE-451	30	TC-191 THRU TC-374
31	TC-375 THRU TC-1298 TE-1 THRU TE-451	32	TC-1299 THRU TC-1333 TE-768 THRU TE-803
33	TC-1334 THRU TC-1607 TE-804 THRU TE-942 EXCEPT TE-938	34	TC-1299 THRU TC-1333 TE-768 THRU TE-942 EXCEPT TE-938
35	TE-768 THRU TE-803	36	TC-1299 THRU TC-1333
37	TC-1334 THRU TC-1607	38	TC-1 THRU TC-1298 TE-1 THRU TE-767
39	TE-804 THRU TE-942 EXCEPT TE-938	40	TC-243 THRU TC-1607

"END"

25-28-01
CARPET AND SPAR COVERS
TC-1 THRU TC-190

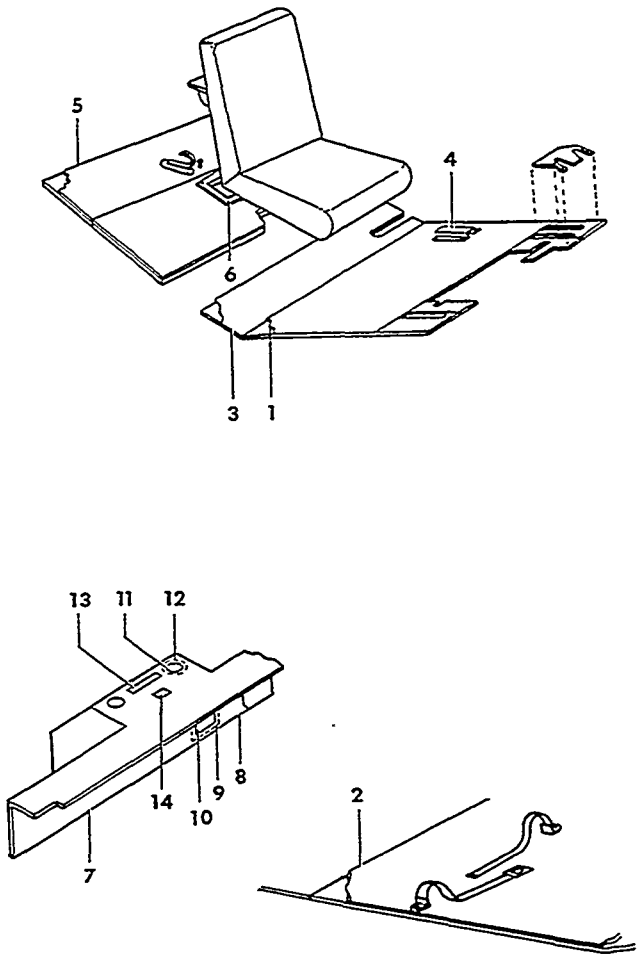

55-312-29

FIGURE 28-01.CARPET AND SPAR COVERS

SUB-SECT UNIT & ITEM NO.	PART NO.	DESCRIPTION 1 2 3 4 5 6 7	UNITS PER ASSY	USABLE ON CODE
28-01 - 1	35-534304-624	MAT,FRONT FLOORBOARD RUBBER/STANDARD/	1	1
	95-530000-625	MAT,FRONT FLOORBOARD RUBBER/OPTIONAL/	1	1
- 2	35-534304-626	MAT,REAR FLOORBOARD RUBBER/STANDARD/	1	1
	35-534304-627	MAT,REAR FLOORBOARD RUBBER/OPTIONAL/	1	1
	95-530002-612	MAT,BAGGAGE COMPARTMENT RUBBER/OPTIONAL/	1	1
	96-530001-616	CARPET ASSY,COMBINATION	1	2
- 3	96-530001-223	. CARPET ASSY,FRONT	1	2
- 4	35-534305-55	. BOOT	4	2
	35-534305-65	. BOOT/ALTERNATE FOR 35-534305-55/	4	2
	AN227-6	. BUTTON	20	2
	AN227-7B	. SOCKET	20	2
- 5	35-534305-39	. CARPET ASSY,REAR	1	2
	AN227-6	. BUTTON	14	2
	AN227-7B	. SOCKET	14	2
- 6	35-415380-22	. PAN	1	2
	R 35-534052	BOOT,LANDING GEAR EMERGENCY HAND CRANK	1	1
		/ATTACHING PARTS/		
	R NAS227-8B	FASTENER	1	
	R AN507-632-8	SCREW	1	
	R AN960-6	WASHER	1	
	R AN365-632	NUT	1	
		----*----		
	95-534010-603	PARTITION ASSY,FRONT SPAR FWD	1	3
	33-340000-61	COVER,FRONT SPAR FWD	1	4
		/ATTACHING PARTS/		
	AN530-6R12	SCREW	22	3
	AN960-6	WASHER	22	3
	PK65A4-6	SCREW	AR	4
		----*----		
- 7	95-534010-1	. PANEL,LH	1	3
	95-534010-2	. PANEL,RH	1	3
- 8	95-534010-7	. PANEL,CENTER	1	3
	AN530-6R	. SCREW	8	3
	AN960-6	. WASHER	8	3
	A6191-6Z	. NUT,ANCHOR	8	3
	AN366-832	. NUT,PLATE	8	3
	NAS395-6-1	. NUT	5	3
- 9	35-410420-14	. DOUBLER	1	3
	99871P098	. RECEPTACLE	4	3
- 10	35-410420-16	. DOOR	1	3
	98293-1-070	. STUD	4	3
	99785-2	. PIN,CROSS	4	3
	112416X10 3/4	. EXTRUSION	2	3
- 11	95-920001-125	. PLATE,FUEL SELECTOR BACK	2	3
	95-924015-5	. PLATE ASSY,FUEL SELECTOR VALVE IDENTIFICATION /LH/OPTIONAL/	1	3
	95-924015-6	. PLATE ASSY,FUEL SELECTOR VALVE IDENTIFICATION /RH/OPTIONAL/	1	3
		/ATTACHING PARTS/		
	AN507-832R	. SCREW	4	
		----*----		
- 12	95-924015-3	. . PLATE,FUEL SELECTOR/OPTIONAL/	1	3
	95-924020-1	. . PLACARD,FUEL SELECTOR LH	1	3
	95-924020-2	. . PLACARD,FUEL SELECTOR RH	1	3
- 13	95-921015	. PLACARD	1	3
- 14	95-924028	. PLACARD	1	3

CODES OF EFFECTIVITY

1 TC-1 THRU TC-190 2 TC-113 THRU TC-190
3 TC-1 THRU TC-180 4 TC-181 THRU TC-190

"END"

25-28-10
CARPET AND SPAR COVERS
TC-191 THRU TC-1402,TE-1 THRU TE-767

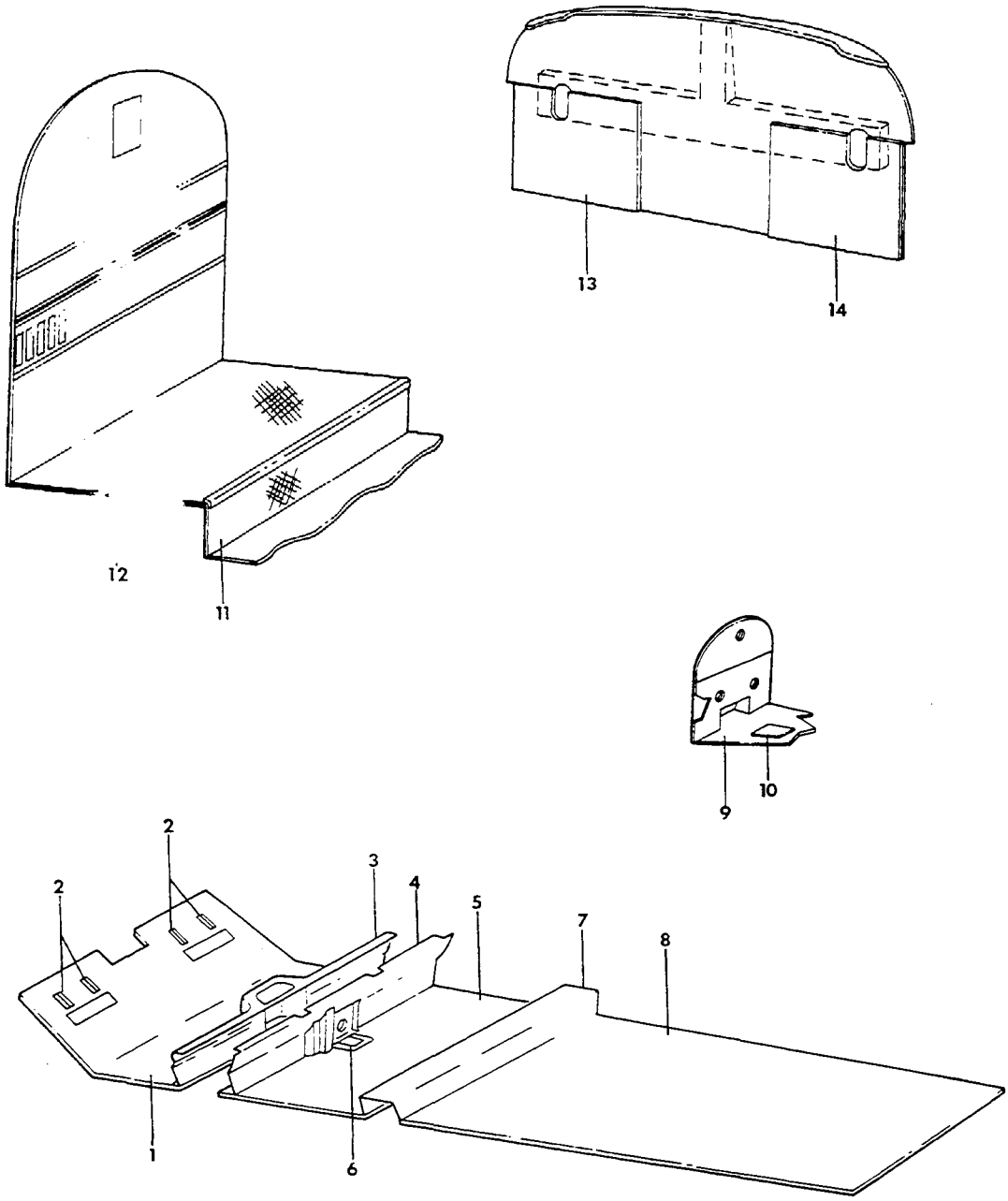

55-312-27

FIGURE 28-10.CARPET AND SPAR COVERS

SUB-SECT UNIT & ITEM NO.	PART NO.	DESCRIPTION 1 2 3 4 5 6 7	UNITS PER ASSY	USABLE ON CODE
28-10	96-530002-1	UPHOLSTERY INSTL/SOUND PROOFING/.	NP	1
	96-530002-3	UPHOLSTERY INSTL/SUPER SOUND PROOFING/.	NP	1
	96-530004-1	UPHOLSTERY INSTL/STANDARD BAGGAGE DOOR/	NP	2
	96-530004-3	UPHOLSTERY INSTL/UTILITY BAGGAGE DOOR/.	NP	2
	96-530006-1	UPHOLSTERY INSTL/STANDARD BAGGAGE DOOR/	NP	3
	96-530006-3	UPHOLSTERY INSTL/UTILITY BAGGAGE DOOR/.	NP	3
	35-534304-624	. MAT,FWD FLOORBOARD RUBBER/STANDARD/	1	1
	95-530000-625	. MAT,FWD FLOORBOARD RUBBER/OPTIONAL/	1	1
	96-530006-107	. PAD,FWD CARPET.	1	3
- 1	96-530004-165 C	. CARPET ASSY,FWD	1	4
	96-530002-55 C	. CARPET ASSY,FWD	1	2
- 2	35-534305-55	. . BOOT ASSY	8	5
	R 35-534052	. BOOT,LANDING GEAR EMERGENCY HAND CRANK. . . . /ATTACHING PARTS/	1	5
	R NAS227-8B	. FASTENER.	1	
	R AN507-632-8	. SCREW	1	
	R AN960-6	. WASHER.	1	
	R AN365-632	. NUT	1	
		----*----		
- 3	96-920013-5	. COVER ASSY,FRONT SPAR & FUEL SELECTOR VALVE .	1	4
	96-920013	. COVER ASSY,FRONT SPAR	1	2
	96-924024	. PLACARD	1	4
	96-530002-83 C	. PARTITION ASSY,FRONT SPAR	1	5
- 4	35-534191-15 C	. . COVER ASSY, ...	1	5
	96-530006-105	. PAD,CENTER CARPET	1	5
- 5	35-534305-39 C	. CARPET ASSY,CENTER.	1	5
- 6	35-415380-22	. PAN,CENTER CARPET ASSY.	1	5
- 7	95-530002-73 C	. COVER ASSY,AFT SPAR	1	5
	35-534304-626	. MAT,REAR FLOORBOARD RUBBER/STANDARD/.	1	1
	35-534304-627	. MAT,REAR FLOORBOARD RUBBER/OPTIONAL/.	1	1
	96-530006-103	. PAD,REAR CARPET	1	5
- 8	95-530002-53 C	. CARPET ASSY,REAR.	1	5
	95-530002-612	. MAT,BAGGAGE COMPARTMENT RUBBER/OPTIONAL/. . .	1	1
	95-410006-145	. CARPET ASSY,NOSE BAGGAGE COMPARTMENT.	1	1
	95-410006-71 C	. . CARPET,NOSE BAGGAGE	1	1
	95-410006-73 C	. . CARPET,NOSE BAGGAGE/ACCESS LID/	1	1
- 9	95-410031-29 C	. CARPET,NOSE BAGGAGE COMPARTMENT	1	6
- 10	95-410006-73 C	. CARPET,NOSE BAGGAGE/ACCESS LID/	1	6
- 11	96-530006-13 C	. CARPET,EXTENDED BAGGAGE COMPARTMENT/RISER/. .	1	5
- 12	96-530006-15 C	. CARPET,EXTENDED BAGGAGE COMPARTMENT	1	5
- 13	96-530004-197 C	. CARPET ASSY,AFT FIREWALL LH	1	6
- 14	96-530004-115	. CARPET ASSY,AFT FIREWALL RH	1	2
	96-530004-195	. CARPET ASSY,AFT FIREWALL RH	1	3
	96-530002-85 C	. CARPET ASSY,FRONT SPAR COVER CENTER . . . . . /ATTACHING PARTS/	1	5
	NAS384-6-6P	. SCREW	2	
	NAS391-6P	. WASHER.	2	
		----*----		

CODES OF EFFECTIVITY

1	TC-191 THRU TC-1402	2	TE-1 THRU TE-451
3	TE-452 THRU TE-767	4	TC-191 THRU TC-1402 TE-452 THRU TE-767
5	TC-191 THRU TC-1402 TE-1 THRU TE-767	6	TE-1 THRU TE-767

25-28-20
CARPET AND SPAR COVERS
TC-1403 THRU TC-1607
TE-768 THRU TE-942 EXCEPT TE-938

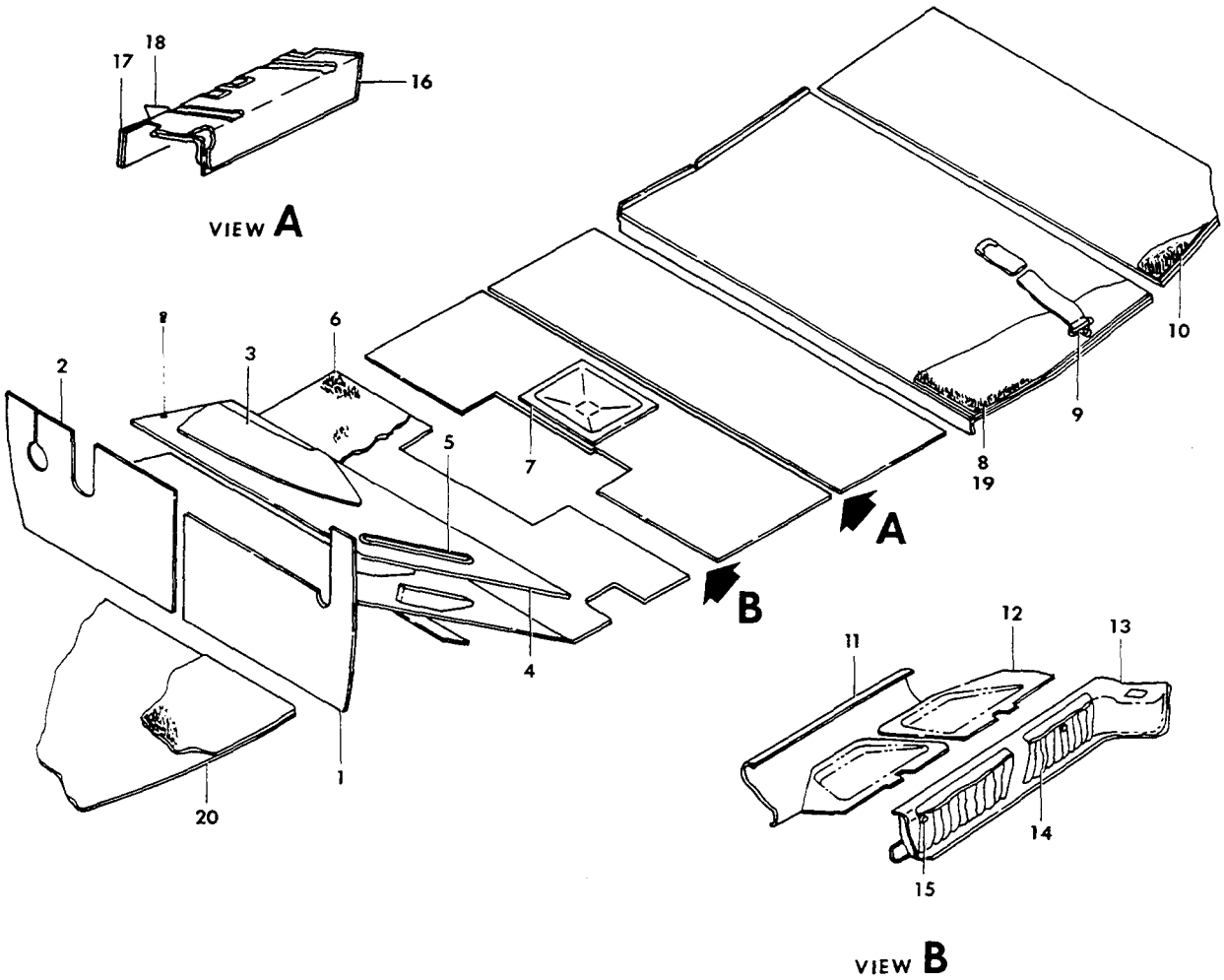

55-312-28

FIGURE 28-20. CARPET AND SPAR COVERS

SUB-SECT UNIT & ITEM NO.	PART NO.	DESCRIPTION 1 2 3 4 5 6 7	UNITS PER ASSY	USABLE ON CODE
28-20	96-530007-9	UPHOLSTERY INSTL/STANDARD/.	NP	1
	96-534125-1	UPHOLSTERY INSTL/STANDARD/.	NP	2
- 1	96-530007-231	. CARPET ASSY,LH FIREWALL	1	1
	96-530007-301	. CARPET ASSY,LH FIREWALL	1	2
	96-530007-232	. CARPET ASSY,RH FIREWALL	1	1
	96-530007-303	. CARPET ASSY,RH FIREWALL	1	2
- 2	96-530007-297	. COVER	2	1
- 3	96-530007-229	. WRAPPER,COWL/LH & RH/STA 100/	2	3
- 4	96-530007-215	. CARPET ASSY,FWD CABIN	1	3
- 5	35-534305-55	. . BOOT ASSY,RUDDER PEDAL.	8	3
	96-534125-3	. PAD,FWD CARPET FOAM	1	2
- 6	96-530007-217	. CARPET ASSY,CABIN CENTER.	1	3
	96-534125-5	. PAD,CENTER CARPET FOAM.	1	2
- 7	35-415380-22	. PAN	1	3
		/ATTACHING PARTS/		
	NAS384-6-12P	. SCREW	4	
		——+——		
- 8	96-530007-219	. CARPET ASSY,AFT CABIN	1	3
	96-534125-7	. PAD,AFT CARPET FOAM	1	2
- 9	96-534126-3	. STRAP ASSY,LH CABIN LUGGAGE TIE DOWN.	3	3
	96-534126-1	. BUCKLE ASSY,.	3	3
- 10	96-530007-221	. CARPET ASSY,AFT BAGGAGE COMPARTMENT	1	1
		/STA.170 THRU STA.190/		
- 11	96-530002-83	. PARTITION ASSY,FRONT SPAR	1	3
	33-534015-9	. COVER INSTL,FRONT SEAT STRUCTURE.	NP	3
- 12	33-534015-7	. . COVER ASSY,LH FRONT SEAT STRUCTURE.	1	3
	33-534015-8	. . COVER ASSY,RH FRONT SEAT STRUCTURE.	1	3
	R 35-534052	. BOOT,LANDING GEAR EMERGENCY HAND CRANK. . . .	1	3
		/ATTACHING PARTS/		
	R NAS227-8B	. FASTENER.	1	
	R AN507-632-8	. SCREW	1	
	R AN960-6	. WASHER.	1	
	R AN365-632	. NUT	1	
		——+——		
	96-920013-5	. COVER ASSY,FUEL SELECTOR VALVE.	1	3
		/ATTACHING PARTS/		
	AN530-6R8	. SCREW	16	
	PK65A4-6	. SCREW	2	
	AN960-6	. WASHER.	16	
	NAS395-6-1	. NUT	10	
		——+——		
- 13	96-920013-7	. . ESCUTCHEON.	1	3
- 14	96-920013-9	. . POCKET ASSY,MAP	2	3
		/ATTACHING PARTS/		
- 15	AN227-8	. . STUD/INSTALL ON ESCUTCHEON/	12	
	AN227-9	. . EYELET/INSTALL ON ESCUTCHEON/	12	
	AN227-6	. . BUTTON/INSTALL ON POCKET/	12	
	AN227-7	. . SOCKET/INSTALL ON POCKET/	12	
		——+——		
- 16	35-534067-2	. COVER ASSY,REAR SPAR.	1	3
- 17	96-530007-237	. CARPET,REAR SPAR.	1	1
	96-534125-9	. CARPET ASSY,REAR SPAR	1	2
- 18	96-530007-259	. CARPET,SCUFF PLATE.	1	3
	V12-1/80/100	. TAPE,CARPET ATTACH/VELCRO/.	AR	3
- 19	36-530011-23	CARPET ASSY,AFT CABIN/5TH & 6TH SEATS/.	1	3
	36-530011-25	CARPET ASSY,AFT CABIN/5TH SEAT ONLY/.	1	3
	36-530011-26	CARPET ASSY,AFT CABIN/6TH SEAT ONLY/.	1	3
- 20	96-410031-29	CARPET ASSY,NOSE BAGGAGE COMPARTMENT.	1	3

CODES OF EFFECTIVITY

1 TE-768 THRU TE-846

2 TC-1403 THRU TC-1607
TE-847 THRU TE-942
EXCEPT TE-938

3 TC-1403 THRU TC-1607
TE-768 THRU TE-942
EXCEPT TE-938

25-50-01
BAGGAGE WEBBING INSTALLATION

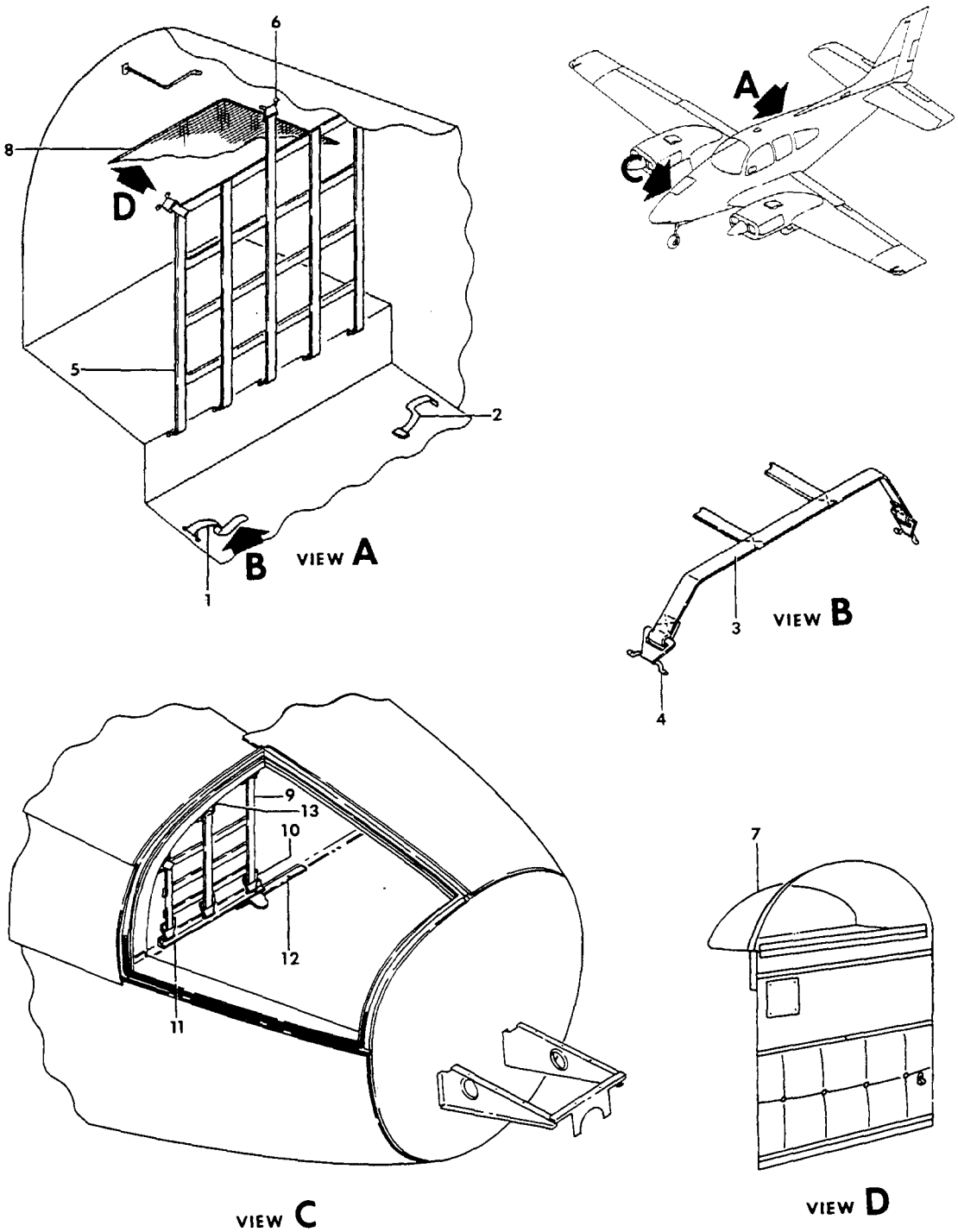

FIGURE 50-01. BAGGAGE WEBBING INSTALLATION

ATA CODE & INDEX NO.	PART NO.	DESCRIPTION 1 2 3 4 5 6 7	UNITS PER ASSY	USABLE ON CODE
50-01 - 1	95-530002-93	STRAP ASSY,AFT BAGGAGE HOLD DOWN.	3	1
- 2	95-530002-95	STRAP ASSY,AFT BAGGAGE HOLD DOWN.	3	1
	36-530045-1	STRAP INSTL,AFT BAGGAGE COMPARTMENT	NP	2
- 3	36-530045-3	. WEB ASSY,BAGGAGE HOLD DOWN.	1	2
- 4	6411B	. LOOP,FOOTMAN.	8	2
		/ATTACHING PARTS/		
	NAS387-1032	. SCREW	2	
	K1000-3	. NUT,PLATE	1	
	K2100-3	. NUT,PLATE	1	
		----*----		
- 5	96-534049-23	WEB ASSY/STA 170/	1	1
	414-180644-9	. HOOK.	3	1
- 6	6411B	. LOOP,FOOTMAN.	8	1
		/ATTACHING PARTS/		
	NAS387-832	. SCREW	2	
	MS20365-832	. NUT	2	
		----*----		
- 7	96-534011-5	SHELF,HAT	1	3
	96-534061-3	NET ASSY,HAT SHELF.	1	4
- 8	58-530030-11	NET ASSY,HAT SHELF.	1	5
	95-410033-1	WEBBING INSTL,FWD BAGGAGE COMPARTMENT LH LARGE.	NP	1
		/FLOORBOARD UPWARD/		
	95-410033-2	WEBBING INSTL,FWD BAGGAGE COMPARTMENT RH LARGE.	NP	1
		/FLOORBOARD UPWARD/		
	95-410033-33	WEBBING INSTL,FWD BAGGAGE COMPARTMENT LH SMALL.	NP	1
		/RADIO SHELF UPWARD/		
	95-410033-34	WEBBING INSTL,FWD BAGGAGE COMPARTMENT RH SMALL.	1	1
		/RADIO SHELF UPWARD/		
	95-410033-27	. WEB ASSY,NOSE BAGGAGE LH LARGE/STA 38.25/ . .	1	1
- 9	95-410033-28	. WEB ASSY,NOSE BAGGAGE RH LARGE/STA 38.25/ . .	1	1
	95-410033-47	. WEB ASSY,NOSE BAGGAGE LH SMALL.	1	1
	95-410033-48	. WEB ASSY,NOSE BAGGAGE RH SMALL.	1	1
- 10	95-410033-7	. HOOK.	3	1
- 11	95-410033-3	. ANGLE	1	1
- 12	95-410033-5	. ANGLE	1	1
- 13	6411B	. LOOP,FOOTMAN.	3	1
		/ATTACHING PARTS/		
	AN507-832R	. SCREW	2	
	AN960-8	. WASHER.	2	
	MS20365-832	. NUT	2	
		----*----		

CODES OF EFFECTIVITY

1 TC-1 THRU TC-1607
TE-1 THRU TE-942
EXCEPT TE-938

2 TE-768 THRU TE-942
EXCEPT TE-938

3 TC-1 THRU TC-1607

4 TE-1 THRU TE-767

5 TE-768 THRU TE-942
EXCEPT TE-938

"END"

25-60-01
EMERGENCY LOCATOR TRANSMITTER

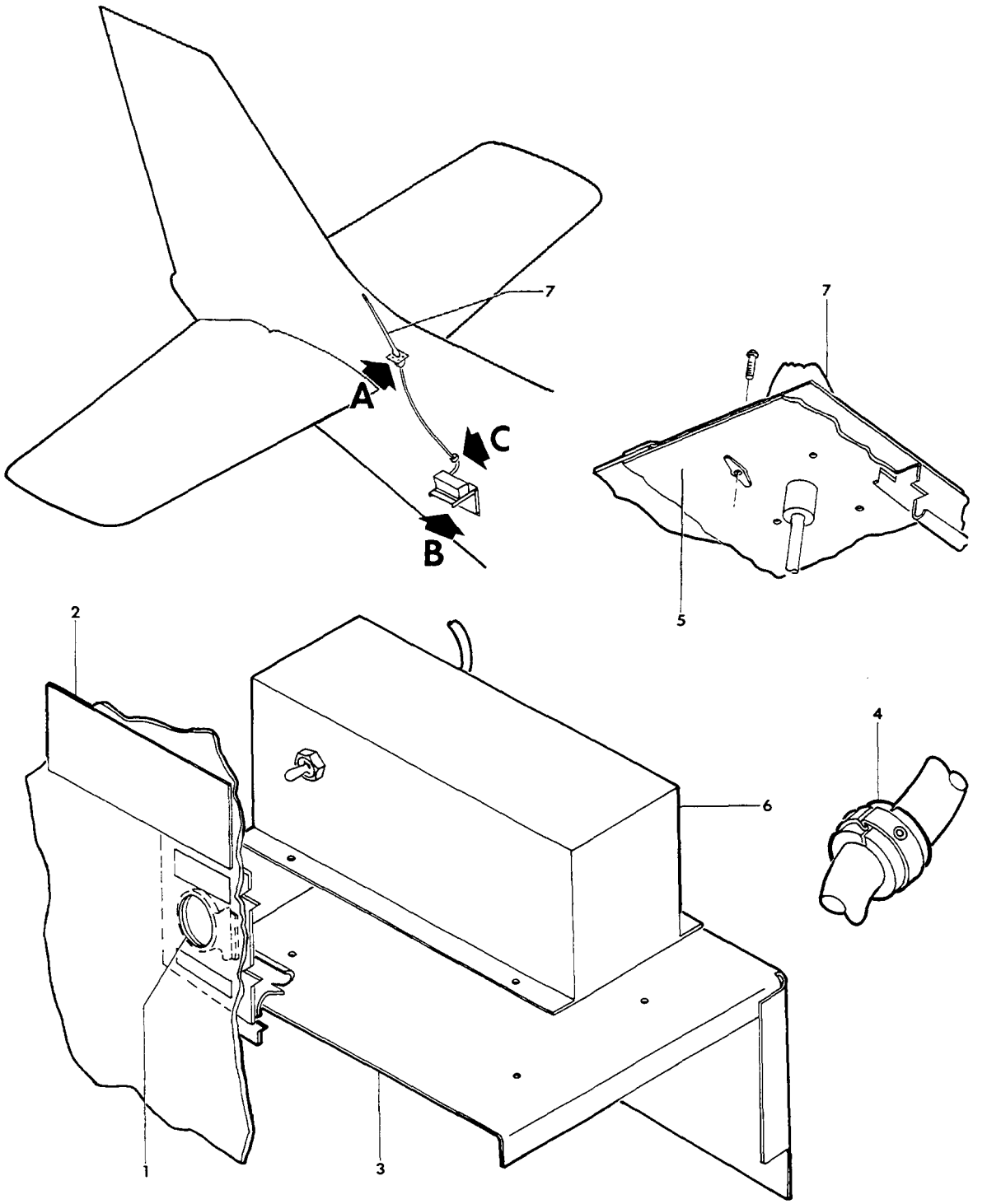

FIGURE 60-01.EMERGENCY LOCATOR TRANSMITTER

ATA CODE & INDEX NO.	PART NO.	DESCRIPTION 1 2 3 4 5 6 7	UNITS PER ASSY	USABLE ON CODE
60-01	36-340081-1	TRANSMITTER INSTL,EMERGENCY LOCATOR	NP	1
	36-340081-17	TRANSMITTER INSTL,EMERGENCY LOCATOR	NP	2
	36-340081-7	. DOUBLER	1	3
- 1	KM713-16-064	. DOOR,ACCESS	1	3
- 2	36-340082-5	. DECAL/BLACK/	1	3
	36-340082-7	. DECAL/WHITE/	1	3
	36-340081-11	. BRACKET ASSY	1	3
- 3	36-340081-13	. . BRACKET	1	3
	MS21047L08	. . NUTPLATE	4	3
- 4	49296	. CLIP	AR	3
	SCMS-P	. BLOCK,SWIVEL	AR	3
	S40555	. BLOCK,SWIVEL/ALTERNATE FOR SCMS-P/	AR	3
	MS18034-1	. CABLE TIE	AR	3
	MS17821-1-9	. CABLE TIE/ALTERNATE FOR MS18034-1/	AR	3
	36-340081-9	. DOUBLER,ANTENNA	1	4
	36-340081-15	. DOUBLER,ANTENNA	1	5
- 5	36-340081-19	. DOUBLER,ANTENNA	1	2
	MS21047L08	. NUTPLATE	4	2
	C1R10-16	TRANSMITTER ASSY,EMERGENCY LOCATOR	1	1
	C1R10-19	TRANSMITTER ASSY,EMERGENCY LOCATOR	1	2
- 6	TR70-17	. TRANSMITTER,EMERGENCY	1	3
		/ATTACHING PARTS/		
	NAS1096-2-6	. SCREW	4	
	AN960-8	. WASHER	4	
		——*——		
	ELT10-158	. ANTENNA	1	1
- 7	ELT10-214-1	. ANTENNA	1	2
		/ATTACHING PARTS/		
	AN960-916	. WASHER	2	1
	MS35338-50	. WASHER	1	1
	AN924-6D	. NUT/FURNISHED WITH ANTENNA/	2	1
	MS24693S50	. SCREW	4	2
		——*——		

CODES OF EFFECTIVITY

1 TC-1 THRU TC-1492
TE-1 THRU TE-885

2 TC-1493 THRU TC-1607
TE-886 THRU TE-942
EXCEPT TE-938

3 TC-1 THRU TC-1607
TE-1 THRU TE-942
EXCEPT TE-938

4 TC-1 THRU TC-1463
TE-1 THRU TE-872

5 TC-1464 THRU TC-1492
TE-873 THRU TE-885

"END"

CHAPTER

26

FIRE PROTECTION

LIST OF PAGES & TABLE OF CONTENTS
FOR
CHAPTER 26-00-00 FIRE PROTECTION

CHAP/SUB-SECT & UNIT	PAGE NO.	EFFECTIVE DATE	TABLE OF CONTENTS
26-00-00	1	04/05/85.	LIST OF PAGES & TABLE OF CONTENTS . . . . .
26-20-01	1	04/05/85.	PORTABLE FIRE EXTINGUISHER/REFERENCE/ . . . . .

26-20-01
PORTABLE FIRE EXTINGUISHER/REFERENCE/
SEE CHAPTER 25-23-01 FOR PORTABLE
FIRE EXTINGUISHER

"END"

CHAPTER

27

FLIGHT CONTROLS

LIST OF PAGES & TABLE OF CONTENTS FOR CHAPTER 27-00-00 FLIGHT CONTROLS

CHAP/SUB-SECT & UNIT	PAGE NO.	EFFECTIVE DATE	TABLE OF CONTENTS
27-00-00	1	04/05/85	LIST OF PAGES & TABLE OF CONTENTS
27-00-00	2	04/05/85	
27-10-01	1	03/10/78	AILERON & AILERON TAB CONTROLS
27-10-01	2	03/10/78	
27-10-01	3	04/05/85	
27-10-01	4	03/10/78	
27-10-01	5	04/05/85	
27-10-01	6	03/10/78	
27-10-01	7	03/10/78	
27-10-01	8	03/10/78	
27-10-01	9	03/10/78	
27-10-01	10	03/10/78	
27-10-01	11	04/05/85	
27-10-01	12	03/10/78	
27-10-01	13	03/10/78	
27-10-10	1	03/10/78	ACTUATOR ASSY,AILERON
27-10-10	2	03/10/78	
27-10-10	3	03/10/78	
27-10-20	1	03/10/78	CONTROL ARM AND CONTROL COLUMN
27-10-20	2	03/10/78	
27-10-20	3	04/05/85	
27-10-20	4	03/10/78	
27-10-20	5	03/10/78	
27-10-20	6	03/10/78	
27-10-20	7	03/10/78	
27-10-20	8	03/10/78	
27-10-20	9	04/05/85	
27-10-30	1	03/10/78	AILERON TRIM TAB CONTROLS,CONSOLE
27-10-30	2	03/10/78	
27-10-30	3	03/10/78	
27-10-30	4	03/10/78	
27-10-30	5	03/10/78	
27-20-01	1	03/10/78	RUDDER & RUDDER TAB CONTROLS
27-20-01	2	03/10/78	
27-20-01	3	04/30/84	
27-20-01	4	03/10/78	
27-20-01	5	04/05/85	
27-20-10	1	03/10/78	ACTUATOR ASSY,RUDDER TRIM TAB
27-20-10	2	03/10/78	
27-20-10	3	04/30/84	
27-20-15	1	03/10/78	RUDDER TRIM TAB CONTROLS,CONSOLE
27-20-15	2	03/10/78	
27-20-15	3	03/10/78	
27-20-20	1	03/10/78	RUDDER PEDALS AND LINKAGE
27-20-20	2	03/10/78	
27-20-20	3	03/10/78	
27-20-20	4	03/10/78	
27-20-20	5	03/10/78	
27-20-20	6	03/10/78	
27-20-20	7	03/10/78	
27-20-20	8	03/10/78	
27-20-20	9	04/30/84	

LIST OF PAGES & TABLE OF CONTENTS
FOR
CHAPTER 27-00-00 FLIGHT CONTROLS

CHAP/SUB-SECT & UNIT	PAGE NO.	EFFECTIVE DATE	TABLE OF CONTENTS
27-30-01	1	03/10/78	ELEVATOR & ELEVATOR TAB CONTROLS
27-30-01	2	03/10/78	
27-30-01	3	04/05/85	
27-30-01	4	03/10/78	
27-30-01	5	03/10/78	
27-30-01	6	03/10/78	
27-30-01	7	04/05/85	
27-30-11	1	04/05/85	ELEVATOR TRIM TAB ACTUATOR
27-30-11	2	04/05/85	
27-30-11	3	04/05/85	
27-30-11	4	04/05/85	
27-30-11	5	04/05/85	
27-30-11	6	04/05/85	
27-30-11	7	04/05/85	
27-30-20	1	03/10/78	ELEVATOR TRIM TAB CONTROLS,CONSOLE
27-30-20	2	03/10/78	
27-30-20	3	03/10/78	
27-30-20	4	03/10/78	
27-30-20	5	03/10/78	
27-30-30	1	04/05/85	ELEVATOR ELECTRIC TRIM TAB CONTROL
27-30-30	2	03/10/78	TE-633 THRU TE-937,TE-939 THRU TE-942
27-30-30	3	04/05/85	
27-30-30	4	03/10/78	
27-30-30	5	04/05/85	
27-50-01	1	04/05/85	FLAP MECHANISM INSTALLATION
27-50-01	2	04/05/85	
27-50-01	3	04/05/85	
27-50-01	4	04/05/85	
27-50-01	5	04/05/85	
27-50-10	1	03/10/78	FLAP MOTOR AND GEARBOX
27-50-10	2	03/10/78	
27-50-10	3	04/05/85	
27-50-20	1	03/10/78	FLAP SWITCH AND POSITION INDICATOR
27-50-20	2	03/10/78	
27-50-20	3	04/05/85	
27-50-20	4	03/10/78	
27-50-20	5	03/10/78	
27-50-20	6	03/10/78	
27-50-20	7	03/10/78	
27-50-30	1	03/10/78	FLAP POSITION TRANSMITTER,LIMIT &
27-50-30	2	03/10/78	SAFETY SWITCHES
27-50-30	3	04/05/85	
27-70-01	1	03/10/78	LOCK ASSY,CONTROL SURFACE & THROTTLE
27-70-01	2	04/30/84	
27-70-01	3	04/05/85	

27-10-01
AILERON & AILERON TAB CONTROLS

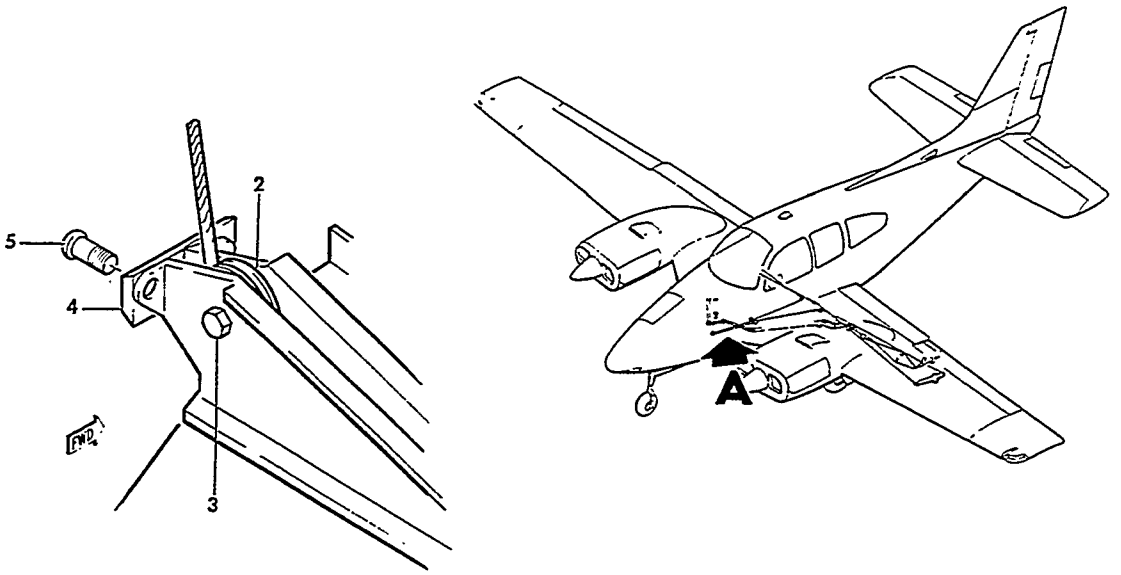

VIEW B

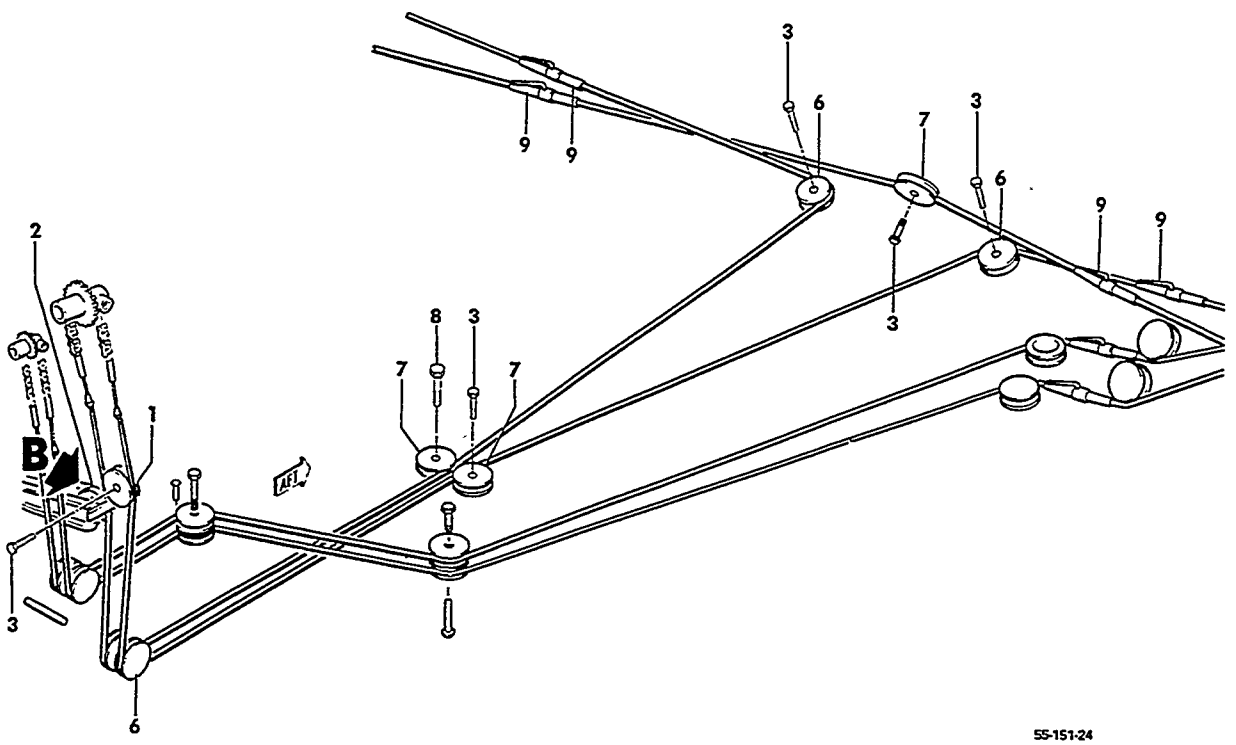

VIEW A

FIGURE 10-01.AILERON & AILERON TAB CONTROLS
/SHEET 1 OF 6 SHEETS

SUB-SECT UNIT & ITEM NO.	PART NO.	DESCRIPTION 1 2 3 4 5 6 7	UNITS PER ASSY	USABLE ON CODE
10-01	96-524000	CONTROLS INSTL,FUSELAGE AILERON FLIGHT.	NP	1
	96-524000-33	CONTROLS INSTL,FUSELAGE AILERON FLIGHT.	NP	2
- 1	130000BEP3	. PULLEY,AILERON CONTROL CABLE.	2	1
		/ATTACHING PARTS/		
	13001B82	. BEARING	1	
	AN4-10A	. BOLT.	1	
	AN960-416	. WASHER.	1	
	MS20365-428	. NUT	1	
		----*----		
- 2	118540BHP3	. PULLEY,AILERON CONTROL CABLE.	2	2
		/ATTACHING PARTS/		
- 3	AN4-10A	. BOLT.	1	
	AN960-416	. WASHER.	1	
	MS20365-428	. NUT	1	
		----*----		
	MS20392-1C19	. PIN,CABLE RETAINING	2	
	MS24665-132	. PIN,COTTER.	AR	
- 4	35-524309	. FAIRLEAD.	1	
		/ATTACHING PARTS/		
- 5	AN22-7A/M/	. BOLT.	2	
	AN960-8	. WASHER.	2	
	MS20361-832	. NUT	2	
		----*----		
- 6	118540BHP4	. PULLEY,AILERON CONTROL CABLE.	4	
		/ATTACHING PARTS/		
	AN4-10A	. BOLT,AILERON CONTROL CABLE PULLEY	1	
	AN4-42A/M/	. BOLT,AILERON TAB CONTROL PULLEY	1	
	AN960-416	. WASHER.	1	
	MS20365-428	. NUT	1	
		----*----		
	R MS20392-1C23	. PIN,CABLE RETAINING	4	
	MS20392-1C35	. PIN,CABLE RETAINING	1	
	MS24665-132	. PIN,COTTER.	AR	
- 7	130000BEP4	. PULLEY,AILERON CONTROL CABLE.	3	
		/ATTACHING PARTS/		
	13001B82	. BEARING	1	
- 8	8105077-10A	. BOLT/RH ONLY/	1	
	AN960-416	. WASHER.	1	
	MS20365-428	. NUT	1	
		----*----		
	MS20392-1C23	. PIN,CABLE RETAINING	4	
- 9	MS2125185L	. TURNBUCKLE.	4	
	MS21256-2	. CLIP,TURNBUCKLE LOCKING	4	

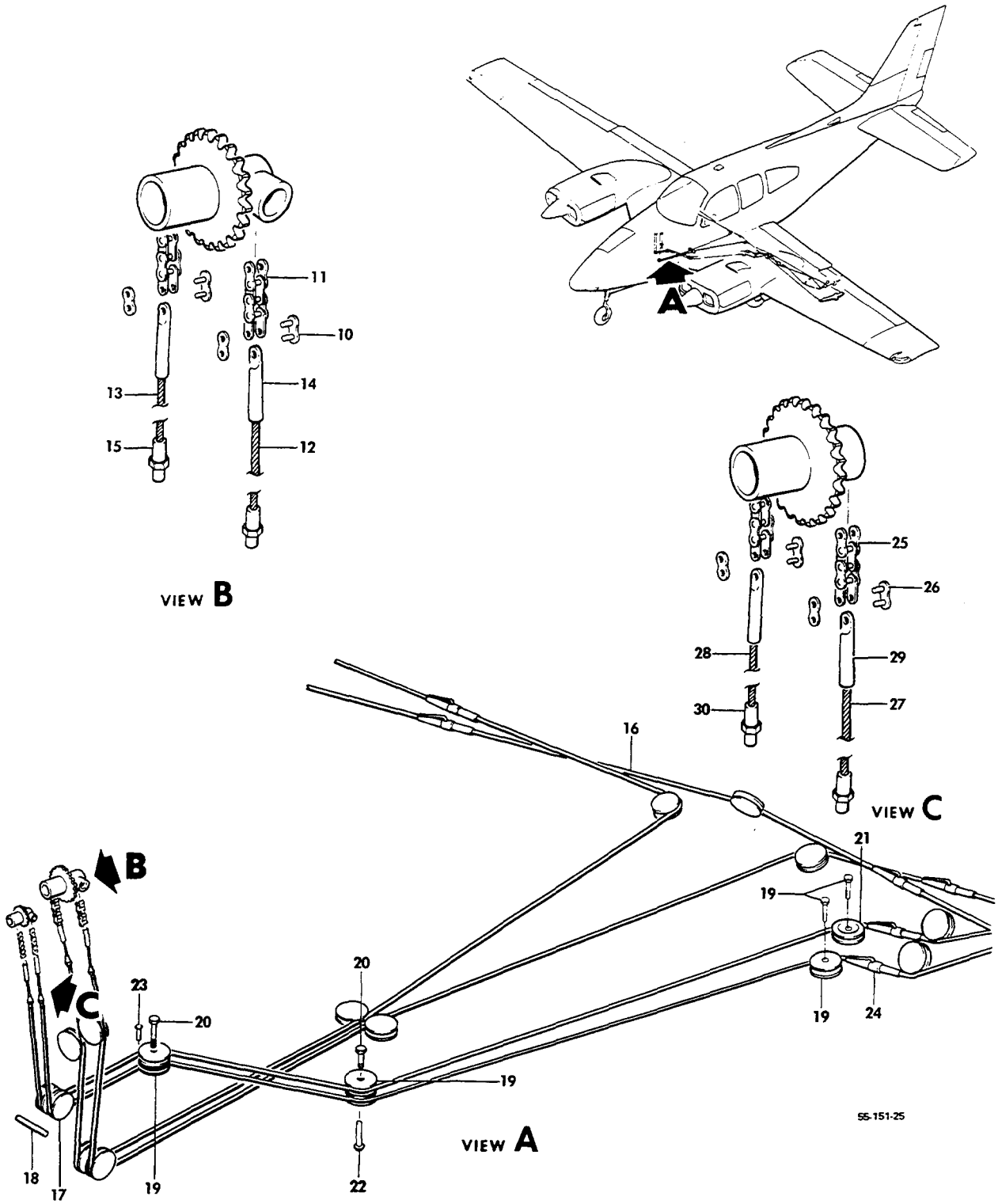

FIGURE 10-01.AILERON & AILERON TAB CONTROL
/SHEET 2 OF 6 SHEETS

SUB-SECT UNIT & ITEM NO.	PART NO.	DESCRIPTION 1 2 3 4 5 6 7	UNITS PER ASSY	USABLE ON CODE
10-01	95-524000-7	CHAIN & CABLE ASSY,AILERON CONTROL CABLE	1	
- 10	88	LINK,MASTER	2	
- 11	35-524314-10	CHAIN	1	
- 12	95-524000-31	CABLE,LH AILERON CONTROL	1	
- 13	95-524000-33	CABLE,RH AILERON CONTROL	1	
- 14	35-524175	TERMINAL,CHAIN TO CABLE	2	
- 15	MS21260L4RH	TERMINAL/SUPERSEDES AN669L4RH/	2	
- 16	NAS305-55-1043	CABLE,AILERON CONTROL	1	
- 17	118540BHP4	PULLEY,AILERON TAB CONTROL CABLE	2	
		/ATTACHING PARTS/		
	AN4-42A/M/	BOLT	1	
	AN960-416	WASHER	1	
	MS20365-428	NUT	1	
		----*----		
- 18	95-524000-21	PIN,CABLE RETAINING	1	
	MS24665-132	PIN,COTTER	AR	
- 19	118540BHP2	PULLEY,AILERON TAB CONTROL CABLE	6	
		/ATTACHING PARTS/		
- 20	AN3-12A/M/	BOLT	1	
- 21	AN3-6A/M/	BOLT	1	
	AN960-10	WASHER	3	
	MS20365-428	NUT	1	
		----*----		
- 22	MS20392-1C27	PIN,CABLE RETAINING	2	
- 23	MS20392-1C17	PIN,CABLE RETAINING LH	1	
	R NAS427K14	PIN,CABLE RETAINING RH	1	
- 24	MS21251B2S	TURNBUCKLE,BARREL/SUPERSEDES AN155-8S/	2	
	95-524000-11	CABLE ASSY,AILERON TAB CONTROL	1	
- 25	95-524000-37	CHAIN	1	
- 26	C4189	LINK,MASTER	2	
- 27	95-524000-9	CABLE,LH AILERON TAB CONTROL	1	
- 28	95-524000-35	CABLE,RH AILERON TAB CONTROL	1	
- 29	NAS287-25-2	TERMINAL,CABLE TO CHAIN	1	
- 30	MS21260S2LH	TERMINAL	1	

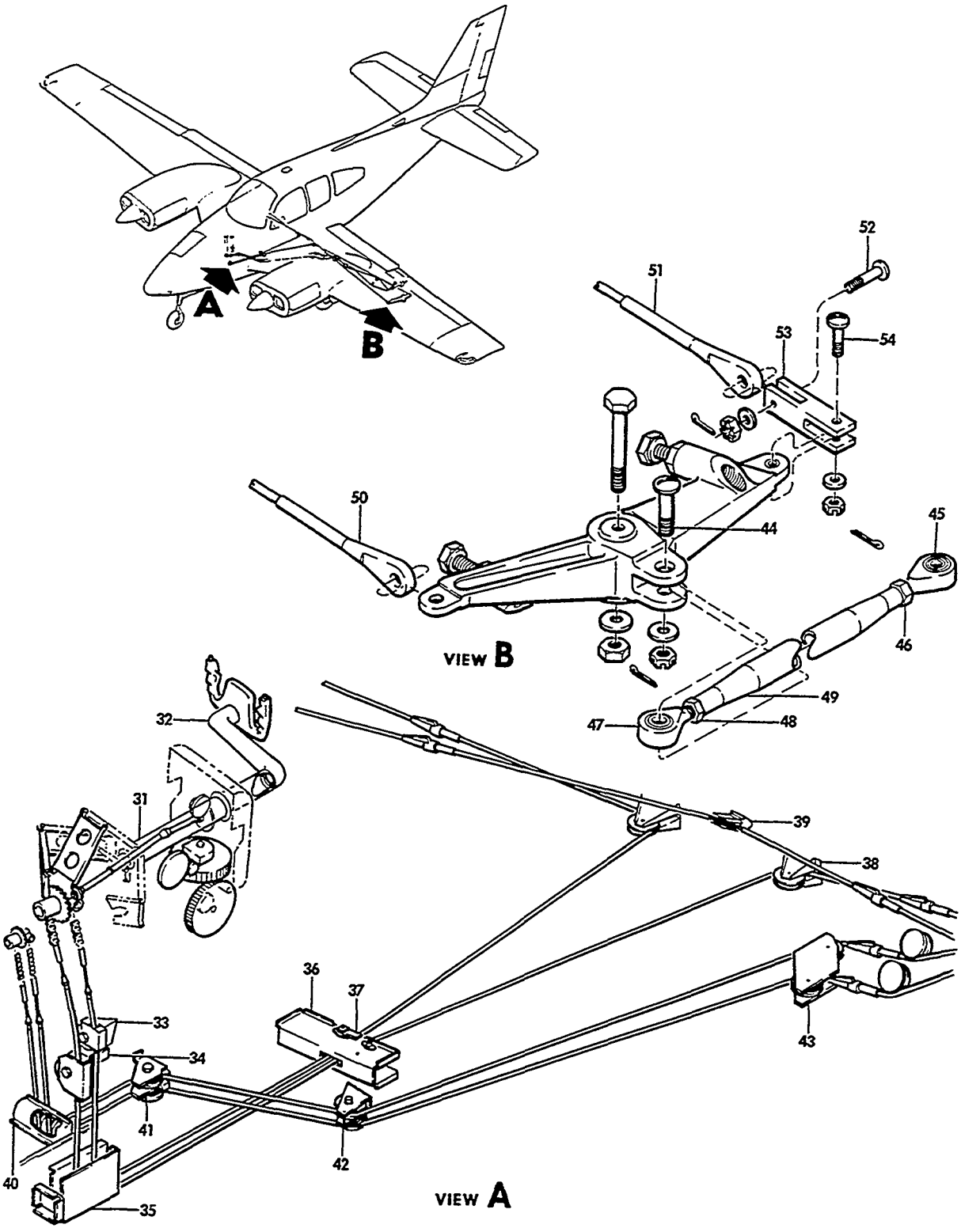

FIGURE 10-01.AILERON & AILERON TAB CONTROL
/SHEET 3 OF 6 SHEETS/

ATA CODE & INDEX NO.	PART NO.	DESCRIPTION 1 2 3 4 5 6 7	UNITS PER ASSY	USABLE ON CODE
10-01 - 31	96-524017-601	CONTROL COLUMN ASSY/SEE CHAPTER 27-10-20/ . . .	1	
- 32	58-524037-601	CONTROL ARM ASSY,SINGLE/SEE CHAPTER 27-10-20/ .	1	
	58-524038-601	CONTROL ARM ASSY,DUAL/OPT/SEE CHAPTER 27-10-20.	1	
- 33	96-324035-29	BRACKET,PULLEY/PART OF CONSOLE/	1	
- 34	96-324055-91	BRACKET,PULLELY/PART OF CONSOLE/.	1	
		/ATTACHING PARTS/		
	AN509-10R8	SCREW	2	
	AN960-10	WASHER.	2	
	MS20365-1032	NUT	2	
		——*——		
- 35	35-400339-2	BRACKET,AILERON PULLEY/STA 49.0/.	1	
	35-410259-24	BRACKET ASSY,AILERON PULLEY	1	
- 36	35-410259-22	. BRACKET	1	
- 37	35-410278	. FAIRLEAD.	1	
- 38	95-420006-33	BRACKET,LH PULLEY/PART OF REAR SPAR CARRYTHRU/.	1	
	95-420006-34	BRACKET,RH PULLEY/PART OF REAR SPAR CARRYTHRU/.	1	
- 39	35-410158-16	BRACKET,PULLEY/PART OF REAR SPAR CARRYTHRU/ . .	1	
- 40	95-420011-61	BRACKET ASSY,AILERON TAB PULLEY	1	
- 41	95-524000-29	BRACKET,AILERON TAB PULLEY.	1	
- 42	95-524000-5	BRACKET,AILERON TAB PULLEY.	1	
- 43	95-524000-3	BRACKET,AILERON TAB PULLEY.	1	
	95-521000-1	CONTROLS INSTL,LH WING FLIGHT	NP	
	95-521000-2	CONTROLS INSTL,RH WING FLIGHT	NP	
	95-521000-605	. BELLCRANK & CABLE ASSY,AILERON LH	1	
	95-521000-606	. BELLCRANK & CABLE ASSY,AILERON RH	1	
	35-521152	. . ROD ASSY,AILERON CONTROL.	1	
		/ATTACHING PARTS/		
- 44	35-521187	. . BOLT.	1	
	AN960-416L	. . WASHER.	1	
	AN320-4	. . NUT	1	
	MS24665-132	. . PIN,COTTER.	1	
		——*——		
- 45	HM4	. . . END,ROD	1	
- 46	AN316-4R	. . . NUT,CHECK	1	
- 47	HML4	. . . END,ROD	1	
- 48	AN316-4L	. . . NUT,CHECK	1	
- 49	35-521152-4	. . . TUBE,CONTROL ROD.	1	
- 50	NAS305-34-0652	. . CABLE ASSY,FWD.	1	
- 51	NAS305-35-0672	. . CABLE ASSY,AFT.	1	
		/ATTACHING PARTS/		
- 52	AN24-12/M/	. . BOLT.	1	
	AN960-416L	. . WASHER.	1	
	MS17826-4	. . NUT/SUPERSEDES AN320-4/	1	
	MS24665-132	. . PIN,COTTER.	1	
		——*——		
- 53	35-521190	. . FITTING,AILERON CABLE	2	
		/ATTACHING PARTS/		
- 54	35-521186	. . BOLT.	1	
	AN960-10L	. . WASHER.	1	
	MS17826-3	. . NUT/SUPERSEDES AN320-3/	1	
	MS24665-132	. . PIN,COTTER.	1	
		——*——		

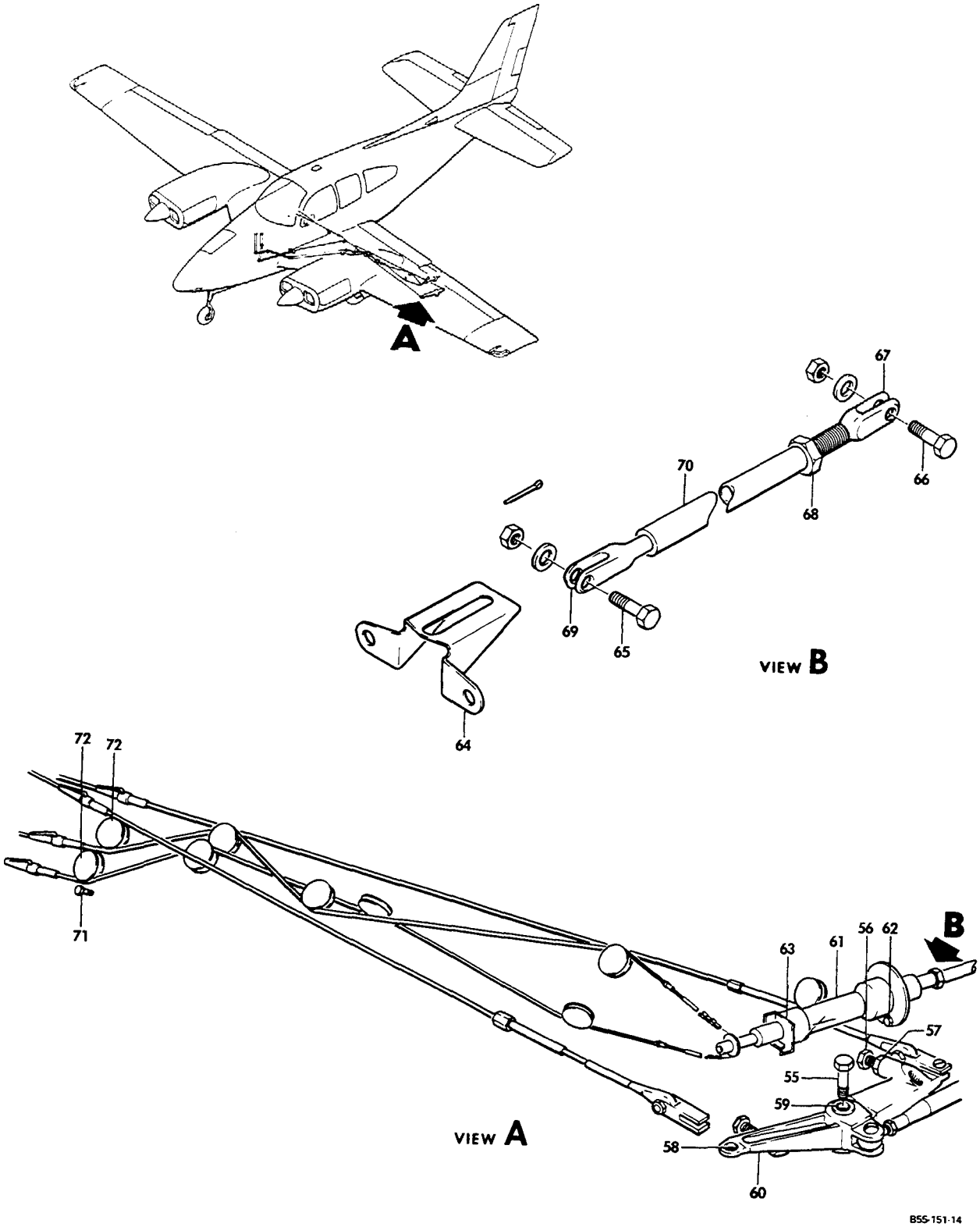

FIGURE 10-01.AILERON & AILERON TAB CONTROL
/SHEET 4 OF 6 SHEETS/

ATA CODE & INDEX NO.	PART NO.	DESCRIPTION 1 2 3 4 5 6 7	UNITS PER ASSY	USABLE ON CODE
10-01	35-521158-7	. . BELLCRANK ASSY,AILERON LH	1	
	35-521158-8	. . BELLCRANK ASSY,AILERON RH	1	
		/ATTACHING PARTS/		
- 55	AN4-17A/M/	. . BOLT.	1	
	AN960-416	. . WASHER.	1	
	AN310-4	. . NUT	1	
	MS24665-132	. . PIN,COTTER.	1	
		——*——		
- 56	131002-9	. . . BOLT,STOP/SUPERSEDES S185-111-003/. . . .	2	
- 57	AN316-5R	. . . NUT,CHECK	2	
- 58	105740X-Z60190	. . . BUSHING	2	
- 59	AR4	. . . BEARING	2	
- 60	35-521158-2	. . . BELLCRANK,LH.	1	
	35-521158-3	. . . BELLCRANK,RH.	1	
- 61	95-521000-603	. ACTUATOR ASSY,AILERON TRIM TAB/LH WING ONLY/.	1	
		/SEE CHAPTER 27-10-10/		
		/ATTACHING PARTS/		
- 62	AN3-5A/M/	. BOLT.	4	
	AN960-10	. WASHER.	4	
	MS20365-1032	. NUT	2	
		——*——		
- 63	45-521011	. BRACKET,TAB ACTUATOR FWD.	1	
		/ATTACHING PARTS/		
	AN515-8R6	. SCREW	2	
		——*——		
- 64	45-526008	. BRACKET,TAB ACTUATOR AFT.	1	
		/ATTACHING PARTS/		
	AN3-5A	. BOLT.	2	
	AN960-10	. WASHER.	2	
	MS20365-1032	. NUT/SUPERSEDES AN365-1032/.	2	
		——*——		
	96-520012-5	. TUBE ASSY,AILERON TAB ACTUATOR.	1	
		/ATTACHING PARTS/		
- 65	NAS1103-4D	. BOLT,FWD/SUPERSEDES NAS53-5/.	1	
	AN960D10L	. WASHER.	1	
	AN320-3	. NUT	1	
	MS24665-132	. PIN,COTTER.	1	
- 66	AN4-10/M/	. BOLT,AFT.	1	
	AN960-416	. WASHER.	1	
	MS20365-428	. NUT	1	
		——*——		
- 67	96-526012	. . END,ROD	1	
- 68	AN316-4R	. . NUT,CHECK	1	
- 69	96-526011	. . END,ROD	1	
- 70	96-520012-7	. . TUBE,AILERON TRIM ACTUATOR.	1	
- 71	45-524624	. STOP,TAB CABLE ADJUSTABLE	2	
		/ATTACHING PARTS/		
	MS20365-524	. NUT	1	
	AN960-516	. WASHER.	2	
		——*——		
	95-521000-11	. BRACKET,PULLEY,LH WING/WING STA 23.88/. . . .	2	
- 72	1300008EP1	. PULLEY,AILERON TAB CABLE/WING STA 23.88/. . .	2	
		/ATTACHING PARTS/		
	AN3-6A/M/	. BOLT.	1	
	130001BB1	. BEARING	1	
	AN960-1032	. WASHER.	3	
	MS20365-1032	. NUT	1	
		——*——		
	MS20392-1C17	. PIN,CABLE RETAINING/SUPERSEDES AN392-17/. . .	2	
	MS24665-132	. PIN,COTTER.	2	

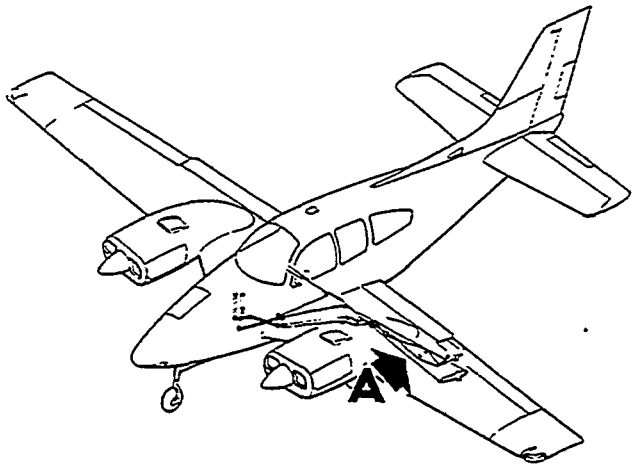

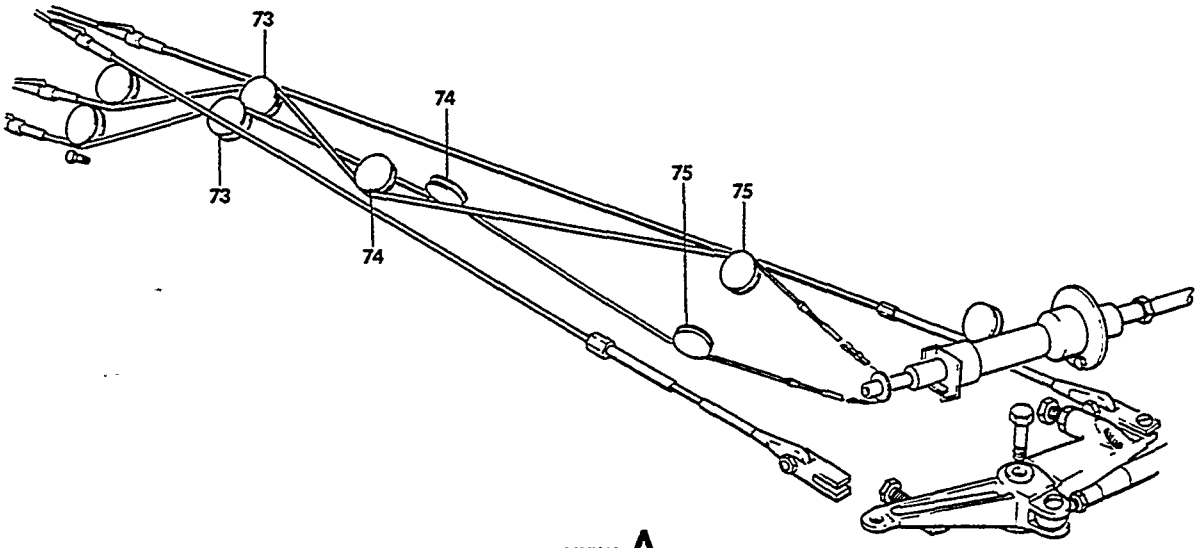

VIEW A

855-151-15

FIGURE 10-01.AILERON & AILERON TAB CONTROL
/SHEET 5 OF 6 SHEETS/

SUB-SECT UNIT & ITEM NO.	PART NO.	DESCRIPTION 1 2 3 4 5 6 7	UNITS PER ASSY	USABLE ON CODE
10-01	95-521000-9	. BRACKET,PULLEY/WING STA 34.375/	2	
- 73	1300008EP1	. PULLEY,AILERON TAB CABLE/LH WING STA 34.375/. /ATTACHING PARTS/	2	
	AN3-6A/M/	. BOLT.	1	
	130001BB1	. BEARING	1	
	AN960-10	. WASHER.	3	
	MS20365-1032	. NUT	1	
		----*----		
	MS20392-1C17	. PIN,CABLE RETAINING/SUPERSEDES AN392-17/. . .	2	
	MS24665-132	. PIN,COTTER.	2	
	95-521000-31	. BRACKET,PULLEY/LH WING STA 66.00/	2	
- 74	130000BEP1	. PULLEY,AILERON TAB CABLE/LH WING STA 66.00/ . /ATTACHING PARTS/	2	
	AN3-6A/M/	. BOLT.	1	
	130001BB1	. BEARING	1	
	AN960-10	. WASHER.	2	
	AN960-10L	. WASHER.	1	
	MS20365-1032	. NUT	1	
		----*----		
	MS20292-1C17	. PIN,CABLE RETAINING/SUPERSEDES AN392-17/. . .	2	
	MS24665-132	. PIN,COTTER.	2	
	45-521112	. BRACKET,PULLEY/LH WING STA 94.094/UPPER . . .	1	
	45-521113	. BRACKET,PULLEY/LH WING STA 94.094/LOWER . . .	1	
- 75 R	1300008EP1	. PULLEY,AILERON TAB CABLE/LH WING STA 94.094/. /ATTACHING PARTS/	2	
	AN3-7A/M/	. BOLT,UPPER PULLEY	1	
	AN3-6A/M/	. BOLT,LOWER PULLEY	1	
	130001BB1	. BEARING	1	
	AN960-10	. WASHER,,UPPER	2	
	AN960-10L	. WASHER,LOWER.	1	
	MS20365-1032	. NUT	1	
		----*----		

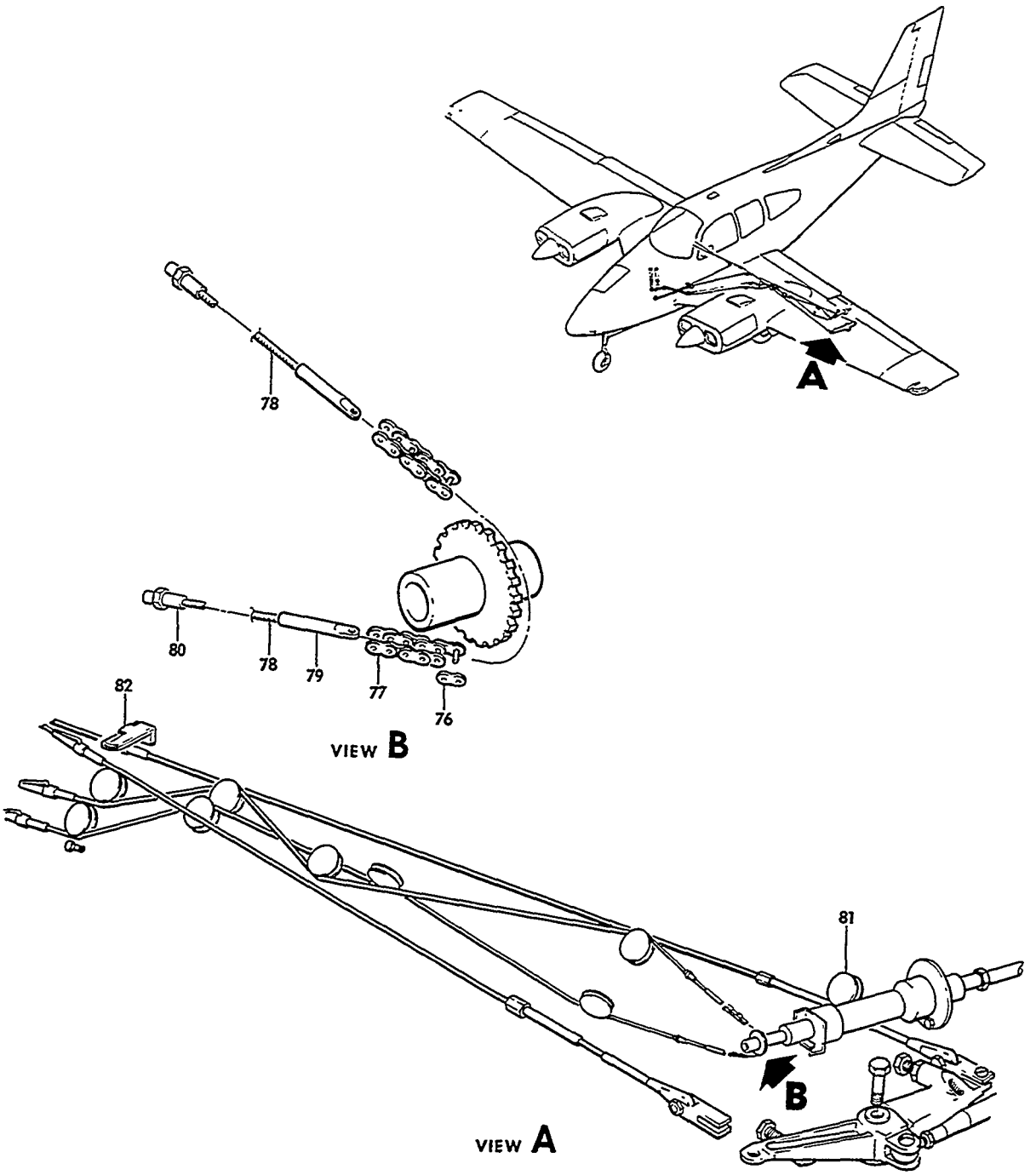

FIGURE 10-01.AILERON & AILERON TAB CONTROL
/SHEET 6 OF 6 SHEETS/

ATA CODE & INDEX NO.	PART NO.	DESCRIPTION 1 2 3 4 5 6 7	UNITS PER ASSY	USABLE ON CODE
10-01	95-521000-33	CHAIN & CABLE ASSY,AILERON TRIM TAB OUTBD	1	
- 76	C4189	LINK,MASTER	2	
- 77	45-524615-9	CHAIN	1	
- 78	95-521000-35	CABLE,AILERON TRIM TAB.	2	
- 79	NAS287-25-2	TERMINAL.	2	
- 80	MS21260S2RH	TERMINAL.	2	
	60-524185-1	BRACKET,AILERON PULLEY/LH WING STA 108.281/	1	
	60-524185-2	BRACKET,AILERON PULLEY/RH WING STA 108.281/	1	
- 81	118540BHP3	PULLEY,AILERON CABLE/RH & LH WG STA 108.281/. /ATTACHING PARTS/	2	
	AN4-10A/M/	BOLT.	1	
	AN960-416	WASHER.	1	
	MS20365-428	NUT	1	
	MS20392-1C19	PIN,CABLE RETAINING	2	
	MS24665-132	PIN,COTTER.	2	
	95-521000-37	TAB,AILERON CABLE RUB/WING STA 39.00/	1	
- 82	95-521000-45	BRACKET ASSY,LH	1	
	95-521000-46	BRACKET ASSY,RH	1	
	95-521000-41	RUB STRIP	1	
	95-521000-27	FAIRLEAD/LH WING STA 80.340/.	1	

CODES OF EFFECTIVITY

1 TC-1 THRU TC-1607 EXCEPT TC-350

2 TC-350 & TE-1 THRU TE-942 EXCEPT TE-938

"END"

27-10-10
ACTUATOR ASSY,AILERON

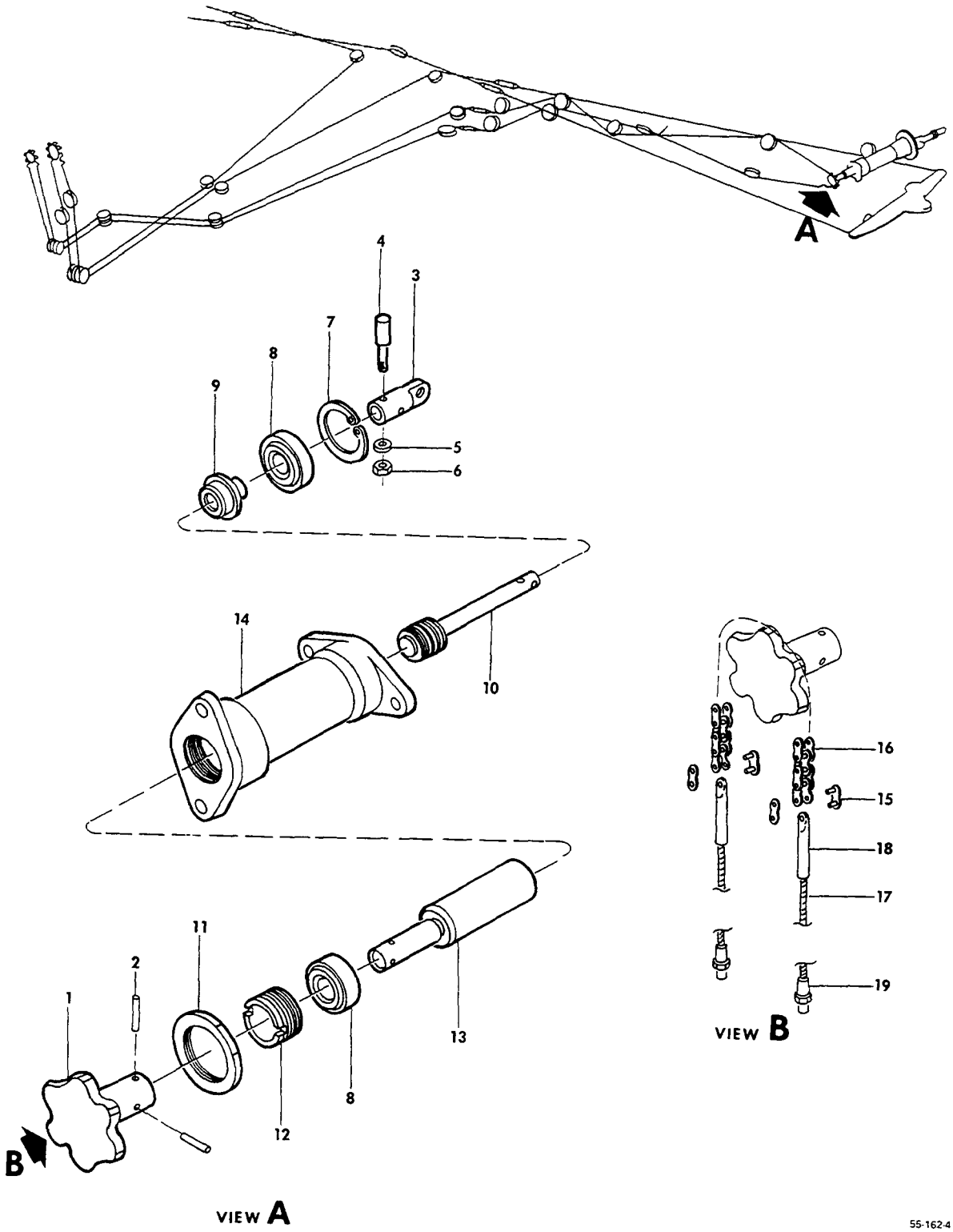

FIGURE 10-10.ACTUATOR ASSY,AILERON

ATA CODE & INDEX NO.	PART NO.	DESCRIPTION 1 2 3 4 5 6 7	UNITS PER ASSY	USABLE ON CODE
10-10	95-521000-603	ACTUATOR ASSY	1	
- 1	45-521100-3	. SPROCKET,AILERON TAB ACTUATOR	1	
		/ATTACHING PARTS/		
- 2	MS9048-068	. PIN /SUPERSEDES 52-022-094-0437/	2	
		——*——		
	45-524560	. ACTUATOR ASSY	1	
- 3	45-524563	. . END	1	
		/ATTACHING PARTS/		
- 4	96-524032	. . PIN,SHOULDER /SUPERSEDES NAS42HT3-28	1	
		SPACER & AN470AD3 RIVET/		
- 5	AN960-4	. . WASHER	1	
- 6	MS20365-440	. . NUT	1	
		——*——		
- 7	NAS50-87	. . RING,SNAP	1	
- 8	AN201KP6A	. . BEARING	2	
- 9	45-524562	. . BUSHING	1	
- 10	45-524566-7	. . SCREW,TRIM TAB ACTUATOR	1	
- 11	45-524564	. . NUT	1	
- 12	45-524569	. . BUSHING,NUT ASSY END ADJUST	1	
- 13	45-524557-1	. . NUT ASSY,TRIM TAB ACTUATOR	1	
- 14	45-524561-1	. . HOUSING,TAB ACTUATOR	1	
	95-521000-33	CHAIN AND CABLE ASSY,AILERON TRIM	1	
- 15	C4189	. LINK,MASTER,CHAIN TO CABLES	2	
- 16	45-524615-9	. CHAIN	1	
- 17	95-521000-35	. CABLE ASSY	2	
- 18	NAS287-25-2	. TERMINAL,CHAIN TO CABLE	2	
- 19	MS21260S2RH	. TERMINAL	2	

"END"

27-10-20
CONTROL ARM AND CONTROL COLUMN

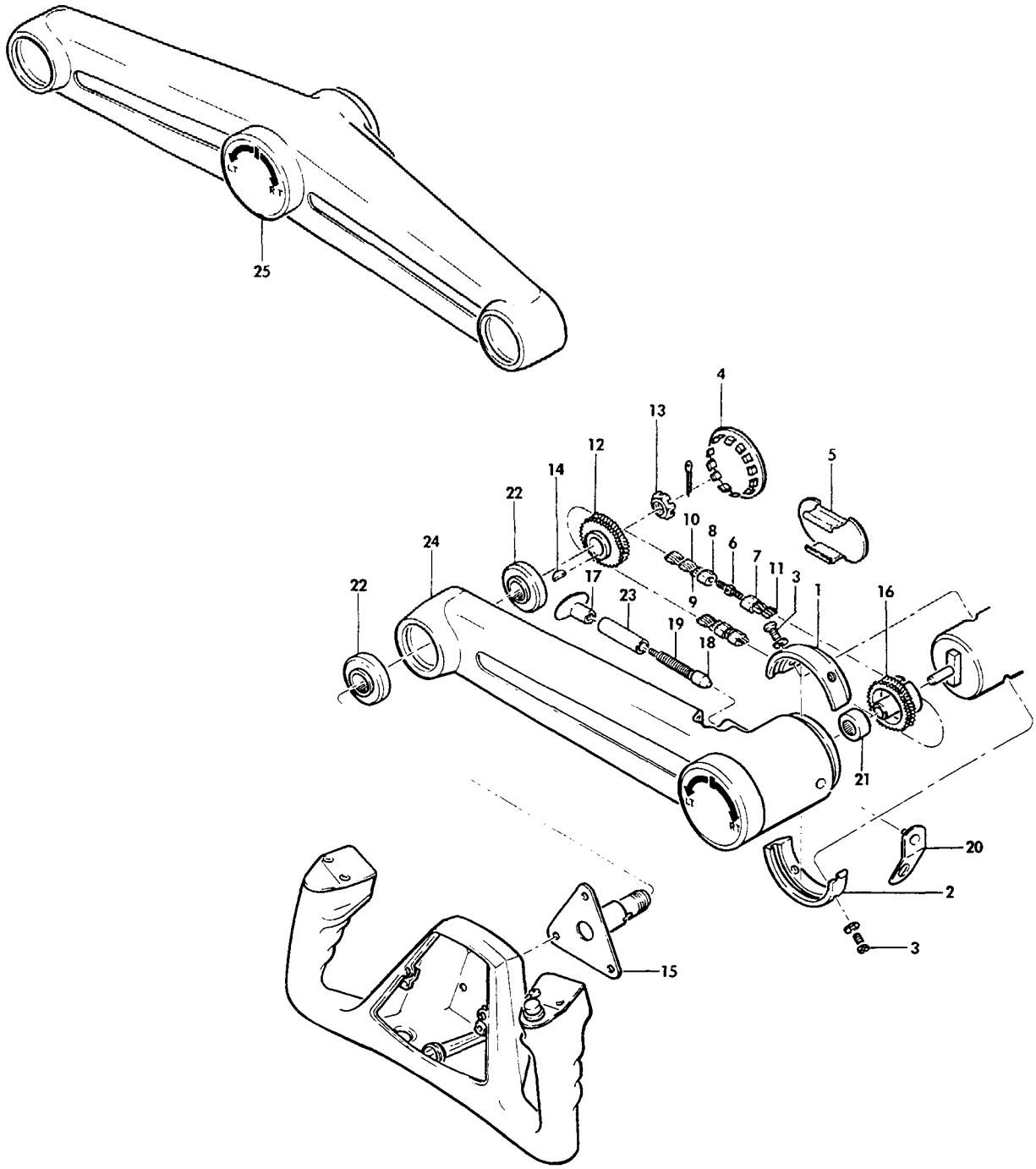

FIGURE 10-20.CONTROL ARM AND CONTROL COLUMN
/SHEET 1 OF 4 SHEETS/

SUB-SECT UNIT & ITEM NO.	PART NO.	DESCRIPTION 1 2 3 4 5 6 7	UNITS PER ASSY	USABLE ON CODE
10-20	58-524037-1	ARM INSTL,CONTROL COLUMN-SINGLE	NP	1
	R 96-524011	ARM INSTL,CONTROL COLUMN-SINGLE	NP	2
		SEE BEECHCRAFT SERVICE INSTRUCTION 0523-155 REVISION ONE/ORDER KIT 36-5002-3/		
	58-524038-1	ARM INSTL,CONTROL COLUMN-DUAL	NP	1
	95-524034	ARM INSTL,CONTROL COLUMN-DUAL	NP	2
		SEE BEECHCRAFT SERVICE INSTRUCTION 0523-155 REVISION ONE/ORDER KIT 36-5002-1/		
- 1	35-524238-4	. RETAINER,CONTROL ARM UPPER.	1	
- 2	35-524238-12	. RETAINER,CONTROL ARM LOWER.	1	
		/ATTACHING PARTS/		
- 3	MS35266-60	. SCREW	2	
	AN935-10L	. WASHER,LOCK	2	
		----*----		
	35-524585-8	. SHIM /ALTERNATE FOR 35-524585-10/	AR	
	35-524585-10	. SHIM /ALTERNATE FOR 35-524585-8/.	AR	
	58-524037-601	. ARM ASSY,SINGLE CONTROL/SPARES FOR 35-524087/	1	1
	58-524038-601	. ARM ASSY,DUAL CONTROL/SPARES FOR 35-524261 &.	1	1
		35-524261-6/SEE S.I.0523-155,REV I/		
- 4	51020	. . BUTTON,PLUG,SINGLE CONTROL.	1	
	51020	. . BUTTON,PLUG,DUAL CONTROL.	2	
- 5	35-524587	. . COVER,ACCESS.	1	
	35-524587-2	. . COVER,ACCESS DUAL CONTROL /WITH PENLIGHT. .	1	
		HOLDER/		
- 6	35-524141	. . CONNECTOR,CHAIN ADJUSTING /SINGLE CONTROL/.	2	
	35-524141	. . CONNECTOR,CHAIN ADJUSTING /DUAL CONTROL/. .	4	
	35-524139	. . CHAIN ASSY,SINGLE CONTROL	NP	2
		/SEE S.I.0523-155,REV I/		
	58-524039-1	. . CHAIN ASSY,SINGLE CONTROL/REPLS 35-524139/.	1	1
	35-524139	. . CHAIN ASSY,DUAL CONTROL	NP	2
		/SEE S.I.0523-155,REV I/		
	58-524039-1	. . CHAIN ASSY,DUAL CONTROL/REPL 35-524139/ . .	2	1
- 7	58-524036-1	. . . TERMINAL,CHAIN TO CONNECTOR	1	
- 8	58-524036-3	. . . TERMINAL,CHAIN TO CONNECTOR	1	
- 9	C6189	. . . LINK,CONNECTING	2	
- 10	58-524039-3	. . . CHAIN	1	
	58-524039-5	. . CHAIN ASSY,SINGLE CONTROL/REPLS 35-524139/.	1	1
	58-524039-5	. . CHAIN ASSY,DUAL CONTROL/REPLS 35-524139/. .	2	1
- 11	58-524039-7	. . . CHAIN	1	
	35-524048	. . SPROCKET,SINGLE CONTROL	NP	2
		/SEE S.I.0523-155,REV I/		
- 12	58-524035-1	. . SPROCKET,SINGLE CONTROL/RPLS 35-524048/ . .	1	1
	35-524048	. . SPROCKET,DUAL CONTROL	NP	2
		/SEE S.I.0523-155,REV I/		
	58-524035-1	. . SPROCKET,DUAL CONTROL/REPL 35-524048/ . . .	2	1
		/ATTACHING PARTS/		
	MS24665-136	. . PIN,COTTER.	1	
- 13	MS17826-7	. . NUT,CASTELLATED	1	
- 14	AN280H404	. . KEY	1	
		----*----		
- 15	96-524029-21	. . ADAPTOR ASSY,CONTROL WHEEL /SINGLE & LH/. .	1	
	96-524029-23	. . ADAPTOR ASSY,CONTROL WHEEL/RH,DUAL CONTROL/	1	
	R 35-524051-1	. . SPROCKET,SINGLE CONTROL	NP	2
- 16	58-524034-1	. . SPROCKET,SINGLE CONTROL/REPL 35-524051-1/ .	1	1
	R 35-524262	. . SPROCKET,DUAL CONTROL	NP	2
	58-524040-1	. . SPROCKET,DUAL CONTROL/REPL 35-524262/ . . .	1	1
- 17	35-524096-1	. . KNOB,CONTROL ARM POSITION /SINGLE CONTROL/.	1	
- 18	35-524095-1	. . PIN,CONTROL ARM POSITION /SINGLE CONTROL/ .	1	
- 19	100943ZG108G	. . SPRING /SINGLE CONTROL/	1	
- 20	50-524315	. . PIN ASSY,DUAL CONTROL	1	
		/ATTACHING PARTS/		
	MS51958-60	. . SCREW	1	
	AN936B10	. . WASHER,LOCK	1	
		----*----		
	35-524087	. . ARM ASSY,SINGLE CONTROL	1	
	35-524261-27	. . ARM ASSY,DUAL CONTROL	1	
- 21	878	. . . BEARING	1	
- 22	MS27641-10	. . . BEARING,SINGLE ARM /SUPERSEDES AN201K10A/	2	
	MS27641-10	. . . BEARING,DUAL ARM /SUPERSEDES AN201K10A/ .	4	
- 23	35-524241	. . . BUSHING,SINGLE CONTROL POSITION PIN . . .	1	
- 24	35-524087-2	. . . ARM,SINGLE.	1	
	1191-3CNX285	. . . INSERT,DUAL CONTROL	1	
- 25	35-524261-19	. . . ARM,DUAL CONTROL.	1	

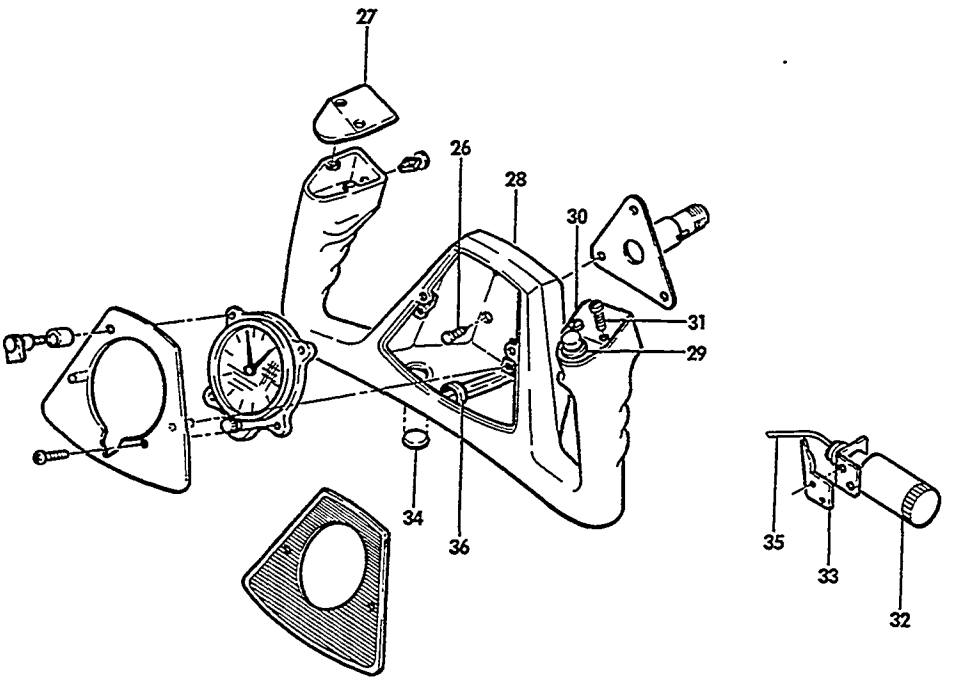

VIEW A

55-155-6

FIGURE 10-20.CONTROL ARM AND CONTROL COLUMN
/SHEET 2 OF 4 SHEETS/

ATA CODE & INDEX NO.	PART NO.	DESCRIPTION 1 2 3 4 5 6 7	UNITS PER ASSY	USABLE ON CODE
10-20	60-524080-9	. . CONTROL WHEEL ASSY,SINGLE CONTROL OR LH . . WHEEL,FOR DUAL CONTROL	1	
	60-524080-10	. . CONTROL WHEEL ASSY,RH DUAL CONTROL.	1	
		/ATTACHING PARTS/		
- 26	AN23-10A/M/	. . BOLT /SUPERSEDES AN23-10A/.	3	
	AN960-10L	. . WASHER.	3	
	MS21042L3	. . NUT /SUPERSEDES MS21083D3/.	3	
		——+——		
- 27	50-524594	. . . PLATE,COVER	1	
		/ATTACHING PARTS/		
	NAS387-440-4P	. . . SCREW	2	
		——+——		
- 28	60-524080-13	. . . WHEEL,SINGLE CONTROL OR LH DUAL CONTROL . /MAKE FROM 60-524080-17/	1	
	60-524080-14	. . . WHEEL,RH DUAL CONTROL . . . . . /MAKE FROM 60-524080-17/	1	
	96-364090-17	. . LIGHT INSTL,MAP-CONTROL WHEEL /SINGLE . . . CONTROL OR LH DUAL/	NP	
	96-364090-2	. . LIGHT INSTL,MAP/CONTROL WHEEL/RH DUAL/OPT/.	NP	
- 29	L18366-3	. . . SWITCH,MAP LIGHT.	1	
	L18366-5	. . . SWITCH,MAP LIGHT/LH/.	1	
- 30	96-364090-21	. . . PLATE ASSY,SINGLE CONTROL OR LH DUAL. . .	1	
	96-364090-25	. . . PLATE ASSY,RH DUAL WHEEL.	1	
		/ATTACHING PARTS/		
- 31	NAS387-440-4P	. . . SCREW	2	
		——+——		
	96-364090-3	. . . BRACKET ASSY,LAMP /SINGLE CONTROL & LH. . DUAL CONTROL WHEEL/	1	
	96-364090-4	. . . BRACKET ASSY,LAMP/RH DUAL CONTROL/. . . .	1	
- 32	96-364090-11	. . . . LAMPHOLDER.	1	
- 33	96-364090-5	. . . . BRACKET,LH WHEEL & SINGLE WHEEL	1	
	96-364090-6	. . . . BRACKET,RH WHEEL.	1	
- 34	96-364090-9	. . . LENS,MAP LIGHT.	1	
	1495	. . . LAMP /28 VOLT/.	1	
- 35	36-500004-51	. . . COILED WIRE,SINGLE CONTROL & LH DUAL. . . /SUPERSEDES 96-524031-11/CLOCK MAY BE	1	
	8409	. . . COILED WIRE,RH WHEEL DUAL CONTROL	1	
	26119	. . . TERMINAL,CORD TO SWITCH	2	
	MS21104D6	. . . CLAMP,SINGLE CONTROL & LH DUAL. . . . . /SUPERSEDES MS21919DG2	2	
	MS21919DG2	. . . CLAMP,RH DUAL CONTROL	2	
		/ATTACHING PARTS/		
	AN530-8R6	. . . SCREW	1	
		——+——		
- 36	MS21919DG3	. . . CLAMP,CORD TO WHEEL	1	
		/ATTACHING PARTS/		
	MS35207-263	. . . SCREW /SUPERSEDES AN520-10R8/	1	
	AN960-10	. . . WASHER.	1	
	MS20364-1032	. . . NUT	1	
		——+——		
	MS35489-40	. . . GROMMET,SINGLE CONTROL OR LH DUAL . . . . /SUPERSEDES MS35489-35/	1	
	MS35489-35	. . . GROMMET,RH DUAL CONTROL	1	

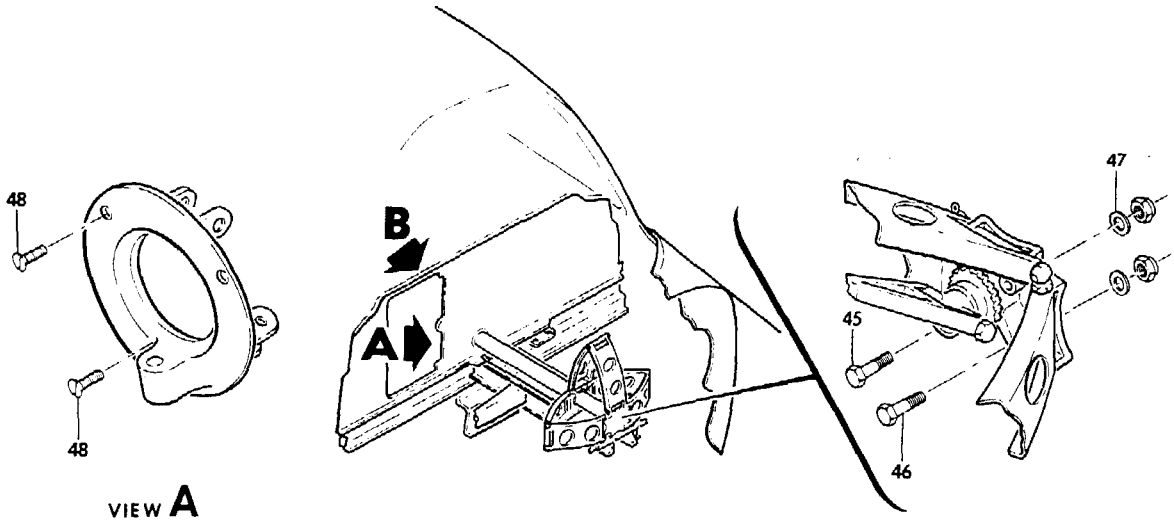

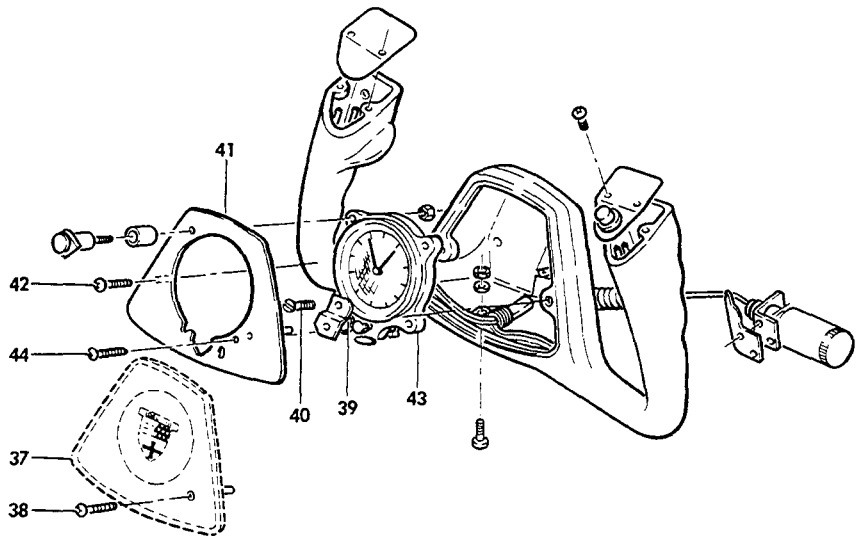

55-155-7

FIGURE 10-20.CONTROL ARM AND CONTROL COLUMN
/SHEET 3 OF 4 SHEETS/

ATA CODE & INDEX NO.	PART NO.	DESCRIPTION 1 2 3 4 5 6 7	UNITS PER ASSY	USABLE ON CODE
10-20	50-534846-1	. PLATE INSTL,CONTROL WHEEL FACE/WITHOUT CLOCK/	NP	
- 37	50-534846-11	. . EMBLEM,CONTROL WHEEL /WITHOUT CLOCK/. . . .	1	
		/ATTACHING PARTS/		
- 38	NAS384-6-6P	. . SCREW	2	
		——*——		
- 39	50-534846-9	. . CLIP.	1	
	50-534846-10	. . CLIP.	1	
		/ATTACHING PARTS/		
- 40	PK89XA6-10	. . SCREW	2	
		——*——		
	58-324036-3	CLOCK INSTL,CONTROL WHEEL /8 DAY CLOCK/	NP	
	50-534846-19	. PLATE INSTL,CLOCK /INTERNALLY LIGHTED/. . . .	NP	
- 41	50-534846-21	. . PLATE,CLOCK MOUNTING.	1	
		/ATTACHING PARTS/		
- 42	NAS384-6-6P	. . SCREW	2	
		——*——		
	50-534846-9	. . CLIP.	1	
	50-534846-10	. . CLIP.	1	
		/ATTACHING PARTS/		
	PK89XA6-10	. . SCREW	1	
		——*——		
- 43	58-380015-3	. CLOCK ASSY/8 DAY INTERNALLY LIGHTED/.	1	
		/COILED CORD & CLAMPS FURNISHED AS PART		
		MAP LIGHT INSTL FOR CLOCK/		
		/ATTACHING PARTS/		
- 44	AN515-6R8	. SCREW	2	
	AN960-6	. WASHER.	2	
	MS20364-632	. WASHER.	2	
		——*——		
	96-524017-601	CONTROL COLUMN ASSY	1	
		/ATTACHING PARTS/		
- 45	AN3-16A/M/	BOLT.	2	
- 46	AN3-5A/M/	BOLT.	2	
- 47	35-524007	GUARD	2	
	AN960-10	WASHER.	4	
	MS2104213	NUT	4	
		——*——		
	35-524125-12	. HANGER ASSY,CONTROL COLUMN /ATTACHED TO . . .	1	
		CONSOLE/		
		/ATTACHING PARTS/		
- 48	NAS387-832-12	. SCREW/SUPERSEDES AN507-832R10/.	3	
		——*——		

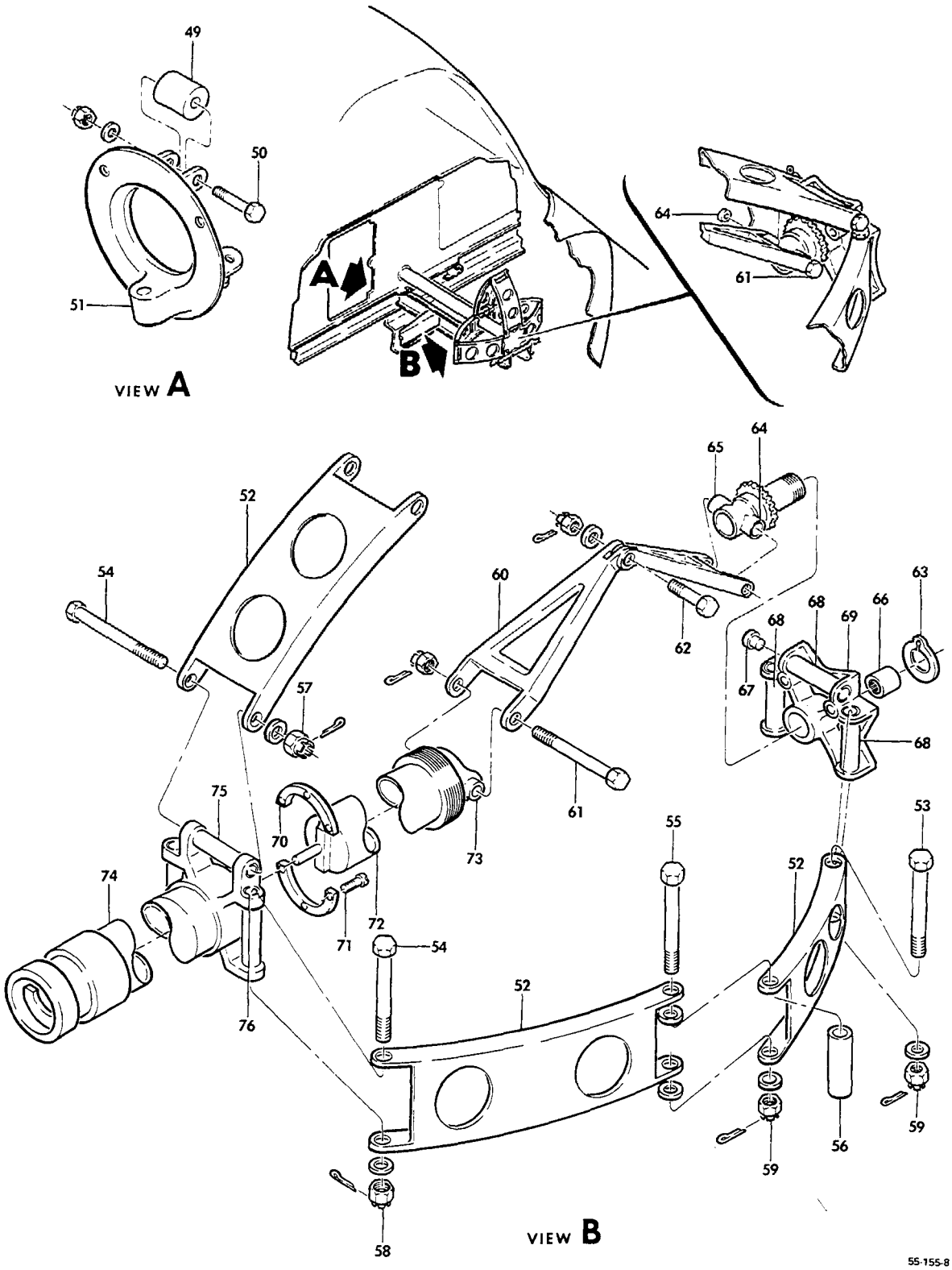

FIGURE 10-20.CONTROL ARM AND CONTROL COLUMN
/SHEET 4 OF 4 SHEETS/

SUB-SECT UNIT & ITEM NO.	PART NO.	DESCRIPTION 1 2 3 4 5 6 7	UNITS PER ASSY	USABLE ON CODE
10-20 - 49	35-524197-4	. . ROLLER ASSEMBLY	3	
		/ATTACHING PARTS/		
- 50	AN3-12A/M/	. . BOLT.	1	
	AN960-10L	. . WASHER.	2	
	MS20365-1032	. . NUT /SUPERSEDES AN365-1032/	1	
		----*----		
- 51	35-524125-10	. . HANGER.	1	
- 52	35-524240	. LINK,CONTROL COLUMN	6	
		/ATTACHING PARTS/		
- 53	NAS53-32/M/	. BOLT.	1	
- 54	35-524269	. BOLT.	1	
- 55	NAS54-33/M/	. BOLT.	1	
- 56	102933D5ZM2452	. SPACER.	1	
	AN960-10	. WASHER.	2	
	AN960-416	. WASHER.	1	
	AN960-416L	. WASHER.	2	
- 57	MS17825-3	. NUT	1	
- 58	35-524349	. NUT,JAM	1	
- 59	MS17825-4	. NUT	1	
	MS24665-132	. PIN,COTTER.	2	
		----*----		
- 60	35-524047	. KNEE,TORQUE	2	
		/ATTACHING PARTS/		
- 61	AN3-26/M/	. BOLT.	1	
- 62	AN24-14/M/	. BOLT.	1	
	AN960-416	. WASHER.	1	
	MS17825-3	. NUT	1	
	MS17826-4	. NUT	1	
		----*----		
	35-524274	. SPROCKET ASSY,CONTROL COLUMN/AILERON CONTROL/	1	
		/ATTACHING PARTS/		
- 63	NAS670-87	. RING,RETAINING /SUPERSEDES NAS51-87/.	1	
		----*----		
- 64	MS27640-3A	. . BEARING	2	
- 65	35-524274-4	. . SPROCKET.	1	
	35-524230	. HANGER ASSY,CONTROL COLUMN.	1	
- 66	B148	. . BEARING	2	
- 67	AN200K32	. . BEARING	6	
- 68	35-524230-2	. . BUSHING	3	
- 69	35-524231	. . FITTING	1	
- 70	35-524038	. WASHER,THRUST	2	
		/ATTACHING PARTS/		
- 71	MS35265-43	. SCREW /SUPERSEDES AN503-8-6/.	3	
		----*----		
- 72	96-524017-27	. TUBE ASSY,CONTROL COLUMN INNER.	1	
- 73	MS27640-3A	. . BEARING /SUPERSEDES AN200K3L/	2	
- 74	96-524017-23	. TUBE ASSY,CONTROL COLUMN OUTER.	1	
- 75	50-524059-4	. . BUSHING	3	
- 76	R MS27640-3A	. . BEARING /SUPERSEDES AN200K3L/	6	

CODES OF EFFECTIVITY

1 TC-1482 THRU TC-1607 2 TC-1 THRU TC-1481
TE-881 THRU TE-937 TE-1 THRU TE-880
TE 939 THRU TE-942

"END"

27-10-30
AILERON TRIM TAB CONTROLS,CONSOLE

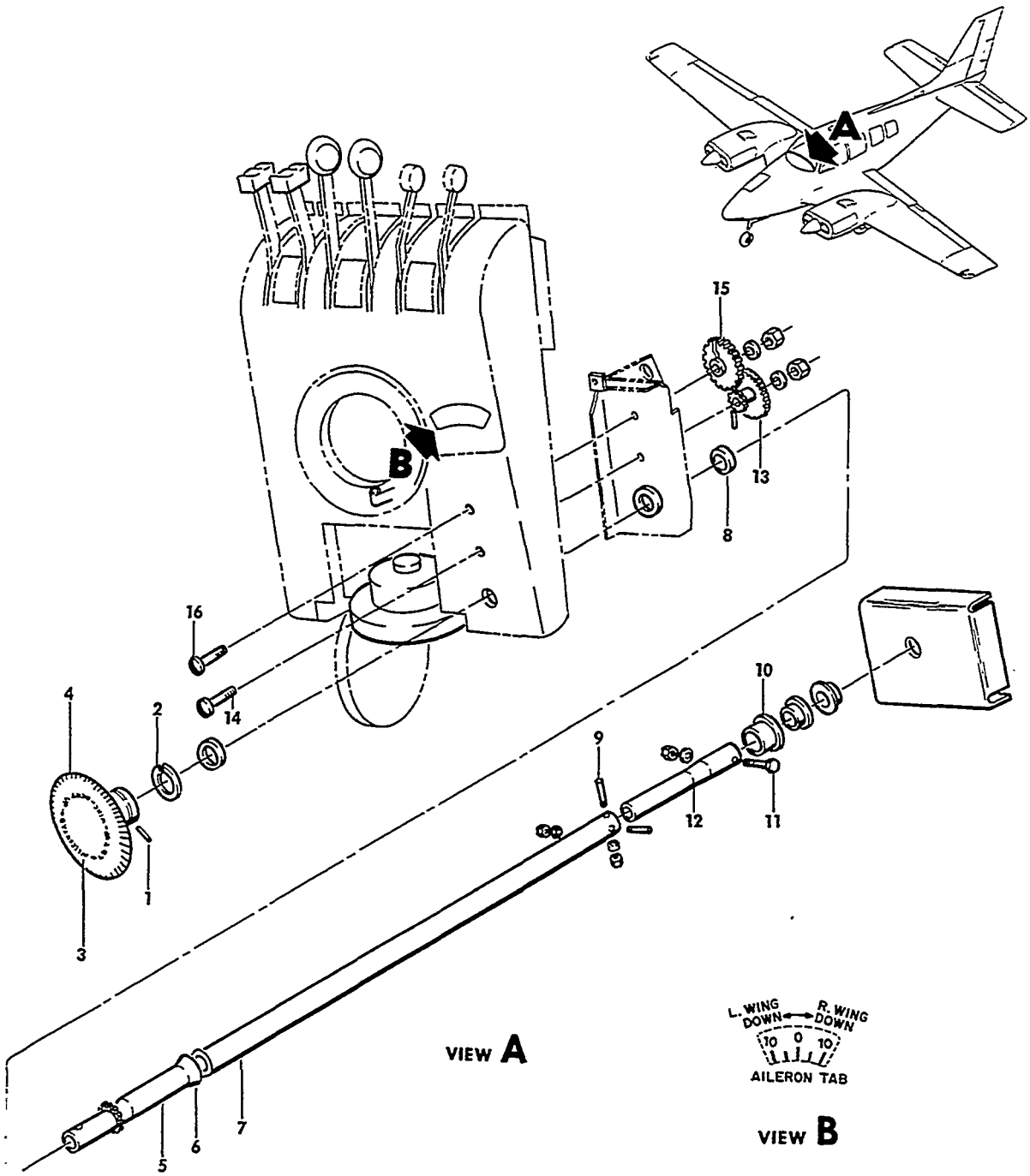

55-158-22

FIGURE 10-30.AILERON TRIM TAB CONTROLS,CONSOLE
/SHEET 1 OF 2 SHEETS/

ATA CODE & INDEX NO.	PART NO.	DESCRIPTION 1 2 3 4 5 6 7	UNITS PER ASSY	USABLE ON CODE
10-30	95-324006-650	CONSOLE ASSY/AILERON TAB CONTROLS/.	1	1
	96-324035-601	CONSOLE ASSY/AILERON TAB CONTROLS/.	1	2
	96-324055	CONSOLE ASSY/AILERON TAB CONTROLS/.	1	3
	58-324025-605	CONSOLE ASSY/AILERON TAB CONTROLS/.	1	4
		NOTE THIS IS NOT A COMPLETE CONSOLE ASSY. THIS FIGURE LISTS ONLY THOSE PARTS APPLICABLE TO AILERON TAB CONTROLS AT THE CONSOLE		
	50-524124	. KNOB ASSY,AILERON TAB CONTROL	1	
		/ATTACHING PARTS/		
- 1	102809-124-025	. PIN	1	
- 2	NAS51-87	. RING,SNAP	1	
		——*——		
- 3	50-524128-1	. . PLACARD	1	
- 4	50-524124-4	. . KNOB ASSY,AILERON TAB CONTROL	1	
	50-524124-2	. . . KNOB.	1	
	50-524125	. . . INSERT.	1	
	95-324006-71	. SHAFT ASSY,AILERON TAB CONTROL.	1	
- 5	95-324006-267	. . SHAFT & GEAR ASSY,WELDED.	1	
- 6	50-524039-4	. . UNIVERSAL JOINT	1	
- 7	95-324006-73	. . SHAFT	1	
- 8	1006960-YG006	. SPACER.	1	
	95-524023-7	. SHAFT & SPROCKET ASSY,AILERON TAB CONTROL . .	1	
		/ATTACHING PARTS/		
- 9	187714-1	. PIN,TAPER	2	
	AN960-4	. WASHER.	2	
	MS20365-440	. NUT	2	
		——*——		
- 10	95-524023-1	. . SPROCKET.	1	
		/ATTACHING PARTS/		
- 11	AN3-7A/M/	. . BOLT.	1	
	AN960-10L	. . WASHER.	1	
	MS20364-1032	. . NUT	1	
		——*——		
- 12	95-524023-3	. . TUBE,AILERON TAB DRIVE.	1	
- 13	50-524041	. GEAR ASSY,AILERON TAB INDICATOR DRIVE	1	
		/ATTACHING PARTS/		
- 14	AN509-10R28	. SCREW	1	
	AN960-10	. WASHER.	1	
	MS20365-1032	. NUT	1	
		——*——		
- 15	50-524040-8	. INDICATOR ASSY,TAB.	1	
		/ATTACHING PARTS/		
- 16	AN509-10R28	. SCREW	1	
	AN960-10	. WASHER.	1	
	MS20365-1032	. NUT	1	
		——*——		

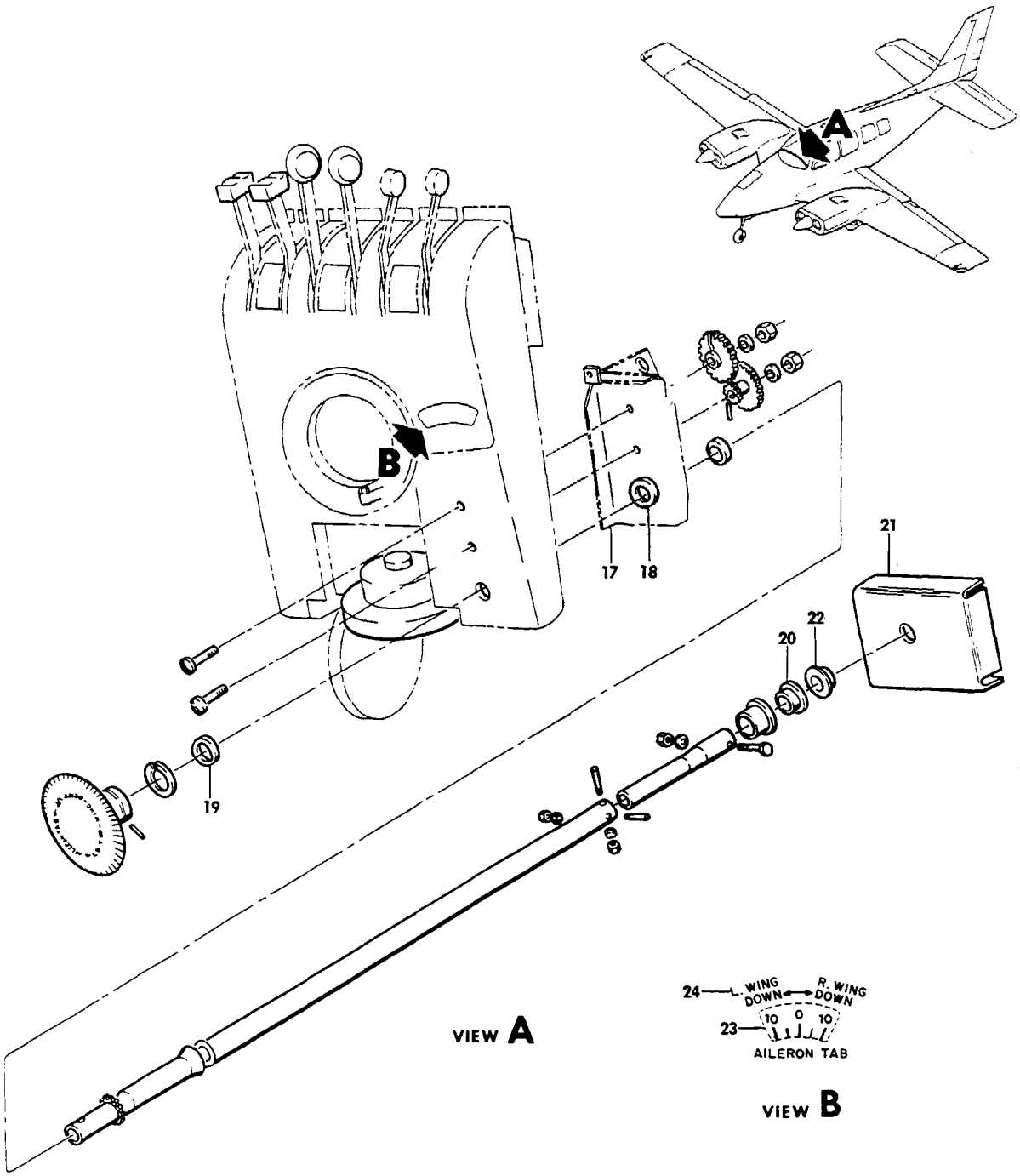

FIGURE 10-30. AILERON TRIM TAB CONTROLS, CONSOLE
/SHEET 2 OF 2 SHEETS/

ATA CODE & INDEX NO.	PART NO.	DESCRIPTION 1 2 3 4 5 6 7	UNITS PER ASSY	USABLE ON CODE
10-30	50-320029	. SUPPORT ASSY,AILERON TAB CONTROL & INDICATOR.	1	5
	96-324055-115	. SUPPORT ASSY,AILERON TAB CONTROL & INDICATOR.	1	6
- 17	50-320029-2	. . SUPPORT	1	5
	96-324055-117	. . SUPPORT	1	6
	50-320029-4	. . BRACKET	1	6
- 18	50-320137	. . BEARING,CONTROL SHAFT SUPPORT	1	
- 19	50-320137	. BEARING,SHELL ASSY.	1	
- 20	100696D-YP006	. SPACER.	1	
	95-324006-604	. BRACKET ASSY.	1	
- 21	95-324006-65	. . BRACKET	1	
- 22	50-320032	. . BEARING	1	
- 23	96-324036-604	. GLASS,AILERON TAB INDICATOR	1	7
	96-324040	. . PLACARD	1	7
- 24	96-324042	. PLACARD,AILERON TAB	1	7

CODES OF EFFECTIVITY

1 TC-1 THRU TC-190
2 TC-191 THRU TC-1607 EXCEPT TC-350
3 TE-1 THRU TE-767 AND TC-350
4 TE-768 THRU TE-942 EXCEPT TE-938
5 TC-1 THRU TC-1607 TE-1 THRU TE-197
6 TE-198 THRU TE-942 EXCEPT TE-938
7 TC-191 THRU TC-1607 TE-1 THRU TE-942 EXCEPT TE-938

"END"

27-20-01
RUDDER & RUDDER TAB CONTROLS

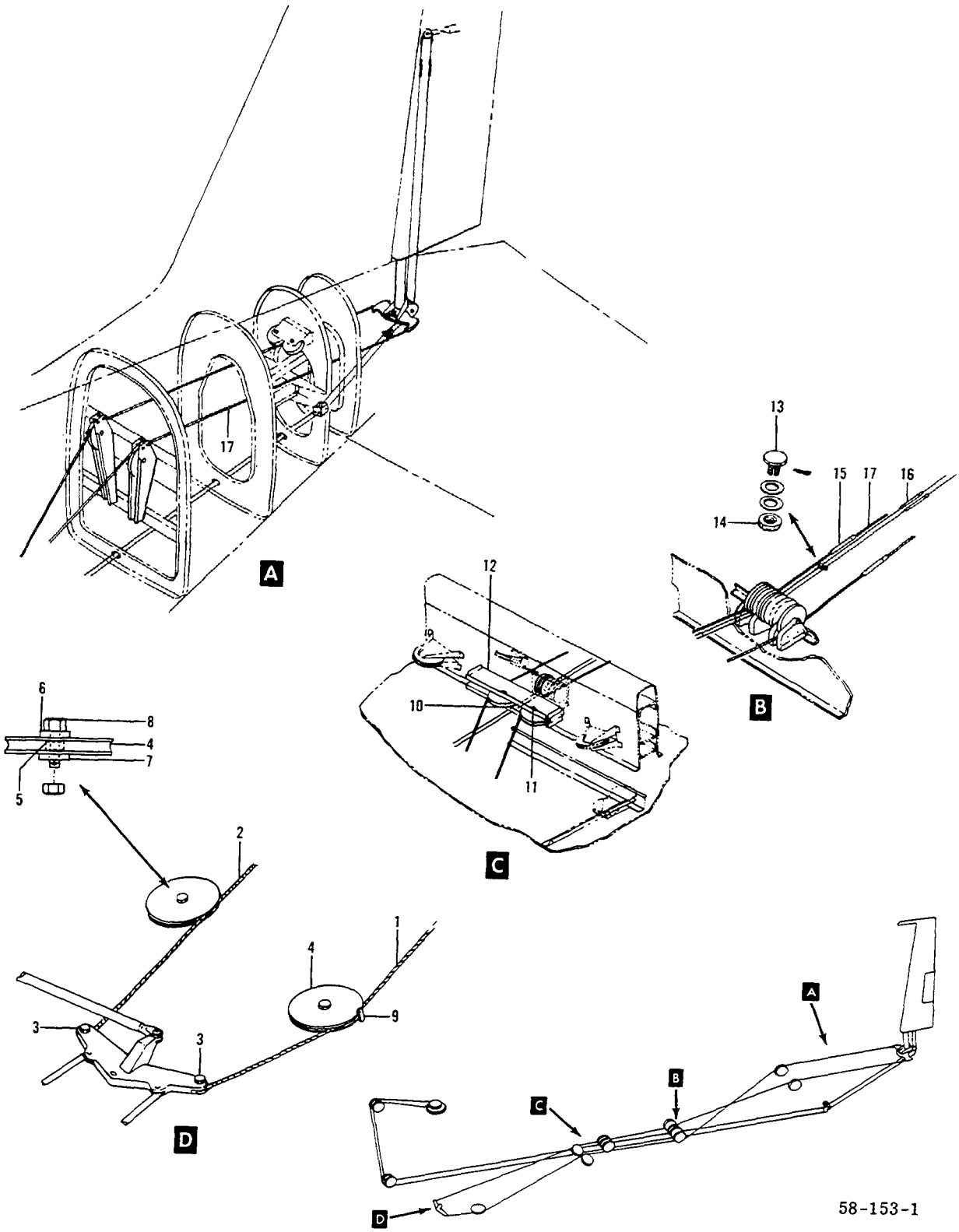

FIGURE 20-01.RUDDER & RUDDER TAB CONTROLS
/SHEET 1 OF 2 SHEETS/

SUB-SECT UNIT & ITEM NO.	PART NO.	DESCRIPTION 1 2 3 4 5 6 7	UNITS PER ASSY	USABLE ON CODE
20-01	96-524000	CONTROLS INSTL,RUDDER FUSELAGE FLIGHT	NP	1
	96-524000-33	CONTROLS INSTL,RUDDER FUSELAGE FLIGHT	NP	2
- 1	R NAS305-34-1600	. CABLE ASSY,RUDDER LH/FWD/	1	
- 2	R NAS305-34-1594	. CABLE ASSY,RUDDER RH/FWD/	1	
		/ATTACHING PARTS/		
- 3	AN24-14/M/	. BOLT.	1	
	AN960-416	. WASHER.	1	
	AN320-4	. NUT	1	
	MS24665-132	. PIN,COTTER.	1	
		----*----		
- 4	130000BEP4	. PULLEY,RUDDER CABLE/F.S.68.00/.	2	
		/ATTACHING PARTS/		
- 5	130001BB2	. BUSHING,PLAIN BEARING	1	
- 6	105739S-XU0312	. SPACER,UPPER LH PULLEY.	1	
- 7	105739S-XU0187	. SPACER,LOWER LH PULLEY.	1	
	AN4-10A/M/	. BOLT,RH PULLEY BRACKET.	1	
- 8	NAS222-25	. BOLT,LH PULLEY BRACKET.	1	
	AN960-416	. WASHER.	1	
	MS20365-428	. NUT	1	
		----*----		
- 9	NAS427K11	. PIN,CABLE RETAINING LH.	1	
	AN392-35	. PIN,CABLE RETAINING RH.	1	
		/ATTACHING PARTS/		
	MS24665-132	. PIN,COTTER.	1	
		----*----		
- 10	130000BEP4	. PULLEY,RUDDER CABLE/F.S.118.50/	2	
		/ATTACHING PARTS/		
	130001BB2	. BEARING	1	
- 11	AN4-10A/M/	. BOLT.	1	
	AN960-416	. WASHER.	1	
	MS20365-428	. NUT	1	
		----*----		
- 12	MS20392-1C23	. PIN,CABLE RETAINING	2	
		/ATTACHING PARTS/		
	MS24665-132	. PIN,COTTER.	1	
		----*----		
- 13	45-524624	. STOP,RUDDER TAB CABLE	2	
		/ATTACHING PARTS/		
- 14	MS20365-524	. NUT	1	
	AN960D516L	. WASHER.	2	
		----*----		
- 15	MS2125185L	. BARREL,RUDDER CABLE TURNBUCKLE.	2	
- 16	MS2125182L	. BARREL,RUDDER TAB CABLE TURNBUCKLE.	2	
	MS21256-2	. CLIP,LOCKING/TURNBUCKLE BARREL/	1	
- 17	96-524000-29	. CABLE ASSY,AFT RUDDER	2	

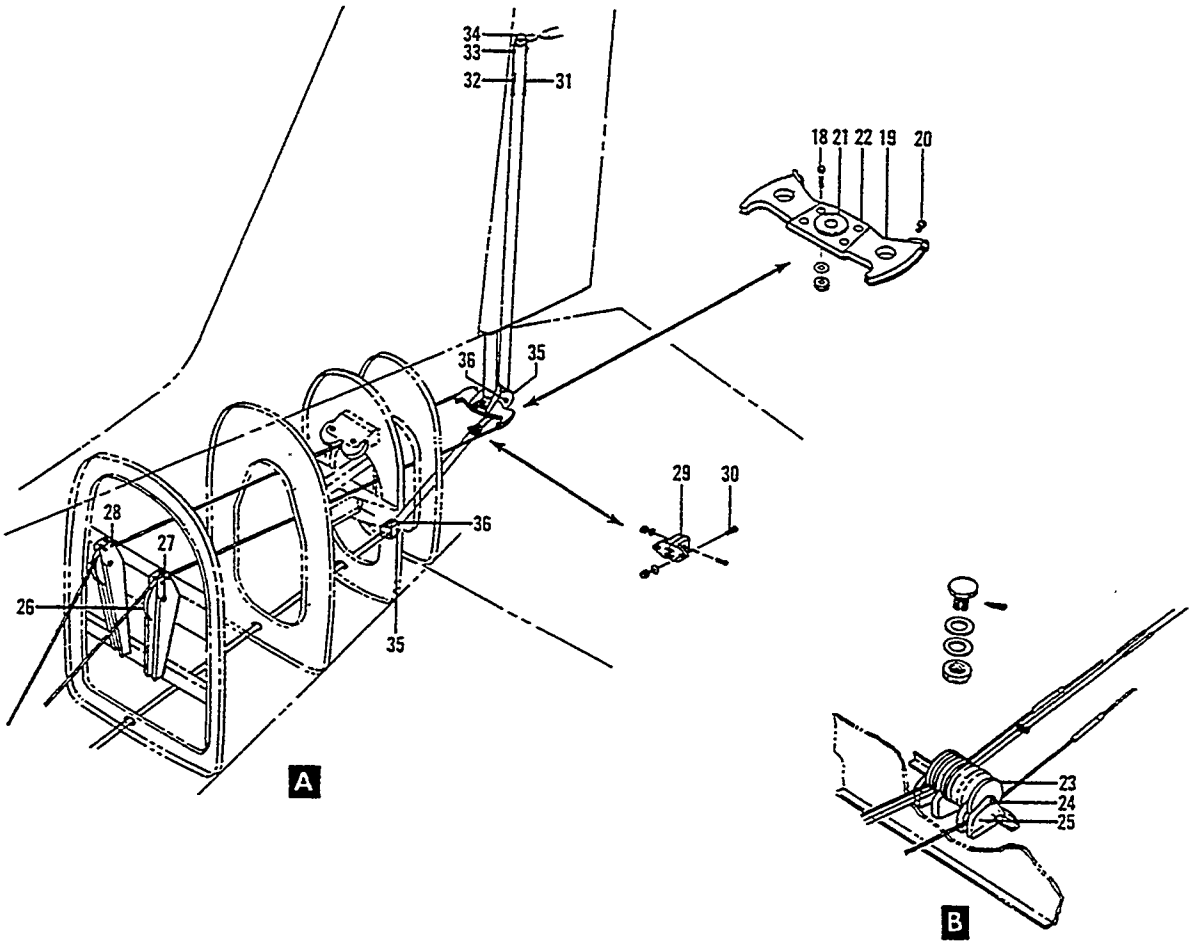

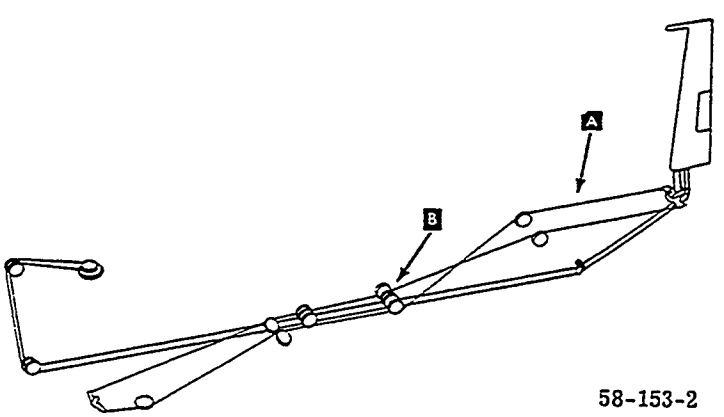

58-153-2

FIGURE 20-01. RUDDER & RUDDER TAB CONTROLS
/SHEET 2 OF 2 SHEETS/

SUB-SECT UNIT & ITEM NO.	PART NO.	DESCRIPTION 1 2 3 4 5 6 7	UNITS PER ASSY	USABLE ON CODE
20-01	96-524013	. BELLCRANK ASSY,RUDDER	1	
		/ATTACHING PARTS/		
- 18	R 130909B192	. BOLT.	4	
	R AN960-10	. WASHER/2 UNDER NUT/	8	
	R 130909N49	. NUT	4	
		----*----		
- 19	96-524013-1	. . BELLCRANK,RUDDER.	1	
- 20	AN502-10-10	. . SCREW,RUDDER BELLCRANK.	2	
- 21	AN200KS6	. . BEARING,RUDDER BELLCRANK.	1	
- 22	96-600000-3	. SHIM,RUDDER BELLCRANK	2	
- 23	R 130000BEP3	. PULLEY,RUDDER CABLE/F.S.153.00 APROX/	2	
		/ATTACHING PARTS/		
	130001BB2	. BEARING	1	
	105739S-XU0484	. SPACER.	1	
- 24	AN4-54A	. BOLT.	1	
	AN960-416	. WASHER.	1	
	MS20365-428	. NUT	1	
		----*----		
- 25	35-524003	. PIN,PULLEY RETAINING.	1	
		/ATTACHING PARTS/		
	MS24665-132	. PIN,COTTER.	1	
		----*----		
- 26	130000BEP4	. PULLEY,RUDDER CABLE/F.S.170.00,179.00	4	
		& 233.55 APROX/		
		/ATTACHING PARTS/		
	R 130001BB2	. BEARING	1	
- 27	AN4-10A/M/	. BOLT.	1	
	AN960-416	. WASHER.	1	
	MS20365-428	. NUT	1	
		----*----		
- 28	NAS427K11	. PIN,CABLE RETAINING	5	
- 29	35-660033	. FAIRLEAD,RUDDER TAB CONTROL CABLE	2	
		/ATTACHING PARTS/		
- 30	AN3-7A/M/	. BOLT.	3	
	AN960-10	. WASHER.	3	
	MS20365-1032	. NUT	3	
		----*----		
- 31	96-524000-5	. CHAIN & CABLE ASSY,AFT RUDDER TAB	1	
	96-524000-13	. . CABLE,RUDDER TAB.	1	
	96-524000-15	. . CABLE,RUDDER TAB.	1	
- 32	NAS287-25-2	. . TERMINAL,LH	1	
	MS21260S2RH	. . TERMINAL,RH	1	
- 33	4189	. . LINK,MASTER	2	
- 34	96-524000-31	. . CHAIN,RUDDER TAB.	1	
- 35	118540BHP1	. PULLEY,RUDDER TAB CABLE	4	
		/ATTACHING PARTS/		
- 36	AN3-11A/M/	. BOLT.	1	
	AN960-10	. WASHER.	1	
	MS20365-1032	. NUT	1	
		----*----		
	NAS427K12	. PIN,PULLEY GUARD.	2	
	95-524018-37	. RUDDER PEDAL INSTL/SEE CHAPTER 27-20-20/.	NP	
	95-324006-67	BRACKET,PULLEY/CONSOLE RUDDER CONTROL/UPPER	1	
	95-420011-61	BRACKET ASSY,PULLEY/CONSOLE RUDDER CONTROL/LWR.	1	
	95-524000-55	BRACKET ASSY,RUDDER CONTROL/F.S. 68.00/	1	
	35-410158-16	BRACKET,RUDDER CONTROL/FWD REAR SPAR/	1	
	95-524000-1	BRACKET,RUDDER TAB CONTROL/AFT REAR SPAR/	1	
	35-410015	BRACKET,PULLEY LH/F.S. 151.00/.	1	
	35-410015-1	BRACKET,PULLEY RH/F.S. 151.00/.	1	

CODES OF EFFECTIVITY

1 TC-1 THRU TC-1607 EXCEPT TC-350

2 TC-350 & TE-1 THRU TE-942 EXCEPT TE-938

"END"

27-20-10
ACTUATOR ASSY,RUDDER TRIM TAB

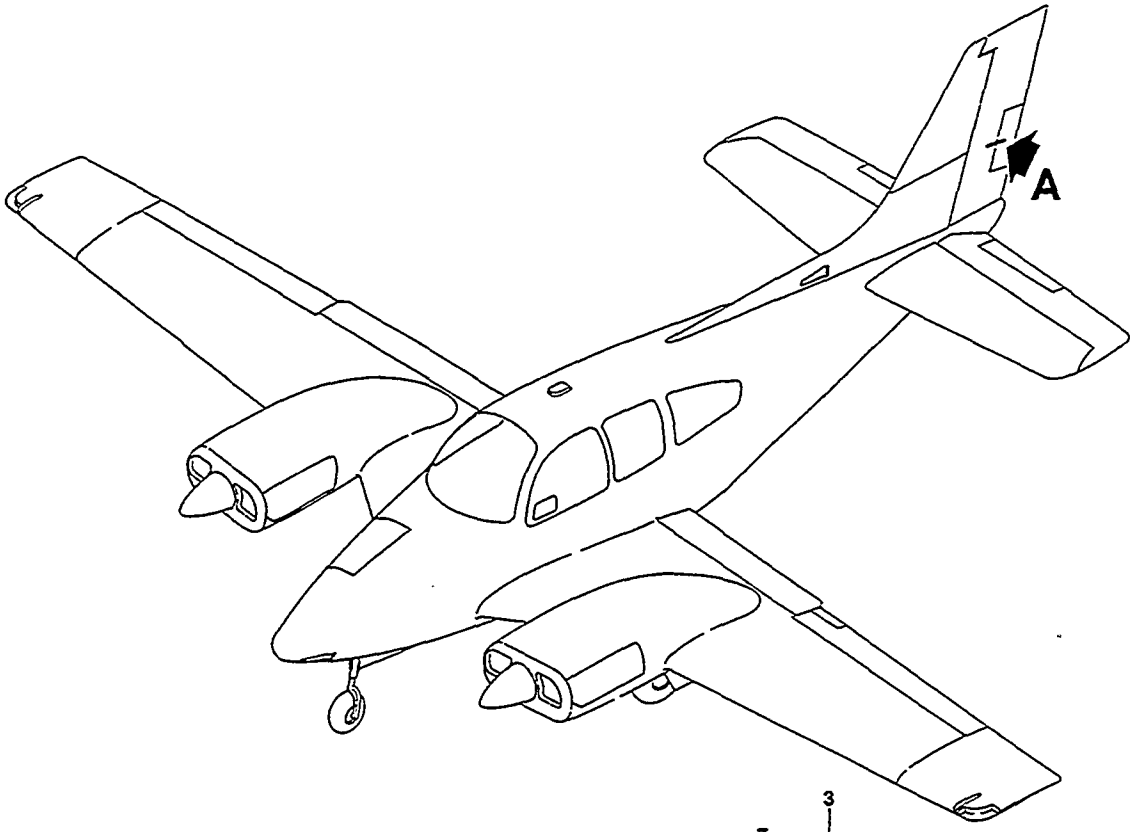

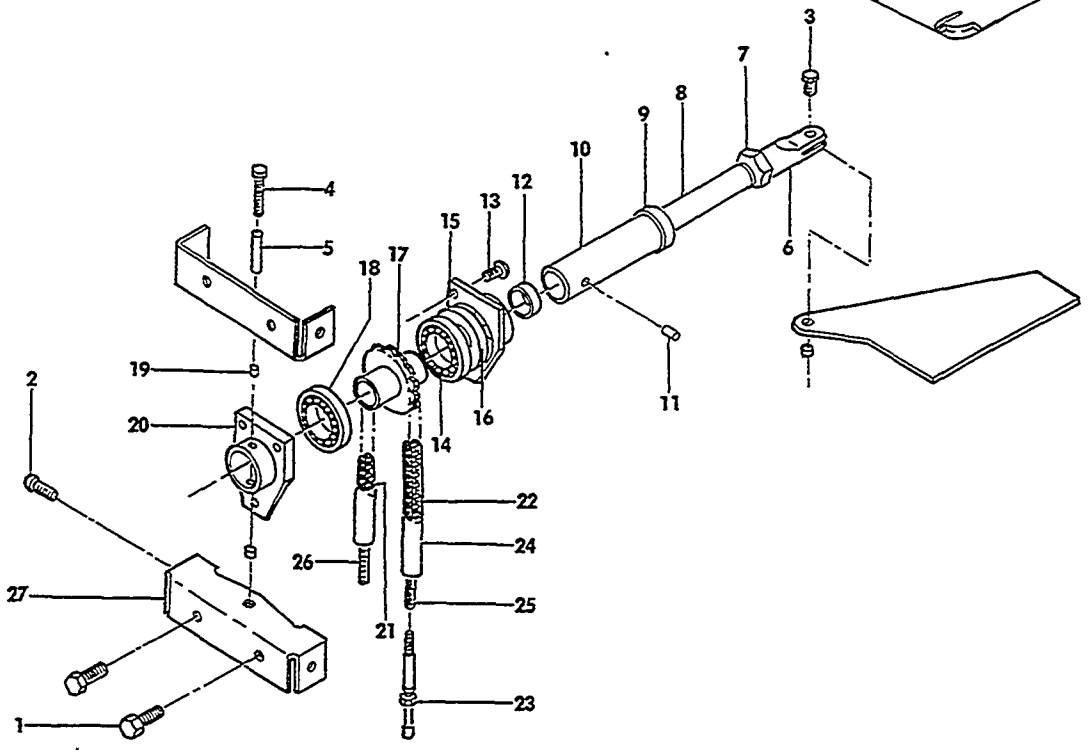

VIEW A

B-55-163-2

FIGURE 20-10.ACTUATOR ASSY,RUDDER TRIM TAB

SUB-SECT UNIT & ITEM NO.	PART NO.	DESCRIPTION 1 2 3 4 5 6 7	UNITS PER ASSY	USABLE ON CODE
20-10	96-526000	ACTUATOR ASSEMBLY,RUDDER TRIM TAB	1	
		/ATTACHING PARTS/		
- 1	AN3-4/M/	BOLT.	4	
- 2	AN525-10R8	SCREW	4	
- 3	AN173-5/M/	BOLT,ACTUATOR TO TAB.	1	
	AN960-10L	WASHER.	1	
	AN320-3	NUT	1	
	MS24665-132	PIN,COTTER.	1	
	96-526000-601	. ACTUATOR ASSY,RUDDER TRIM TAB	1	
		/ATTACHING PARTS/		
- 4	AN173-13/M/	. BOLT.	1	
- 5	96-526000-25	. BUSHING	1	
	AN320-3	. NUT	1	
	MS24665-132	. PIN,COTTER.	1	
- 6	96-526000-3	. . CLEVIS.	1	
- 7	AN316-6R	. . NUT,LOCK.	1	
- 8	96-526000-5	. . SCREW,ACTUATOR.	1	
- 9	96-526000-7	. . COLLAR.	1	
- 10	96-526000-9	. . TUBE,ACTUATOR	1	
		/ATTACHING PARTS/		
- 11	MS171500	. . PIN,ROLL /SUPERSEDES 79-022-094-0750/	2	
- 12	105740X-YE0562	. . SPACER.	1	
	96-526000-13	. . HOUSING ASSY.	1	
		/ATTACHING PARTS/		
- 13	MS35266-63	. . SCREW/SUPERSEDES AN501A10-8/.	3	
- 14	MS20201KP6A	. . . BEARING	1	
- 15	96-526000-11	. . . HOUSING	1	
- 16	60-526013-1	. . SHIM,SPROCKET END PLAY.	1	
- 17	95-524022-5	. . SPROCKET.	1	
	96-526000-17	. . HOUSING ASSY.	1	
- 18	MS20201KP3A	. . . BEARING	1	
- 19	AA397-1	. . . BUSHING,SLEEVE.	2	
- 20	96-526000-15	. . . HOUSING	1	
	96-524000-5	. . CABLE ASSY,RUDDER TAB	1	
- 21	C4189	. . . LINK,MASTER	2	
- 22	96-524000-31	. . . CHAIN /27.25 IN./	1	
- 23	MS21260S2RH	. . . TERMINAL.	2	
- 24	NAS287-25-2	. . . TERMINAL,CHAIN TO CABLE	2	
- 25	96-524000-13	. . . CABLE /86.85 IN./	1	
- 26	96-524000-15	. . . CABLE /86.85 IN./	1	
	131052-1	. . PLACARD	1	
	96-526000-29	. BRACKET ASSY.	2	
- 27	96-526000-19	. . BRACKET	1	
	MK3000-08	. . NUTPLATE.	2	
	R 96-630000-43	. HORN ASSY	1	
	R 105740X-ZH0115	. . BUSHING	1	

27-20-15
RUDDER TRIM TAB CONTROLS,CONSOLE

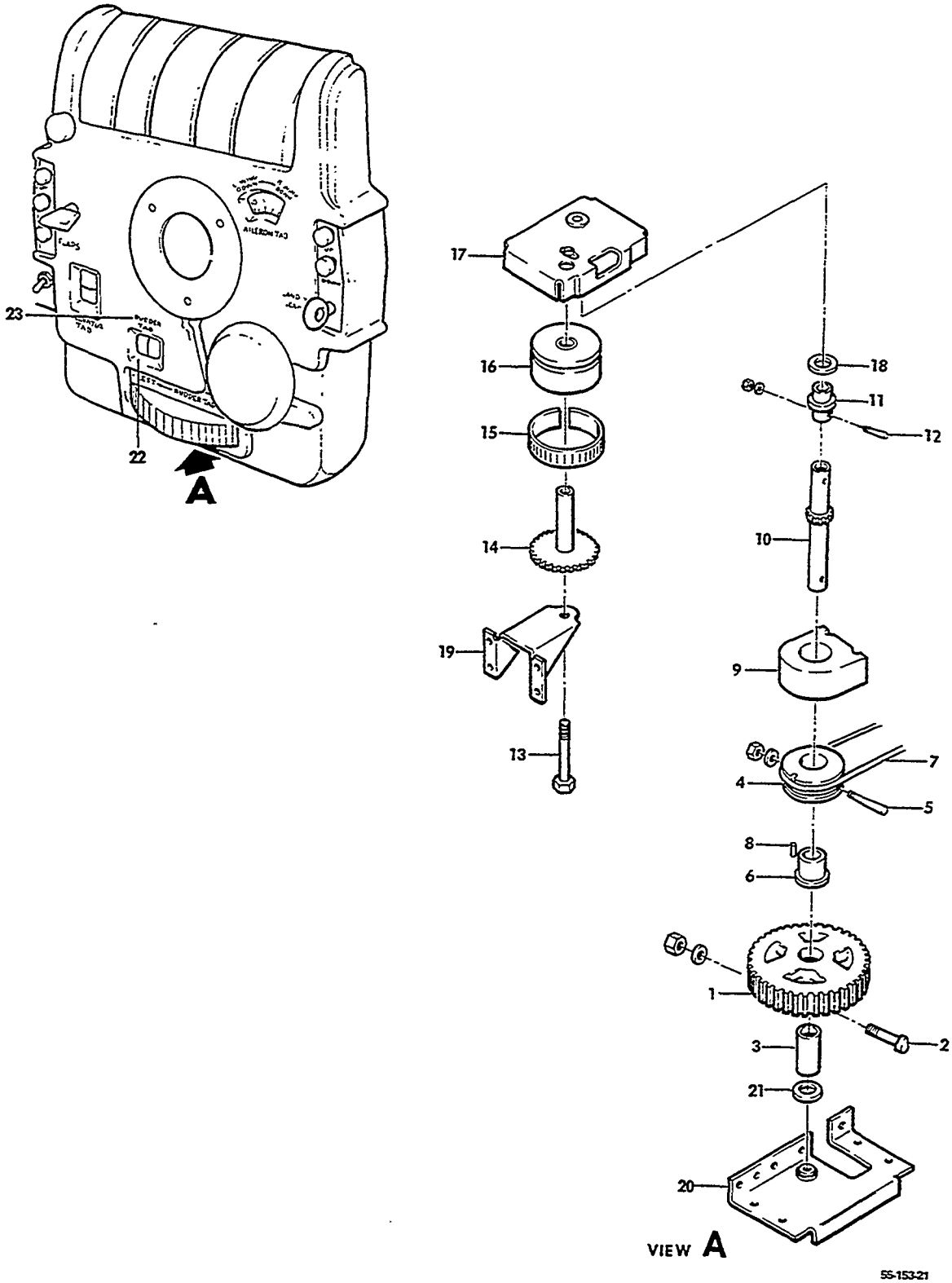

FIGURE 20-15. RUDDER TRIM TAB CONTROLS, CONSOLE

ATA CODE & INDEX NO.	PART NO.	DESCRIPTION 1 2 3 4 5 6 7	UNITS PER ASSY	USABLE ON CODE
20-15	95-324006-650	CONSOLE ASSY,RUDDER TAB CONTROLS.	1	1
	96-324035-601	CONSOLE ASSY,RUDDER TAB CONTROLS.	1	2
	96-324055	CONSOLE ASSY,RUDDER TRIM TAB CONTROLS	1	3
	58-324025-605	CONSOLE ASSY,RUDDER TRIM TAB CONTROLS	1	4
		NOTE THIS IS NOT A COMPLETE CONSOLE ASSY. THIS FIGURE LISTS ONLY THOSE PARTS APPLICABLE TO RUDDER TAB CONTROLS AT THE CONSOLE.		
	95-324006-227	. DRIVE ASSY,RUDDER TAB CONTROLS.	1	
- 1	50-524138	. . WHEEL ASSY,RUDDER TAB CONTROL	1	
		/ATTACHING PARTS/		
- 2	AN173-16A/M/	. . BOLT.	1	
- 3	50-524043-8	. . BUSHING	1	
	AN960-10	. . WASHER.	1	
	MS20365-1032	. . NUT	1	
		----*----		
- 4	45-524539-3	. . DRUM ASSY,RUDDER TAB CABLE.	1	
		/ATTACHING PARTS/		
- 5	35-524584	. . PIN,TAPERED	1	
	AN975-3	. . WASHER.	1	
	MS20364-1032	. . NUT	1	
		----*----		
	50-524471-1	. . . DRUM.	1	
- 6	45-524538	. . . BUSHING,DRUM.	1	
- 7	NAS302-77-3827	. . CABLE ASSY,RUDDER TAB	1	
		/ATTACHING PARTS/		
- 8	35-524028	. . PIN,CABLE RETAINING	1	
		----*----		
- 9	50-524047	. . GUARD,CABLE	1	
- 10	50-524043-10	. . SHAFT ASSY,RUDDER TAB WHEEL	1	
- 11	50-524038	. ADAPTER ASSY,RUDDER TAB SHAFT	1	
		/ATTACHING PARTS/		
- 12	187714-3	. PIN,TAPERED	1	
	AN960-10	. WASHER.	1	
	MS20365-632	. NUT	1	
		----*----		
	95-524031-1	. INDICATOR ASSY,RUDDER TAB	1	
		/ATTACHING PARTS/		
- 13	AN3-24A/M/	. BOLT.	1	
	AN960-10L	. WASHER.	1	
	MS20365-1032	. NUT	1	
		----*----		
- 14	50-524042-8	. . GEAR ASSY,RUDDER TAB INDICATOR.	1	
- 15	96-524014	. . PLACARD,RUDDER TAB INDICATOR.	1	
- 16	50-524042-2	. . DRUM,RUDDER TAB INDICATOR	1	
- 17	50-320034	. SUPPORT ASSY,RUDDER TAB CONTROL	1	
- 18	50-320046	. . BEARING,RUDDER TAB SHAFT.	1	
- 19	50-320033	. BRACKET,RUDDER TAB INDICATOR.	1	
	50-320242	. CHANNEL ASSY.	1	
- 20	50-320242-1	. . CHANNEL	1	
- 21	50-320032	. . BEARING	1	
- 22	96-324036-603	. GLASS,RUDDER TAB INDICATOR.	1	5
	96-324041	. . PLACARD	1	5
- 23	96-324044	. PLACARD,RUDDER TAB INDICATOR.	1	5

CODES OF EFFECTIVITY

1 TC-1 THRU TC-190
2 TC-191 THRU TC-1607 EXCEPT TC-350
3 TE-1 THRU TE-767 AND TC-350
4 TE-768 THRU TE-942 EXCEPT TE-938
5 TC-191 THRU TC-1607 TE-1 THRU TE-942 EXCEPT TE-938

"END"

27-20-20
RUDDER PEDALS AND LINKAGE

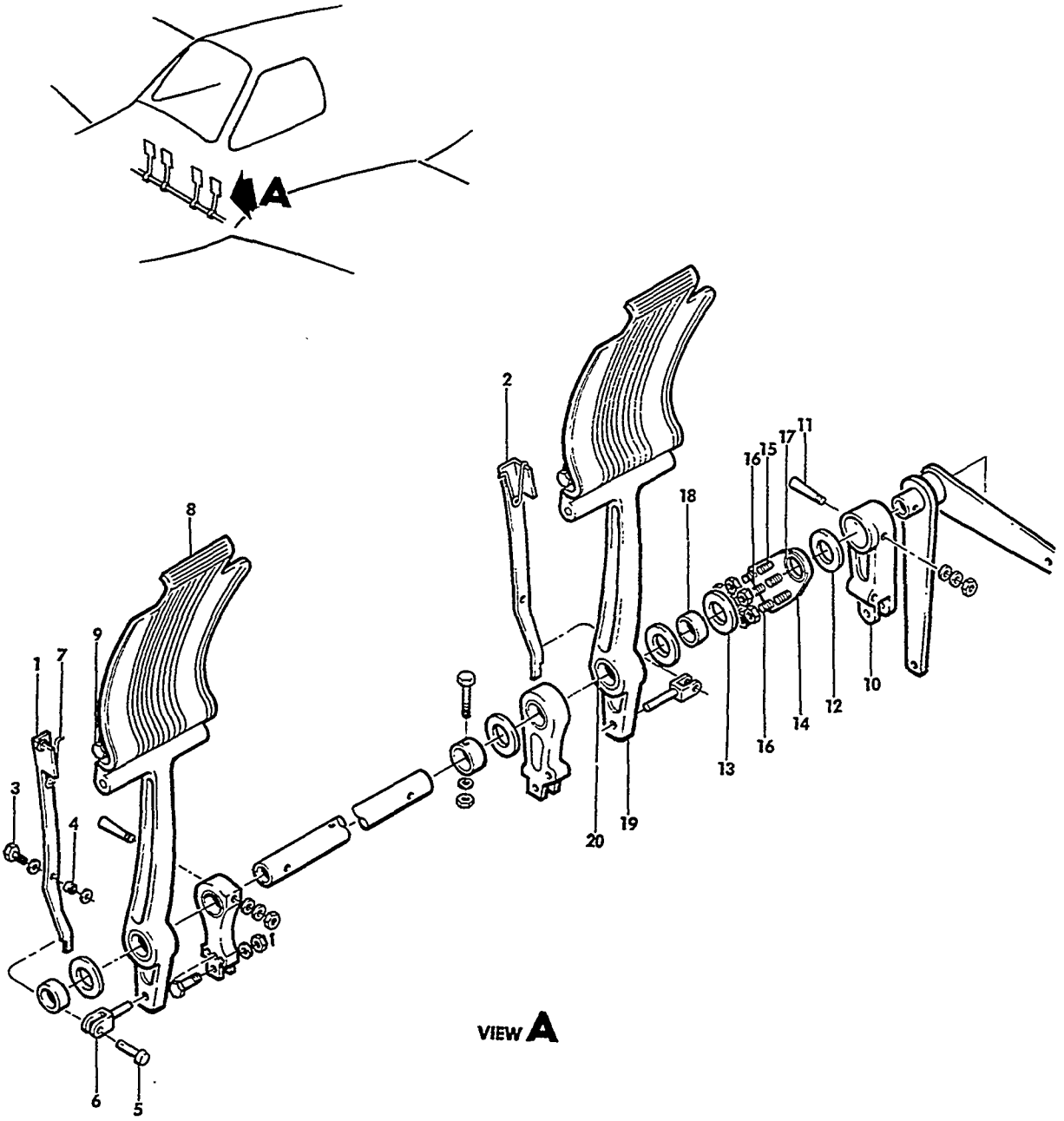

55-154 -17

FIGURE 20-20. RUDDER PEDALS AND LINKAGE
/SHEET 1 OF 4 SHEETS/

ATA CODE & INDEX NO.	PART NO.	DESCRIPTION 1 2 3 4 5 6 7	UNITS PER ASSY	USABLE ON CODE
20-20	95-524018-29	PEDAL INSTL,RUDDER.	NP	1
	95-524018-37	PEDAL INSTL,RUDDER.	NP	2
	95-524018-604	. PEDAL ASSY,PILOTS	1	1
	95-524018-609	. PEDAL ASSY,PILOTS	1	2
	50-524328-1	. . LEVER,LH PEDAL ADJUSTING.	1	3
- 1	35-524666-1	. . LEVER,LH PEDAL ADJUSTING.	1	4
	50-524328-2	. . LEVER,RH PEDAL ADJUSTING.	1	3
- 2	35-524666-2	. . LEVER,RH PEDAL ADJUSTING.	1	4
		/ATTACHING PARTS/		
- 3	AN502-10-6	. . SCREW	1	
	AN960-10L	. . WASHER.	1	
- 4	105739X-ZN0135	. . BUSHING	1	
		——+——		
	35-524665	. . PIN ASSY.	1	
- 5	102809A125-014	. . . PIN	1	
- 6	35-524171	. . . PIN,RUDDER PEDAL ADJUSTING.	1	
- 7	35-524308	. . SPRING.	2	
- 8	35-524011	. . PEDAL,PILOT RUDDER AND BRAKE CONTROL.	2	
		/ATTACHING PARTS/		
- 9	AN3-10	. . BOLT.	2	
	AN960-10	. . WASHER.	2	
	AN310-3	. . NUT	2	
	MS24665-132	. . PIN,COTTER.	2	
		——+——		
	95-524018-23	. . ARM ASSY,NOSE STEERING.	1	1
- 10	35-825054-5	. . . ARM,NOSE STEERING	1	1
	95-524018-25	. . . BUSHING	1	1
	60-820031-11	. . ARM,NOSE STEERING	1	2
		/ATTACHING PARTS/		
- 11	AN386-2-12A	. . PIN,TAPERED THREADED.	1	
	AN960-416L	. . WASHER.	1	
	AN975-3	. . WASHER,LOCK	1	
	MS20364-1032	. . NUT	1	
		——+——		
- 12	95-524018-39	. . BUSHING	1	2
- 13	95-524018-35	. . SPACER.	AR	1
- 14	35-524183-2	. . SUPPORT ASSY,INBD	1	
		/ATTACHING PARTS/		
- 15	35-524275	. . SCREW	4	
- 16	35-524275-1	. . SCREW	2	
	AN960-10	. . WASHER.	6	
	MS20365-1032	. . NUT	4	
	MS20364-1032	. . NUT	2	
		——+——		
- 17	B148	. . BEARING	1	
- 18	95-524018-19	. . BUSHING	1	
	95-524018-17	. . ARM ASSY,PILOTS RUDDER PEDAL RH	1	
- 19	50-524326-4	. . . ARM,PILOTS RUDDER PEDAL RH.	1	
- 20	B1416	. . . BEARING	1	

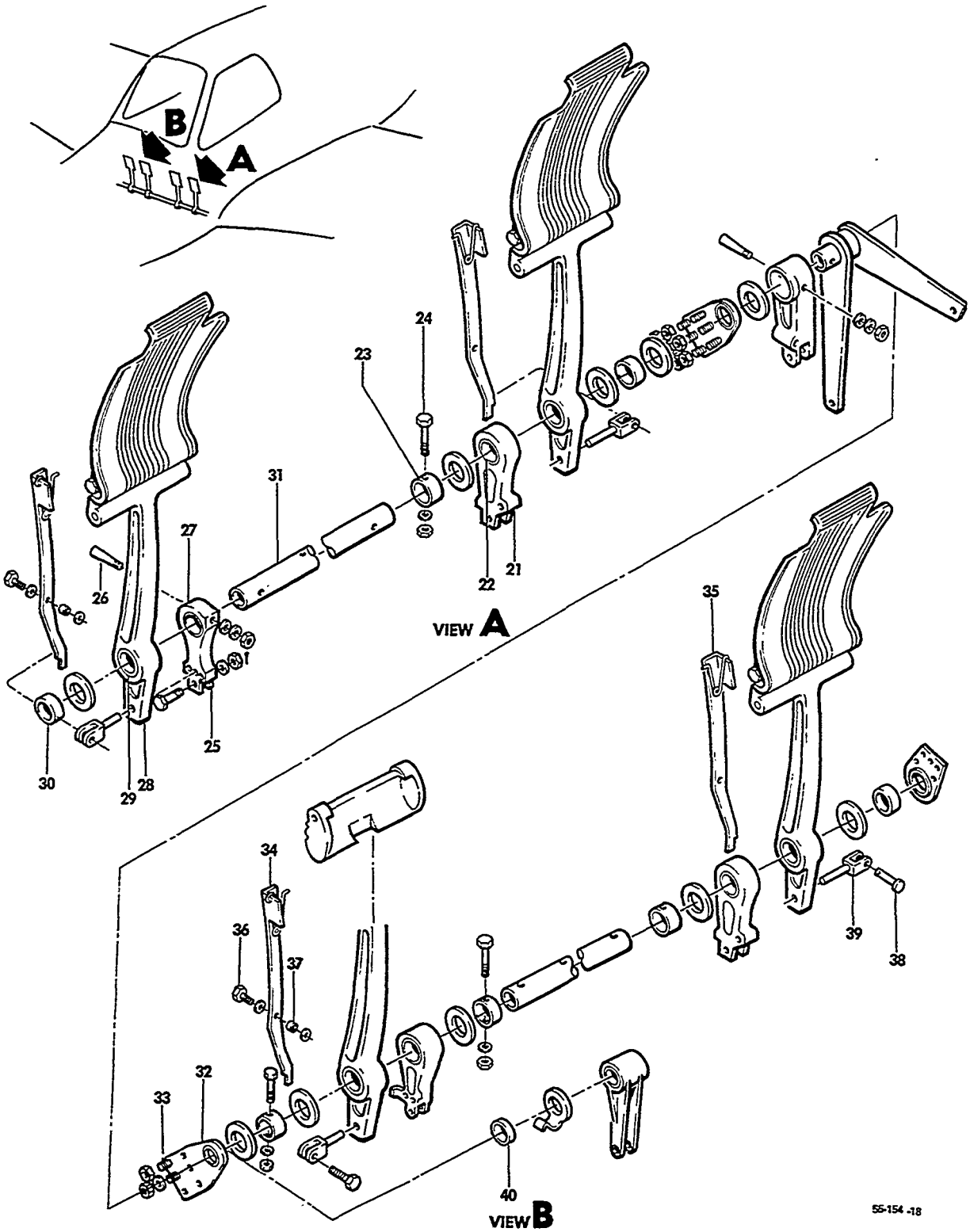

FIGURE 20-20.RUDDER PEDALS AND LINKAGE
/SHEET 2 OF 4 SHEETS/

ATA CODE & INDEX NO.	PART NO.	DESCRIPTION 1 2 3 4 5 6 7	UNITS PER ASSY	USABLE ON CODE
20-20 - 21	35-524143-2	. . ARM,PILOTS LOWER RUDDER PEDAL RH.	1	
- 22	B146	. . BEARING	1	
	B148	. . BEARING	1	
- 23	95-524018-13	. . BUSHING	1	
		/ATTACHING PARTS/		
- 24	AN3-14A	. . BOLT.	1	
	AN960-10	. . WASHER.	1	
	MS20365-1032	. . NUT	1	
- 25	35-524300	. . ARM,PILOTS RUDDER PEDAL LOWER LH.	1	
		/ATTACHING PARTS/		
- 26	AN386-2-12A	. . PIN,TAPERED THREADED.	1	
	AN960-416L	. . WASHER.	1	
	AN975-3	. . WASHER,LOCK	1	
	MS20364-1032	. . NUT	1	
- 27	95-524018-11	. . BUSHING	1	
	95-524018-5	. . ARM ASSY,PILOTS RUDDER PEDAL LH	1	
- 28	50-524326-3	. . . ARM,PILOTS RUDDER PEDAL,LH.	1	
- 29	96-524018-7	. . . BUSHING	1	
- 30	95-524018-3	. . BUSHING	1	
- 31	95-524018-27	. . SHAFT,PILOTS RUDDER PEDAL	1	
	95-524018-605	. PEDAL ASSY,COPILOTS/SINGLE BRAKE CONTROLS/. .	1	
		NOTE PEDAL COMPONENTS REQUIRED FOR DUAL BRAKE CONTROLS ARE OPTIONAL;THEREFORE,PARTS NOTED THUS ARE NOT AN INTEGRAL PART OF THIS ASSEMBLY.		
- 32	35-524183	. . SUPPORT ASSY,INBD	2	
		/ATTACHING PARTS/		
- 33	35-524275	. . SCREW	6	
	AN960-10	. . WASHER.	6	
	MS20365-1032	. . NUT	6	
	35-524183-2	. . . SUPPORT,INBD.	1	
	A1170-7	. . . BEARING	1	
	50-524328-1	. . LEVER,LH PEDAL ADJUSTING.	1	3
- 34	35-524666-1	. . LEVER,LH PEDAL ADJUSTING.	1	4
	50-524328-2	. . LEVER,RH PEDAL ADJUSTING.	1	3
- 35	35-524666-2	. . LEVER,RH PEDAL ADJUSTING.	1	4
		/ATTACHING PARTS/		
- 36	AN502-10-6	. . SCREW	1	
	AN960-10L	. . WASHER.	1	
- 37	105739X-ZN0135	. . BUSHING	1	
	35-524665	. . PIN ASSY.	1	
- 38	102809A125-014	. . . PIN	1	
- 39	35-524171	. . . PIN,RUDDER PEDAL ADJUSTING.	1	
	35-524308	. . SPRING,PEDAL ADJUSTING LEVER.	1	
- 40	35-820095	. . COLLAR.	2	
		/ATTACHING PARTS/		
	MS20392-1C37	. . PIN	1	
	MS24665-132	. . PIN,COTTER.	1	

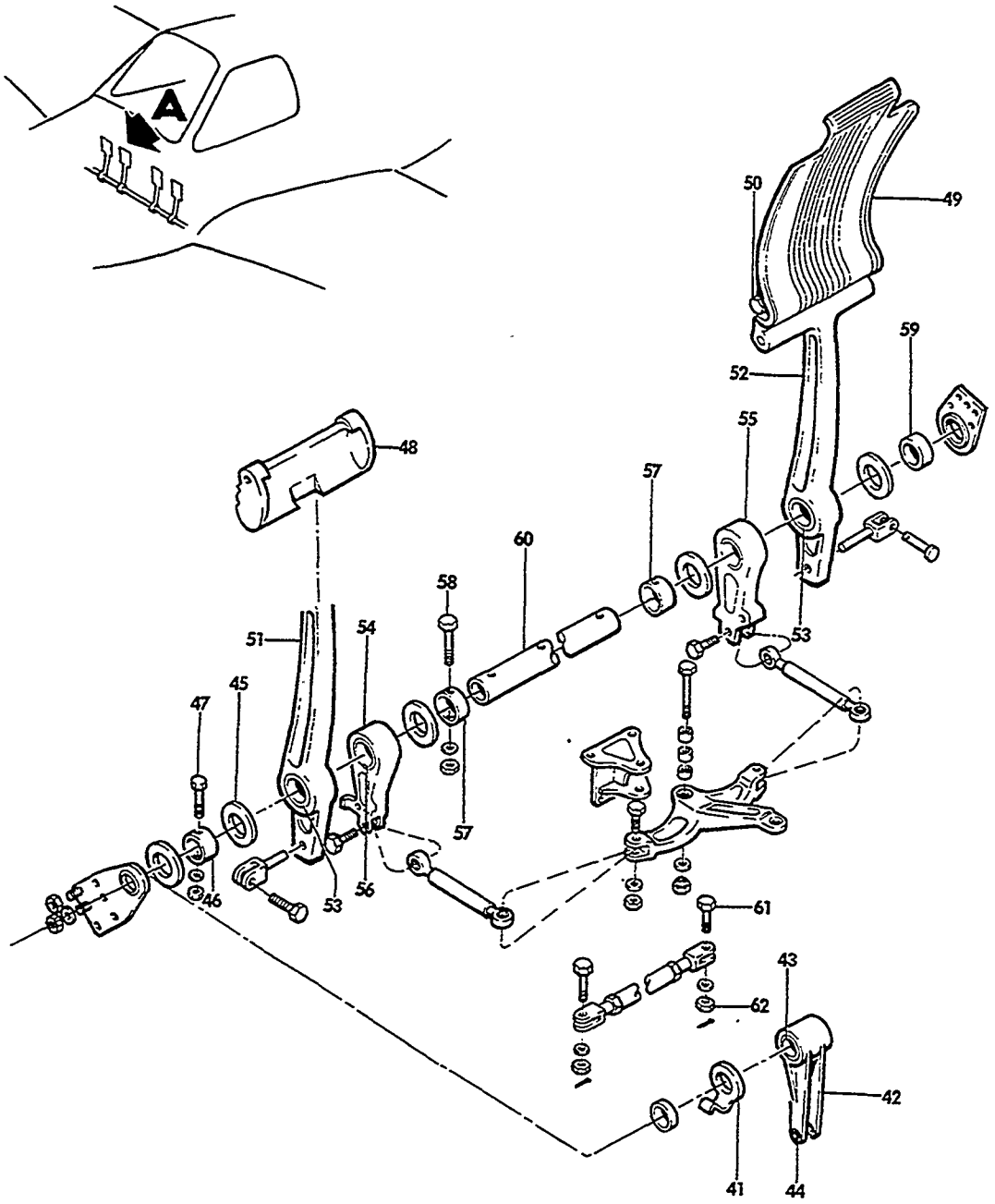

VIEW A

55-154-19

FIGURE 20-20.RUDDER PEDALS AND LINKAGE
/SHEET 3 OF 4 SHEETS

ATA CODE & INDEX NO.	PART NO.	DESCRIPTION 1 2 3 4 5 6 7	UNITS PER ASSY	USABLE ON CODE
20-20 - 41	35-825111	BRACKET,LANDING GEAR POSITION INDICATOR	1	
- 42	35-820094-2	ARM,NOSE GEAR RETRACT IDLER	1	
- 43	35-820094-4	BUSHING	1	
- 44	105740X-ZU0164	BUSHING,IDLER ARM	1	
- 45	100951S031XW	WASHER	AR	
- 46	105739S-YZ0641	BUSHING	1	
		/ATTACHING PARTS/		
- 47	AN3-14A	BOLT	1	
	AN960-10	WASHER	1	
	MS20365-1032	NUT	1	
- 48	35-524641	CAP,COPILOT RUDDER PEDAL LH AND RH	2	
		/STANDARD WITH SINGLE BRAKE CONTROLS/		
	95-810019-43	PEDAL,COPILOTS LH RUDDER	1	
		/OPTIONAL WITH DUAL BRAKE CONTROLS/		
- 49	35-524011	PEDAL,COPILOTS RH RUDDER	1	
		/OPTIONAL WITH DUAL BRAKE CONTROLS/		
		/ATTACHING PARTS/		
- 50	AN3-44A	BOLT/FOR STD CAP/	1	
	22K1-02	NUT,CAP/FOR STD CAP/	1	
	AN3-10	BOLT/FOR OPTIONAL PEDAL/	2	
	AN960-10	WASHER/FOR OPTIONAL PEDAL/	2	
	AN310-3	NUT/FOR OPTIONAL PEDAL/	2	
	MS24665-132	PIN,COTTER/FOR OPTIONAL PEDAL/	2	
- 51	50-524326-3	ARM,COPILOTS RUDDER PEDAL LH	1	
- 52	50-524326-4	ARM,COPILOTS RUDDER PEDAL RH	1	
- 53	A1170-2	BEARING	2	
- 54	35-524367-2	ARM,COPILOTS RUDDER PEDAL LOWER LH	1	
		/STANDARD WITH SINGLE BRAKE CONTROLS/		
	35-524368	ARM,COPILOTS RUDDER PEDAL LOWER LH	1	
		/OPTIONAL WITH DUAL BRAKE CONTROLS/		
- 55	35-524367-3	ARM,COPILOTS RUDDER PEDAL LOWER RH	1	
		/STD WITH SINGLE BRAKE CONTROLS/		
	35-524143-6	ARM,COPILOTS RUDDER PEDAL LOWER RH	1	
		/OPTIONAL WITH DUAL BRAKE CONTROLS/		
- 56	A1170-8	BEARING	2	
- 57	105739S-YZ0594	BUSHING	2	
		/ATTACHING PARTS/		
- 58	AN3-14A	BOLT	1	
	AN960-10	WASHER	1	
	MS20364-1032	NUT	1	
- 59	105739S-YZ0532	BUSHING	1	
- 60	35-524018	SHAFT,COPILOTS RUDDER PEDAL	1	
	35-524144	ROD ASSY,PILOT AND COPILOT RUDDER PEDAL INTER-CONNECT	1	
		/ATTACHING PARTS/		
- 61	AN23-14	BOLT	2	
	AN960-10L	WASHER	2	
- 62	MS17825-3	NUT	2	
	MS24665-132	PIN,COTTER	2	

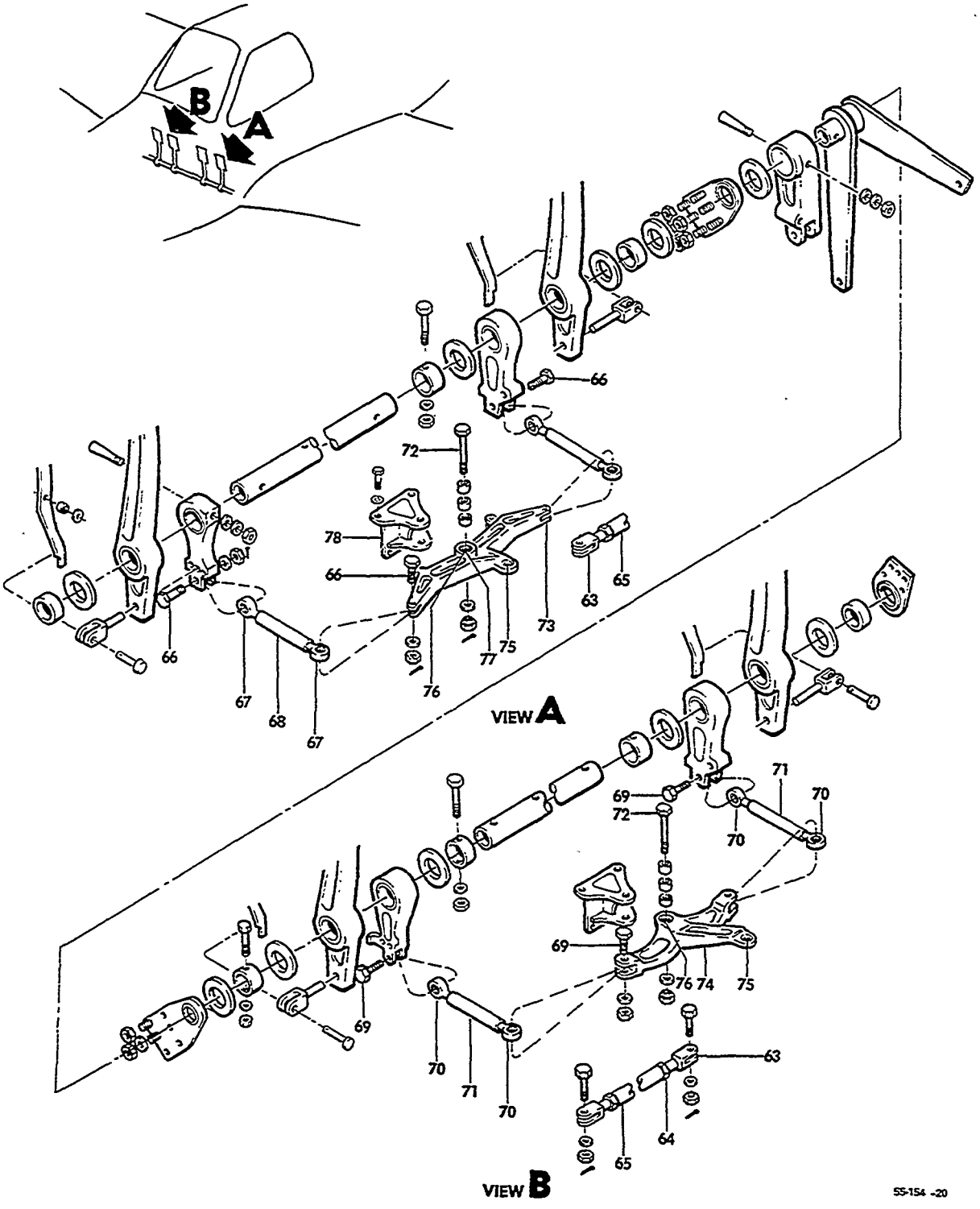

FIGURE 20-20.RUDDER PEDALS AND LINKAGE
/SHEET 4 OF 4 SHEETS/

SUB-SECT UNIT & ITEM NO.	PART NO.	DESCRIPTION 1 2 3 4 5 6 7	UNITS PER ASSY	USABLE ON CODE
20-20 - 63	35-524258	. . FORK,ROD END.	2	
- 64	AN316-6R	. . NUT,CHECK	2	
- 65	35-524144-6	. . TUBE.	1	
	95-524018-31	. ROD ASSY,RUDDER PEDAL PUSH.	1	
		/ATTACHING PARTS/		
- 66	AN3-11	. BOLT.	2	
	AN960-10	. WASHER.	2	
	AN310-3	. NUT	2	
	MS24665-132	. PIN,COTTER.	2	
- 67	RE3S7	. . BEARING,ROD END	2	
- 68	95-524018-33	. . TUBE.	1	
	35-524066	. ROD ASSY,RUDDER PEDAL PUSH/COPILOTS/.	2	
		/ATTACHING PARTS/		
- 69	AN3-11	. BOLT.	2	
	AN960-10	. WASHER.	2	
	MS17825-3	. NUT	2	
	MS24665-132	. PIN,COTTER.	2	
- 70	F3M14	. . END,ROD	2	
- 71	35-524066-2	. . TUBE.	1	
	96-524010	. BELLCRANK ASSY,RUDDER CONTROL LH.	1	
	35-524138	. BELLCRANK ASSY,RUDDER CONTROL RH.	1	
		/ATTACHING PARTS/		
- 72	AN4-21	. BOLT.	1	
	AN960-416	. WASHER.	1	
	AN310-4	. NUT	1	
	MS24665-132	. PIN,COTTER.	1	
- 73	96-524010-1	. . BELLCRANK,LH.	1	
- 74	35-524138-2	. . BELLCRANK,RH.	1	
- 75	A225	. . BEARING	1	
- 76	KP4A	. . BEARING	1	
- 77	102933D5ZX0749	. . SPACER.	1	
- 78	R 35-524136	. SUPPORT	2	1
	R 96-524026-1	. SUPPORT,LH.	1	2
	R 96-524026-2	. SUPPORT,RH.	1	2
		/ATTACHING PARTS/		
	AN3-5	. BOLT.	5	
	AN960-10	. WASHER.	5	

CODES OF EFFECTIVITY

1	TC-1 THRU TC-1607 TE-1 THRU TE-300	2	TE-301 THRU TE-942 EXCEPT TE-938
3	TC-1 THRU TC-990 TE-1 THRU TE-103	4	TC-991 THRU TC-1607 TE-104 THRU TE-942 EXCEPT TE-938

27-30-01
ELEVATOR & ELEVATOR TAB CONTROLS

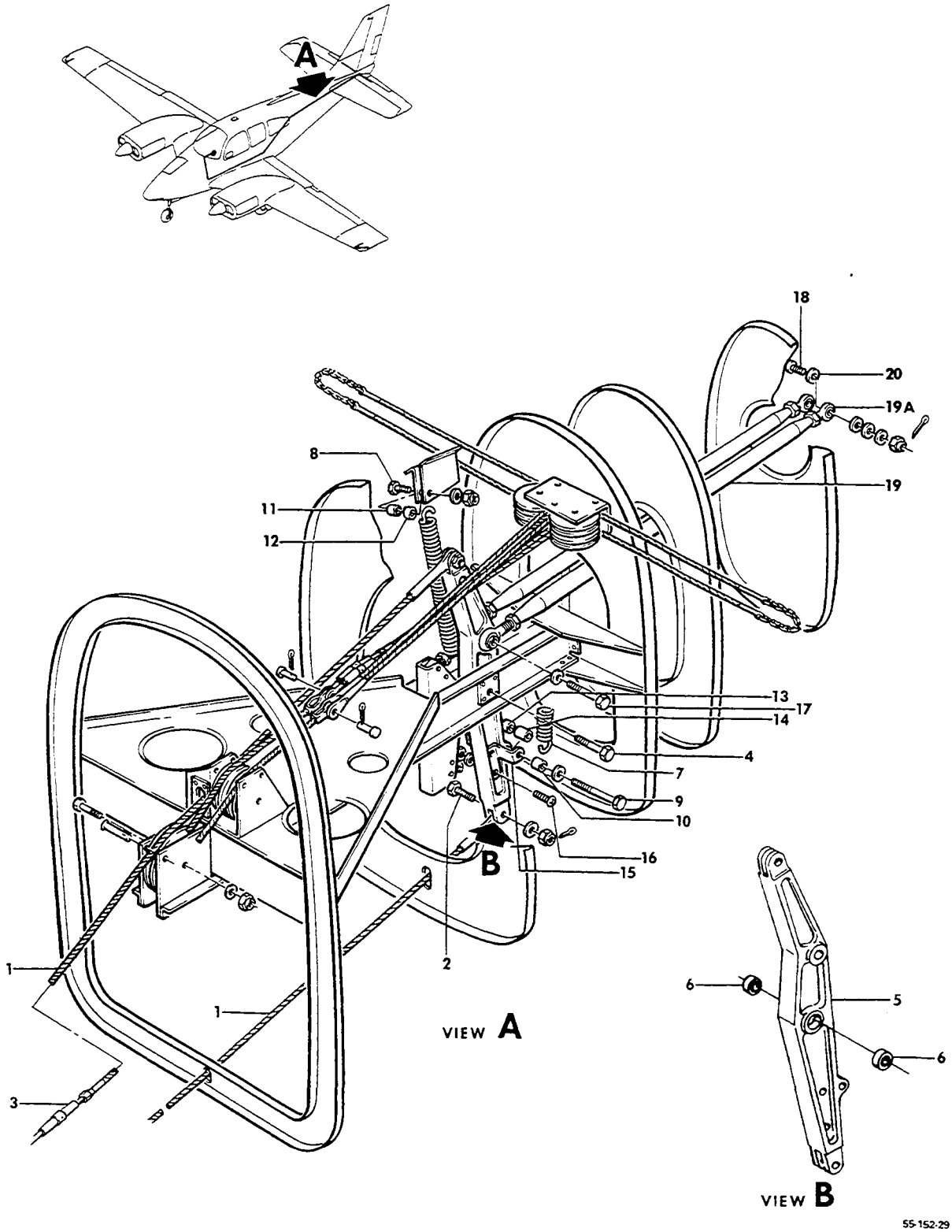

FIGURE 30-01. ELEVATOR & ELEVATOR TAB CONTROLS
/SHEET 1 OF 3 SHEETS/

SUB-SECT UNIT & ITEM NO.	PART NO.	DESCRIPTION 1 2 3 4 5 6 7	UNITS PER ASSY	USABLE ON CODE
30-01	96-524000	CONTROLS INSTL,FUSELAGE ELEVATOR FLIGHT	NP	1
	96-524000-33	CONTROLS INSTL,FUSELAGE ELEVATOR FLIGHT	NP	2
- 1	NAS304-35-0564	. CABLE ASSY,REAR FUSELAGE ELEVATOR	2	
		/ATTACHING PARTS/		
- 2	AN23-13/M/	. BOLT,ELEVATOR CABLE ATTACH.	1	
	AN960-416L	. WASHER.	1	
	AN320-3	. NUT	1	
	MS24665-134	. PIN,COTTER.	1	
		----*----		
- 3	MS21251B2L	. BARREL,TURNBUCKLE	2	
	95-524011	. BELLCRANK ASSY,ELEVATOR/PUSH PULL/.	1	3
	95-524011-601	. BELLCRANK ASSY,ELEVATOR/PUSH PULL/.	1	4
		/ATTACHING PARTS/		
- 4	AN24-28/M/	. BOLT,ELEVATOR BELLCRANK	1	
	AN960-416L	. WASHER.	2	
	MS17825-4	. NUT	1	
	MS24665-132	. PIN,COTTER.	1	
		----*----		
- 5	95-524011-1	. . BELLCRANK,ELEVATOR/PUSH PULL/	1	
- 6	AN201KP4A	. . BEARING,ELEVATOR BELLCRANK.	2	
	NAS77-4-45	. . BUSHING,ELEVATOR/PUSH PULL ROD/	2	4
- 7	95-524019-5	. SPRING,ELEVATOR DOWN TENSION.	2	
		/ATTACHING PARTS/		
- 8	AN3-6A/M/	. BOLT,ELEVATOR SPRING UPPER ATTACH	1	
- 9	AN3-35A/M/	. BOLT,ELEVATOR SPRING LOWER ATTACH	1	
- 10	AN201KP3A	. BEARING	1	
- 11	100696S-ZC008	. SPACER,UPPER.	1	
- 12	100696S-ZN007	. SPACER,UPPER.	1	
- 13	100696S-ZL009	. SPACER,LOWER.	1	
- 14	100696X-ZL102	. SPACER.	1	
	AN960-10	. WASHER.	1	
	100951XL050ZM	. WASHER.	1	
	AN365-1032	. NUT	3	
		----*----		
- 15	95-524038-11	. BRACKET,DOWN SPRING LH.	1	
	95-524038-12	. BRACKET,DOWN SPRING RH.	1	
		/ATTACHING PARTS/		
- 16	AN3-10A/M/	. BOLT.	2	
	AN960-10	. WASHER.	2	
	AN365-1032	. NUT	2	
		----*----		
	R 33-524030	. TUBE ASSY,ELEVATOR CONTROL/PUSH PULL/	2	
		/ATTACHING PARTS/		
- 17	R NAS1304-34D	. BOLT,PUSH ROD FWD	1	
- 18	R NAS1304-26D	. BOLT,PUSH ROD FWD	1	
	R AN960-416	. WASHER/UNDER NUT/	2	
- 19	R NAS77-4-45	. BUSHING/INSERT INTO BELLCRANK/.	2	
	R NAS77-4-97	. BUSHING/INSERT INTO ELEVATOR FITTING/	2	
	R MS17825-4	. NUT,PUSH ROD FWD BOLT	1	
	R MS17825-5	. NUT,PUSH ROD AFT BOLT	1	
	MS24665-134	. PIN,COTTER.	2	
		----*----		
- 19A	R 95-524017-8	. . TUBE,ELEVATOR CONTROL/PUSH PULL/.	1	
- 20	R ST48	. . END,ROD	2	
	95-524017-8	. TUBE,ELEVATOR CONTROL/PUSH PULL/.	2	3
	HM-6TM	. END,ROD	4	3
	AN6-25/M/	. BOLT,PUSH PULL ROD FWD.	2	3
	AN26-31/M/	. BOLT,PUSH PULL ROD AFT.	2	3
	AN960-616	. WASHER.	2	3
	AN960-616L	. WASHER.	2	3
	AN316-6R	. NUT	4	3
	MS24665-134	. PIN,COTTER.	4	

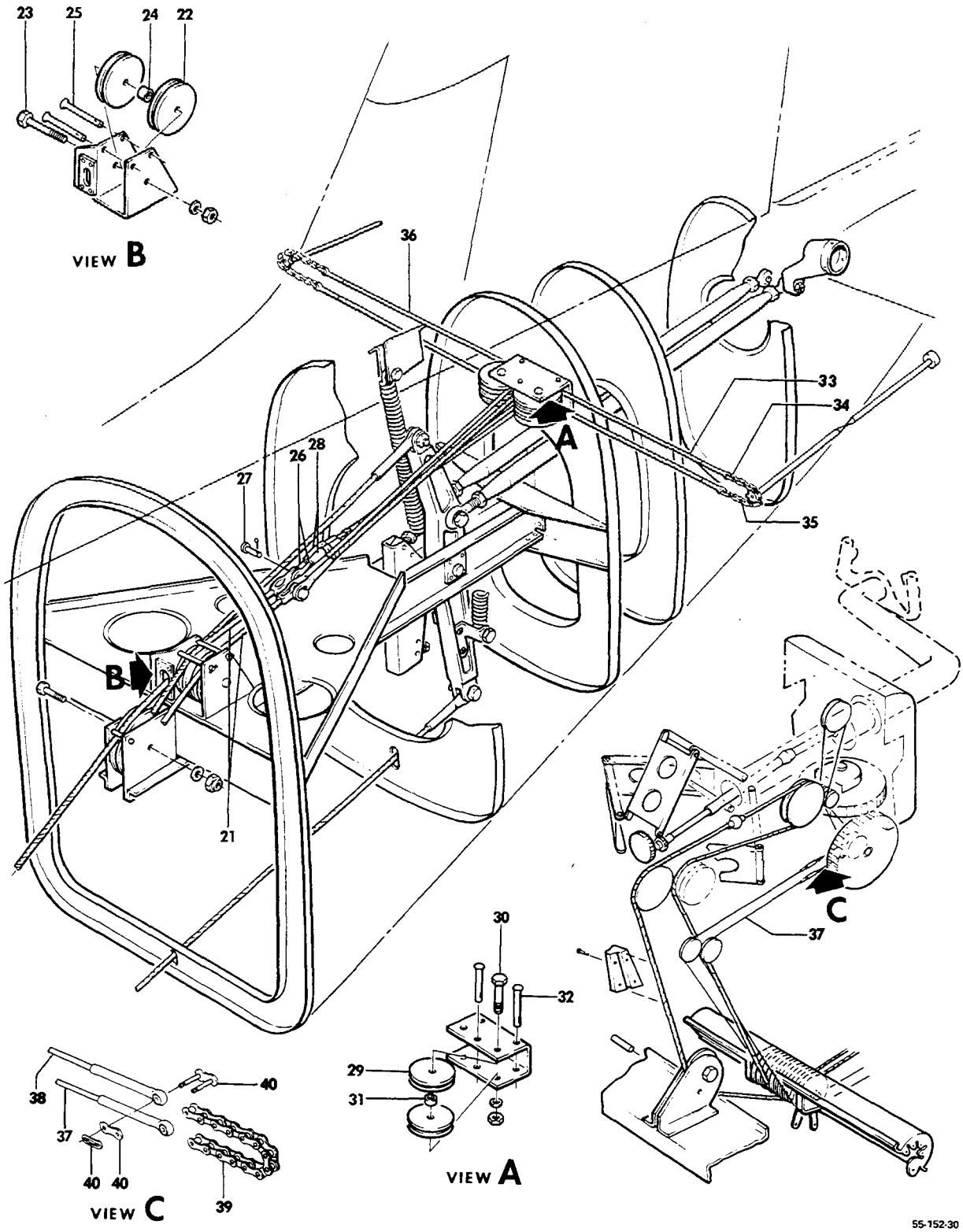

FIGURE 30-01.ELEVATOR & ELEVATOR TAB CONTROLS
/SHEET 2 OF 3 SHEETS/

ATA CODE & INDEX NO.	PART NO.	DESCRIPTION 1 2 3 4 5 6 7	UNITS PER ASSY	USABLE ON CODE
30-01 - 21	NAS312-37-0323	. CABLE ASSY,ELEVATOR TAB UP.	1	
	NAS312-37-0302	. CABLE ASSY,ELEVATOR TAB DOWN.	1	
	130000BEP3	. PULLEY.	2	1
- 22	118540BHP3	. PULLEY.	2	2
		/ATTACHING PARTS/		
	130001BB2	. BEARING	1	1
	105739S-XU0312	. BUSHING,BEARING	1	1
	AN4-15A/M/	. BOLT.	1	1
- 23	AN4-17A/M/	. BOLT.	1	2
- 24	NAS43HT4-50	. SPACER.	1	2
	AN960-416	. WASHER.	1	
	MS20364-428	. NUT	1	
		——+——		
- 25	NAS427K21	. PIN,PULLY GUARD	2	
	33-410031-75	. BRACKET,ELEVATOR PULLEY/STA 233.50/	1	
- 26	AN165-8R5	. EYE,ELEVATOR TAB TURNBUCKLE	2	
		/ATTACHING PARTS/		
- 27	MS20392-2-13	. PIN,STRAIGHT.	1	
	AN960-10L	. WASHER.	1	
	MS24665-132	. PIN,COTTER.	1	
		——+——		
- 28	MS21251B5L	. BARREL,ELEVATOR TAB TURNBUCKLE.	2	
- 29	130000BEP1	. PULLEY.	4	
		/ATTACHING PARTS/		
	130001BB1	. BUSHING,PLAIN BEARING	4	
- 30	AN3-15A/M/	. BOLT.	2	
- 31	100696S-ZF016	. SPACER.	2	
	AN960-10	. WASHER.	2	
	AN365-1032	. NUT	2	
		——+——		
- 32	NAS427K22	. PIN,PULLEY GUARD.	3	
	95-440013-103	. BRACKET,ELEVATOR PULLEY/STA 257.606/.	1	
- 33	96-524000-7	. CABLE ASSY,ELEVATOR TAB LH.	1	
- 34	C4189	. . LINK,CHAIN.	2	
- 35	45-526011-7	. . CHAIN,ELEVATOR TAB.	1	
- 36	96-524000-9	. CABLE ASSY,ELEVATOR TAB RH.	1	
	C4189	. . LINK,CHAIN MASTER	2	
	45-526011-7	. . CHAIN,ELEVATOR TAB RH	1	
- 37	96-524000-11	. CABLE ASSY,ELEVATOR TAB FWD	1	
	96-524000-25	. . CABLE ASSY,ELEVATOR TAB FWD	1	
- 38	96-524000-27	. . CABLE ASSY,ELEVATOR TAB FWD	1	
- 39	95-524000-27	. . CHAIN,ELEVATOR TAB FWD.	1	
- 40	C4189	. . LINK,CHAIN.	2	

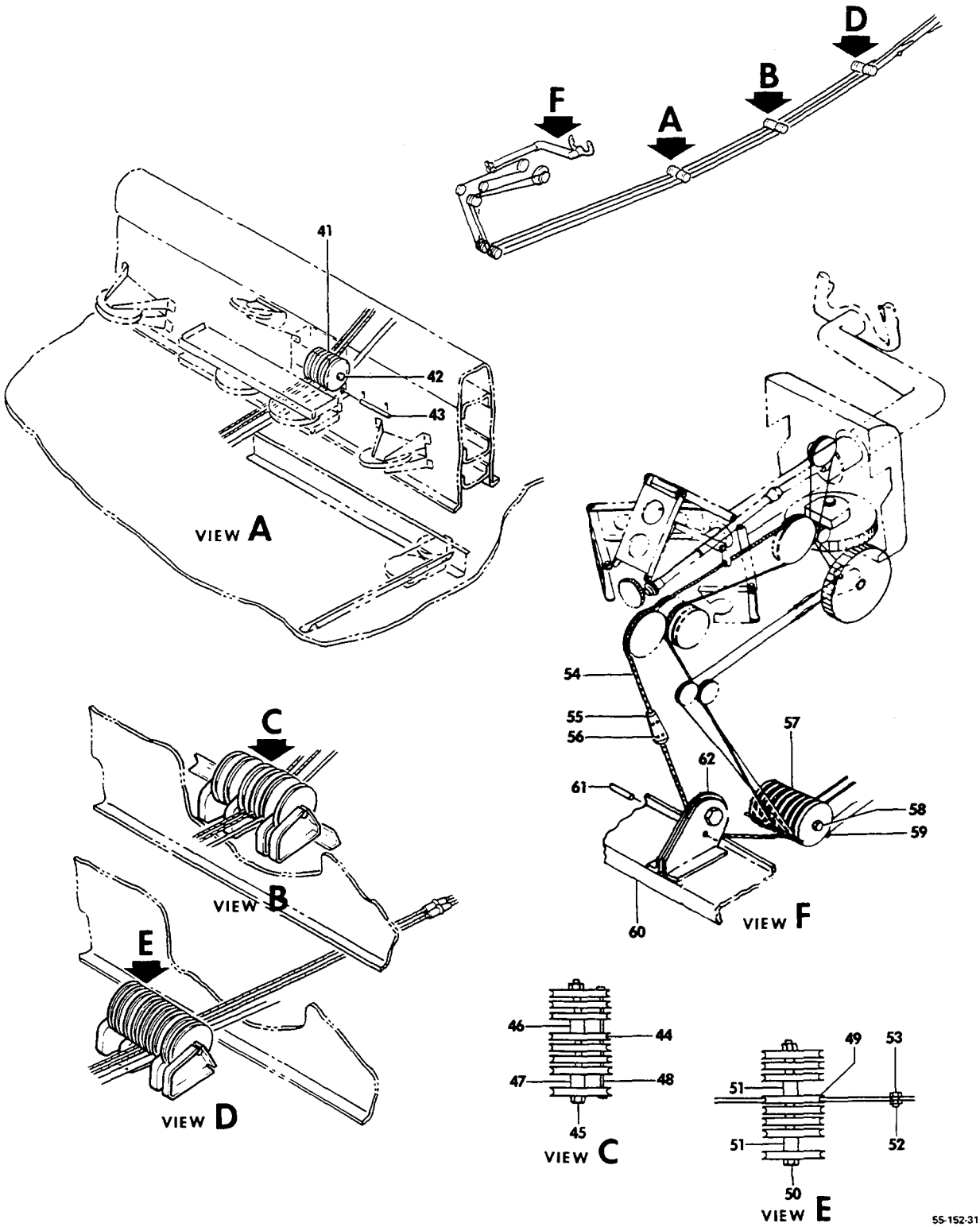

FIGURE 30-01.ELEVATOR & ELEVATOR TAB CONTROLS
/SHEET 3 OF 3 SHEETS/

SUB-SECT UNIT & ITEM NO.	PART NO.	DESCRIPTION 1 2 3 4 5 6 7	UNITS PER ASSY	USABLE ON CODE
30-01 - 41	130000BEP3	. PULLEY,ELEVATOR & ELEVATOR TAB CABLES/AFT OF. REAR SPAR /ATTACHING PARTS/	4	
	130001BB8	. BUSHING,PLAIN BEARING	1	
- 42	AN4-33A/M/	. BOLT.	1	
	AN960-416	. WASHER.	1	
	AN365-428	. NUT	1	
	AN380-2-2	. PIN,COTTER.	1	
		----*----		
- 43	95-524000-19	. PIN,ELEVATOR CABLE STOP	1	
	95-524000-1	. BRKT,PULLEY/FLT CONT CABLES,REAR SPAR CARRY . THRU/	1	
- 44	R 130000BEP3	. PULLEY/ELEV & ELEV TAB CABLES STA 151.00/ . . /ATTACHING PARTS/	4	
	130001B8	. BUSHING,PLAIN BEARING	1	
- 45	AN4-54A/M/	. BOLT.	1	
- 46	105739S-XU0516	. BUSHING	1	
- 47	105739S-XU0484	. BUSHING	1	
	AN960-416	. WASHER.	1	
	MS20365-428	. NUT	1	
	MS24665-132	. PIN,COTTER.	1	
		----*----		
- 48	35-524003	. PIN,CABLE RETAINING	1	
	35-410015	. BRACKET,PULLEY/FLIGHT CONTROL CABLES STA 151/	1	
	35-410015-1	. BRACKET,PULLEY/FLIGHT CONTROL CABLES STA 151/	1	
- 49	R 130000BEP3	. PULLEY/ELEV & ELEV TAB CABLES STA 179.00/ . . /ATTACHING PARTS/	4	
	130001B8	. BUSHING,PLAIN BEARING	1	
- 50	AN4-44A/M/	. BOLT.	1	
- 51	105739S-XU0484	. BUSHING	2	
	AN960-416	. WASHER.	1	
	MS20365428	. NUT	1	
		----*----		
- 52	45-524624	. STOP,ELEVATOR TAB CABLE . . . . . /ATTACHING PARTS/	2	
- 53	MS20364-524	. NUT	1	
	AN960D516L	. WASHER.	2	
		----*----		
	95-524000-25	. CABLE ASSY,ELEVATOR CONTROL	1	1
	96-524000-35	. CABLE ASSY,ELEVATOR CONTROL	1	2
	NAS304-44-3507	. . CABLE ASSY,ELEVATOR	1	1
- 54	NAS304-44-3511	. . CABLE ASSY,ELEVATOR	1	2
	AN960-10	. . WASHER.	2	2
- 55	96-524021-5	. WEIGHT,BOB HALF . . . . . /ATTACHING PARTS/	2	2
- 56	AN3-24A/M/	. BOLT.	2	
	AN3-14A/M/	. BOLT.	2	
	AN960-416	. WASHER.	8	
	MS20365-1032	. NUT	4	
		----*----		
- 57	118540BHP4	. PULLEY,ELEVATOR/CONTROL CONSOLE/. . . . . /ATTACHING PARTS/	2	2
- 58	AN-42A/M/	. BOLT.	1	
	AN960-416	. WASHER.	1	
	MS20365-428	. NUT	1	
		----*----		
- 59	96-524021-3	. BRACKET,ELEVATOR DOWN CABLE	1	2
- 60	96-524021-1	. SUPPORT,ELEVATOR DOWN CABLE BRACKET	1	2
- 61	NAS427K11	. PIN,CABLE RETAINING	1	2
- 62	118540BHP3	. PULLEY,ELEVATOR CABLE/CONTROL CONSOLE/. . . .	1	2

CODES OF EFFECTIVITY

1	TC-1 THRU TC-1607 EXCEPT TC-350	2	TC-350 & TE-1 THRU TE-942 EXCEPT TE-938
3	TC-1 THRU TC-1333 & TE-1 THRU TE-801	4	TC-1334 THRU TC-1607 TE-802 THRU TE-942 EXCEPT TE-938

27-30-11
ELEVATOR TRIM TAB ACTUATOR

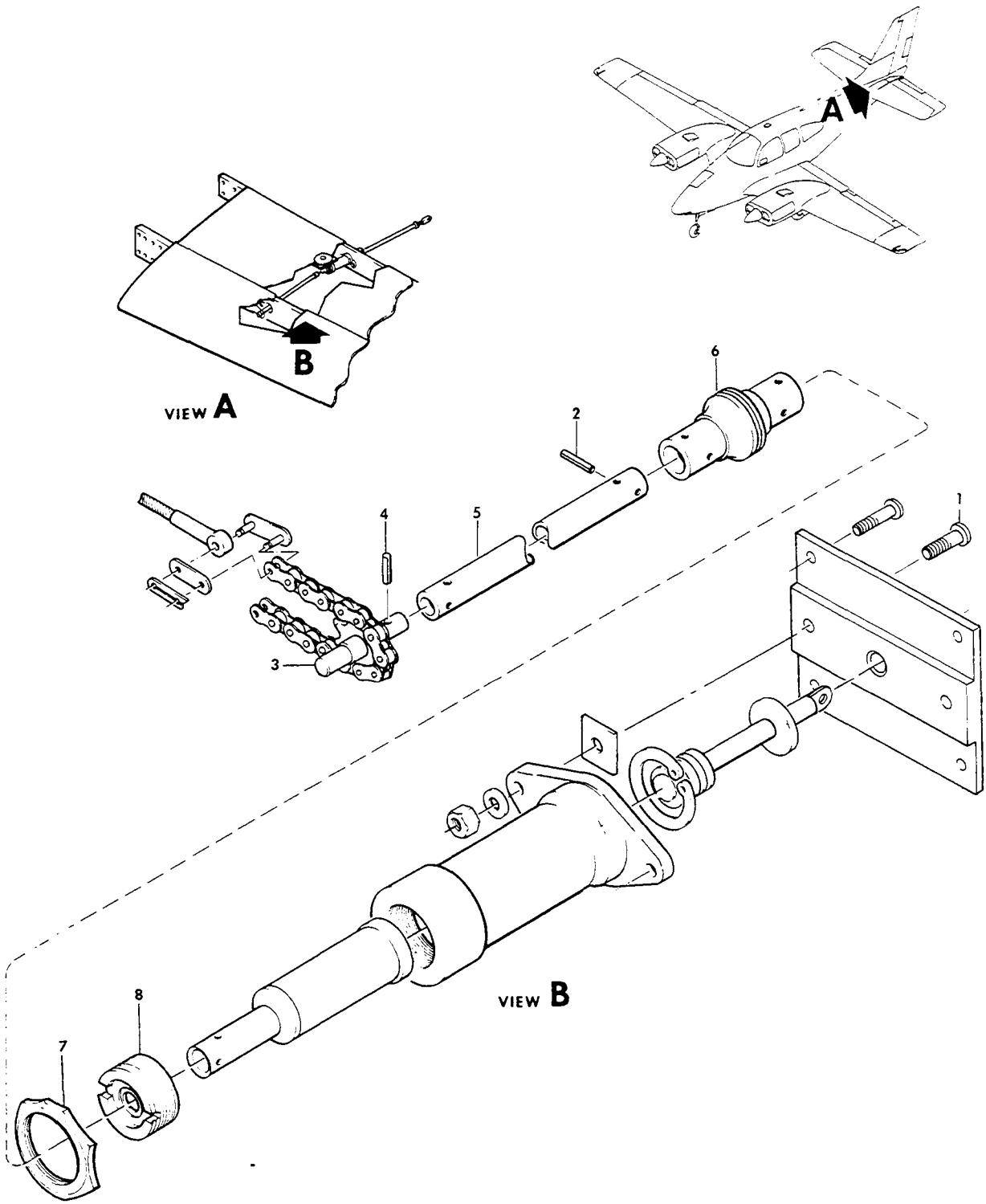

FIGURE 30-11.ELEVATOR TRIM TAB ACTUATOR
/SHEET 1 OF 3 SHEETS/

SUB-SECT UNIT & ITEM NO.		PART NO.	DESCRIPTION 1 2 3 4 5 6 7	UNITS PER ASSY	USABLE ON CODE
30-11		R 45-526005-1	ACTUATOR CONTROL INSTL,LH ELEVATOR TRIM TAB . .	NP	1
		R 96-526013-1	ACTUATOR CONTROL INSTL,LH ELEVATOR TRIM TAB . .	NP	2
		R 96-526013-3	ACTUATOR CONTROL INSTL,LH ELEVATOR TRIM TAB . .	NP	3
		R 45-526005-2	ACTUATOR CONTROL INSTL,RH ELEVATOR TRIM TAB . .	NP	1
		R 96-526013-2	ACTUATOR CONTROL INSTL,RH ELEVATOR TRIM TAB . .	NP	2
		R 96-526013-4	ACTUATOR CONTROL INSTL,RH ELEVATOR TRIM TAB . .	NP	3
		R 95-620010-609	. ACTUATOR ASSY,LH ELEVATOR TRIM TAB.	1	1
		R 96-526013-601	. ACTUATOR ASSY,LH ELEVATOR TRIM TAB. . . . . /ORDER 96-526013-611/	NP	13
		R 96-526013-605	. ACTUATOR ASSY,LH ELEVATOR TRIM TAB. . . . . /ORDER 96-526013-611/	NP	15
		R 96-526013-611	. ACTUATOR ASSY,LH ELEVATOR TRIM TAB.	1	16
		R 96-526013-603	. ACTUATOR ASSY,LH ELEVATOR TRIM TAB. . . . . /ORDER 96-526013-613/	NP	14
		R 96-526013-607	. ACTUATOR ASSY,LH ELEVATOR TRIM TAB. . . . . /ORDER 96-526013-613/	NP	12
		R 96-526013-613	. ACTUATOR ASSY,LH ELEVATOR TRIM TAB.	1	17
		R 95-620010-610	. ACTUATOR ASSY,RH ELEVATOR TRIM TAB.	1	1
		R 96-526013-602	. ACTUATOR ASSY,RH ELEVATOR TRIM TAB. . . . . /ORDER 96-526013-612/	NP	13
		R 96-526013-606	. ACTUATOR ASSY,RH ELEVATOR TRIM TAB. . . . . /ORDER 96-526013-612/	NP	15
		R 96-526013-612	. ACTUATOR ASSY,RH ELEVATOR TRIM TAB.	1	16
		R 96-526013-604	. ACTUATOR ASSY,RH ELEVATOR TRIM TAB. . . . . /ORDER 96-526013-614/	NP	14
		R 96-526013-608	. ACTUATOR ASSY,RH ELEVATOR TRIM TAB. . . . . /ORDER 96-526013-614/	NP	12
		R 96-526013-614	. ACTUATOR ASSY,RH ELEVATOR TRIM TAB. . . . . /ATTACHING PARTS/	1	17
	- 1	R MS27039-1-13	. SCREW	2	
		R AN960-10	. WASHER.	2	
		R 130909N29	. NUT	2	
		R 96-526018	. . TUBE ASSY,ELEVATOR TRIM TAB ACTUATOR. . . .	2	
	- 2	R MS9048-070	. . . PIN,ROLL.	4	
	- 3	R 45-526005-3	. . . SPROCKET.	1	
	- 4	R MS9048-068	. . . PIN,ROLL.	2	
	- 5	R 96-526018-1	. . . TUBE,ELEVATOR TRIM TAB ACTUATOR	1	4
		R 45-526007-1	. . . TUBE,ELEVATOR TRIM TAB ACTUATOR	1	1
	- 6	R 45-526015	. . JOINT,UNIVERSAL	1	
		R 96-526014-16	. . ACTUATOR ASSY,LH ELEVATOR TRIM TAB.	1	5
		R 96-526014-14	. . ACTUATOR ASSY,LH ELEVATOR TRIM TAB.	1	6
		R 45-526565-11	. . ACTUATOR ASSY,LH ELEVATOR TRIM TAB.	1	1
		R 96-526014-15	. . ACTUATOR ASSY,RH ELEVATOR TRIM TAB.	1	5
		R 96-526014-13	. . ACTUATOR ASSY,RH ELEVATOR TRIM TAB.	1	6
		R 45-526565-13	. . ACTUATOR ASSY,RH ELEVATOR TRIM TAB.	1	1
	- 7	R 169-524033-3	. . . NUT,CHECK	1	4
		R 45-524564	. . . NUT,CHECK	1	1
	- 8	R 169-524033-1	. . . BUSHING,THREADED.	1	4
		R 45-524626	. . . BUSHING,THREADED.	1	1

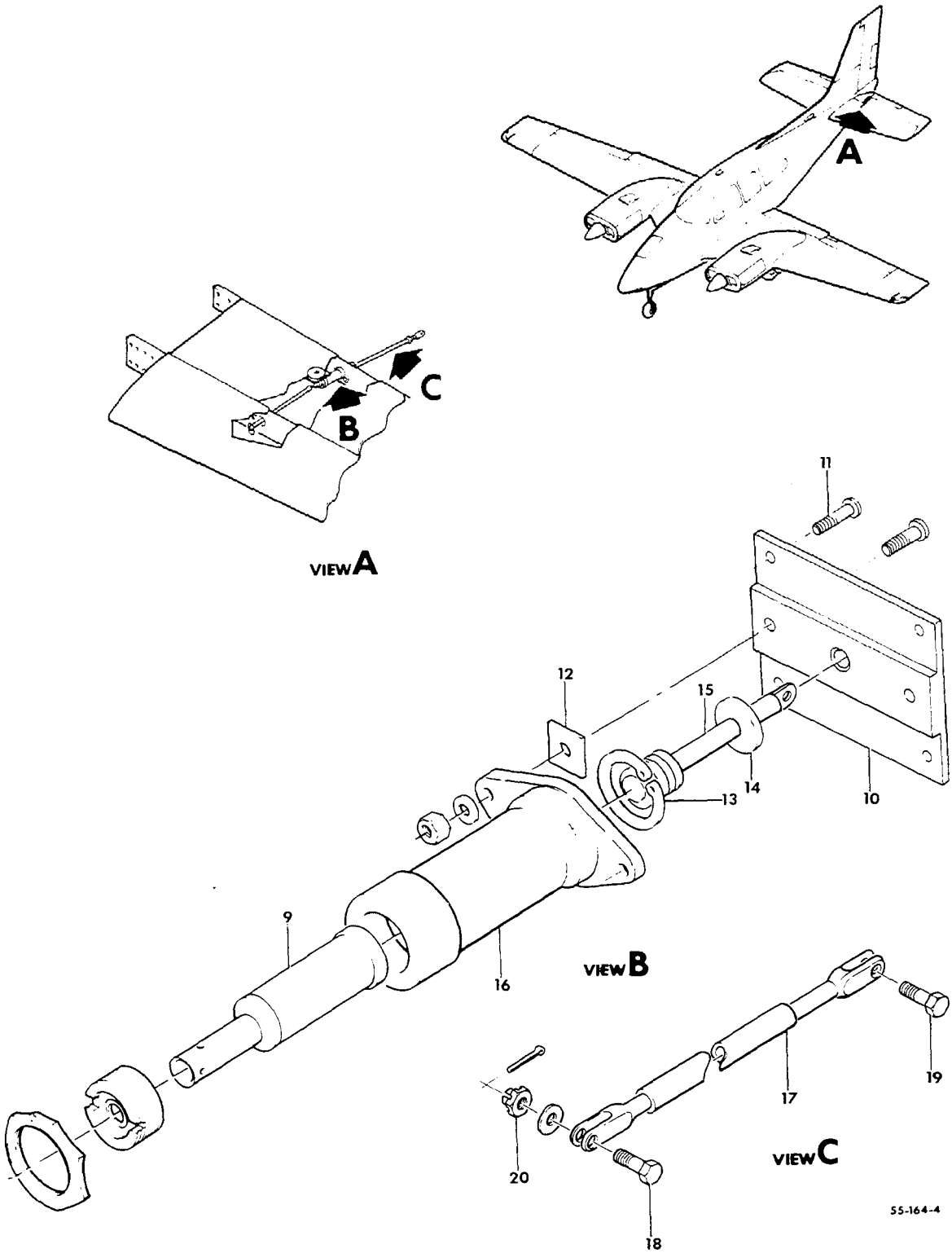

FIGURE 30-11. ELEVATOR TRIM TAB ACTUATOR
/SHEET 2 OF 3 SHEETS/

SUB-SECT UNIT & ITEM NO.		PART NO.	DESCRIPTION 1 2 3 4 5 6 7	UNITS PER ASSY	USABLE ON CODE
30-11 - 9	R	96-526016-2	. . . NUT ASSY,LH ELEVATOR TRIM TAB ACTUATOR. . /RH THREADED/	1	4
	R	45-524557-5	. . . NUT ASSY,LH ELEVATOR TRIM TAB ACTUATOR. . /RH THREADED/	1	1
	R	96-526016-1	. . . NUT ASSY,RH ELEVATOR TRIM TAB ACTUATOR. . /LH THREADED/	1	4
	R	45-524557-7	. . . NUT ASSY,RH ELEVATOR TRIM TAB ACTUATOR. . /LH THREADED/	1	1
	R	AN201KP6A	. . . BEARING	2	1
	R	AN6227B8	. . . PACKING	1	1
- 10	R	96-526015-1	. . . CAP,BEARING	1	1
	R	96-526015	. . . CAP,BEARING . . . . . /ATTACHING PARTS/	1	4
- 11	R	MS27039-1-13	. . . SCREW	4	4
	R	AN3-6A/M/	. . . BOLT.	4	1
	R	AN960-10	. . . WASHER.	4	
	R	130909N29	. . . NUT	4	
			----*----		
- 12	R	99-620019	. . . PAD,FRICTION.	2	
- 13	R	NAS50-87	. . . RING,RETAINING.	1	
- 14	R	169-524033-5	. . . COLLAR.	1	4
	R	45-524562	. . . BUSHING	1	1
- 15	R	96-526017-6	. . . SCREW,LH ELEVATOR TRIM TAB ACTUATOR . . . /RH THREADED/ORDER 96-526017-10/	NP	5
	R	96-526017-10	. . . SCREW,LH ELEVATOR TRIM TAB ACTUATOR . . . /RH THREADED/	1	6
	R	45-524566-9	. . . SCREW,LH ELEVATOR TRIM TAB ACTUATOR . . . /RH THREADED/	1	1
	R	96-526017-5	. . . SCREW,RH ELEVATOR TRIM TAB ACTUATOR . . . /LH THREADED/ORDER 96-526017-9/	NP	5
	R	96-526017-9	. . . SCREW,RH ELEVATOR TRIM TAB ACTUATOR . . . /LH THREADED/	1	6
	R	45-524566-11	. . . SCREW,RH ELEVATOR TRIM TAB ACTUATOR . . . /LH THREADED/	1	1
- 16	R	45-524561-7	. . . HOUSING,LH & RH	1	
	R	96-524032	. . . PIN,SHOULDER.	1	11
	R	AN960-4	. . . WASHER.	1	11
	R	MS20365-440	. . . NUT	1	11
	R	NAS42HT3-28	. . . SPACER.	1	10
- 17	R	96-520012-13	. ROD ASSY,ACTUATOR TO ELEVATOR TRIM TAB. . . . /ORDER 96-520013-7/	1	1
	R	96-526019	. ROD ASSY,ACTUATOR TO ELEVATOR TRIM TAB. . . . /ORDER 96-526021-9/	1	7
	R	96-526019-5	. ROD ASSY,ACTUATOR TO ELEVATOR TRIM TAB. . . . /ORDER 96-526021-1/	1	8
	R	96-526019-13	. ROD ASSY,ACTUATOR TO ELEVATOR TRIM TAB. . . . /ORDER 96-526021-1/	1	9
	R	96-526021-1	. ROD ASSY,ACTUATOR TO ELEVATOR TRIM TAB. . . . /ATTACHING PARTS/	1	4
- 18	R	NAS464P4-6	. BOLT/TUBE ASSY TO ELEVATOR TRIM TAB ACTUATOR.	1	
- 19	R	NAS464P4-8	. BOLT/TUBE ASSY TO ELEVATOR TRIM TAB	1	
	R	AN960-416L	. WASHER.	2	
	R	105740X-ZM0290	. BUSHING/TUBE ASSY TO ELEVATOR TRIM TAB/ . . .	1	
- 20	R	130909N16	. NUT	2	
	R	MS24665-132	. PIN,COTTER.	2	
			----*----		

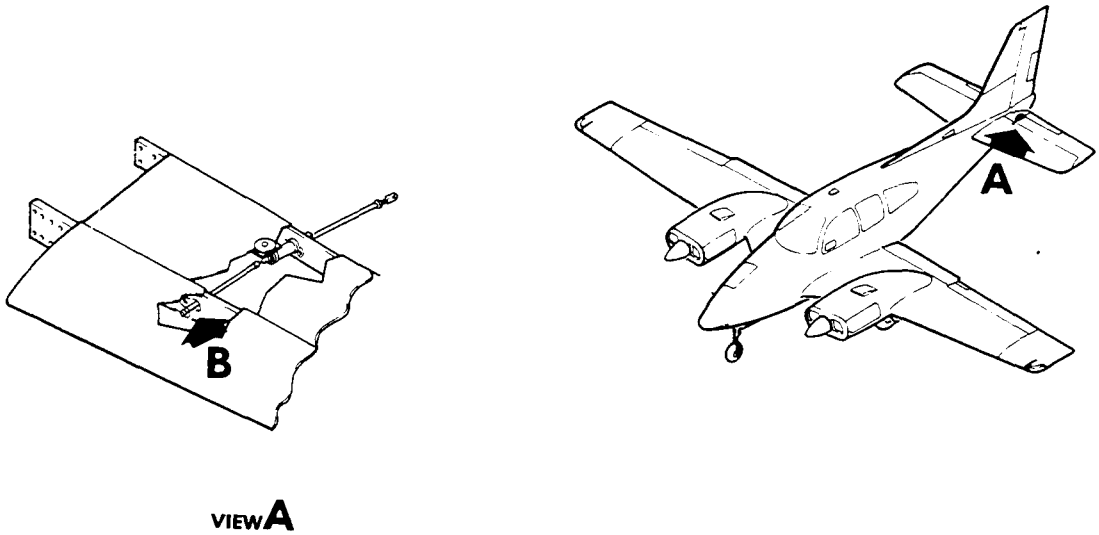

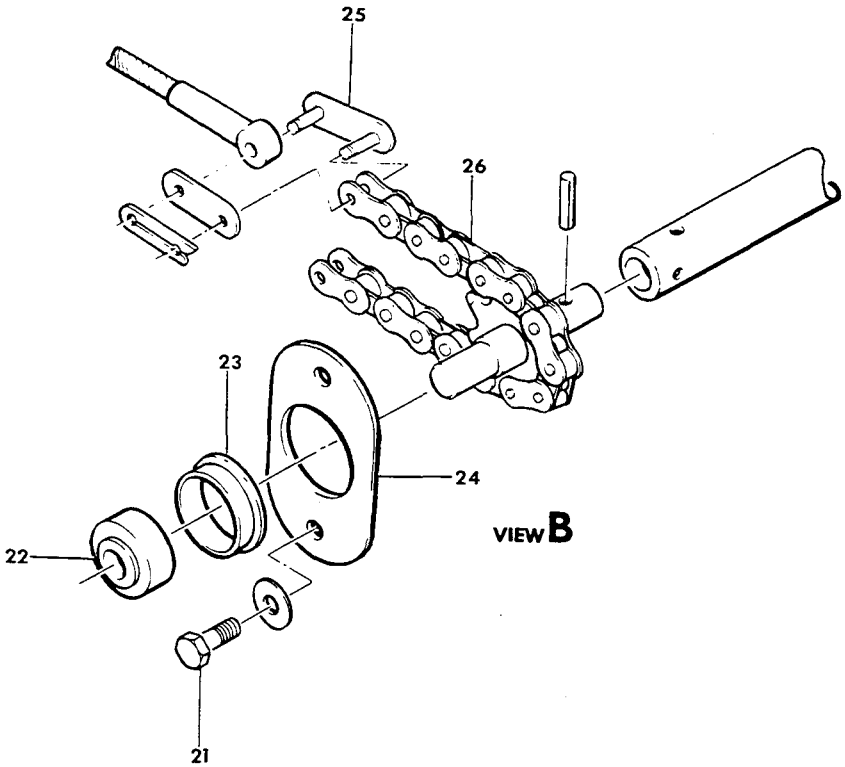

55-164-11

FIGURE 30-11. ELEVATOR TRIM TAB ACTUATOR
/SHEET 3 OF 3 SHEETS/

SUB-SECT UNIT & ITEM NO.	PART NO.	DESCRIPTION 1 2 3 4 5 6 7	UNITS PER ASSY	USABLE ON CODE
30-11	R 45-526006-5	. PLATE ASSY,ELEVATOR TRIM TAB ACTUATOR TUBE. . /ATTACHING PARTS/	1	
- 21	R 130909812	. BOLT.	2	
	R AN960-10L	. WASHER.	2	
		----*----		
- 22	R AN201KP3A	. . BEARING	1	
- 23	R 45-526006-3	. . BUSHING	1	
- 24	R 45-526006-7	. . PLATE	1	
	R 45-526008	. BRACKET,ELEVATOR TRIM TAB TORQUE CONTROL. . .	1	1
	R 96-524000-7	CHAIN & CABLE ASSY,LH ELEVATOR TRIM TAB CONTROL	1	
	R 96-524000-9	CHAIN & CABLE ASSY,RH ELEVATOR TRIM TAB CONTROL	1	
- 25	R C4189	. LINK,MASTER/CHAIN TO CABLE TERMINAL/.	2	
- 26	R 45-526011-7	. CHAIN	1	

CODES OF EFFECTIVITY

1	TC-1 THRU TC-1143 TE-1 THRU TE-617	2	TC-1144 THRU TC-1226 TE-618 THRU TE-937 TE-939 THRU TE-942
3	TC-1227 THRU TC-1607	4	TC-1144 THRU TC-1607 TE-618 THRU TE-937 TE-939 THRU TE-942
5	TE-618 THRU TE-937 TE-939 THRU TE-942	6	TC-1144 THRU TC-1607
7	TC-1144 THRU TC-1379 TE-618 THRU TE-837	8	TC-1380 THRU TC-1573 TE-838 THRU TE-924
9	TC-1574 THRU TC-1607 TE-925 THRU TE-937 TE-939 THRU TE-942	10	TC-1 THRU TC-1070 TC-1072, TE-1 THRU TE-520 TE-522 THRU TE-527 TE-539 THRU TE-542
11	TC-1071, TC-1073 THRU TC-1143 TE-521, TE-528 THRU TE-538 TE-543 THRU TE-617	12	TC-1413 THRU TC-1607
13	TC-1144 THRU TC-1226 TE-618 THRU TE-747	14	TC-1227 THRU TC-1412 TE-748 THRU TE-848
15	TE-849 THRU TE-937 TE-939 THRU TE-942	16	TC-1144 THRU TC-1226 TE-618 THRU TE-747 TE-849 THRU TE-937 TE-939 THRU TE-942
17	TC-1227 THRU TC-1607 TE-748 THRU TE-848		

27-30-20
ELEVATOR TRIM TAB CONTROLS,CONSOLE

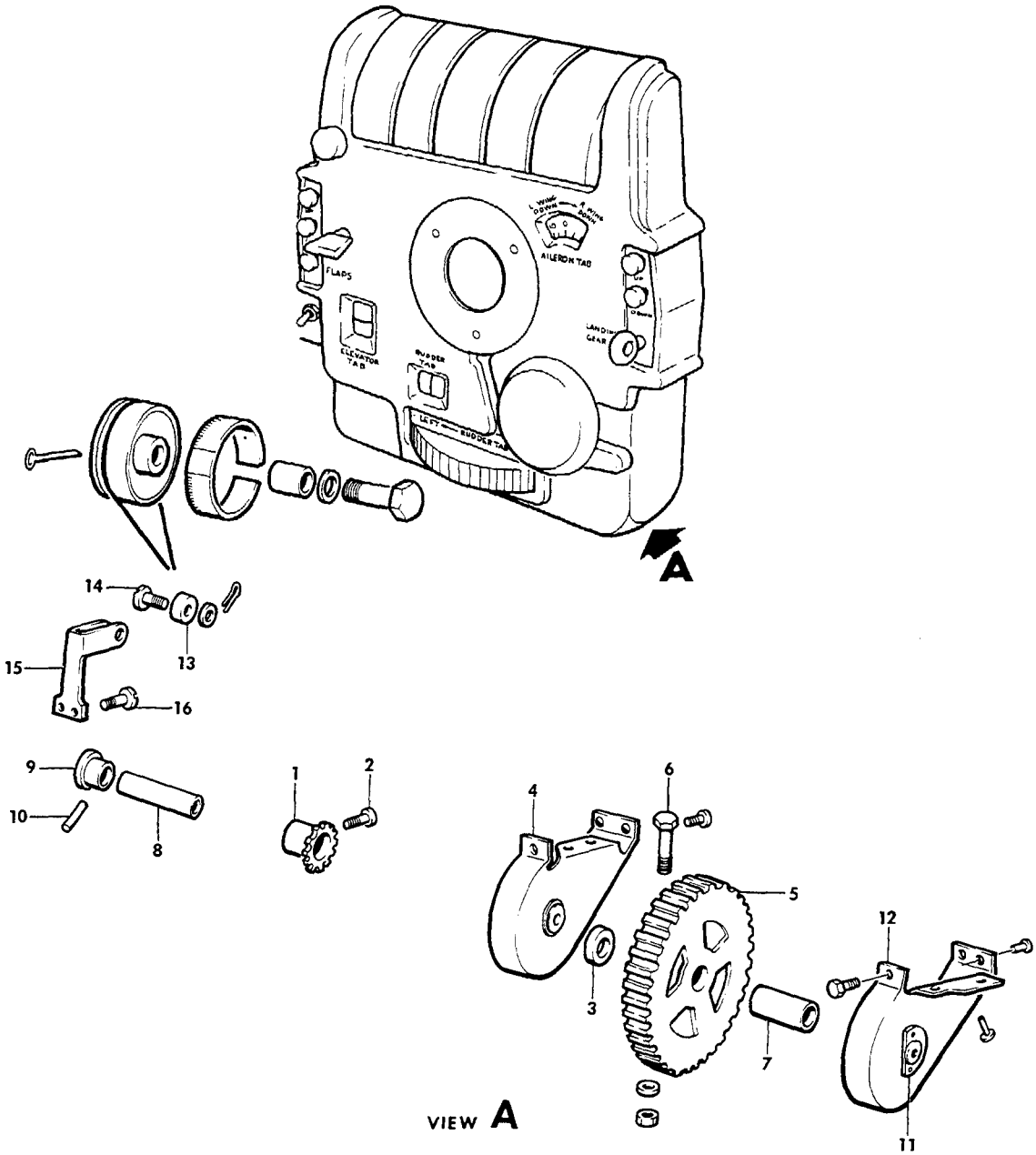

55-152-11

FIGURE 30-20.ELEVATOR TRIM TAB CONTROLS,CONSOLE
/SHEET 1 OF 2 SHEETS/

ATA CODE & INDEX NO.	PART NO.	DESCRIPTION 1 2 3 4 5 6 7	UNITS PER ASSY	USABLE ON CODE
30-20	95-324006-650	CONSOLE ASSY/ELEVATOR TAB CONTROLS/	1	1
	96-324035-601	CONSOLE ASSY/ELEVATOR TAB CONTROLS/	1	2
	96-324055	CONSOLE ASSY/ELEVATOR TAB CONTROLS/	1	3
	58-324025-605	CONSOLE ASSY/ELEVATOR TAB CONTROLS/	1	4
		NOTE THIS IS NOT A COMPLETE CONSOLE ASSY. THIS FIGURE LISTS ONLY THOSE PARTS APPLICABLE TO ELEVATOR TAB CONTROLS AT THE CONSOLE.		
	95-524025	. CONTROL ASSY,ELEVATOR TAB	1	
- 1	95-524023-5	. . SPROCKET	1	
		/ATTACHING PARTS/		
- 2	AN3-7A/M/	. . BOLT	1	
	AN960-10L	. . WASHER	1	
	MS20364-1032	. . NUT	1	
	95-524025-1	. . BRACKET ASSY	1	
- 3	50-320032	. . . BEARING	1	
	22A17-02	. . . NUTPLATE	1	
- 4	95-524025-3	. . . BRACKET	1	
- 5	35-524542-10	. . WHEEL ASSY	1	
		/ATTACHING PARTS/		
- 6	AN173A16	. . BOLT	1	
	AN960-10	. . WASHER	1	
	MS20365-1032	. . NUT	1	
- 7	50-524200-4	. . BUSHING	1	
- 8	95-524025-7	. . SHAFT	1	
- 9	50-524199	. DRUM,INDICATOR CABLE	1	
		/ATTACHING PARTS/		
- 10	52-032-156-0562	. PIN	1	
- 11	58-324025-37	. BEARING,ELEVATOR TAB CONTROL	1	
- 12	50-524196-2	. BRACKET ASSY,ELEVATOR TAB CONTROL	1	
- 13	35-524553	. PULLEY,INDICATOR CABLE TENSION IDLER	2	
		/ATTACHING PARTS/		
- 14	AN392-15	. PIN	1	
	AN960-6	. WASHER	1	
	MS24665-132	. PIN,COTTER	1	
- 15	35-524554	. BRACKET,CABLE TENSION PULLEY	1	
		/ATTACHING PARTS/		
- 16	AN515-6R6	. SCREW	2	
	AN960-6	. WASHER	2	
	MS20365-632	. NUT	2	

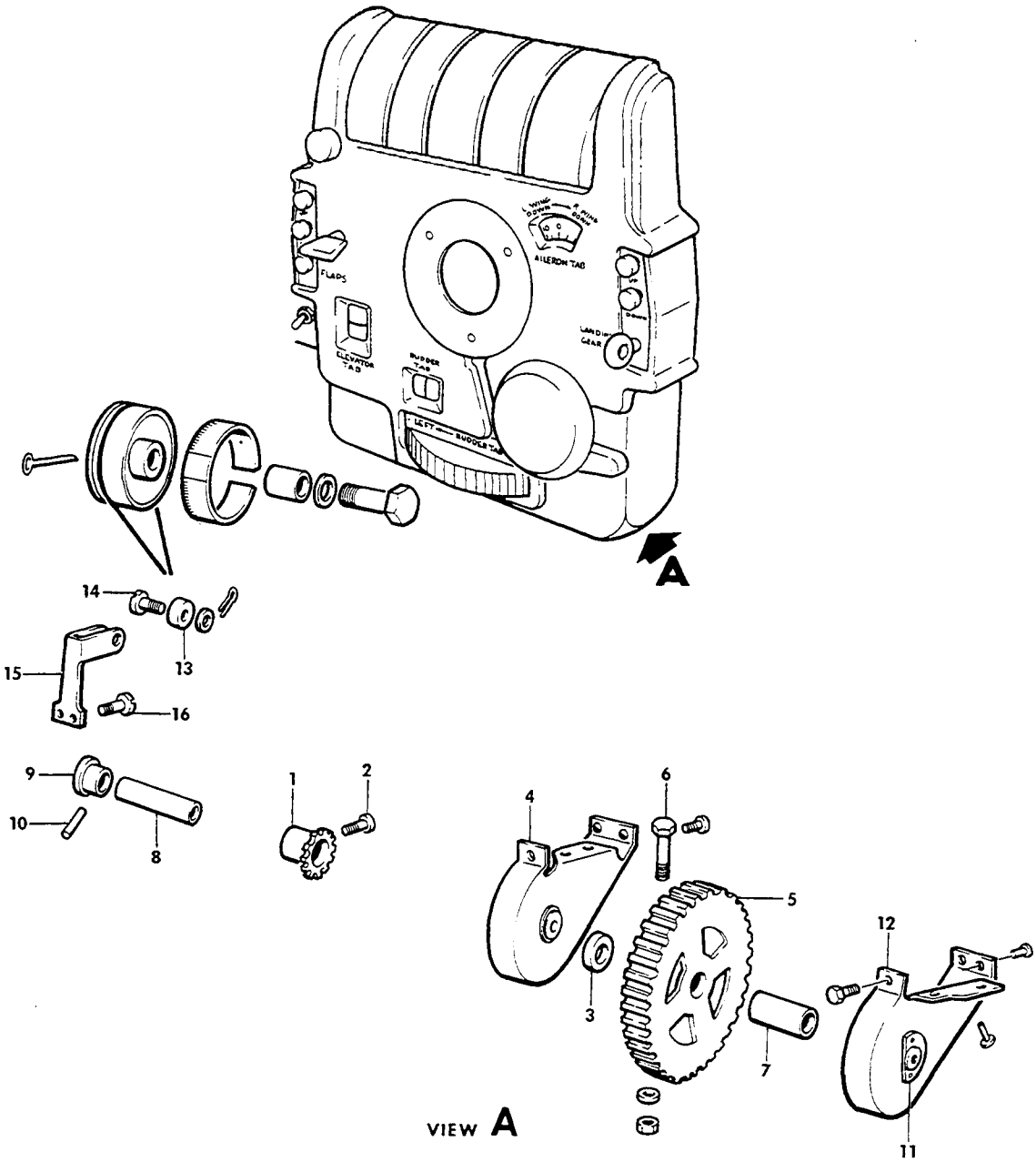

55-152-11

FIGURE 30-20.ELEVATOR TRIM TAB CONTROLS,CONSOLE
/SHEET 1 OF 2 SHEETS/

ATA CODE & INDEX NO.	PART NO.	DESCRIPTION 1 2 3 4 5 6 7	UNITS PER ASSY	USABLE ON CODE
30-20 - 17	95-524030	. PLACARD,ELEVATOR TAB INDICATOR.	1	5
	96-524035	. PLACARD,ELEVATOR TAB INDICATOR.	1	6
	95-524029	. INDICATOR ASSY,ELEVATOR TAB	1	5
	96-524034-601	. INDICATOR ASSY,ELEVATOR TAB	1	6
		/ATTACHING PARTS/		
- 18	AN3-17A/M/	. BOLT.	1	
- 19	AN936A10	. WASHER,LOCK	1	
		----*----		
- 20	50-524045-8	. . CABLE,TAB ACTUATOR.	1	
		/ATTACHING PARTS/		
- 21	MS24665-130	. PIN,COTTER.	1	
		----*----		
- 22	105740X-YY1333	. . BUSHING	1	
- 23	50-524045-2	. . DRUM.	1	
- 24	96-324036-603	. GLASS,ELEVATOR TAB INDICATOR.	2	7
	96-324041	. . PLACARD	1	7
- 25	96-324043	. PLACARD,ELEVATOR TAB CONTROL.	1	7
- 26	50-524223-3	. DECAL,ELEVATOR TAB CONTROL WHEEL.	1	

CODES OF EFFECTIVITY

1 TC-1 THRU TC-190

2 TC-191 THRU TC-1607
EXCEPT TC-350

3 TE-1 THRU TE-767
AND TC-350

4 TE-768 THRU TE-942
EXCEPT TE-938

5 TC-1 THRU TC-1143
TE-1 THRU TE-617

6 TC-1144 THRU TC-1607
TE-618 THRU TE-942
EXCEPT TE-938

7 TC-191 THRU TC-1607
TE-1 THRU TE-942
EXCEPT TE-938

"END"

27-30-30
ELEVATOR ELECTRIC TRIM TAB CONTROL
TE-633 THRU TE-937,TE-939 THRU TE-942

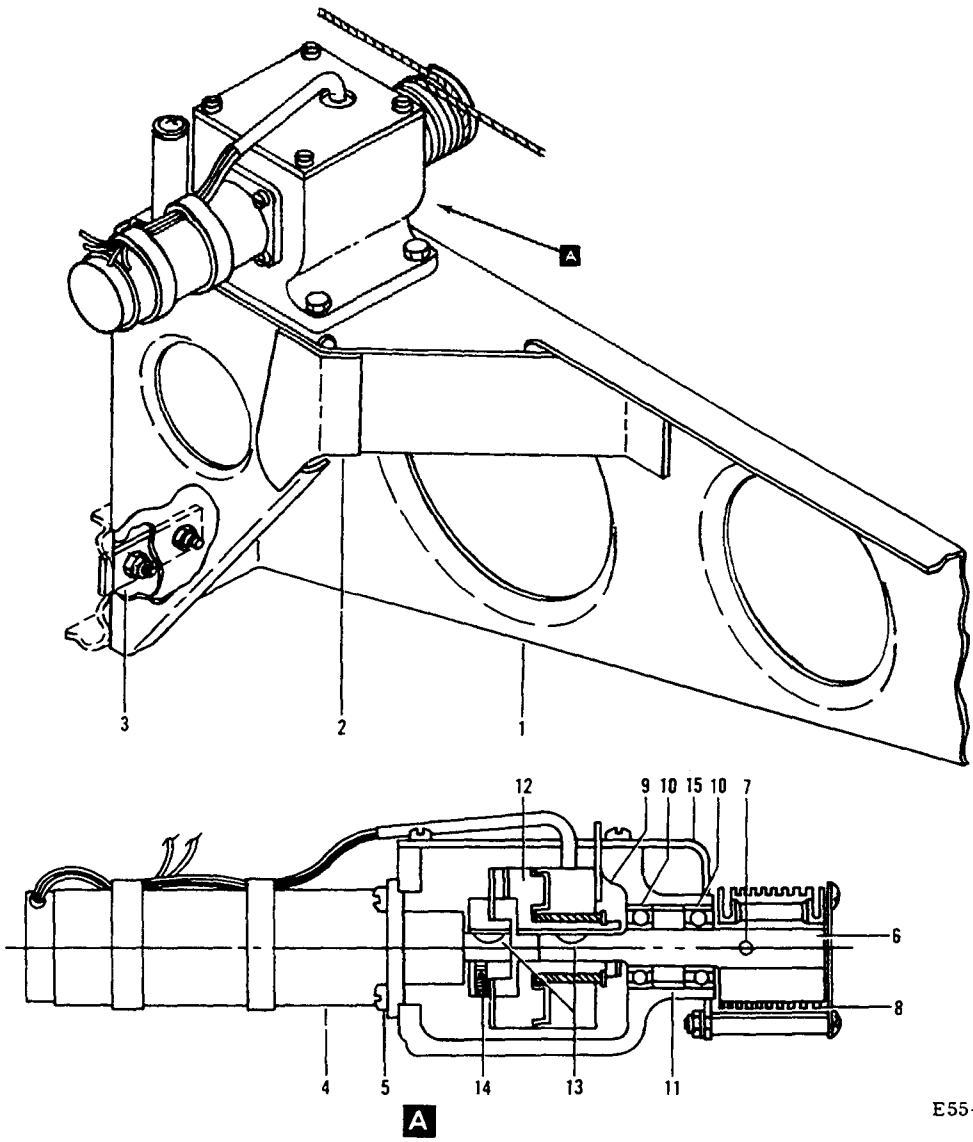

FIGURE 30-30.ELEVATOR ELECTRIC TRIM TAB CONTROL
/SHEET 1 OF 2 SHEETS/

SUB-SECT UNIT & ITEM NO.	PART NO.	DESCRIPTION 1 2 3 4 5 6 7	UNITS PER ASSY	USABLE ON CODE
30-30	R 96-524031	TRIM CONTROL INSTL,ELEVATOR ELECTRIC.	NP	2
	R 96-524031-31	TRIM CONTROL INSTL,ELEVATOR ELECTRIC.	NP	3
	96-524031-35	. BRACKET ASSY.	1	1
- 1	96-524031-1	. . BRACKET	1	1
- 2	96-524031-5	. . ANGLE	1	1
	MF1000-3	. . NUTPLATE.	3	1
- 3	96-524031-3	. PLATE	1	1
		/ATTACHING PARTS/		
	AN3-4A/M/	. BOLT.	2	
	MS20365-1032	. NUT	2	
		----*----		
	R 33-524023-51	. ACTUATOR ASSY/SPARES FOR 33-524023-5 & -23/ .	1	1
		/ATTACHING PARTS/		
	AN3-6A/M/	. BOLT.	3	
		----*----		
- 4	319A209-1	. . MOTOR ASSY.	1	1
		/ATTACHING PARTS/		
- 5	AN500A8-6	. . SCREW	4	
	AN960-67	. . WASHER.	4	
		----*----		
- 6	33-524025	. . SHAFT	1	1
- 7	NAS561PF4-15	. . PIN	1	1
- 8	50-524587	. . DRUM.	1	1
- 9	50-524497-1	. . BODY,ACTUATOR	1	1
- 10	MS20201KP6A	. . BEARING	2	1
- 11	33-524023-11	. . BUSHING	1	1
- 12	50-380125	. . CLUTCH.	1	1
- 13	206	. . KEY,WOODRUFF.	2	1
- 14	AN565A61-4	. . SCREW,SET	1	1
- 15	33-524024	. . COVER,ACTUATOR.	1	1
		/ATTACHING PARTS/		
	AN500A8-6	. . SCREW	4	
		----*----		

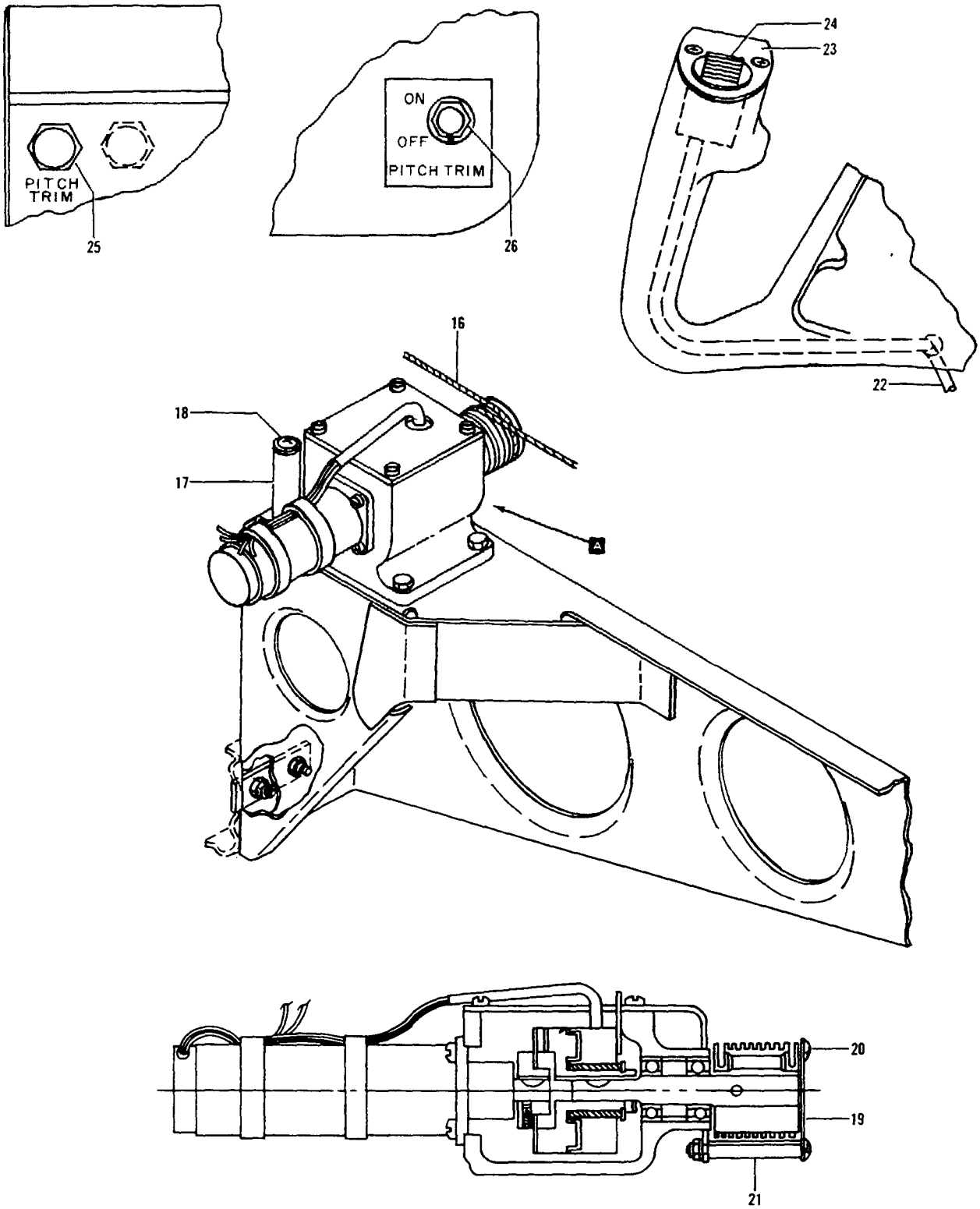

FIGURE 30-30. ELEVATOR ELECTRIC TRIM TAB CONTROL
/SHEET 2 OF 2 SHEETS/

SUB-SECT UNIT & ITEM NO.	PART NO.	DESCRIPTION 1 2 3 4 5 6 7	UNITS PER ASSY	USABLE ON CODE
30-30	96-524031-7	CABLE ASSY.	1	1
- 16	NAS312-37-0843	CABLE	1	1
	50-524495-29	KEEPER.	1	1
	96-524031-15	CABLE ASSY.	1	1
	96-524031-17	CABLE	1	1
	96-524000-25	CABLE	1	1
	95-524000-27	CHAIN	1	1
	C4189	LINK,CHAIN.	2	1
- 17	0366	RESISTOR.	1	1
		/ATTACHING PARTS/		
- 18	AN520-10R40	SCREW	1	
	6000	WASHER,CENTERING.	2	
	6011	WASHER,MICA	2	
	MS20365-1032	NUT	1	
		----*----		
	4587	RESISTOR.	1	1
- 19	96-524033	PLATE,CABLE GUARD	1	1
		/ATTACHING PARTS/		
- 20	AN515-6R28	SCREW	4	
	AN960-6L	WASHER.	4	
- 21	100696P-ZB114	SPACER.	4	
	MS-20365-632	NUT	4	
		----*----		
- 22	96-524031-11	CORD,COILED	1	1
- 23	R 96-524031-9	PLATE,LH GRIP/PILOT CONTROL WHEEL/.	1	2
	R 58-500047-35	PLATE ASSY,LH GRIP.	1	3
		/ATTACHING PARTS/		
	NAS387-44C-4P	SCREW	2	
		----*----		
- 24	26006	SWITCH,ELECTRIC TRIM/PILOT CONTROL WHEEL/	1	1
	96-524031-13	SPACER,ELECTRIC TRIM SWITCH	1	1
	R D7270-5-3	CIRCUIT BREAKER/SIDE PANEL/	1	2
- 25	R MS24510-3	CIRCUIT BREAKER/SIDE PANEL/	1	4
	R 7277-2-3	CIRCUIT BREAKER/SIDE PANEL/	1	5
- 26	R MST105D	SWITCH,ELECTRIC TRIM/FLOATING PANEL/.	1	3
	R 58-524027	PLACARD	1	3

CODES OF EFFECTIVITY

1 TE-633 THRU TE-937
TE-939 THRU TE-942

2 TE-633 THRU TE-767

3 TE-768 THRU TE-937
TE-939 THRU TE-942

4 TE-768 THRU TE-841

5 TE-842 THRU TE-937
TE-939 THRU TE-942

27-50-01
FLAP MECHANISM INSTALLATION

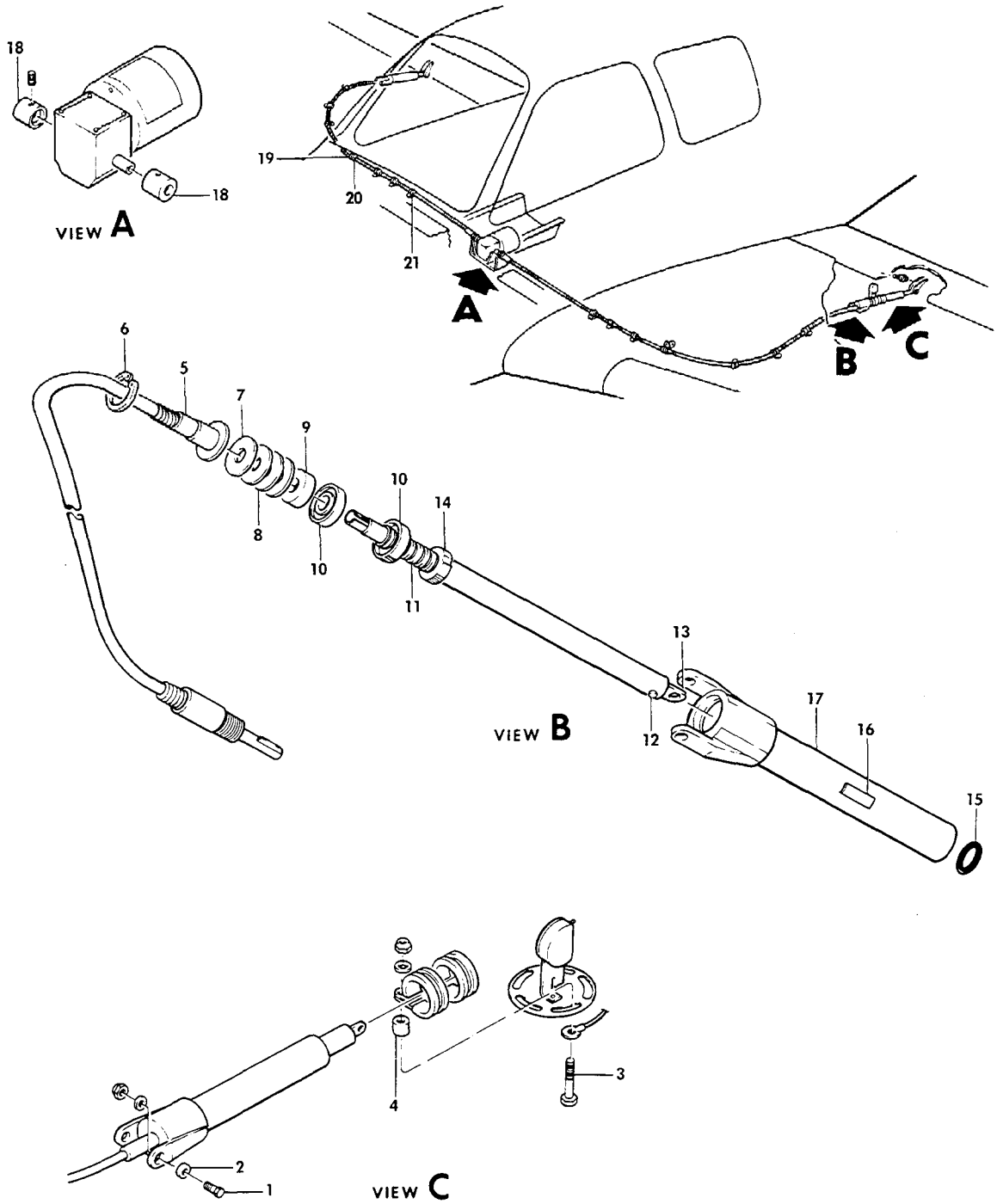

FLAP MECHANISM INSTALLATION
/SHEET 1 OF 2 SHEETS/

SUB-SECT UNIT & ITEM NO.	PART NO.	DESCRIPTION 1 2 3 4 5 6 7	UNITS PER ASSY	USABLE ON CODE
50-01	R 95-520012	CONTROL INSTALLATION,WING FLAP.	NP	
	R 45-521212-17	. ACTUATOR ASSY,FLAP LH	1	
	R 45-521212-18	. ACTUATOR ASSY,FLAP RH	1	
		/ATTACHING PARTS/		
- 1	R 130909834	. BOLT,ACTUATOR TO WING	2	
- 2	R 105739S-YH0230	. BUSHING	2	
	R AN960-416L	. WASHER.	3	
	R 130909N32	. NUT	3	
- 3	R 130909838	. BOLT,ACTUATOR TO FLAP	1	
- 4	R 100801S5-0500	. BUSHING,ACTUATOR TO FLAP.	1	
		----*----		
- 5	R 12527Y63 31	. . FLEX SHAFT & CASING ASSY,LH	1	
	R 12163Y63 31	. . FLEX SHAFT & CASING ASSY,RH	1	
- 6	R NAS50-112	. . HOLDER,BRUSH.	1	
- 7	R 35-521230-2	. . SPACER.	1	
- 8	R 35-521230	. . SPACER /MAXIMUM OF 7/	AR	
- 9	R 90-380020-3	. . SEAL/ALTERNATE FOR 90-380020-1.	1	
	R 90-380020-1	. . SEAL/ALTERNATE FOR 90-380020-3/	1	
		NOTE WHEN 90-380020-1 SEAL IS FURNISHED AS REPLACEMENT FOR 90-380020-3 SEAL,FURNISH TWO ADDITIONAL 35-521230 SPACERS.		
- 10	R S5S	. . BEARING	2	
- 11	R 45-521216	. . SCREW,FLAP ACTUATOR LH.	1	
	R 45-521216-1	. . SCREW,FLAP ACTUATOR RH.	1	
- 12	R 45-521212-2	. . PIN	1	
- 13	R 35-521215	. . PLUG.	1	
- 14	R 45-521214	. . PISTON,LH	1	
	R 45-521214-1	. . PISTON,RH	1	
- 15	R AN6227-13	. . SEAL.	1	
- 16	R 131052-1	. . PLACARD	1	
- 17	R 35-521213-3	. . HOUSING	1	
- 18	R 50-361131	. RETAINER ASSY,FLEX SHAFT.	2	
	R MS51021-42	. . SCREW,SET	1	
- 19	R MS35489-17	. GROMMET	4	
- 20	R AN742D9C	. CLAMP,LH ONLY	1	
		/ATTACHING PARTS/		
	R AN520-10-8	. SCREW	1	
	R AN960-10L	. WASHER.	1	
	R 130909N29	. NUT	1	
		----*----		
- 21	R MS21919DG8	. CLAMP	2	
		/ATTACHING PARTS/		
	R AN520-10-10	. SCREW	1	
	R 100696A-ZC008	. SPACER.	1	
	R AN960-10L	. WASHER.	1	
	R 130909N29	. WASHER,THRUST	1	
		----*----		

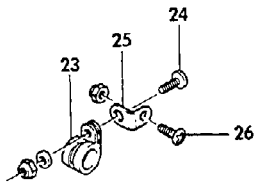

VIEW B

VIEW C

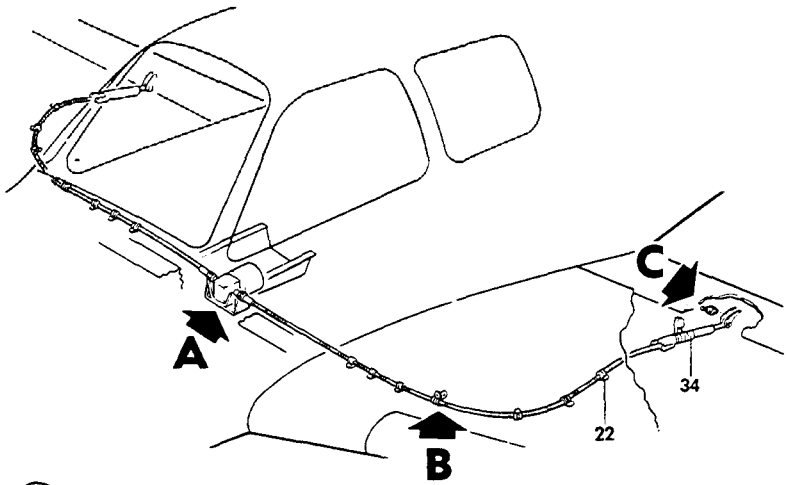

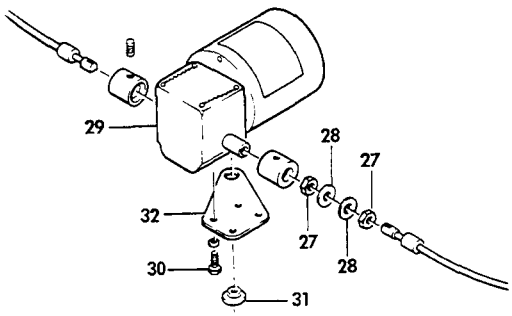

VIEW A

55-161-6

FLAP MECHANISM INSTALLATION
/SHEET 2 OF 2 SHEETS/

SUB-SECT UNIT & ITEM NO.	PART NO.	DESCRIPTION 1 2 3 4 5 6 7	UNITS PER ASSY	USABLE ON CODE
50-01 - 22	R MS21919DG8	. CLAMP	6	
		/ATTACHING PARTS/		
	R AN520-10-8	. SCREW	1	
	R AN960-10L	. WASHER.	1	
	R 130909N29	. NUT	1	
		----*----		
- 23	R MS21919DG8	. CLAMP	1	
		/ATTACHING PARTS/		
- 24	R AN520-10-10	. SCREW	1	
	R AN960-10L	. WASHER.	1	
	R 130909N29	. NUT	1	
		----*----		
- 25	R AN743-12	. CLIP.	1	
		/ATTACHING PARTS/		
- 26	R AN515-8-8	. SCREW	1	
	R 130909N28	. NUT	1	
		----*----		
- 27	R AN3066-4	. NUT,FLEX SHAFT TO MOTOR SUPPORT STRUCTURE . .	4	
- 28	R AN960-1016L	. WASHER.	4	
- 29	R 35-364151-57	. MOTOR AND GEARBOX ASSY,FLAP	1	
		/SEE CHAPTER 27-50-10/		
		/ATTACHING PARTS/		
- 30	R MS20074-03-03	. BOLT.	4	
	R AN960-10L	. WASHER.	4	
		----*----		
	R 35-810132	. SUPPORT ASSY,FLAP MOTOR & LANDING GEAR. . . .	1	
		ACTUATOR/UPPER/		
- 31	R 35-810133	. . BUSHING	1	
- 32	R 35-810132-2	. . SUPPORT	1	
- 33	R 2194	. BUMPER,FLAP STOP.	2	
		/ATTACHING PARTS/		
	R AN515-8R18	. SCREW	1	
	R 105090CR032-3E	. WASHER.	1	
	R AN960-8L	. WASHER.	1	
	R AN340-832	. NUT,LOCKING	1	
	R MS21042L08	. NUT	1	
		----*----		
- 34	R 35-160025-1	. FLAP POSITION TRANSMITTER INSTALLATION. . . .	NP	
		/SEE CHAPTER 27-50-30/		

27-50-10
FLAP MOTOR AND GEARBOX

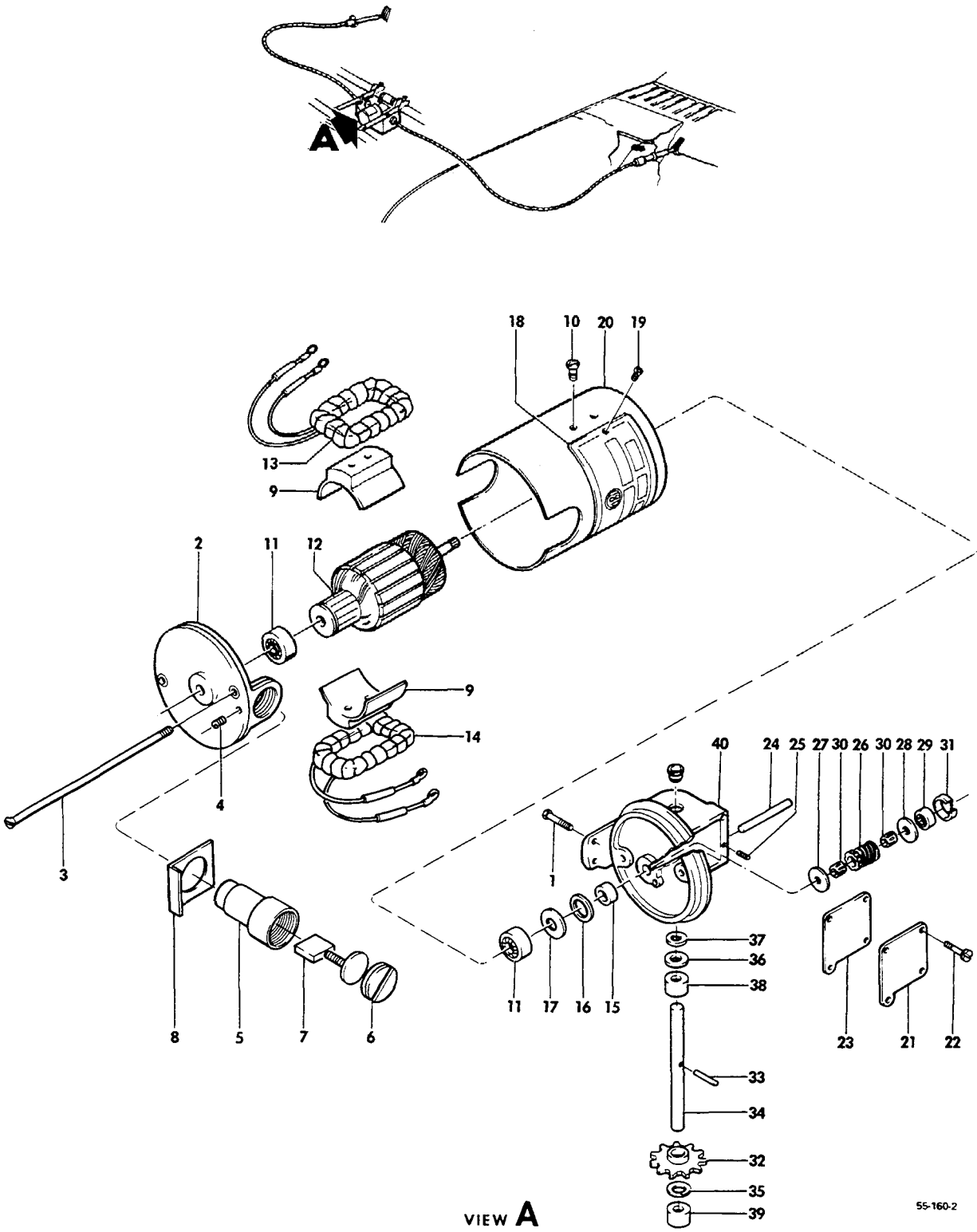

FIGURE 50-10.FLAP MOTOR AND GEARBOX

SUB-SECT UNIT & ITEM NO.	PART NO.	DESCRIPTION 1 2 3 4 5 6 7	UNITS PER ASSY	USABLE ON CODE
50-10	R 35-364151-57	MOTOR AND GEARBOX ASSY,FLAP	1	
		/ATTACHING PARTS/		
- 1	AN73A3	BOLT.	4	
	AN960-10L	WASHER.	4	
		----*----		
- 2	35-364151-3	. HOUSING,BRUSH	1	
- 3	AN505-832-46	. SCREW	2	
	35-364151-61	. HOLDER ASSY,BRUSH	2	
		/ATTACHING PARTS/		
- 4	AN565D632H3	. SCREW,SET	2	
		----*----		
- 5	S22011-0E4	. . HOLDER,BRUSH.	1	
- 6	S41007-004	. . CAP	1	
- 7	SK162	. BRUSH,FLAP MOTOR.	2	
- 8	35-364151-41	. INSULATOR,BRUSH	2	
- 9	35-364151-21	. POLE ASSY,FIELD	2	
		/ATTACHING PARTS/		
- 10	AN505-632-5	. SCREW	2	
		----*----		
- 11	ND77R4	. BEARING	2	
- 12	408-0293-233	. ARMATURE,FLAP MOTOR	1	
- 13	R901-327-20	. COIL,FIELD.	1	
- 14	R901-327-24	. COIL,FIELD.	1	
- 15	35-364151-29	. COLLAR,OIL SEAL	1	
- 16	35-364151-39	. WASHER,FELT OIL SEAL.	1	
- 17	35-364151-43	. WASHER,OIL SEAL	1	
- 18	R901-311	. PLACARD,FLAP MOTOR IDENTIFICATION	1	
		/ATTACHING PARTS/		
- 19	AN535-2-2	. SCREW	2	
		----*----		
- 20	35-364151-1	. HOUSING,MOTOR	1	
- 21	35-364151-35	. COVER,GEAR HOUSING.	1	
		/ATTACHING PARTS/		
- 22	AN500A632-4	. SCREW	4	
		----*----		
- 23	35-364151-33	. GASKET,GEAR HOUSING COVER	1	
- 24	35-364151-31	. SHAFT,COUNTER	1	
		/ATTACHING PARTS/		
- 25	NAS1081-06D4	. SCREW/SUPERSEDES AN565D632H4/	1	
		----*----		
- 26	35-364151-17	. WORM AND GEAR	1	
- 27	35-364151-47	. WASHER.	1	
- 28	35-364151-49	. WASHER,THRUST	1	
- 29	NDR4A	. BEARING,COUNTER SHAFT	1	
- 30	B36	. BEARING,WORM AND GEAR NEEDLE.	2	
- 31	35-364151-23	. CUP,BEARING	1	
	35-364151-51	. GEAR ASSY,FLAP ACTUATOR DRIVE	1	
- 32	35-364151-9	. . GEAR.	1	
		/ATTACHING PARTS/		
- 33	AN385A30-6	. . PIN,PLAIN TAPERED/SUPERSEDES AAF385-30-6/	1	
		----*----		
- 34	35-521227	. . SHAFT	1	
- 35	35-364151-45	. WASHER,THRUST	1	
- 36	AN960-616L	. WASHER.	1	
- 37	1050908005-6E	. WASHER,SHIM/MAXIMUM OF 4/	AR	
- 38	100696S-ZY017	. SPACER,GEAR SHAFT	1	
	35-364151-7	. HOUSING ASSY,FLAP MOTOR GEAR.	1	
- 39	35-364151-27	. . BEARING,SLEEVE.	1	
- 40	35-364151-5	. . HOUSING,FLAP MOTOR GEAR	1	

27-50-20
FLAP SWITCH AND POSITION INDICATOR

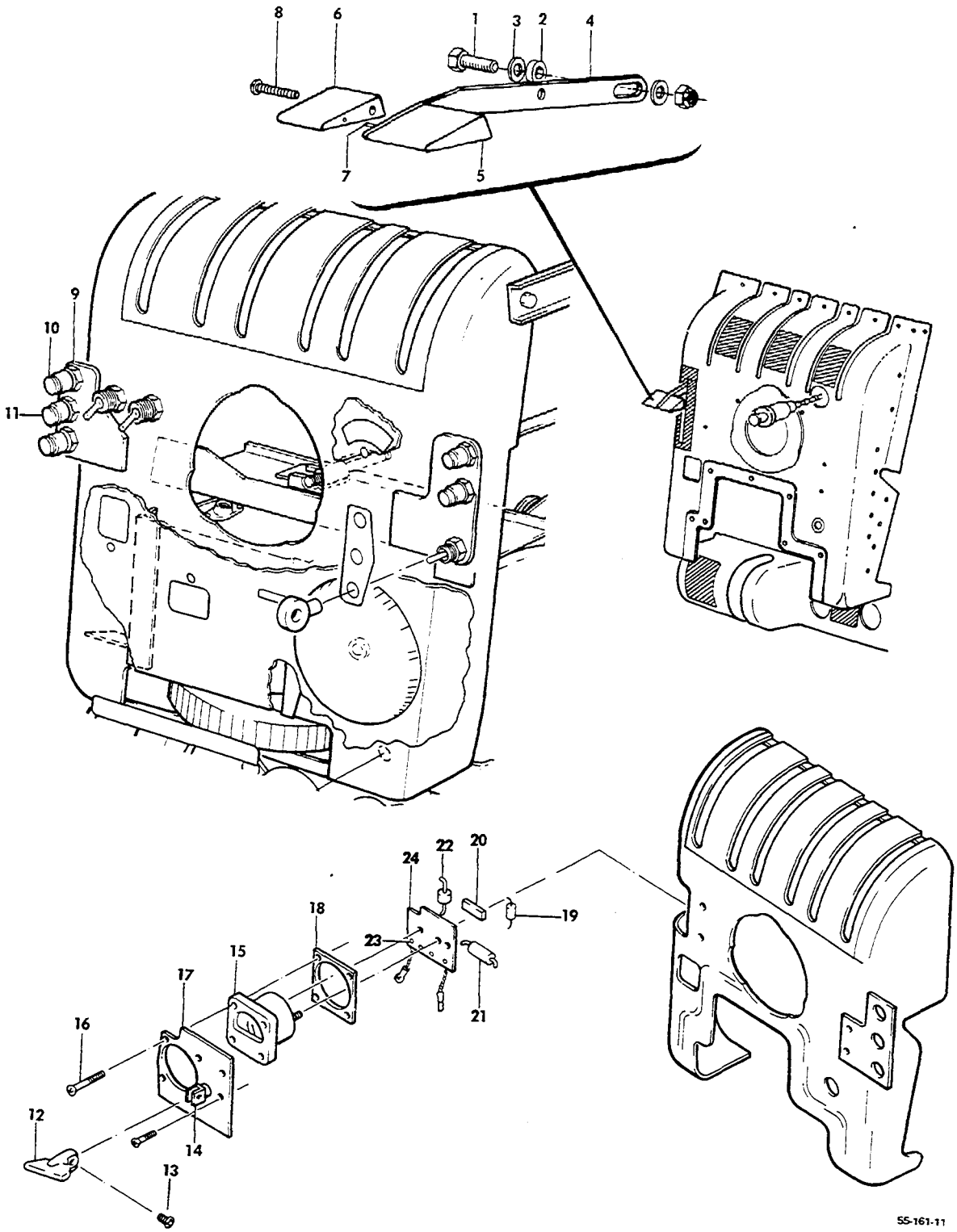

FIGURE 50-20.FLAP SWITCH AND POSITION INDICATOR
/SHEET 1 OF 3 SHEETS/

SUB-SECT UNIT & ITEM NO.	PART NO.	DESCRIPTION 1 2 3 4 5 6 7	UNITS PER ASSY	USABLE ON CODE
50-20	95-324006-105	LEVER ASSY,FLAP	1	1
		/ATTACHING PARTS/		
- 1	AN3-4	BOLT.	2	
- 2	100696X-ZC002	SPACER.	1	
- 3	102933S4ZE0093	SPACER.	1	
	AN960-10	WASHER.	2	
	AN960-10L	WASHER.	2	
	AN310-3	NUT	2	
	MS24665-134	PIN,COTTER.	2	
		----*----		
- 4	95-324006-55	. LEVER	1	1
- 5	95-324006-129	. KNOB.	1	1
- 6	95-324006-131	. KNOB.	1	1
- 7	95-324006-133	. PIN	1	1
		/ATTACHING PARTS/		
- 8	AN515-6R18	. SCREW	1	
	AN935-6L	. WASHER.	1	
		----*----		
	734-183864	SPRING,FLAP SWITCH.	1	1
	95-324006-51	BRACKET,LEVER MOUNTING.	1	1
	R AN3022-1	SWITCH,FLAP	1	1
- 9	96-324035-7	BRACKET	1	2
- 10	VM911M3H	LIGHT ASSY.	1	2
- 11	VM911M2H	LIGHT ASSY.	1	2
- 12	96-524030	LEVER,FLAP.	1	3
		/ATTACHING PARTS/		
- 13	AN565B632H3	SCREW,SET	1	
		----*----		
- 14	R 8857K40	SWITCH,FLAP	1	4
- 15	50-384001-33	INDICATOR,FLAP POSITION	1	3
		/ATTACHING PARTS/		
- 16	AN507B632R10	SCREW	4	
		----*----		
- 17	96-324035-31	BRACKET,FLAP INDICATOR & SWITCH SUPPORT	1	3
- 18	96-324055-121	SUPPORT ASSY,FLAP INDICATOR	1	3
	96-324055-119	. SUPPORT	1	3
	NAS697A06	NUT PLATE	4	3
	35-324432-603	PRINTED CIRCUIT BOARD,FLAP INDICATOR.	1	3
		/ATTACHING PARTS/		
	AN340B4	NUT/MAY BE FURNISHED WITH INDICATOR/.	2	
	AN960B4	WASHER.	4	
	AN935B4	WASHER,LOCK	2	
		----*----		
- 19	RC20GF432J	. RESISTOR.	1	3
- 20	3067P1-202	. POTENTIOMETER	1	3
- 21	RC42GF361J	. RESISTOR.	1	3
- 22	1N1520	. DIODE	1	3
- 23	1340A	. TERMINAL.	4	3
- 24	35-324438	. BOARD,PRINTED CIRCUIT	1	3

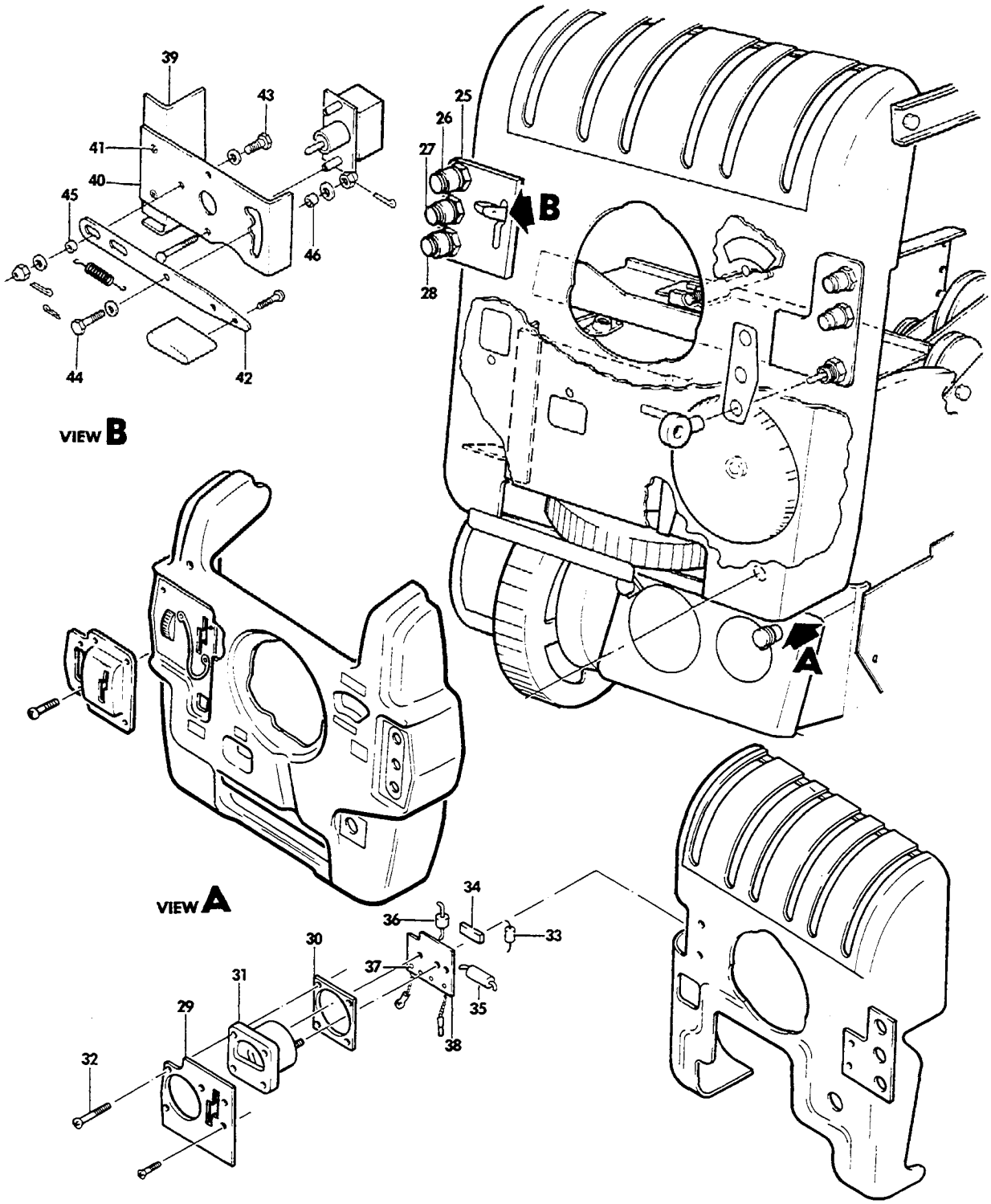

FIGURE 50-20.FLAP SWITCH AND POSITION INDICATOR
/SHEET 2 OF 3 SHEETS/

ATA CODE & INDEX NO.	PART NO.	DESCRIPTION 1 2 3 4 5 6 7	UNITS PER ASSY	USABLE ON CODE
50-20 - 25	96-324055-25	BRACKET	1	5
		/ATTACHING PARTS/		
	AN515-6R	SCREW	2	
	MK1000-632	NUTPLATE	2	
- 26	VM911M3H	INDICATOR LIGHT	1	5
- 27	VM911M4H	INDICATOR LIGHT	1	5
- 28	VM911M2H	INDICATOR LIGHT	1	5
- 29	96-324055-111	BRACKET	1	6
		/ATTACHING PARTS/		
	MS24693S27	SCREW/SUPERSEDES AN507-632R7/	2	
- 30	96-324055-121	SUPPORT ASSY,FLAP INDICATOR	1	6
	96-324055-119	. SUPPORT	1	6
	NAS697A06	. NUTPLATE	4	6
- 31	50-384001-35	INDICATOR	1	6
		/ATTACHING PARTS/		
- 32	AN5078632R10	SCREW	4	
	35-324432-603	PRINTED CIRCUIT BOARD,FLAP INDICATOR	1	6
		/ATTACHING PARTS/		
	AN340B4	NUT/MAY BE FURNISHED WITH INDICATOR/	2	
	AN960B4	WASHER	4	
	AN935B4	WASHER,LOCK	2	
- 33	RC20GF432J	. RESISTOR	1	6
- 34	3067P1-202	. POTENTIOMETER	1	6
- 35	RC42GF361J	. RESISTOR	1	6
- 36	1N1520	. DIODE	1	6
- 37	1340A	. TERMINAL	4	6
- 38	35-324438	. BOARD,PRINTED CIRCUIT	1	6
- 39	96-324055-47	BRACKET	1	7
- 40	96-324055-7	BRACKET ASSY	1	7
		/ATTACHING PARTS/		
- 41	AN515-632R	SCREW	2	
	NAS697A06	NUTPLATE	2	
- 42	96-324055-99	LEVER,FLAP SWITCH	1	7
		/ATTACHING PARTS/		
- 43	AN3-4A/M/	BOLT	1	
- 44	AN3H6/M/	BOLT	1	
- 45	100696X-ZC004	SPACER	1	
- 46	100696X-ZC006	SPACER	1	
	AN960-10L	WASHER	4	
	AN310-3	NUT	2	
	MS24665-134	PIN,COTTER/SUPERSEDES AN380-2-3/	2	

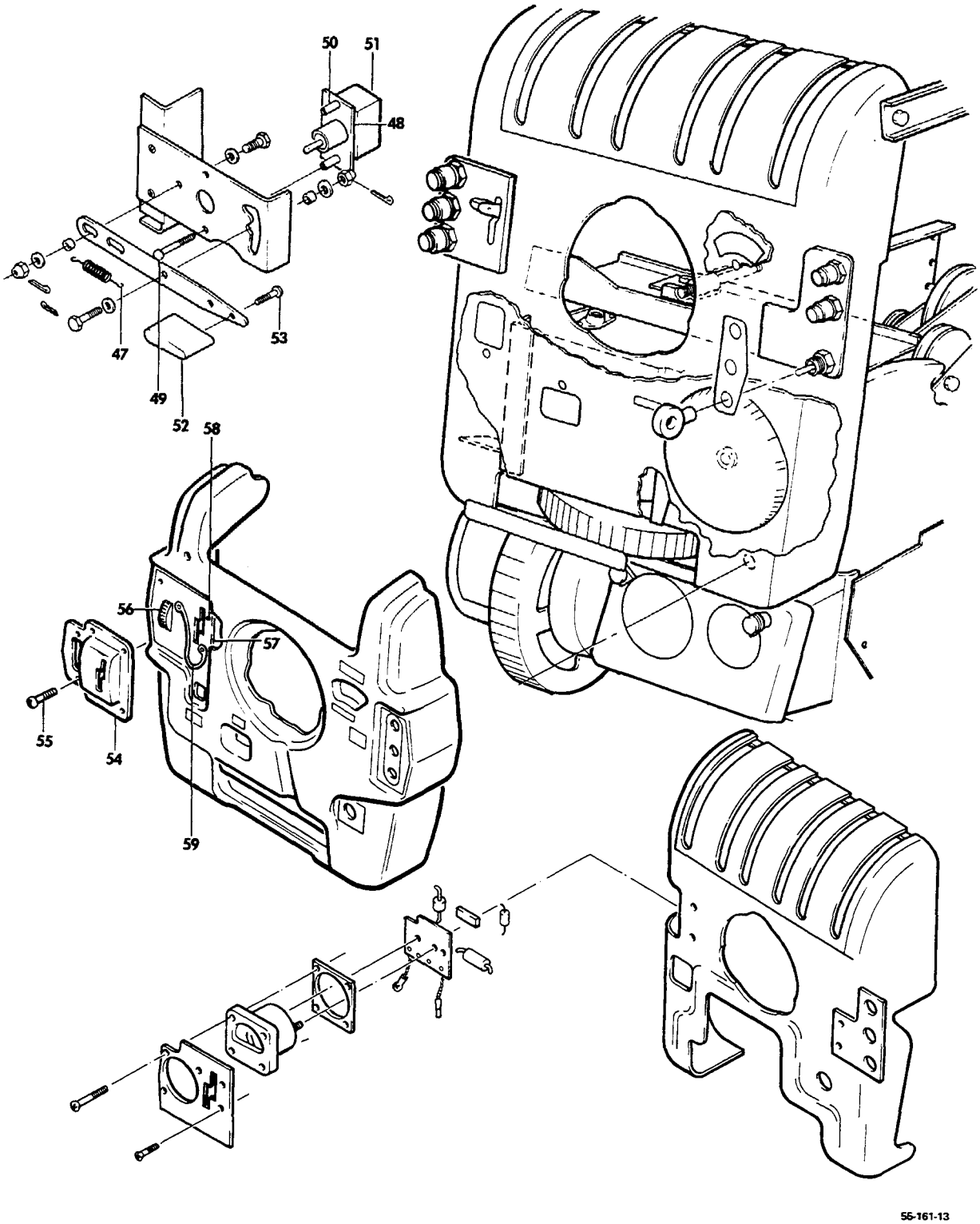

FIGURE 50-20. FLAP SWITCH AND POSITION INDICATOR
/SHEET 3 OF 3 SHEETS/

ATA CODE & INDEX NO.	PART NO.	DESCRIPTION 1 2 3 4 5 6 7	UNITS PER ASSY	USABLE ON CODE
50-20 - 47	734-183864	SPRING.	1	7
	MS24665-7	PIN,COTTER.	1	7
- 48	96-324055-13	PLATE ASSY,SWITCH MOUNTING.	1	7
		/ATTACHING PARTS/		
- 49	AN515-6R	SCREW	2	
- 50	100696F-ZB018	SPACER.	2	
	NAS697A06	NUTPLATE.	2	
		——*——		
- 51	MS25201-4	SWITCH.	1	7
- 52	96-324055-101	KNOB,FLAP CONTROL SWITCH.	1	7
		/ATTACHING PARTS/		
- 53	MS24693S27	SCREW/SUPERSEDES AN507-632R10/.	2	
		——*——		
- 54	96-324168-7	COVER,FLAP SWITCH AND INDICATOR	1	8
		/ATTACHING PARTS/		
- 55	MS35214-25	SCREW/SUPERSEDES AN515B6R6/	6	
		——*——		
- 56	60-384022	INDICATOR,FLAP POSITION	1	8
- 57	58-324031-7	DETENT PLATE ASSY	1	8
		/ATTACHING PARTS/		
- 58	MS24693S29	SCREW/SUPERSEDES AN507B632R10/.	2	
		——*——		
	NAS697A06	. NUTPLATE.	4	8
- 59	96-324057	SPRING,DETENT	1	7
		/ATTACHING PARTS/		
	105739X-ZA0060	BUSHING	2	
	AN960-4	WASHER.	2	
		——*——		

CODES OF EFFECTIVITY

1	TC-1 THRU TC-190	2	TC-191 THRU TC-1010
3	TC-1011 THRU TC-1607	4	TC-191 THRU TC-1607
5	TE-1 THRU TE-197	6	TE-198 THRU TE-767
7	TE-1 THRU TE-942 EXCEPT TE-938	8	TE-768 THRU TE-942 EXCEPT TE-938

"END"

27-50-30
FLAP POSITION TRANSMITTER,LIMIT & SAFETY SWITCHES

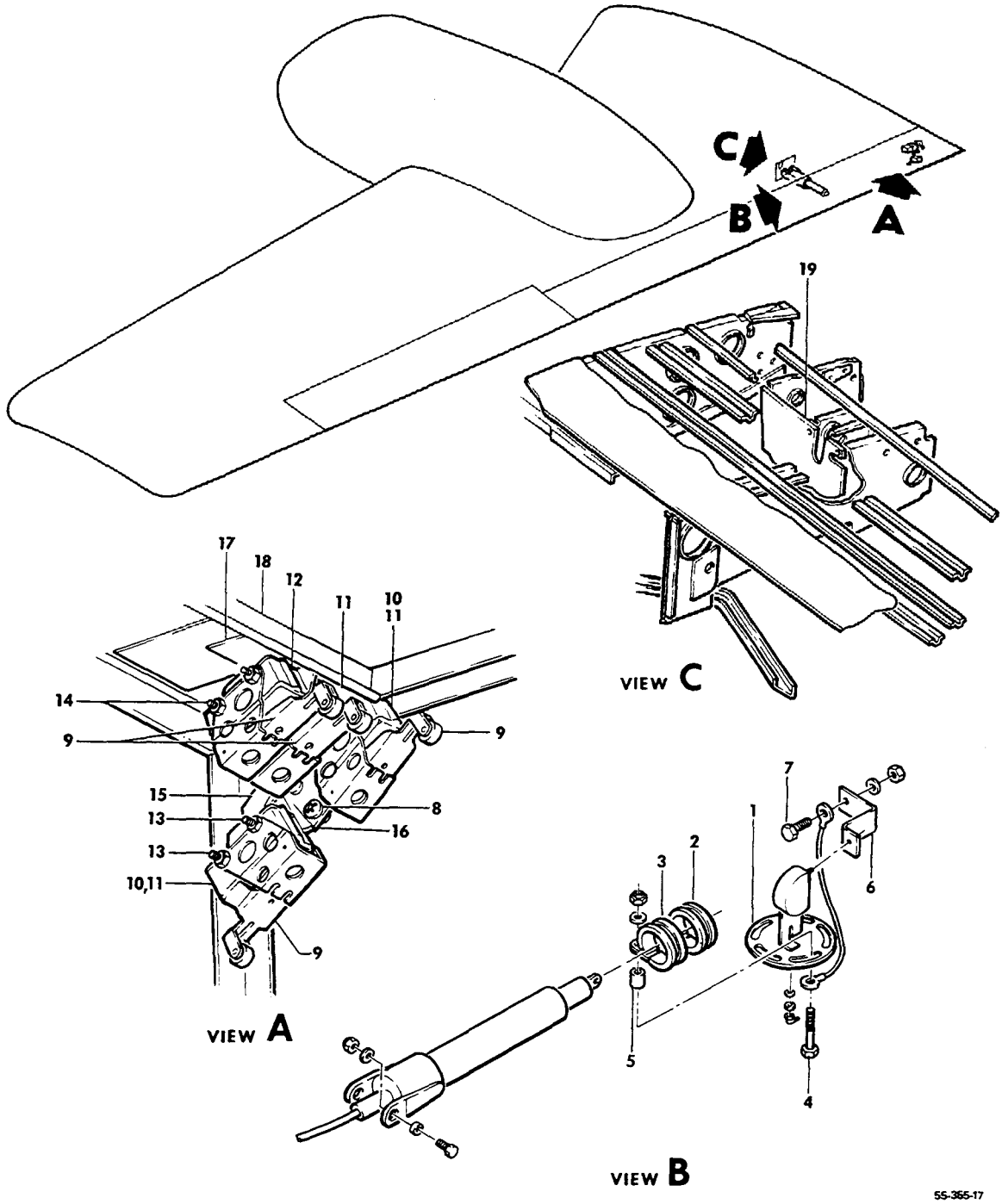

FIGURE 50-30.FLAP POSITION TRANSMITTER,LIMIT & SAFETY SWITCHES

SUB-SECT UNIT & ITEM NO.	PART NO.	DESCRIPTION 1 2 3 4 5 6 7	UNITS PER ASSY	USABLE ON CODE
50-30	35-160025-1	FLAP POSITION TRANSMITTER INSTL	NP	
- 1	58-380009	. SENSOR,FLAP POSITION.	1	
	58-380009-1	. SENSOR,FLAP POSITION/ALTERNATE FOR 58-380009/	1	
		/ATTACHING PARTS/		
- 2	MS21919DG17	. CLAMP	1	
- 3	35-160025-7	. CLAMP	1	
- 4	AN3-7A/M/	. BOLT.	2	
- 5	100696D-ZF008	. SPACER.	2	
	AN960-10	. WASHER.	2	
	MS20365-1032	. NUT	2	
- 6	35-160025-17	. GUIDE	1	
		/ATTACHING PARTS/		
- 7	AN3-5A/M/	. BOLT.	2	
	AN960-10	. WASHER.	2	
	MS20365-1032	. NUT	2	
	MS25171-15	. NIPPLE.	2	
	45-361115	SWITCH INSTL,FLAP LIMIT	NP	1
	96-361013	SWITCH INSTL,FLAP LIMIT	NP	2
	96-361011	SWITCH INSTL,FLAP LIMIT	NP	3
	96-361011-15	SWITCH INSTL,FLAP LIMIT	NP	4
	45-361116	. SWITCH ASSY,FLAP LIMIT/UP/.	1	1
R	45-361117	. SWITCH ASSY,FLAP LIMIT/DOWN/.	1	1
	96-361013-601	. SWITCH ASSY,FLAP LIMIT.	2	2
	96-361013-601	. SWITCH ASSY,FLAP LIMIT.	4	3
	96-361013-601	. SWITCH ASSY,FLAP LIMIT.	3	4
	96-361011-601	. SWITCH ASSY,FLAP LIMIT.	1	4
		/ATTACHING PARTS/		
- 8	MS35206-245	. SCREW	4	
- 9	AN3169-1	. . ACTUATOR,FLAP LIMIT SWITCH.	1	
- 10	AN3210-1	. . SWITCH,FLAP LIMIT	2	
- 11	MS25026-1	. . SWITCH,FLAP LIMIT	1	5
- 12	BZ3AT	. . SWITCH,FLAP LIMIT SAFETY.	1	4
		/ATTACHING PARTS/		
	AN515-6-18	. . SCREW	2	1
- 13	MS35206-328	. . SCREW	4	5
- 14	MS35206-237	. . SCREW	2	3
	MS35206-238	. . SCREW	2	4
		/ATTACHING PARTS/		
	AN960-6	. . WASHER.	2	
	MS2142L06	. . NUT	2	
	45-361116-1	. . BRACKET,FLAP LIMIT SWITCH MTG/FLAP UP/.	1	1
- 15	96-361011-11	. . BRACKET,FLAP LIMIT SWITCH MTG/FLAP UP/.	1	5
	45-361117-1	. . BRACKET,FLAP LIMIT SWITCH MTG/FLAP DOWN/.	1	1
- 16	96-361011-13	. . BRACKET,FLAP LIMIT SWITCH MTG/FLAP DOWN/.	1	5
	35-364238	. FISH PAPER,INSULATING/BZ3AT SWITCH BRACKET/	1	4
- 17	96-361011-7	. BRACKET,FLAP LIMIT SAFETY SWITCH.	1	6
- 18	96-361011-9	. BRACKET,FLAP LIMIT SAFETY SWITCH.	1	6
- 19	35-115264	COVER ASSY,FLAP LIMIT SWITCHES.	1	
	AN227-8B	. STUD.	9	
	AN227-6B	. BUTTON.	9	

CODES OF EFFECTIVITY

1	TC-1 THRU TC-1056 EXCEPT TC-350	2	TC-1057 THRU TC-1607
3	TC-350,TE-1 THRU TE-767	4	TE-768 THRU TE-942 EXCEPT TE-938
5	TC-1057 THRU TC-1607 TC-350,TE-1 THRU TE-942 EXCEPT TE-938	6	TC-350,TE-1 THRU TE-942 EXCEPT TE-938

27-70-01
LOCK ASSY,CONTROL SURFACE & THROTTLE

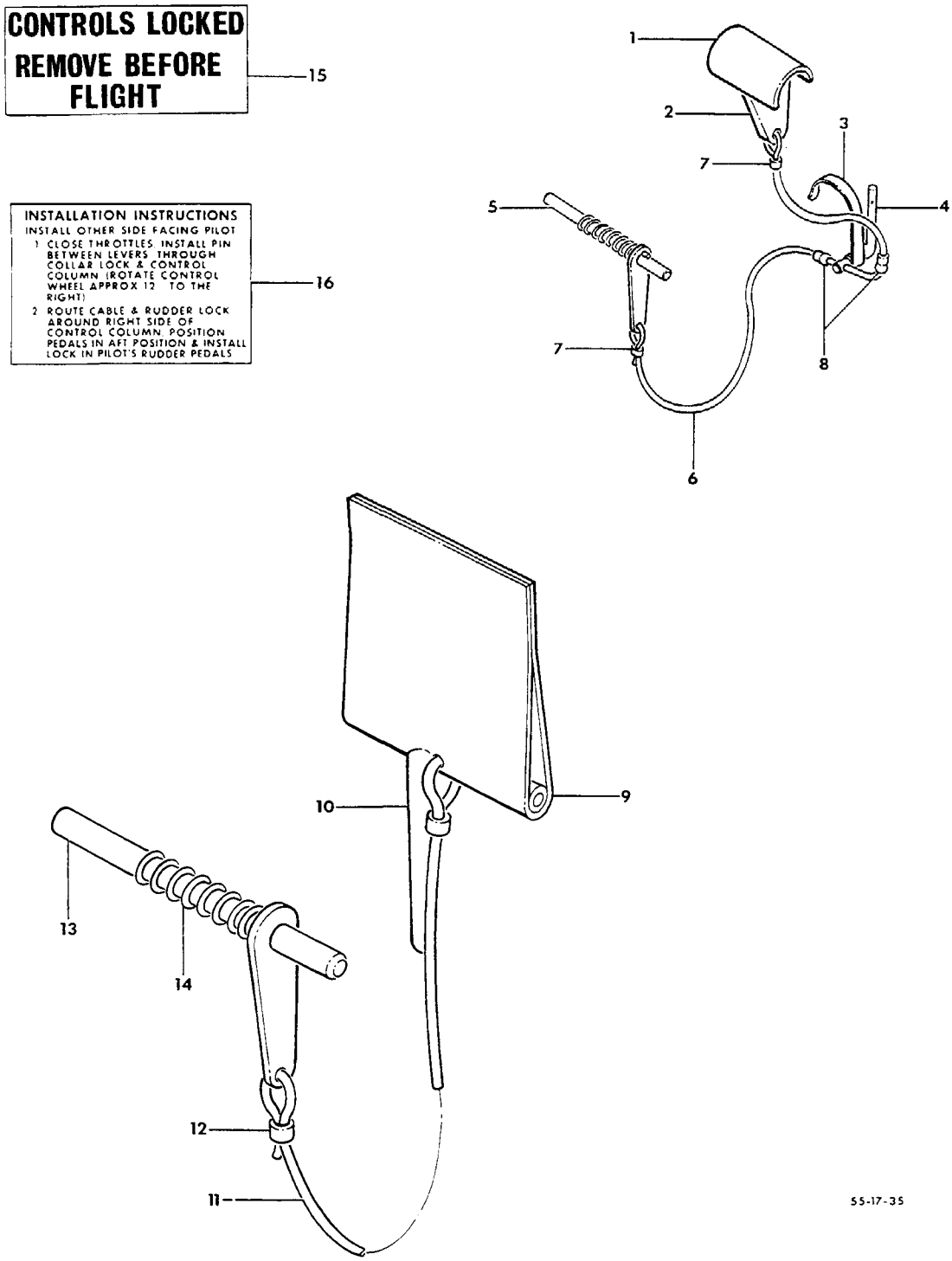

FIGURE 70-01.LOCK ASSY,CONTROL SURFACE

SUB-SECT UNIT & ITEM NO.	PART NO.	DESCRIPTION 1 2 3 4 5 6 7	UNITS PER ASSY	USABLE ON CODE
70-01	R 95-590031	LOCK ASSY,CONTROL SURFACE AND THROTTLE.	1	1
	R 95-590031-1	. STOP ASSY,CONTROL LEVER	1	1
- 1	R 95-590031-7	. . CAP	1	1
- 2	R 95-590031-9	. . ARM	1	1
	R 50-524258-3	. . DECAL/CONTROLS LOCKED/.	2	1
- 3	R 95-590032	. SPRING,CONTROL COLUMN LOCK.	1	1
- 4	R 95-590031-13	. PIN,CONTROL COLUMN LOCK	1	1
- 5	R 95-590023	. LOCK ASSY,RUDDER PEDALS	1	1
	R 95-590023-5	. . SPRING.	1	1
- 6	R 95-590031-3	. CABLE	1	1
- 7	R 34138	. CONNECTOR,PARALLEL.	2	1
- 8	R AN664-2	. BALL END.	2	1
	R 95-590031-11	. BAG,STORAGE/CLEAR PLASTIC/.	1	1
	R 58-590016-19	LOCK ASSY,CONTROL SURFACE AND THROTTLE.	1	2
- 9	R 58-590016-3	. FLAG.	1	2
- 10	R 58-590016-15	. WELD ASSY	1	2
- 11	R 58-590016-21	. CABLE	1	2
- 12	R 34138	. CONNECTOR,PARALLEL.	2	2
- 13	R 95-590023	. LOCK ASSY,RUDDER PEDAL.	1	2
- 14	R 95-590023-5	. . SPRING.	1	2
- 15	R 58-590017-3	. DECAL/CONTROLS LOCKED REMOVE BEFORE FLIGHT/ .	1	2
- 16	R 58-590018-7	. DECAL,INSTALLATION INSTRUCTIONS	1	2

CODES OF EFFECTIVITY

1	TC-1 THRU TC-1436 TC-1 THRU TE-859	2	TC-1437 THRU TC-1607 TE-860 THRU TE-937, TE-939 THRU TE-942

"END"

CHAPTER

28

FUEL

LIST OF PAGES & TABLE OF CONTENTS FOR CHAPTER 28-00-00 FUEL

CHAP/SUB-SECT & UNIT	PAGE NO.	EFFECTIVE DATE	TABLE OF CONTENTS
28-00-00	1	04/05/85	LIST OF PAGES & TABLE OF CONTENTS
28-10-01	1	03/10/78	FUEL STORAGE AND INTERCONNECT
28-10-01	2	03/10/78	
28-10-01	3	04/05/85	
28-10-01	4	03/10/78	
28-10-01	5	04/05/85	
28-10-01	6	03/10/78	
28-10-01	7	03/10/78	
28-10-10	1	03/10/78	VENT SYSTEM,FUEL STORAGE
28-10-10	2	03/10/78	
28-10-10	3	03/10/78	
28-10-10	4	03/10/78	
28-10-10	5	03/10/78	
28-10-20	1	03/10/78	FUEL CAP AND ADAPTER
28-10-20	2	03/10/78	
28-10-20	3	03/10/78	
28-10-20	4	03/10/78	
28-10-20	5	03/10/78	
28-20-01	1	03/10/78	FUEL DISTRIBUTION
28-20-01	2	03/10/78	
28-20-01	3	04/05/85	
28-20-01	4	03/10/78	
28-20-01	5	03/10/78	
28-20-01	6	03/10/78	
28-20-01	7	04/05/85	
28-20-01	8	03/10/78	
28-20-01	9	03/10/78	
28-20-01	10	03/10/78	
28-20-01	11	04/30/84	
28-20-01	12	03/10/78	
28-20-01	13	04/05/85	
28-20-50	1	03/10/78	FUEL SELECTOR VALVE
28-20-50	2	03/10/78	
28-20-50	3	03/10/78	
28-20-60	1	03/10/78	FUEL FILTER
28-20-60	2	03/10/78	
28-20-60	3	04/30/84	
28-25-10	1	03/10/78	FUEL SELECTOR PANEL
28-25-10	2	03/10/78	
28-25-10	3	04/05/85	
28-25-10	4	03/10/78	
28-25-10	5	03/10/78	
28-25-10	6	03/10/78	
28-25-10	7	04/05/85	

28-10-01
FUEL STORAGE AND INTERCONNECT

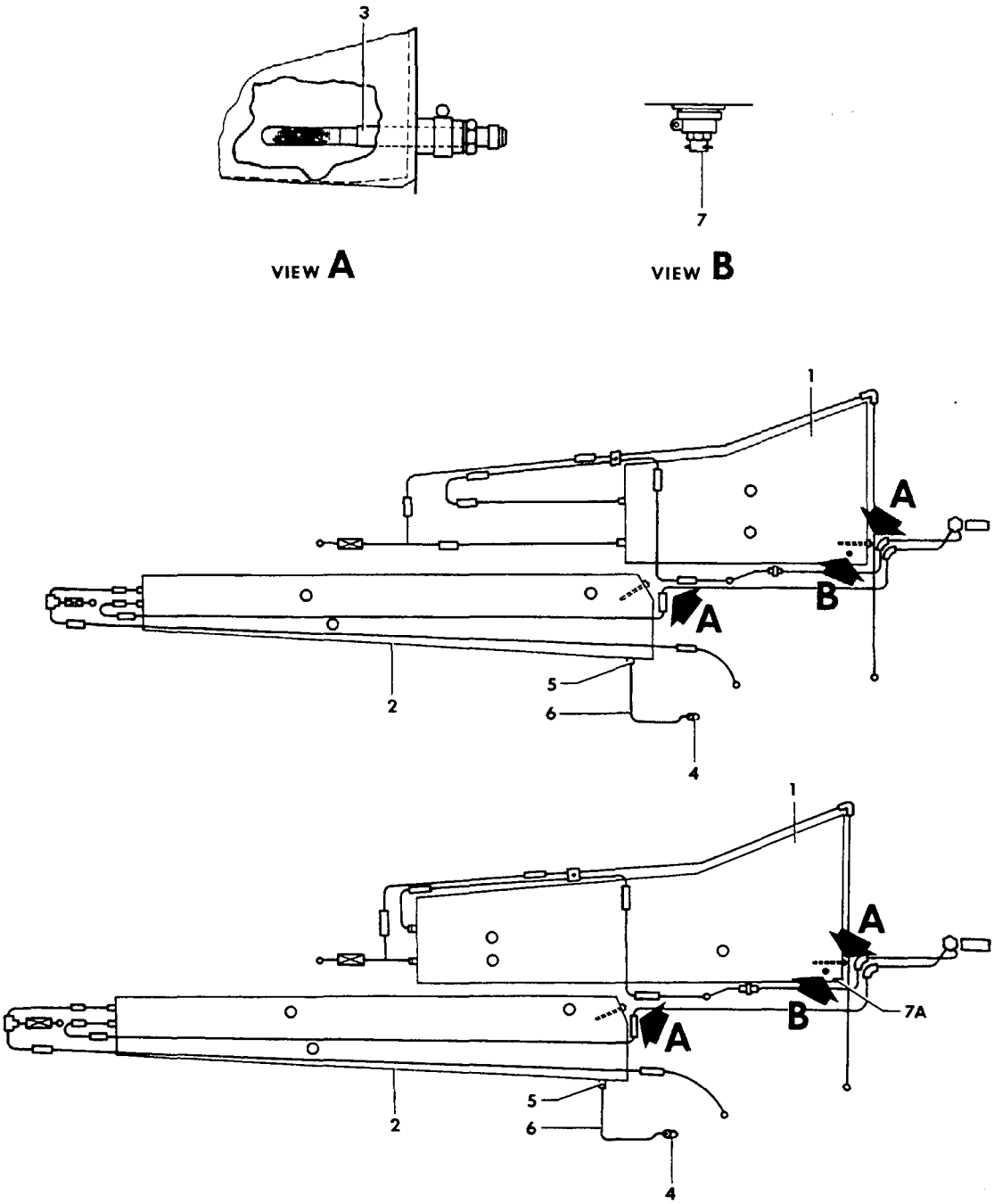

FIGURE 10-01.FUEL STORAGE AND INTERCONNECT
/SHEET 1 OF 3 SHEETS/

SUB-SECT UNIT & ITEM NO.	PART NO.	DESCRIPTION 1 2 3 4 5 6 7	UNITS PER ASSY	USABLE ON CODE
10-01	96-920001	FUEL SYSTEM INSTL,112 GALLON/STANDARD/.	NP	1
	96-920001-155	FUEL SYSTEM INSTL,140 GALLON/OPTIONAL/.	NP	1
	96-920001-231	FUEL SYSTEM INSTL,114 GALLON/STANDARD/.	NP	2
	96-920001-233	FUEL SYSTEM INSTL,142 GALLON/OPTIONAL/.	NP	2
	96-920001-283	FUEL SYSTEM INSTL,112 GALLON/STANDARD/.	NP	3
	96-920001-285	FUEL SYSTEM INSTL,142 GALLON/OPTIONAL/.	NP	3
	96-920001-265	FUEL SYSTEM INSTL,112 GALLON/STANDARD/.	NP	4
	96-920001-267	FUEL SYSTEM INSTL,142 GALLON/OPTIONAL/.	NP	4
		SEE BEECHCRAFT SERVICE INSTRUCTION 925.		
- 1	35-9009-3S	. CELL KIT,LH FUEL/25 GALLON,SUPERSEDES	1	5
		50-920008-5,-7,-9,95-380027-1,		
		96-380046-1,-3,-5		
	96-380046-7	. . CELL,LH FUEL/25 GALLON/	NP	5
	35-9009S	. . TAPE KIT,VELCRO PILE.	1	5
	35-9009-1S	. CELL KIT,LH FUEL/40 GALLON,SUPERSEDES	1	5
		35-921242-5,-7,-9,35-380135-1,-3,-5/		
	35-380135-9	. . CELL,LH FUEL/40 GALLON/	NP	5
	35-9009S	. . TAPE KIT,VELCRO PILE.	1	5
	35-9009-4S	. CELL KIT,RH FUEL/25 GALLON,SUPERSEDES	1	5
		50-920008-6,-8,-10,95-380027-2,		
		96-380046-2,-4,-6/		
	96-380046-8	. . CELL,RH FUEL/25 GALLON/	NP	5
	35-9009S	. . TAPE KIT,VELCRO PILE.	1	5
	35-9009-2S	. CELL KIT,RH FUEL/40 GALLON,SUPERSEDES	1	5
		35-921242-6,-8,-10,35-380135-2,-4,-6/		
	35-380135-10	. . CELL,RH FUEL/40 GALLON/	NP	5
	35-9009S	. . TAPE KIT,VELCRO PILE.	1	5
- 2	95-920011-13	. CELL,LH FUEL/31 GALLON, ...	1	5
		SUPERSEDES 95-920011-7		
	95-920011-9	. CELL,LH FUEL/31 GALLON, ...	1	5
		ALTERNATE FOR 95-920011-13/		
	95-380015-3	. TANK ASSY,LH FUEL/17 GALLON/.	1	12
	95-920011-14	. CELL,RH FUEL/31 GALLON, ...	1	5
		SUPERSEDES 95-920011-8/		
	95-920011-10	. CELL,RH FUEL/31 GALLON, ...	1	5
		ALTERNATE FOR 95-920011-14/		
	95-380015-4	. TANK ASSY,RH FUEL/17 GALLON/.	1	12
- 3	50-920064	. STRAINER ASSY,FUEL CELL OUTLET.	4	5
- 4	CCA485C	. VALVE,31 GALLON FUEL CELL DRAIN	2	5
	AN910-10	. COUPLING,31 GALLON FUEL TANK DRAIN TUBE . . .	2	5
	AN822-4D	. ELBOW,31 GALLON FUEL TANK DRAIN TUBE.	2	5
	MS21919DG17	. CLAMP,31 GALLON FUEL TANK DRAIN VALVE	2	5
		/ATTACHING PARTS/		
	AN520-10R8	. SCREW	2	
	AN960-10	. WASHER.	2	
	MS20365-832	. NUT	2	
- 5	AN737RM22	. CLAMP,LH & RH	1	5
- 6	96-920001-87	. TUBE ASSY,LH 31 GALLON FUEL TANK DRAIN. . . .	1	5
	96-920001-88	. TUBE ASSY,RH 31 GALLON FUEL TANK DRAIN. . . .	1	5
- 7	CCA3400	. VALVE,25 & 40 GALLON FUEL TANK DRAIN.	1	5
	35-921532	. WASHER,25 & 40 GALLON FUEL TANK DRAIN VALVE .	1	5
	35-921533	. CLAMP	1	5
	36-920022-1	. SPACER,25 & 40 GALLON FUEL TANK DRAIN	1	5
- 7A	50-920065-1	. STIFFENER	2	5

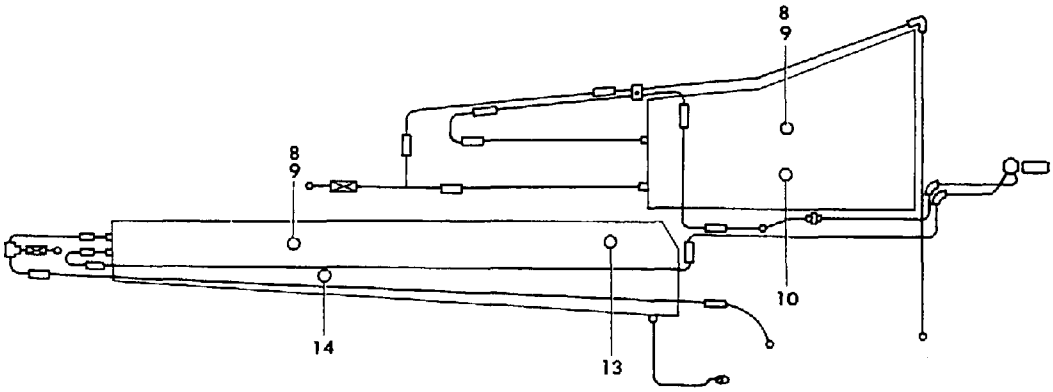

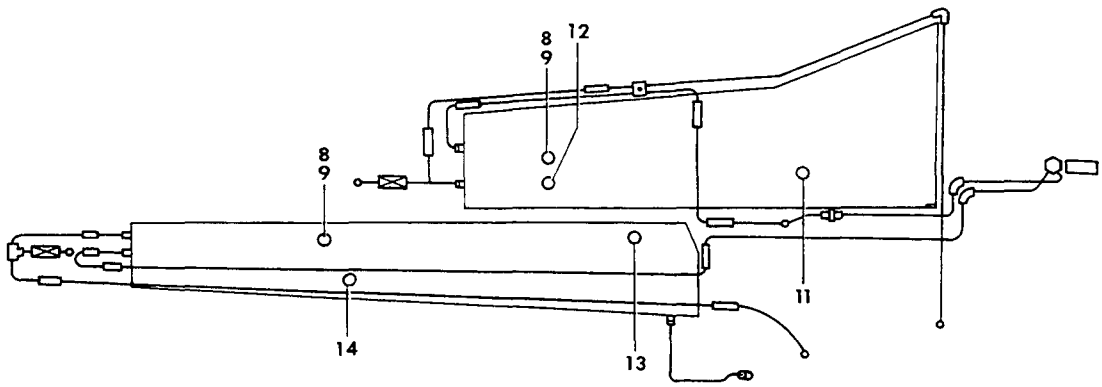

55-281-79

FIGURE 10-01.FUEL STORAGE AND INTERCONNECT
/SHEET 2 OF 3 SHEETS/

SUB-SECT UNIT & ITEM NO.	PART NO.	DESCRIPTION 1 2 3 4 5 6 7	UNITS PER ASSY	USABLE ON CODE
10-01 - 8	416-85-25	. CAP ASSY,25 & 40 GALLON L.E. FUEL CELL FILLER /SEE CHAPTER 28-10-20/	2	6
	R 416-85-31	. CAP ASSY,31 GALLON AUX FUEL CELL FILLER . . .	2	6
	96-380035	. CAP ASSY,FUEL CELL FILLER	4	7
- 9	45-921544	. ADAPTER ASSY,25 & 40 GALLON FUEL CELL . . . . FILLER CAP/SEE CHAPTER 28-10-20/	2	6
	50-921518	. ADAPTER ASSY,31 GALLON FUEL CELL. . . . . FILLER CAP/SEE CHAPTER 28-10-20/	2	6
	96-380036-3	. ADAPTER ASSY,25 & 40 GALLON FUEL CELL . . . . FILLER CAP/SEE CHAPTER 28-10-20/	2	7
	96-380036-1	. ADAPTER ASSY,31 GALLON FUEL CELL. . . . . FILLER CAP/SEE CHAPTER 28-10-20/	2	7
		/ATTACHING PARTS/		
	AN509-1032R9	. SCREW	12	
	AN74-3/M/	. BOLT.	12	
	AN960-416L	. WASHER.	12	
	AN366F1032	. NUTPLATE.	12	
		----*----		
	FCB25722	. GASKET,ADAPTER ASSY	2	5
- 10	5640556	. TRANSMITTER,25 GALLON FUEL CELL LH.	1	8
	35-380136-3	. TRANSMITTER,25 GALLON FUEL CELL LH.	1	9
	5641801	. TRANSMITTER,25 GALLON FUEL CELL RH.	1	8
	35-380136-5	. TRANSMITTER,25 GALLON FUEL CELL RH.	1	9
- 11	CB7740-116	. TRANSMITTER,40 GALLON FUEL CELL LH & RH . . . /SUPERSEDES 95-380004/	2	10
	95-380012-1	. TRANSMITTER,40 GALLON FUEL CELL LH & RH INBD.	2	11
	96-380041-1	. TRANSMITTER,40 GALLON FUEL CELL LH & RH INBD.	2	9
- 12	CB7740-112	. TRANSMITTER,40 GALLON FUEL CELL LH OUTBD. . . /SUPERSEDES 5640557/	1	10
	CB7740-110	. TRANSMITTER,40 GALLON FUEL CELL RH OUTBD. . . /SUPERSEDES 5640554/	1	10
	95-380012-3	. TRANSMITTER,40 GALLON FUEL CELL LH & RH OUTBD	2	11
	96-380042-1	. TRANSMITTER,40 GALLON FUEL CELL LH OUTBD. . .	1	9
	96-380042-3	. TRANSMITTER,40 GALLON FUEL CELL RH OUTBD. . .	1	9
- 13	CB7740-112	. TRANSMITTER,31 GALLON FUEL CELL LH INBD . . . /SUPERSEDES 5640557/	1	10
	95-380013-5	. TRANSMITTER,31 GALLON FUEL CELL LH INBD . . .	1	11
	96-380043-5	. TRANSMITTER,31 GALLON FUEL CELL LH INBD . . .	1	9
	GG5642809	. TRANSMITTER,17 GALLON FUEL CELL LH INBD . . . /SUPERSEDES 96-380043-1/	1	12
	CB7740-110	. TRANSMITTER,31 GALLON FUEL CELL RH INBD . . . /SUPERSEDES 5640554/	1	10
	95-380013-7	. TRANSMITTER,31 GALLON FUEL CELL RH INBD . . .	1	11
	96-380043-7	. TRANSMITTER,31 GALLON FUEL CELL RH INBD . . . /SUPERSEDES 96-380043-3/	1	9
	GG5642808	. TRANSMITTER,17 GALLON FUEL CELL RH INBD . . .	1	12
- 14	CB7740-113	. TRANSMITTER,31 GALLON FUEL CELL LH OUTBD. . . /SUPERSEDES 5640558	1	10
	95-380013-1	. TRANSMITTER,31 GALLON FUEL CELL LH OUTBD. . .	1	11
	96-380044-9	. TRANSMITTER,31 GALLON FUEL CELL LH OUTBD. . . /SUPERSEDES 96-380044-1 & 96-380044-5/	1	9
	CB7740-111	. TRANSMITTER,31 GALLON FUEL CELL RH OUTBD. . . /SUPERSEDES 5640555/	1	10
	95-380013-3	. TRANSMITTER,31 GALLON FUEL CELL RH OUTBD. . .	1	11
	96-380044-7	. TRANSMITTER,31 GALLON FUEL CELL RH OUTBD. . . /SUPERSEDES 96-380044-3/	1	9
		/ATTACHING PARTS/		
	AN502-10	. SCREW	5	
		----*----		
	FCA25750	. GASKET,TRANSMITTER.	8	4
	BS330865	. GROMMET/USED WITH ALL 96-380044 . . . . . TRANSMITTERS/	1	9

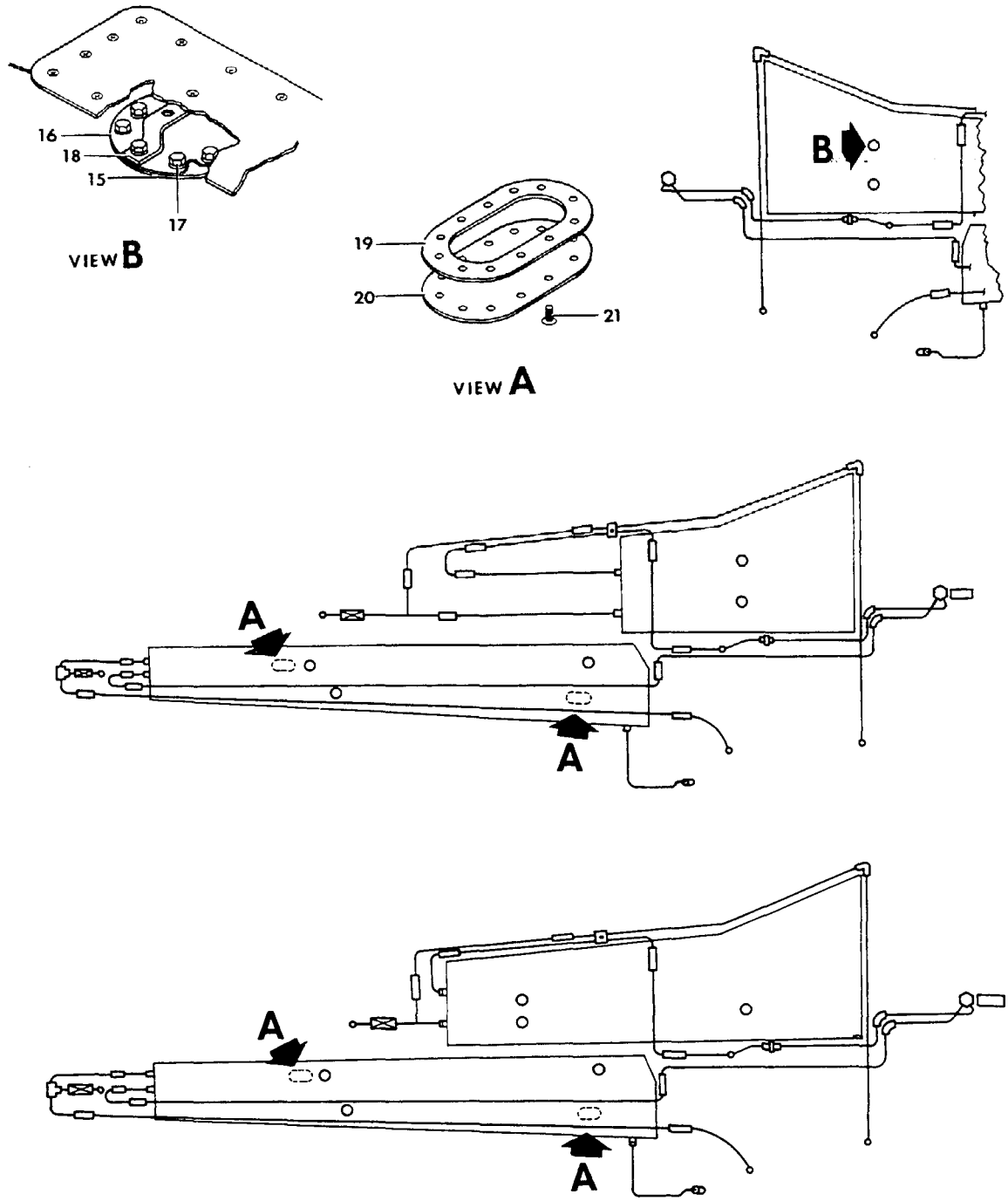

FIGURE 10-01.FUEL STORAGE AND INTERCONNECT
/SHEET 3 OF 3 SHEETS/

ATA CODE & INDEX NO.	PART NO.	DESCRIPTION 1 2 3 4 5 6 7	UNITS PER ASSY	USABLE ON CODE
10-01 - 15	FCB25722	. GASKET,PLATE.	1	5
- 16	50-921509-9	. PLATE,INBD LEADING EDGE FUEL CELL	1	5
		/ATTACHING PARTS/		
- 17	AN74-3/M/	. BOLT.	12	
	AN960-416L	. WASHER.	12	
		——*——		
- 18	50-921509-37	. CLIP ASSY,FILLER NECK STIFFENER	1	5
	50-921509-7	. . CLIP.	1	5
		/ATTACHING PARTS/		
	AN509-10R6	. . SCREW	2	
	NAS1024A3	. . NUTPLATE.	2	
		——*——		
- 19	FCA25751	. GASKET,31 GALLON FUEL CELL ACCESS	2	5
- 20	50-921520	. COVER,31 GALLON FUEL CELL ACCESS.	2	5
		/ATTACHING PARTS/		
- 21	AN74-4/M/	. BOLT.	12	
	AN960-416L	. WASHER.	12	
		——*——		

CODES OF EFFECTIVITY

1	TC-1 THRU TC-420 EXCEPT TC-251	2	TC-251 AND TC-421 THRU TC-501
3	TC-502 THRU TC-1607	4	TE-1 THRU TE-942 EXCEPT TE-938
5	TC-1 THRU TC-1607 TE-1 THRU TE-942 EXCEPT TE-938	6	TC-1 THRU TC-74
7	TC-75 THRU TC-1607 TE-1 THRU TE-942 EXCEPT TE-938	8	TC-1 THRU TC-1298 TE-1 THRU TE-767
9	TC-1299 THRU TC-1607 TE-768 THRU TE-942 EXCEPT TE-938	10	TC-1 THRU TC-375
11	TC-376 THRU TC-1298 TE-1 THRU TE-767	12	TC-251 AND TC-421 THRU TC-1607

"END"

28-10-10
VENT SYSTEM,FUEL STORAGE

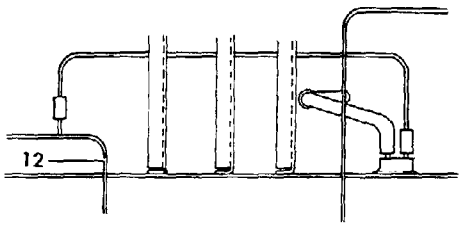

VIEW A

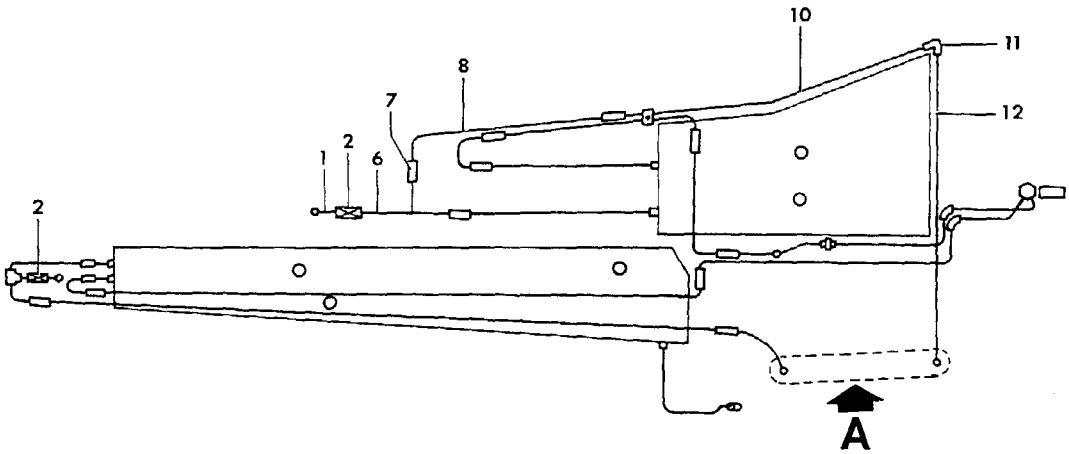

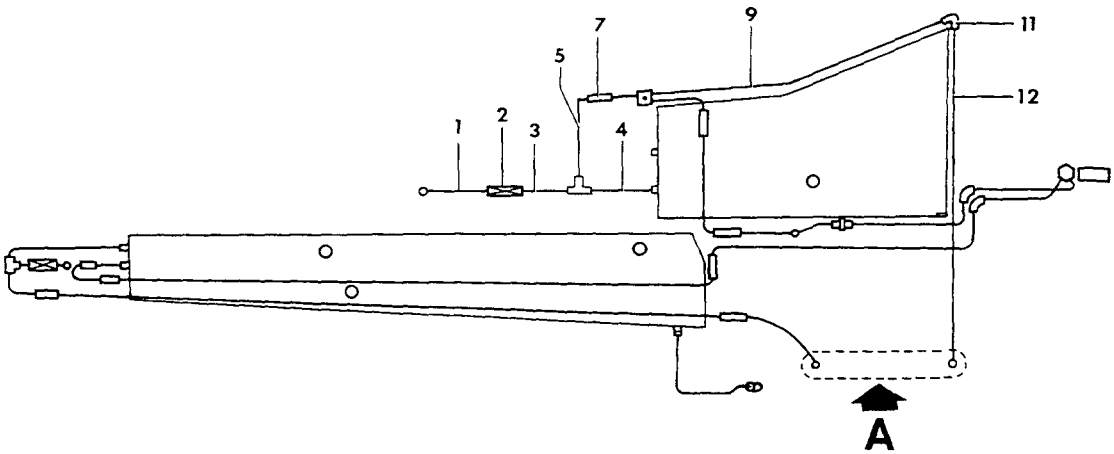

55-281-55

FIGURE 10-10.VENT SYSTEM,FUEL STORAGE
/SHEET 1 OF 2 SHEETS/

ATA CODE & INDEX NO.	PART NO.	DESCRIPTION 1 2 3 4 5 6 7	UNITS PER ASSY	USABLE ON CODE
10-10	96-920001	FUEL SYSTEM INSTL,112 GALLON/STANDARD/.	NP	1
	96-920001-155	FUEL SYSTEM INSTL,140 GALLON/OPTIONAL/.	NP	1
	96-920001-231	FUEL SYSTEM INSTL,114 GALLON/STANDARD/.	NP	2
	96-920001-233	FUEL SYSTEM INSTL,142 GALLON/OPTIONAL/.	NP	2
	96-920001-283	FUEL SYSTEM INSTL,112 GALLON/STANDARD/.	NP	7
	96-920001-285	FUEL SYSTEM INSTL,142 GALLON/OPTIONAL/.	NP	7
	96-920001-265	FUEL SYSTEM INSTL,112 GALLON/STANDARD/.	NP	8
	96-920001-267	FUEL SYSTEM INSTL,142 GALLON/OPTIONAL/.	NP	8
- 1	96-920001-5	. TUBE ASSY,25 GALLON FUEL CELL VENT LH	1	1
	96-920001-101	. TUBE ASSY,25 GALLON FUEL CELL VENT RH	1	1
	35-921155-101	. TUBE ASSY,40 GALLON FUEL CELL VENT L & RH . .	2	1
	35-921155-101	. TUBE ASSY,40 GALLON FUEL CELL VENT L & RH . .	2	2
	35-921155-147	. TUBE ASSY,25 & 40 GALLON FUEL CELL VENT LH. .	1	3
	35-921155-148	. TUBE ASSY,25 & 40 GALLON FUEL CELL VENT RH. .	1	3
	MS35489-6	. GROMMET	2	4
- 2	1111-595272	. VALVE,CHECK	4	4
	50-380170-11	. VALVE/ALT FOR 1111-595272,SUPERSEDES 366-00/.	4	4
- 3	96-920001-3	. TUBE ASSY,25 GALLON FUEL CELL VENT LH & RH. .	2	1
	35-921154-97	. TUBE ASSY,40 GALLON FUEL CELL VENT LH	1	1
	35-921154-98	. TUBE ASSY,40 GALLON FUEL CELL VENT RH	1	1
	AN824-4D	. TEE,25 & 40 GALLON FUEL CELL VENT TUBE. . . .	2	1
- 4	96-920001-1	. TUBE ASSY,25 GALLON FUEL CELL VENT LH & RH. .	2	1
	AN737RM22	. CLAMP	2	1
- 5	96-920001-63	. TUBE ASSY,25 GALLON FUEL CELL VENT LH & RH. .	2	1
- 6	33-921016-1	. TUBE ASSY,40 GALLON FUEL CELL VENT LH & RH. . /SUPERSEDES 35-921155-99,-100/	2	2
	33-921016-1	. TUBE ASSY,25 & 40 GALLON FUEL CELL VENT LH,RH	2	3
- 7	106200H4	. HOSE.	2	4
	AN737RM22	. CLAMP	4	4
- 8	96-920001-163	. TUBE ASSY,FUEL CELL VENT.	2	4
- 9	96-920001-7	. TUBE ASSY,25 GALLON FUEL CELL VENT LH	1	1
	96-920001-177	. TUBE ASSY,40 GALLON FUEL CELL VENT LH	1	1
	96-920001-8	. TUBE ASSY,25 GALLON FUEL CELL VENT RH	1	1
	96-920001-178	. TUBE ASSY,40 GALLON FUEL CELL VENT RH	1	1
- 10	96-920001-177	. TUBE ASSY,25 & 40 GALLON FUEL CELL VENT LH. .	1	5
	96-920001-178	. TUBE ASSY,25 & 40 GALLON FUEL CELL VENT RH. .	1	5
- 11	AN821-4D	. ELBOW,25 & 40 GALLON FUEL CELL VENT TUBE. . .	2	4
- 12	96-920001-175	. TUBE ASSY,25 & 40 GALLON FUEL CELL VENT LH. .	1	4
	96-920001-176	. TUBE ASSY,25 & 40 GALLON FUEL CELL VENT RH. .	1	4
	AN931A4-7	. GROMMET	2	4

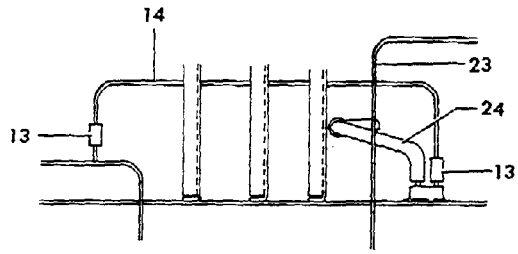

VIEW A

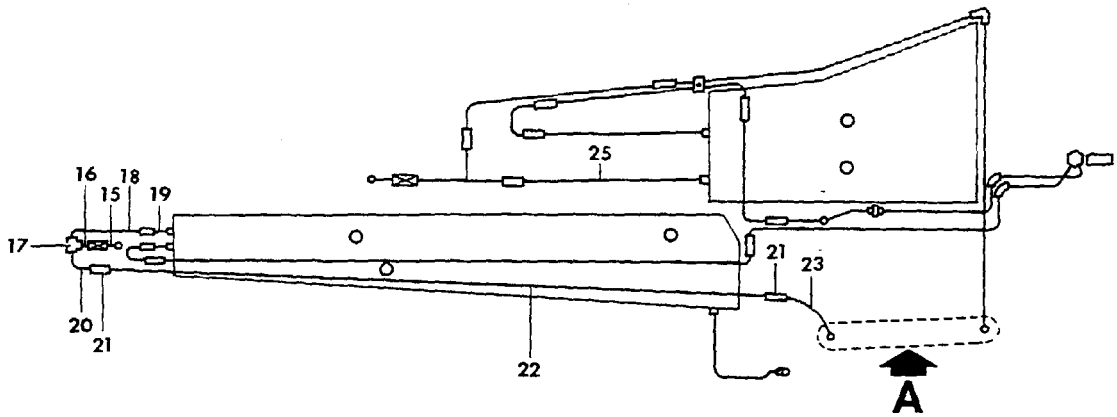

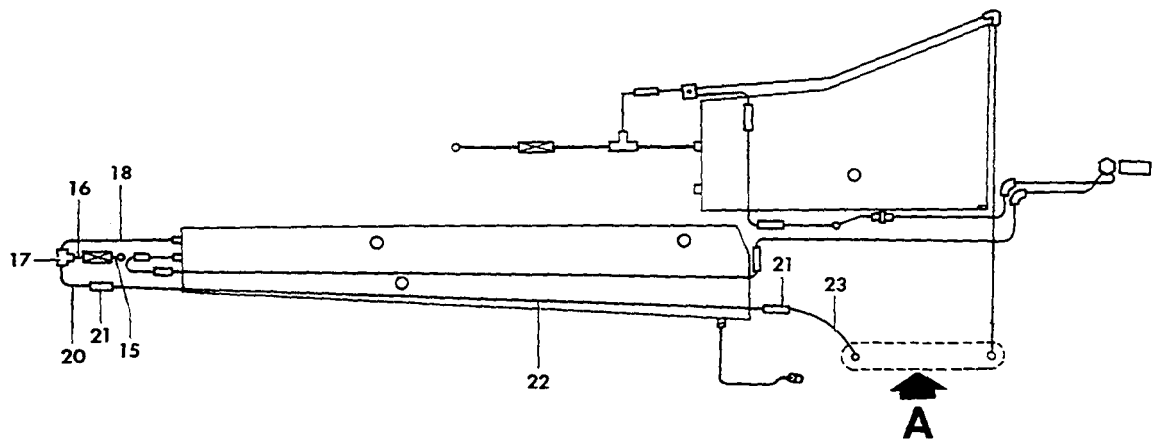

55-281-S6

FIGURE 10-10.VENT SYSTEM,FUEL STORAGE
/SHEET 2 OF 2 SHEETS/

ATA CODE & INDEX NO.	PART NO.	DESCRIPTION 1 2 3 4 5 6 7	UNITS PER ASSY	USABLE ON CODE
10-10 - 13	106200H6-15	. HOSE,25 & 40 GALLON FUEL CELL VENT TUBE . . .	2	4
- 14	96-920001-81	. TUBE ASSY,25 & 40 GALLON FUEL CELL VENT LH. .	1	4
	96-920001-82	. TUBE ASSY,25 & 40 GALLON FUEL CELL VENT RH. .	1	4
- 15	96-920001-243	. TUBE ASSY,17 & 31 GALLON FUEL CELL VENT LH. .	1	4
	96-920001-244	. TUBE ASSY,17 & 31 GALLON FUEL CELL VENT RH. .	1	4
	106200H4-15	. HOSE,17 & 31 GALLON FUEL CELL VENT.	2	4
		/ORDER 1/4 ID MIL 6000,SPECIFY LENGTH/		
- 16	96-920001-13	. TUBE ASSY,17 & 31 GALLON FUEL CELL VENT LH. .	1	4
	96-920001-14	. TUBE ASSY,17 & 31 GALLON FUEL CELL VENT RH. .	1	4
- 17	AN824-4D	. TEE,17 & 31 GALLON FUEL CELL VENT TUBE. . . .	2	4
- 18	96-920001-9	. TUBE ASSY,17 & 31 GALLON FUEL CELL VENT LH. .	1	4
	96-920001-10	. TUBE ASSY,17 & 31 GALLON FUEL CELL VENT RH. .	1	4
	AN737RM22	. CLAMP,FUEL CELL VENT LH & RH.	2	4
- 19	96-920001-239	. TUBE ASSY,17 GALLON FUEL CELL VENT LH	1	6
	96-920001-240	. TUBE ASSY,17 GALLON FUEL CELL VENT RH	1	6
	106200H4	. HOSE.	2	6
	AN737RM22	. CLAMP,HOSE & FUEL CELL VENT	6	6
- 20	96-920001-11	. TUBE ASSY,17 & 31 GALLON FUEL CELL VENT LH. .	1	4
	96-920001-12	. TUBE ASSY,17 & 31 GALLON FUEL CELL VENT RH. .	1	4
- 21	106200H4-15	. HOSE,17 & 31 GALLON FUEL CELL VENT TUBE . . .	4	4
- 22	96-920001-97	. TUBE ASSY,17 & 31 GALLON FUEL CELL VENT . . .	1	4
- 23	96-920001-61	. TUBE ASSY,17 & 31 GALLON FUEL CELL VENT LH. .	1	4
	96-920001-62	. TUBE ASSY,17 & 31 GALLON FUEL CELL VENT RH. .	1	4
- 24	106200H6-47	. HOSE,17 & 31 GALLON FUEL CELL VENT TUBE . . .	2	4
	49161	. CLAMP,LH & RH	2	4
	AN520-10R8	. SCREW	2	4
	AN960-10	. WASHER.	2	4
	AN365-10	. NUT	2	4
- 25	96-920001-277	. TUBE ASSY,LH & RH/USED WITH 112 GAL INSTL/. .	2	4

CODES OF EFFECTIVITY

1	TC-1 THRU TC-420 EXCEPT TC-251	2	TC-251 AND TC-421 THRU TC-501
3	TC-502 THRU TC-1607 TE-1 THRU TE-942 EXCEPT TE-938	4	TC-1 THRU TC-1607 TE-1 THRU TE-942 EXCEPT TE-938
5	TC-251 AND TC-421 THRU TC-1607 TE-1 THRU TE-942 EXCEPT TE-938	6	TC-251 AND TC-421 THRU TC-1607
7	TC-502 THRU TC-1607	8	TE-1 THRU TE-942 EXCEPT TE-938

"END"

28-10-20
FUEL CAP AND ADAPTER

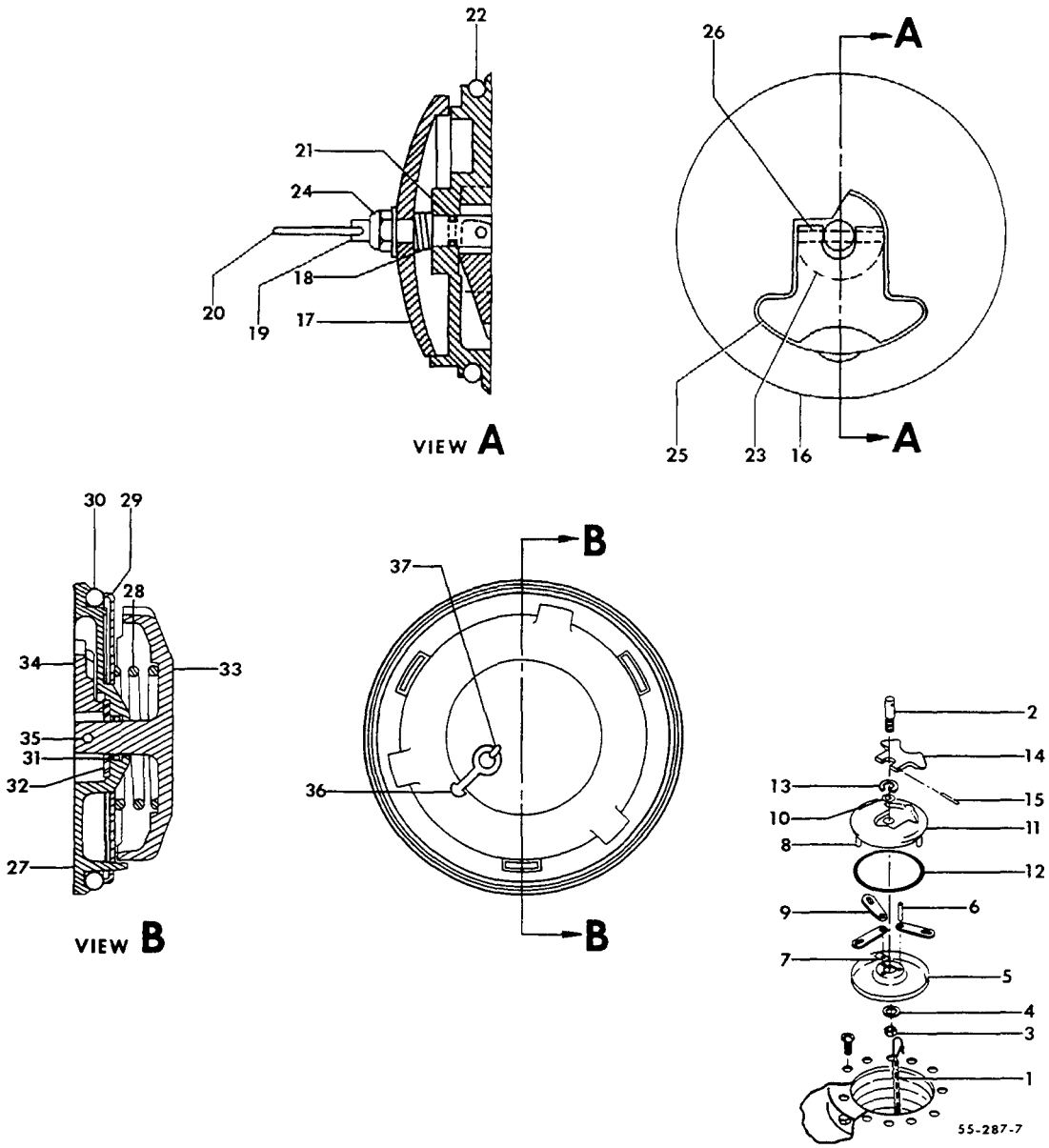

FIGURE 10-20.FUEL CAP AND ADAPTER
/SHEET 1 OF 2 SHEETS/

ATA CODE & INDEX NO.	PART NO.	DESCRIPTION 1 2 3 4 5 6 7	UNITS PER ASSY	USABLE ON CODE
10-20	416-85-25	CAP ASSY,LEADING EDGE FUEL CELL FILLER.	1	1
	416-85	CAP ASSY,AUXILIARY FUEL CELL FILLER	1	1
		/SUPERSEDES 416-85-31/		
- 1	416-61-6	. CHAIN ASSY,FUEL CELL FILLER CAP	1	1
	416-50	. CAP ASSY,FUEL CELL 3-INCH FILLER.	1	1
- 2	416-54	. . AXLE,FUEL CELL CAP.	1	1
- 3	AN310-4	. . NUT	1	1
- 4	AF940-416	. . WASHER.	1	1
	AN380-2-2	. . PIN,COTTER.	1	1
- 5	416-56	. . DISC,FUEL CELL CAP ANCHOR	1	1
		/ATTACHING PARTS/		
- 6	416-60	. . PIN	3	
		——*——		
- 7	A1059-014-3	. . WASHER,SPRING	6	1
- 8	416-59	. . PIN,FUEL CELL CAP DRIVE	3	1
- 9	416-55	. . PAWL,FUEL CELL CAP.	3	1
- 10	MS29513-10	. . O RING.	1	1
- 11	416-52	. . BASE,FUEL CELL CAP.	1	1
- 12	MS29513-232	. . O RING.	1	1
- 13	427-8	. . PLATE,FUEL CELL CAP BEARING	1	1
- 14	416-53	. . HANDLE,FUEL CELL CAP.	1	1
		/ATTACHING PARTS/		
- 15	AN122697	. . PIN	1	
		——*——		
	96-380035-1	CAP ASSY,FUEL CELL FILLER/MAY BE USED IN. . . .	1	2
		LIEU OF 96-380035-3,-5,ORDER 96-380035/		
	431-9	. BODY ASSY,FUEL CELL FILLER CAP.	1	2
- 16	431-14	. BASE.	1	2
- 17	431-11	. PAWL.	1	2
- 18	431-13	. SPRING.	1	2
- 19	416-16	. AXLE,FUEL CELL FILLER CAP	1	2
- 20	416-13	. HOOK.	1	2
- 21	MS29513-10	. O RING.	1	2
- 22	MS29513-338	. O RING.	1	2
- 23	431-18	. PLATE,BEARING	1	2
- 24	AN310-4	. NUT	1	2
	416-326-1	. WASHER.	1	2
	MS24665-132	. PIN,COTTER.	1	2
- 25	431-15	. HANDLE.	1	2
		/ATTACHING PARTS/		
- 26	416-9-1	. PIN,HANDLE.	1	
		——*——		
	96-380035-3	CAP ASSY,FUEL CELL FILLER/MAY BE USED IN. . . .	1	2
		LIEU OF 96-380035-1,-5,ORDER 96-380035/		
- 27	37685-2	. BASE.	1	2
- 28	37693	. SPRING.	1	2
- 29	37691	. RETAINER.	1	2
- 30	37617-339	. O RING.	1	2
- 31	37117	. PLATE,BEARING	1	2
- 32	MS9021-110	. O RING.	1	2
- 33	38038	. LOCK.	1	2
- 34	C37656-41	. HANDLE.	1	2
		/ATTACHING PARTS/		
- 35	38061	. PIN,HANDLE.	1	
		——*——		
- 36	38104	. COUPLING.	1	2
- 37	AN381-3-8	. PIN,COTTER.	1	2

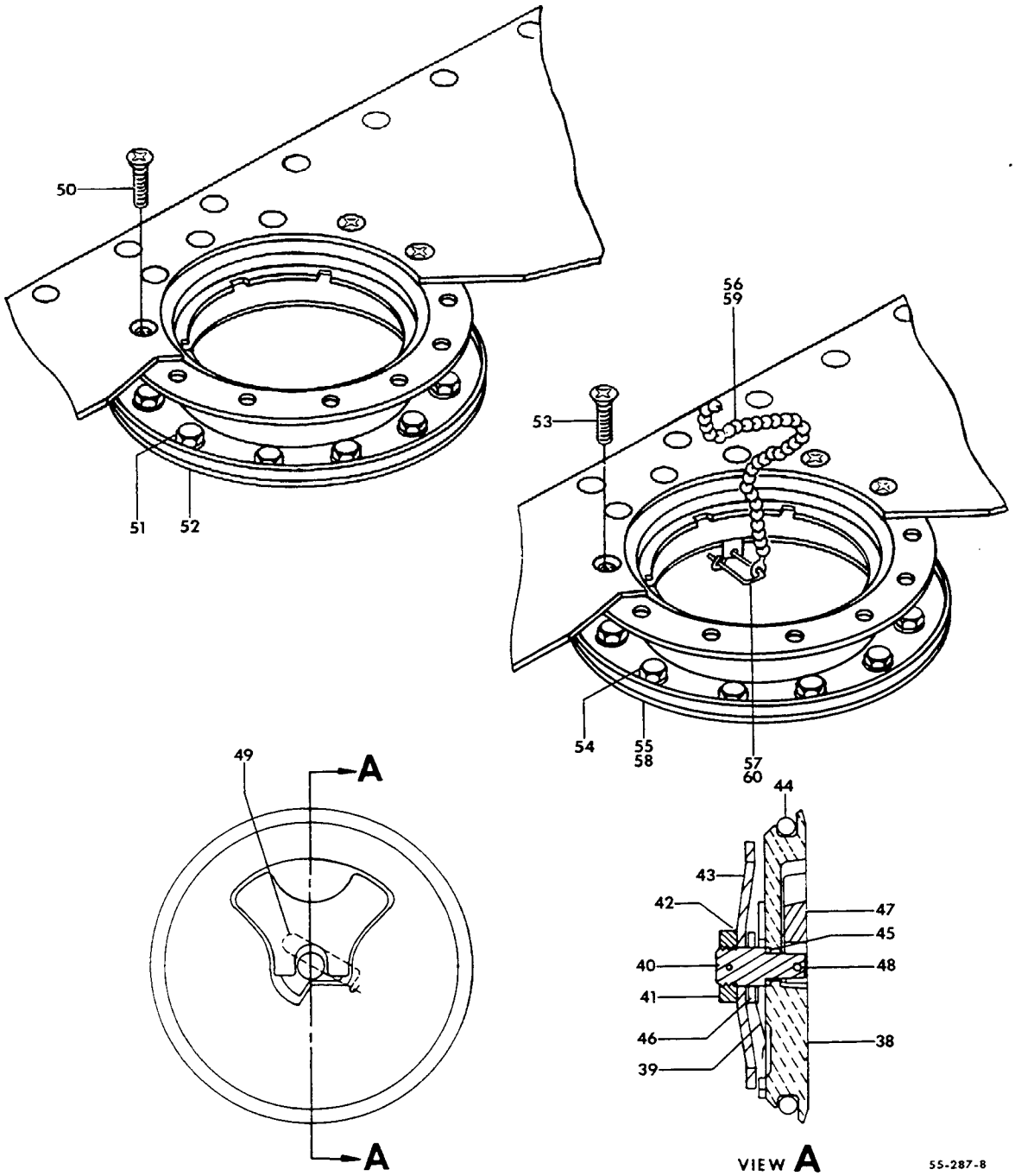

FIGURE 10-20.FUEL CAP AND ADAPTER
/SHEET 2 OF 2 SHEETS/

ATA CODE & INDEX NO.	PART NO.	DESCRIPTION 1 2 3 4 5 6 7	UNITS PER ASSY	USABLE ON CODE
10-20	96-380035-5	CAP ASSY,FUEL CELL FILLER/MAY BE USED IN. . . . LIEU OF 96-380035-1,-3,ORDER 96-380035/	1	2
- 38	HE1794-1	. BODY,CAP.	1	2
- 39	HE1798	. SPRING.	1	2
- 40	HE1797	. SHAFT	1	2
- 41	AN320-8	. NUT	1	2
- 42	MS29513-11	. O RING.	1	2
- 43	HE1796	. PLATE,CLAMPING.	1	2
- 44	MS29513-338	. O RING.	1	2
- 45	HE1417	. WASHER.	1	2
- 46	HE1850-1	. WASHER.	1	2
- 47	HE1795	. LEVER,CAM . . . . . /ATTACHING PARTS/	1	2
- 48	79-022-094-0875	. PIN,ROLL.	1	
- 49	HE1414	. PIN,SAFETY.	1	2
	45-921544	ADAPTER ASSY,LEADING EDGE FUEL CELL FILLER CAP.	1	1
	50-921518	ADAPTER ASSY,AUXILIARY FUEL CELL FILLER CAP . . /ATTACHING PARTS/	1	1
- 50	AN509-1032R9	SCREW	12	
- 51	AN74-3/M/	BOLT.	12	
	AN960-416L	WASHER.	12	
- 52	45-921544-1	. ADAPTER,LEADING EDGE FUEL CELL FILLER CAP . .	1	1
	50-921518-1	. ADAPTER,AUXILIARY FUEL CELL FILLER CAP. . . .	1	1
	NAS680A3	. NUTPLATE/SUPERSEDES AN366F1032/	12	1
	96-380036-3	ADAPTER ASSY,LEADING EDGE FUEL CELL FILLER CAP.	1	2
	96-380036-1	ADAPTER ASSY,AUXILIARY FUEL CELL FILLER CAP . . /ATTACHING PARTS/	1	2
- 53	AN509-1032R9	SCREW	12	
- 54	MS20073-04-04	BOLT.	12	
	AN960-416L	WASHER.	12	
- 55	37826	. ADAPTER ASSY,WELDED/LE,FUEL CELL FILLER CAP/.	1	2
	37825	. ADAPTER ASSY,WELDED/AUX FUEL CELL FILLER CAP/	1	2
	37827	. NUT,ANCHOR/LE,FUEL CELL FILLER CAP ADAPTER/ .	12	2
	NAS680A3	. NUT,ANCHOR/AUXILIARY FUEL CELL FILLER CAP . . ADAPTER,SUPERSEDES AN366F1032/	12	2
- 56	38105-5	. CHAIN,BEAD.	1	2
- 57	MS29523-1	. HOOK.	1	2
- 58	HE651-3	. ADAPTER ASSY,WELDED/LE,FUEL CELL FILLER CAP . ALTERNATE FOR 37826/	1	2
	HE651-1	. ADAPTER ASSY,WELDED/AUXILIARY FUEL CELL . . . FILLER CAP,ALTERNATE FOR 37825/	1	2
	K1000-3	. NUTPLATE.	12	2
- 59	NAS1201B10	. CHAIN	1	2
	10A167	. COUPLING.	1	2
- 60	HE1414	. PIN,SAFETY.	1	2

CODES OF EFFECTIVITY

1 TC-1 THRU TC-74

2 TC-75 THRU TC-1607
TE-1 THRU TE-942
EXCEPT TE-938

"END"

28-20-01
FUEL DISTRIBUTION

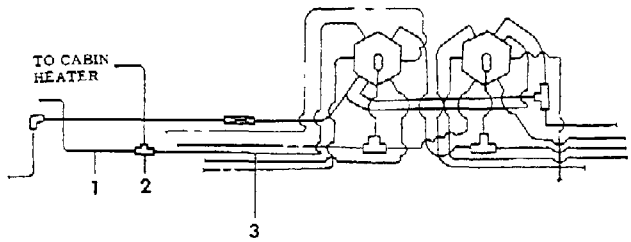

VIEW A

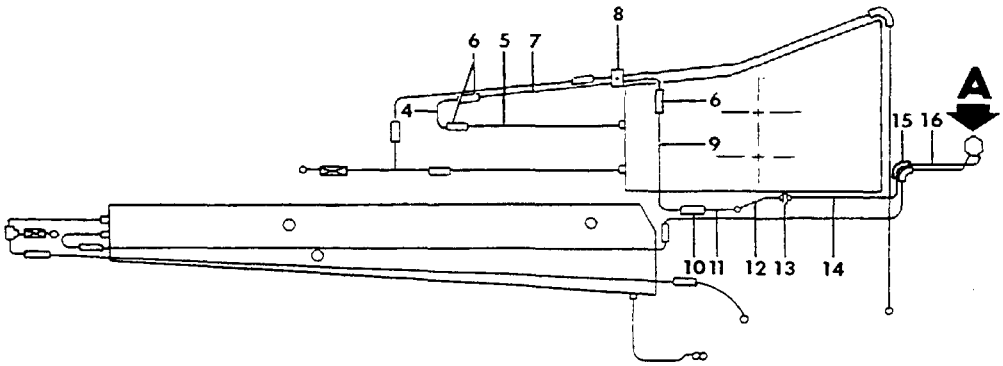

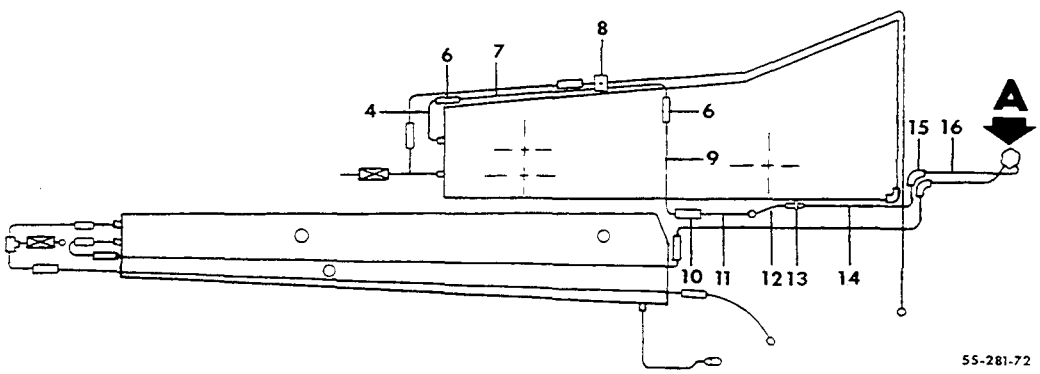

FIGURE 20-01.FUEL DISTRIBUTION
/SHEET 1 OF 6 SHEETS/

SUB-SECT UNIT & ITEM NO.	PART NO.	DESCRIPTION 1 2 3 4 5 6 7	UNITS PER ASSY	USABLE ON CODE
20-01	96-920001	FUEL SYSTEM INSTL,112 GALLON/STANDARD/.	NP	1
	96-920001-155	FUEL SYSTEM INSTL,140 GALLON/OPTIONAL/.	NP	1
	96-920001-231	FUEL SYSTEM INSTL,114 GALLON/STANDARD/.	NP	2
	96-920001-233	FUEL SYSTEM INSTL,142 GALLON/OPTIONAL/.	NP	2
	96-920001-283	FUEL SYSTEM INSTL,112 GALLON/STANDARD/.	NP	3
	96-920001-285	FUEL SYSTEM INSTL,142 GALLON/OPTIONAL/.	NP	3
	96-920001-265	FUEL SYSTEM INSTL,112 GALLON/STANDARD/.	NP	4
	96-920001-267	FUEL SYSTEM INSTL,142 GALLON/OPTIONAL/.	NP	4
- 1	96-920001-47	. TUBE ASSY,25 & 40 GALLON FUEL CELL SUPPLY LH.	1	5
	96-920001-107	. TUBE ASSY,25 & 40 GALLON FUEL CELL SUPPLY RH.	1	5
- 2	AN783-6D	. TEE,CABIN HEATER FUEL TUBE.	1	5
	MS29512-6	. GASKET,CABIN HEATER FUEL TUBE	4	5
	AN919-6D	. REDUCER,CABIN HEATER FUEL TUBE.	1	5
- 3	96-920001-59	. TUBE ASSY,LH FUEL CELL SUPPLY/25 & 40 GALLON/	1	5
- 4	96-920001-69	. TUBE ASSY,LH FUEL CELL RETURN/25 GALLON/. . .	1	1
	96-920001-70	. TUBE ASSY,RH FUEL CELL RETURN/25 GALLON/. . .	1	1
	35-921154-95	. TUBE ASSY,LH & RH FUEL CELL RETURN/40 GALLON/	2	7
	35-921154-95	. TUBE ASSY,LH & RH FUEL CELL RETURN. . . . . /25 & 40 GALLON/	2	8
	MS35489-6	. GROMMET,ELASTIC/SUPERSEDES AN931-4-7/	2	5
- 5	96-920001-279	. TUBE ASSY,LH & RH/USED WITH 112 GAL INSTL/. .	2	5
- 6	106200H4	. HOSE.	6	5
	AN737RM22	. CLAMP	12	5
- 7	96-920001-167	. TUBE ASSY,LH FUEL CELL RETURN/40 GALLON/. . .	1	1
	96-920001-167	. TUBE ASSY,LH FUEL CELL RETURN/25 & 40 GALLON/	1	6
	96-920001-168	. TUBE ASSY,RH FUEL CELL RETURN/40 GALLON/. . .	1	1
	96-920001-168	. TUBE ASSY,RH FUEL CELL RETURN/25 & 40 GALLON/	1	6
- 8	96-920001-315	. BLOCK,TUBE POSITIONING. . . . . /ATTACHING PARTS/	4	5
	AN515-832	. SCREW	2	
	AN960-8	. WASHER.	2	
	MS20365-832	. NUT	2	
		----*----		
	R AN737RM22	. CLAMP	2	5
- 9	96-920001-179	. TUBE ASSY,LH FUEL RETURN/40 GALLON/	1	1
	96-920001-179	. TUBE ASSY,LH FUEL RETURN/25 & 40 GALLON/. . .	1	6
	96-920001-180	. TUBE ASSY,RH FUEL RETURN/40 GALLON/	1	1
	96-920001-180	. TUBE ASSY,RH FUEL RETURN/25 & 40 GALLON/. . .	1	6
- 10	AN832-4D	. UNION	2	5
	AN924-4D	. NUT	2	5
- 11	96-920001-169	. TUBE ASSY,LH FUEL RETURN/40 GALLON/	1	1
	96-920001-169	. TUBE ASSY,LH FUEL RETURN/25 & 40 GALLON/. . .	1	6
	96-920001-170	. TUBE ASSY,RH FUEL RETURN/40 GALLON/	1	1
	96-920001-170	. TUBE ASSY,RH FUEL RETURN/25 & 40 GALLON/. . .	1	6
	AN821-4D	. ELBOW,LH & RH FUEL RETURN TUBE.	2	5
	MS35489-7	. GROMMET/SUPERSEDES AN931-4-12/.	2	5
- 12	96-920001-71	. TUBE ASSY,LH FUEL RETURN/25 & 40 GALLON/. . .	1	1
	96-920001-72	. TUBE ASSY,RH FUEL RETURN/25 & 40 GALLON/. . .	1	1
	96-920001-241	. TUBE ASSY,LH & RH FUEL RETURN/25 & 40 GALLON/	2	6
- 13	AN815-4D	. NIPPLE,LH & RH FUEL RETURN TUBE	4	5
- 14	96-920001-153	. TUBE ASSY,LH FUEL RETURN/25 & 40 GALLON/. . .	1	5
	96-920001-154	. TUBE ASSY,RH FUEL RETURN/25 & 40 GALLON/. . .	1	5
- 15	AN833-4D	. ELBOW	2	5
	AN960-716	. WASHER.	2	5
	AN924-4D	. NUT	2	5
- 16	96-920001-73	. TUBE ASSY,LH FUEL RETURN/25 & 40 GALLON/. . .	1	5
	96-920001-131	. TUBE ASSY,RH FUEL RETURN/25 & 40 GALLON/. . .	1	5

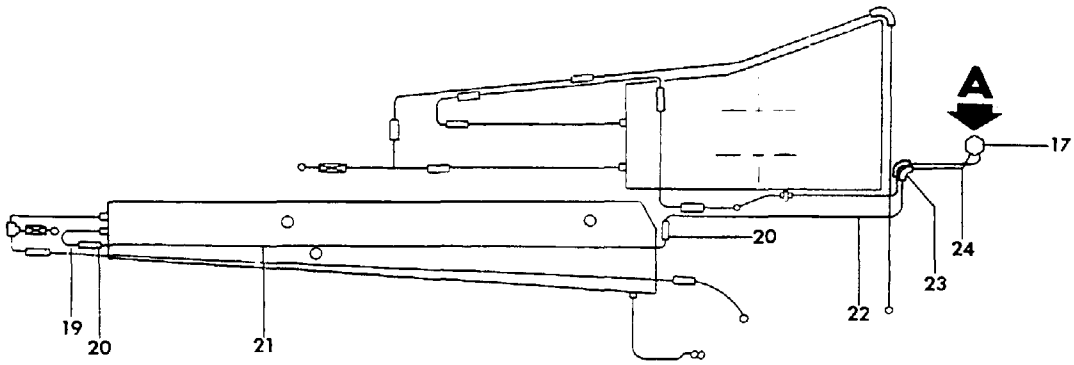

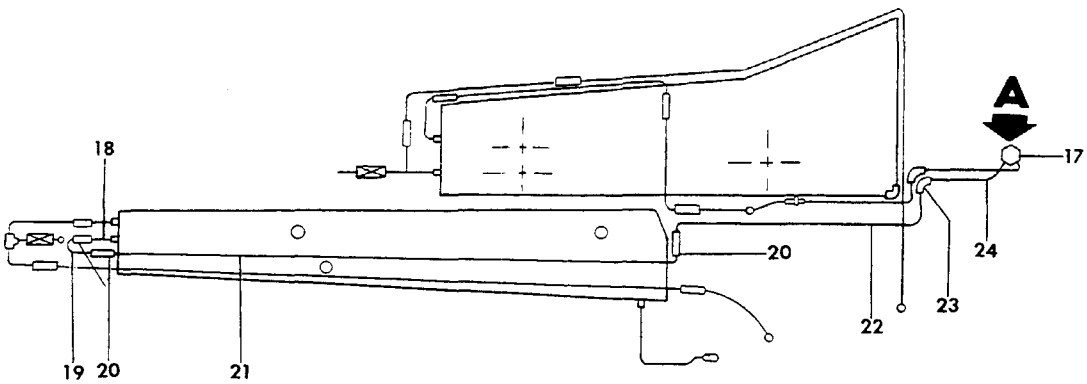

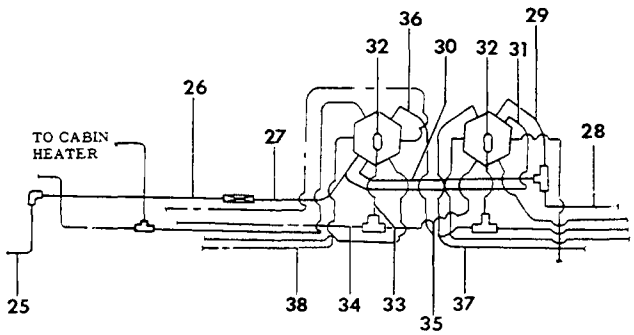

VIEW **A**

55-281-73

FIGURE 20-01.FUEL DISTRIBUTION
/SHEET 2 OF 6 SHEETS/

ATA CODE & INDEX NO.	PART NO.	DESCRIPTION 1 2 3 4 5 6 7	UNITS PER ASSY	USABLE ON CODE
20-01 - 17	96-920001-632	VALVE ASSY,FUEL SELECTOR. /USED ON 112 GAL INSTL/	1	26
	96-920001-620	VALVE ASSY,FUEL SELECTOR. /USED ON 140 GAL INSTL/	1	1
	96-920001-630	VALVE ASSY,FUEL SELECTOR. /USED ON 114 GAL INSTL/	1	2
	96-920001-631	VALVE ASSY,FUEL SELECTOR. /USED ON 142 GAL INSTL/	1	27
	96-920001-638	VALVE ASSY,FUEL SELECTOR. /USED ON 112 GAL INSTL/	1	28
	96-920001-637	VALVE ASSY,FUEL SELECTOR. /USED ON 142 GAL INSTL/	1	28
	96-920001-611	VALVE ASSY,FUEL SELECTOR LH	1	5
	96-920001-612	VALVE ASSY,FUEL SELECTOR RH	1	5
- 18	96-920001-237	TUBE ASSY,LH FUEL RETURN/USED WITH. 17 GALLON CELL ON 114 GALLON INSTL/	1	2
	96-920001-238	TUBE ASSY,RH FUEL RETURN/USED WITH. 17 GALLON CELL ON 114 GALLON INSTL/	1	2
- 19	96-920001-183	TUBE ASSY,LH & RH FUEL RETURN/17 & 31 GALLON/	2	5
- 20	106200H4	HOSE.	6	5
	AN737RM22	CLAMP	12	5
	AN931-4-7	GROMMET,LH & RH	18	5
- 21	96-920001-187	TUBE ASSY,LH & RH FUEL RETURN/17 & 31 GALLON/	2	5
- 22	96-920001-185	TUBE ASSY,LH FUEL RETURN/17 & 31 GALLON/.	1	5
	96-920001-186	TUBE ASSY,RH FUEL RETURN/17 & 31 GALLON/.	1	5
	AN931-4-12	GROMMET,ELASTIC	2	5
- 23	AN833-4D	ELBOW	2	5
	AN960-716	WASHER.	2	5
	AN924-4D	NUT	2	5
- 24	96-920001-77	TUBE ASSY,LH FUEL RETURN/17 & 31 GALLON	1	5
	96-920001-35	TUBE ASSY,RH FUEL RETURN/17 & 31 GALLON/.	1	5
- 25	96-920001-151	TUBE ASSY,ENGINE FUEL RETURN LH	1	5
	96-920001-152	TUBE ASSY,ENGINE FUEL RETURN RH	1	5
	AN833-4D	ELBOW,ENGINE FUEL RETURN TUBE	2	5
	AN960-716	WASHER.	2	5
	AN924-4D	NUT	2	5
- 26	96-920001-65	TUBE ASSY,ENGINE FUEL RETURN LH	1	5
	96-920001-129	TUBE ASSY,ENGINE FUEL RETURN RH	1	5
	1111-595272	VALVE,ENGINE FUEL SUPPLY CHECK.	2	5
	50-380170-11	VALVE,ENGINE FUEL SUPPLY CHECK/ALTERNATE. FOR 1111-595272,SUPERSEDES 366-00/	2	5
- 27	96-920001-67	TUBE ASSY,ENGINE FUEL RETURN LH	1	5
- 28	96-920001-119	TUBE ASSY,ENGINE FUEL RETURN RH	1	5
	AN824-4D	TEE	1	5
- 29	96-920001-173	TUBE ASSY,SELECTOR VALVE.	1	5
- 30	96-920001-93	TUBE ASSY,SELECTOR VALVE.	1	5
- 31	96-920001-43	TUBE ASSY,SELECTOR VALVE.	1	5
- 32	AN822-6D	ELBOW	2	5
- 33	96-920001-115	TUBE ASSY,ENGINE FUEL SUPPLY.	2	5
- 34	96-920001-111	TUBE ASSY,ENGINE FUEL SUPPLY.	2	5
- 35	96-920001-89	TUBE ASSY,LH ENGINE FUEL CROSSFEED SUPPLY	1	5
- 36	96-920001-127	TUBE ASSY,RH ENGINE FUEL CROSSFEED SUPPLY	1	5
	AN824-6D	TEE	2	5
- 37	96-920001-171	TUBE ASSY,31 GALLON FUEL CELL SUPPLY RH	1	5
	AN815-6D	NIPPLE.	1	5
- 38	96-920001-45	TUBE ASSY,31 GALLON FUEL CELL SUPPLY LH	1	5

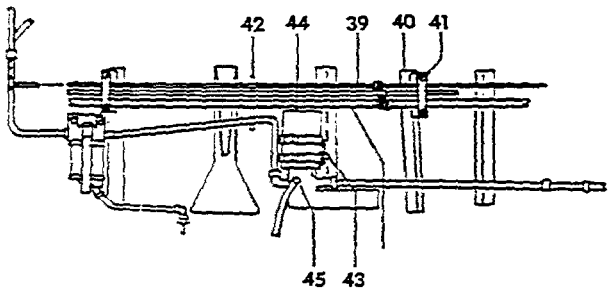

VIEW A

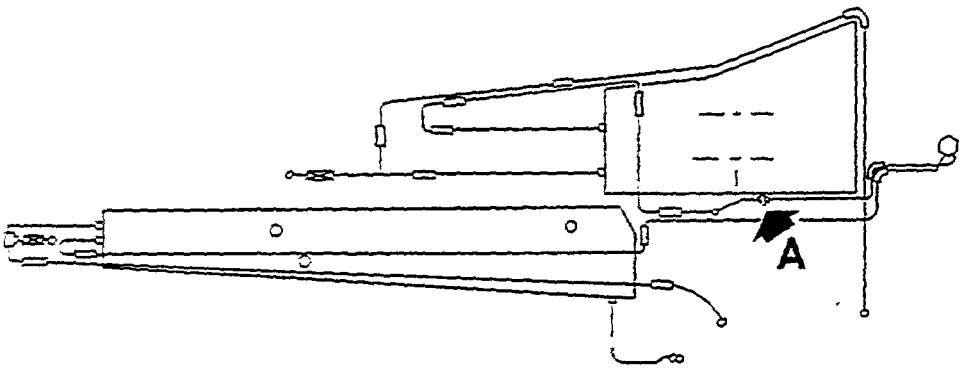

SS-281-74

FIGURE 20-01.FUEL DISTRIBUTION
/SHEET 3 OF 6 SHEETS/

SUB-SECT UNIT & ITEM NO.	PART NO.	DESCRIPTION 1 2 3 4 5 6 7	UNITS PER ASSY	USABLE ON CODE
20-01 - 39	96-920001-57	. TUBE ASSY,ENGINE FUEL RETURN LH	1	1
	96-920001-58	. TUBE ASSY,ENGINE FUEL RETURN.	1	1
	96-920001-223	. TUBE ASSY,ENGINE FUEL RETURN LH & RH.	2	6
	AN815-4D	. NIPPLE.	4	5
- 40	96-920001-261	. ANGLE,LH & RH	4	5
- 41	96-920001-263	. BLOCK,LH & RH	4	5
		/ATTACHING PARTS/		
	AN3-11A	. BOLT.	8	
	AN960-10L	. WASHER.	8	
	MS20365-1032	. NUT,LOCK.	8	
		----*----		
- 42	96-920001-195	. SUPPORT	2	1
	96-920001-271	. SUPPORT	2	2
	96-920017	. SUPPORT	2	10
	AN931-6-10	. GROMMET	6	5
	AN931-4-7	. GROMMET	4	5
- 43	96-920016-5	. BRACKET,FUEL BOOST PUMP MOUNTING LH	1	5
	96-920016-7	. BRACKET,FUEL BOOST PUMP MOUNTING RH	1	5
- 44	R 4032B	. PUMP,FUEL BOOST LH & RH	2	29
		SEE KIT 55-9021-1		
	96-920001-639	. PUMP ASSY,LH FUEL BOOST/WITH FITTINGS/.	1	13
	96-920001-640	. PUMP ASSY,RH FUEL BOOST/WITH FITTINGS/.	1	13
	4140-00	. . PUMP,FUEL BOOST LH & RH	2	13
	AN815-6D	. . NIPPLE.	1	13
	AN924-6	. . NUT	1	13
	MS29512-6	. . O RING.	1	13
	AN833-6D	. . ELBOW	1	13
	2140-54	. . FITTING,FUEL BOOST PUMP DRAIN	1	6
	R 96-920001-627	. PUMP ASSY,LH FUEL BOOST	1	14
	R 96-920001-633	. PUMP ASSY,LH FUEL BOOST	1	16
	96-920001-639	. PUMP ASSY,LH FUEL BOOST	1	17
	R 96-920001-628	. PUMP ASSY,LH FUEL BOOST	1	14
	96-920001-634	. PUMP ASSY,RH FUEL BOOST	1	16
	96-920001-640	. PUMP ASSY,RH FUEL BOOST	1	17
	R 96-380020	. . PUMP,FUEL BOOST LH & RH/ORDER 55-9011-3 KIT	2	14
	R 96-380020-1	. . PUMP,FUEL BOOST LH & RH/ORDER 55-9011-1 KIT	2	16
		TWO PUMPS ARE INCLUDED IN EACH KIT.		
	4404-00-1	. . PUMP,FUEL BOOST	2	17
		/ATTACHING PARTS/		
	AN74A11	. . BOLT.	4	
	100696S-ZH020	. . SPACER.	4	
	AN737TW91	. . CLAMP,FUEL BOOST PUMP	2	
		----*----		
	AN920-8D	. . UNION	2	10
	MS29512-8	. . O RING.	2	10
	2140-54	. . ELBOW	1	10
- 45	AN823-4D	. ELBOW,FUEL BOOST PUMP DRAIN TUBE.	2	1
	2140-54	. ELBOW,FUEL BOOST PUMP DRAIN	2	6
	96-920001-139	. TUBE ASSY,FUEL BOOST PUMP DRAIN LH.	1	1
	96-920001-140	. TUBE ASSY,FUEL BOOST PUMP DRAIN RH.	1	1
	106043ZA030	. HOSE,FUEL BOOST PUMP DRAIN.	2	2
	106043ZA050	. HOSE,FUEL BOOST PUMP DRAIN.	2	18
	106043ZA070	. HOSE,FUEL BOOST PUMP DRAIN.	2	17
	96-920001-229	. TUBE,FUEL BOOST PUMP DRAIN.	2	6
	MS35489-6	. GROMMET	2	1
	MS35489-6	. GROMMET	2	6

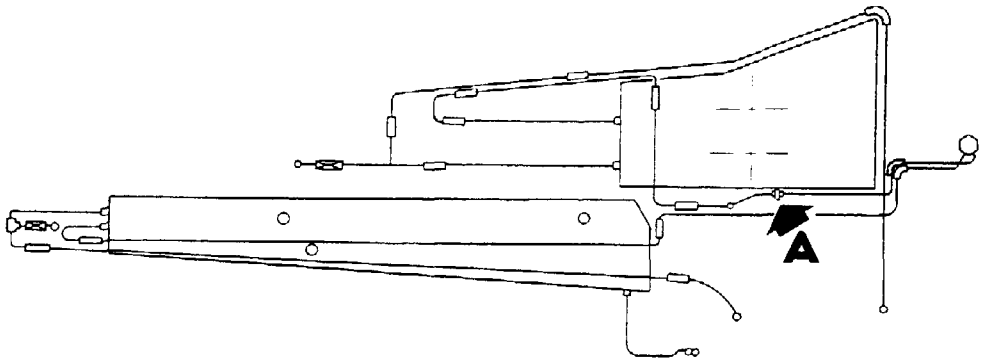

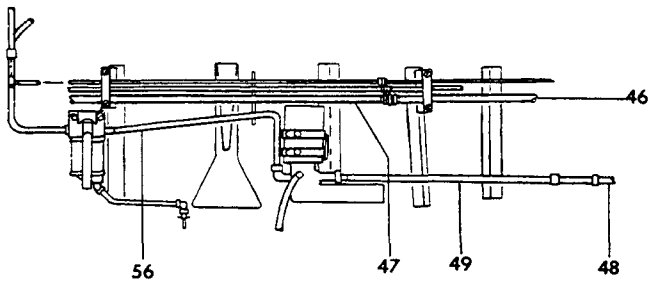

VIEW A

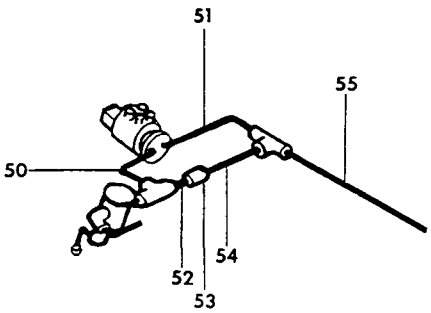

55-281-75

FIGURE 20-01. FUEL DISTRIBUTION
/SHEET 4 OF 6 SHEETS/

ATA CODE & INDEX NO.	PART NO.	DESCRIPTION 1 2 3 4 5 6 7	UNITS PER ASSY	USABLE ON CODE
20-01 - 46	96-920001-39	. TUBE ASSY,LH FUEL CELL SUPPLY/31 GAL/	1	1
	96-920001-253	. TUBE ASSY,LH FUEL CELL SUPPLY/31 GAL/	1	6
	96-920001-40	. TUBE ASSY,RH FUEL CELL SUPPLY/31 GAL/	1	1
	96-920001-255	. TUBE ASSY,RH FUEL CELL SUPPLY/31 GAL/	1	6
	AN832-6D	. UNION,31 GALLON FUEL CELL SUPPLY TUBE	2	5
	AN924-6D	. NUT,31 GALLON FUEL CELL SUPPLY TUBE	2	5
	AN815-6D	. NIPPLE,31 GALLON FUEL CELL SUPPLY TUBE. . . .	2	5
- 47	96-920001-37	. TUBE ASSY,LH FUEL CELL SUPPLY/31 GAL/	1	1
	96-920001-257	. TUBE ASSY,LH FUEL CELL SUPPLY/31 GAL/	1	6
	96-920001-38	. TUBE ASSY,RH FUEL CELL SUPPLY/31 GAL/	1	1
	96-920001-259	. TUBE ASSY,RH FUEL CELL SUPPLY/31 GAL/	1	6
- 48	96-920001-113	. TUBE ASSY,ENGINE FUEL SUPPLY.	2	9
	96-920001-321	. TUBE ASSY,ENGINE FUEL SUPPLY LH	1	10
	96-920001-322	. TUBE ASSY,ENGINE FUEL SUPPLY RH	1	10
	AN931B11-16	. GROMMET	2	5
	AN825-6D	. TEE,ENGINE FUEL SUPPLY TUBE	2	5
	AN910-2D	. BUSHING,FUEL DRAIN REDUCER.	2	5
	AN912-1D	. COUPLING,FUEL DRAIN	2	5
	CCA4850	. VALVE,FUEL DRAIN.	2	5
- 49	96-920001-21	. TUBE ASSY,ENGINE FUEL SUPPLY LH	1	1
	96-920001-213	. TUBE ASSY,ENGINE FUEL SUPPLY LH	1	2
	96-920001-287	. TUBE ASSY,ENGINE FUEL SUPPLY LH	1	18
	96-920001-22	. TUBE ASSY,ENGINE FUEL SUPPLY RH	1	1
	96-920001-214	. TUBE ASSY,ENGINE FUEL SUPPLY RH	1	2
	96-920001-289	. TUBE ASSY,ENGINE FUEL SUPPLY RH	1	18
	96-920001-323	. TUBE ASSY,ENGINE FUEL SUPPLY LH & RH.	2	17
	AN821-6D	. ELBOW,ENGINE FUEL SUPPLY TUBE	2	5
	AN919-12	. REDUCER,ENGINE FUEL SUPPLY TUBE	2	10
- 50	96-920001-23	. TUBE ASSY,FUEL BOOST PUMP INLET LH.	1	12
	96-920001-24	. TUBE ASSY,FUEL BOOST PUMP INLET RH.	1	12
	AN826-6D	. TEE,FUEL STRAINER	2	12
- 51	96-920001-135	. TUBE ASSY,FUEL BOOST PUMP OUTLET LH	1	12
	96-920001-205	. TUBE ASSY,FUEL BOOST PUMP OUTLET LH	1	13
	96-920001-136	. TUBE ASSY,FUEL BOOST PUMP OUTLET RH	1	12
	96-920001-206	. TUBE ASSY,FUEL BOOST PUMP OUTLET RH	1	13
	AN824-6D	. TEE,ENGINE FUEL SUPPLY TUBE	2	12
	AN931-6-16	. GROMMET	2	12
- 52	96-920001-103	. TUBE ASSY,ENGINE FUEL SUPPLY LH	1	12
	96-920001-104	. TUBE ASSY,ENGINE FUEL SUPPLY RH	1	12
- 53	1111-595273	. VALVE,ENGINE FUEL SUPPLY TUBE CHECK	2	12
	50-380170-13	. VALVE,ENGINE FUEL SUPPLY TUBE CHECK . . . . . /ALTERNATE FOR 1111-595273, SUPERSEDES 367-00/	2	12
- 54	96-920001-133	. TUBE ASSY,ENGINE FUEL SUPPLY LH	1	12
	96-920001-134	. TUBE ASSY,ENGINE FUEL SUPPLY RH	1	12
- 55	96-920001-25	. TUBE ASSY,ENGINE FUEL SUPPLY LH	1	1
	96-920001-247	. TUBE ASSY,ENGINE FUEL SUPPLY LH	1	2
	96-920001-26	. TUBE ASSY,ENGINE FUEL SUPPLY RH	1	1
	96-920001-251	. TUBE ASSY,ENGINE FUEL SUPPLY RH	1	2
- 56	96-920001-207	. TUBE ASSY,FUEL BOOST PUMP OUTLET LH	1	13
	96-920001-215	. TUBE ASSY,FUEL BOOST PUMP OUTLET LH	1	14
	96-920001-291	. TUBE ASSY,FUEL BOOST PUMP OUTLET LH	1	10
	96-920001-208	. TUBE ASSY,FUEL BOOST PUMP OUTLET RH	1	13
	96-920001-216	. TUBE ASSY,FUEL BOOST PUMP OUTLET RH	1	14
	96-920001-292	. TUBE ASSY,FUEL BOOST PUMP OUTLET RH	1	10
	AN833-6D	. ELBOW,FUEL BOOST PUMP	2	20
	AN921-8D	. ELBOW,FUEL BOOST PUMP	2	21
	AN924-6D	. NUT	2	20
	AN924-8D	. NUT	2	21
	MS29512-6	. O RING.	2	20
	MS29512-8	. O RING.	2	21

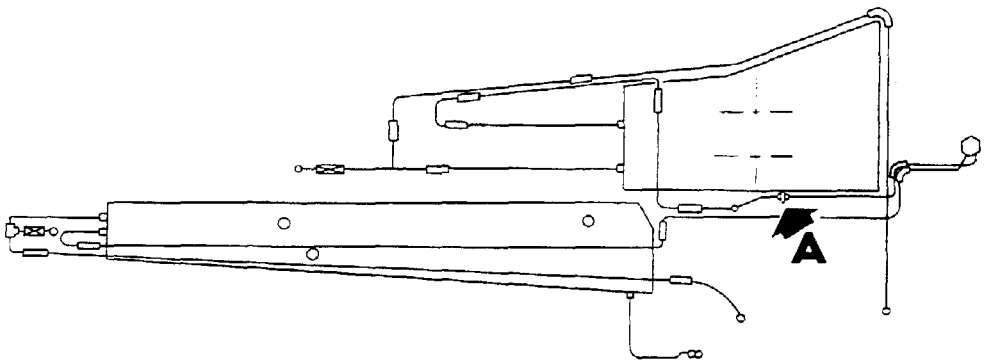

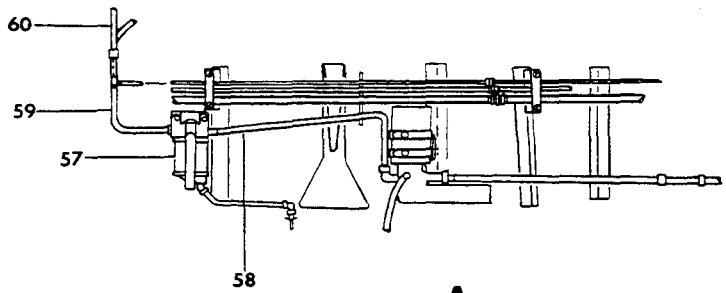

VIEW A

55-281-76

FIGURE 20-01.FUEL DISTRIBUTION
/SHEET 5 OF 6 SHEETS/

SUB-SECT UNIT & ITEM NO.	PART NO.	DESCRIPTION 1 2 3 4 5 6 7	UNITS PER ASSY	USABLE ON CODE
20-01 - 57	G199-80	STRAINER,FUEL	2	1
	R HE760-5	STRAINER,FUEL/SEE CHAPTER 28-20-60/	NP	6
	R G199-105	STRAINER,FUEL/ALTERNATE FOR HE760-5, SEE CHAPTER 28-20-60/	NP	6
	33-199-105-3	STRAINER,FUEL/SUPERSEDES HE760-5 & G199-105 SEE CHAPTER 28-20-60/	2	6
		/ATTACHING PARTS/		
	AN4-14A	BOLT	2	
	AN960-416L	WASHER	2	
	MS20365-428	NUT	2	
		*		
	AN913-1S	PLUG,PIPE	2	5
- 58	AN823-4D	ELBOW,FUEL STRAINER DRAIN	2	5
	96-920001-105	TUBE ASSY,FUEL STRAINER DRAIN	2	1
	96-920001-235	TUBE ASSY,FUEL STRAINER DRAIN	2	6
	AN822-4D	ELBOW,FUEL STRAINER DRAIN TUBE	2	5
	AN910-1D	COUPLING,FUEL STRAINER DRAIN TUBE	2	5
	MS21919-10	CLAMP,SUPPORT	2	5
		/ATTACHING PARTS/		
	AN515-8R8	SCREW	1	
	AN960-8	WASHER	1	
	MS20365-832	NUT	1	
		*		
	AN913-1S	PLUG,PIPE	2	5
	CCA4850	VALVE,FUEL STRAINER DRAINER	2	5
	MS21919DG17	CLAMP,FUEL STRAINER DRAIN VALVE	2	5
		/ATTACHING PARTS/		
	AN520-10	SCREW	1	
	AN960-10	WASHER	1	
	MS20365-1032	NUT	1	
		*		
- 59	96-920001-217	TUBE ASSY,FUEL STRAINER OUTLET LH	1	14
	96-920001-293	TUBE ASSY,FUEL STRAINER OUTLET LH	1	10
	96-920001-218	TUBE ASSY,FUEL STRAINER OUTLET RH	1	14
	96-920001-294	TUBE ASSY,FUEL STRAINER OUTLET RH	1	10
	AN816-6D	FITTING/USED WITH G199-105 STRAINER HAVING 1/4 IN PORTS & 3/8 IN FUEL LINES/	4	6
	AN816-6-6D	FITTING/USED WITH HE760-5 STRAINER HAVING 3/8 IN PORTS & 3/8 IN FUEL LINES/	4	6
	AN816-8D	NIPPLE/USED WITH 33-199-105-3 STRAINER	4	6
- 60	96-920001-297	TUBE ASSY,ENGINE FUEL SUPPLY LH	1	3
	96-920001-301	TUBE ASSY,ENGINE FUEL SUPPLY LH	1	4
	96-920001-299	TUBE ASSY,ENGINE FUEL SUPPLY RH	1	3
	96-920001-303	TUBE ASSY,ENGINE FUEL SUPPLY	1	4
	AN824-6D	ELBOW	2	1
	AN821-6D	ELBOW	2	2
	AN837-6D	ELBOW	2	6
	AN931-6-16	GROMMET	2	9
	AN960-616	WASHER	4	6
	AN924-6D	NUT	2	6
	AN837-6	ELBOW/AT FIREWALL/	2	1
	AN833-6	ELBOW/AT FIREWALL/	2	2
	AN837-8	ELBOW/AT FIREWALL/	2	10
	AN960-916	WASHER/AT FIREWALL/	4	9
	AN960-1216L	WASHER/AT FIREWALL/	2	10
	AN924-6	NUT/AT FIREWALL/	2	5
	AN924-8	NUT/AT FIREWALL/	2	10

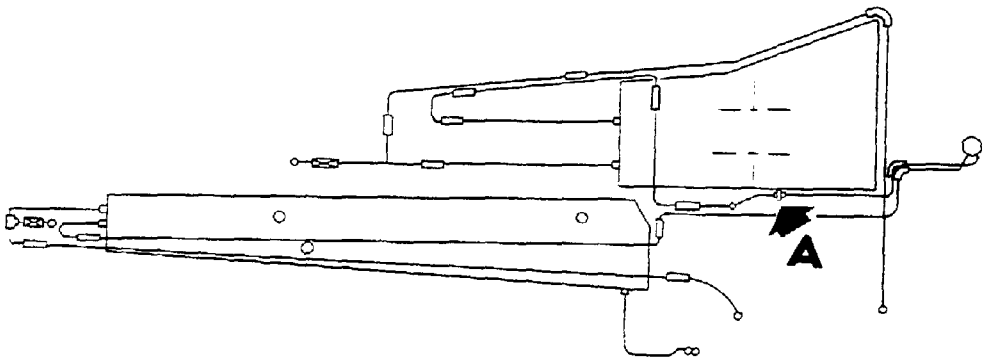

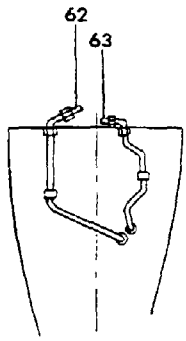

LH NACELLE

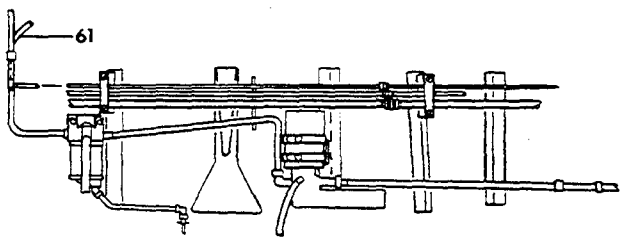

VIEW A

55-281-77

FIGURE 20-01. FUEL DISTRIBUTION
/SHEET 6 OF 6 SHEETS/

SUB-SECT UNIT & ITEM NO.	PART NO.	DESCRIPTION 1 2 3 4 5 6 7	UNITS PER ASSY	USABLE ON CODE
20-01 - 61	96-920001-27	. TUBE ASSY,ENGINE FUEL RETURN LH	1	1
	96-920001-245	. TUBE ASSY,ENGINE FUEL RETURN LH	1	23
	96-920001-221	. TUBE ASSY,ENGINE FUEL RETURN LH	1	4
	96-920001-28	. TUBE ASSY,ENGINE FUEL RETURN RH	1	1
	96-920001-249	. TUBE ASSY,ENGINE FUEL RETURN RH	1	23
	96-920001-227	. TUBE ASSY,ENGINE FUEL RETURN RH	1	4
	AN821-4D	. ELBOW	2	5
	AN931-4-16	. GROMMET	2	5
	AN837-4	. ELBOW/AT FIREWALL/.	2	22
	AN833-4	. ELBOW/AT FIREWALL/.	2	4
	AN960-716	. WASHER/AT FIREWALL/	4	5
	AN924-4	. NUT/AT FIREWALL/.	2	5
- 62	MS28741-6-0230	. HOSE ASSY,ENGINE FUEL SUPPLY LH	1	1
	MS28741-6-0140	. HOSE ASSY,ENGINE FUEL SUPPLY RH	1	1
	MS28741-6-0184	. HOSE ASSY,ENGINE FUEL SUPPLY LH & RH.	2	23
	330995-8-0090	. HOSE ASSY,ENGINE FUEL SUPPLY LH & RH.	2	24
		/SUPERSEDES 156001-8D0100 & 130001-8D0090		
	58-920035-1	. HOSE ASSY,ENGINE FUEL SUPPLY LH & RH.	2	25
		/SUPERSEDES 330995-8-0086/		
	96-920001-311	. CLIP,FUEL LINE SUPPORT.	2	10
- 63	MS28741-4-0250	. HOSE ASSY,ENGINE FUEL RETURN LH	1	1
	MS28741-4-0234	. HOSE ASSY,ENGINE FUEL RETURN RH	1	1
	MS28741-4-0222	. HOSE ASSY,ENGINE FUEL RETURN LH & RH.	2	23
	MS28741-4-0160	. HOSE ASSY,ENGINE FUEL RETURN LH	1	4
	MS28741-4-0250	. HOSE ASSY,ENGINE FUEL RETURN RH	1	4

CODES OF EFFECTIVITY

1 TC-1 THRU TC-420
EXCEPT TC-251

2 TC-251 AND
TC-421 THRU TC-501

3 TC-502 THRU TC-1607

4 TE-1 THRU TE-942
EXCEPT TE-938

5 TC-1 THRU TC-1607
TE-1 THRU TE-942
EXCEPT TE-938

6 TC-251 AND
TC-241 THRU TC-1607
TE-1 THRU TE-942
EXCEPT TE-938

7 TC-1 THRU TC-501
TE-1 THRU TE-767

8 TC-502 THRU TC-1607
TE-768 THRU TE-942
EXCEPT TE-938

9 TC-1 THRU TC-501

10 TC-502 THRU TC-1607
TE-1 THRU TE-942
EXCEPT TE-938

11 TC-251 AND
TC-421 THRU TC-501
TE-1 THRU TE-942
EXCEPT TE-938

12 TC-1 THRU TC-335

13 TC-336 THRU TC-420

14 TC-421 THRU TC-954

15 TC-502 THRU TC-954

16 TC-955 THRU TC-1419
TE-1 THRU TE-856

17 TC-1420 THRU TC-1607
TE-857 THRU TE-942
EXCEPT TE-938

18 TC-502 THRU TC-1419
TE-1 THRU TE-856

19 TC-251 AND
TC-421 THRU TC-1419

20 TC-1 THRU TC-954
TE-1 THRU TE-767

21 TC-955 THRU TC-1607
TE-768 THRU TE-942
EXCEPT TE-938

22 TC-1 THRU TC-1607

23 TC-251 AND
TC-421 THRU TC-1607

24 TE-1 THRU TE-885
EXCEPT TE-875,TE-876
TE-880,TE-882

25 TE-875,TE-876,TE-880
TE-882 AND
TE-886 THRU TE-942
EXCEPT TE-938

26 TC-1 THRU TC-1298
TE-1 THRU TE-767

27 TC-251 AND
TC-421 THRU TC-1298
TE-1 THRU TE-767

28 TC-1299 THRU TC-1607
TE-768 THRU TE-942
EXCEPT TE-938

29 TC-1 THRU TC-250
TC-252 THRU TC-335

"END"

28-20-50
FUEL SELECTOR VALVE

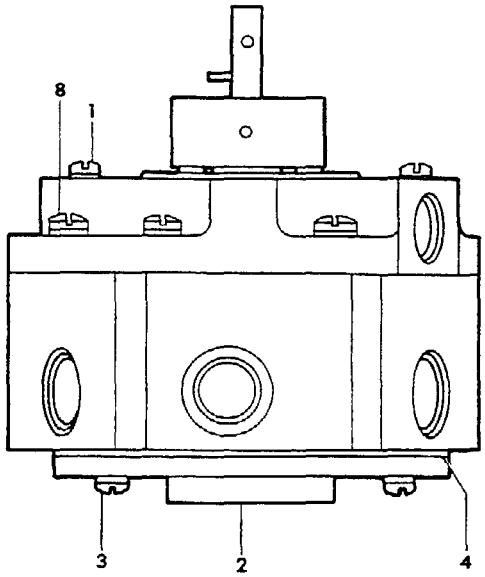

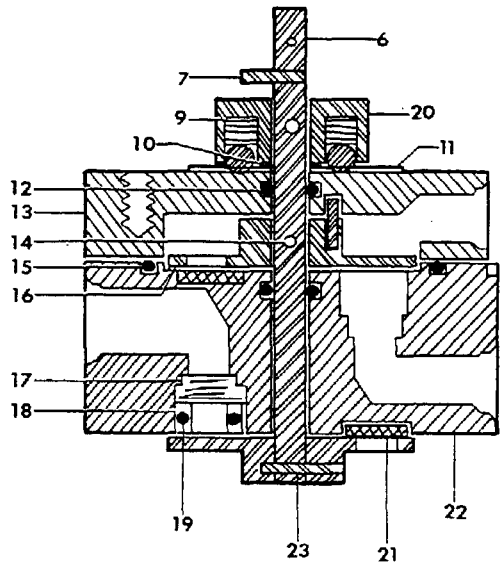

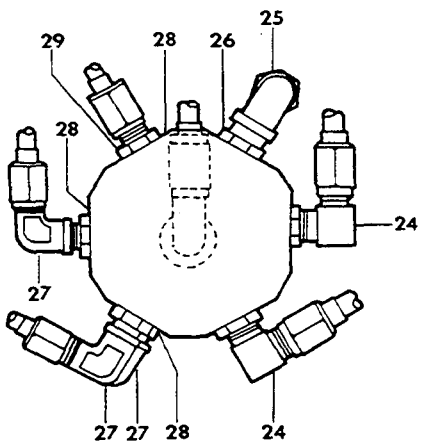

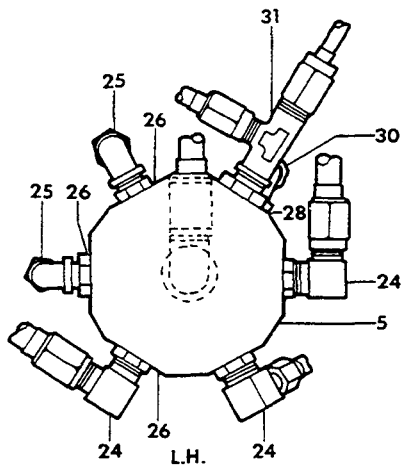

FWD

55-289-1

FIGURE 20-50. FUEL SELECTOR VALVE

ATA CODE & INDEX NO.	PART NO.	DESCRIPTION 1 2 3 4 5 6 7	UNITS PER ASSY	USABLE ON CODE
20-50	96-920001-611	VALVE ASSY,LH FUEL SELECTOR	1	1
	96-920001-612	VALVE ASSY,RH FUEL SELECTOR	1	1
		/ATTACHING PARTS/		
- 1	AN501A416	SCREW	3	
	AN936A416	WASHER	3	
		——+——		
- 2	95-924014-5	. BASE	1	1
		/ATTACHING PARTS/		
- 3	AN500A10-10	. SCREW	4	
	AN935-10	. WASHER	4	
		——+——		
- 4	50-920030-4	. GASKET	1	1
- 5	HE825-2	. VALVE ASSY,FUEL SELECTOR LH	1	1
	HE825-1	. VALVE ASSY,FUEL SELECTOR RH	1	1
- 6	HE1155	. . ROTOR	1	1
- 7	79-022-094-0375	. . PIN,ROLL	3	1
- 8	AN500-8-10	. . SCREW	6	1
	AN935-8L	. . WASHER,LOCK	6	1
- 9	HE189	. . SPRING	2	1
	1/4 INCH	. . BALL,STEEL	2	1
- 10	HE194	. . SHIM	1	1
- 11	HE1116	. . PLATE,DETENT	1	1
- 12	MS29513-10	. . O RING	2	1
- 13	HE1117	. . COVER	1	1
- 14	79-022-094-0750	. . PIN,ROLL	1	1
- 15	MS29513-136	. . O RING	1	1
- 16	HE1156	. . ROTOR	1	1
- 17	HE191	. . SPRING	6	1
	HE193	. . WASHER	6	1
- 18	HE192	. . SEAL	6	1
- 19	MS29513-12	. . O RING	6	1
- 20	HE1114	. . YOKE	1	1
- 21	HE1153-2	. . PLUG,COUNTERBALANCE	4	1
- 22	HE1115	. . BODY	1	1
- 23	A905	. PIN	1	1
		/ATTACHING PARTS/		
	AN380-1-1	. PIN,COTTER	1	
		——+——		
- 24	6C5X-D	. ELBOW	5	1
- 25	AN833-6D	. ELBOW	3	1
	AN924-6D	. NUT	3	1
- 26	MS29512-6	. O RING	3	1
- 27	AN833-4D	. ELBOW	3	1
	AN924-4D	. NUT	4	1
- 28	MS29512-4	. O RING	5	1
- 29	AN832-4D	. UNION	1	1
	AN924-4D	. NUT	1	1
- 30	AN837-4D	. ELBOW	1	1
	AN935-10	. WASHER	4	1
	AN924-4D	. NUT	1	1
- 31	AN804-4D	. TEE	1	1
	AN822-6D	. ELBOW	2	1

CODES OF EFFECTIVITY

1 TC-1 THRU TC-1607
TE-1 THRU TE-942
EXCEPT TE-938

"END"

28-20-60
FUEL FILTER

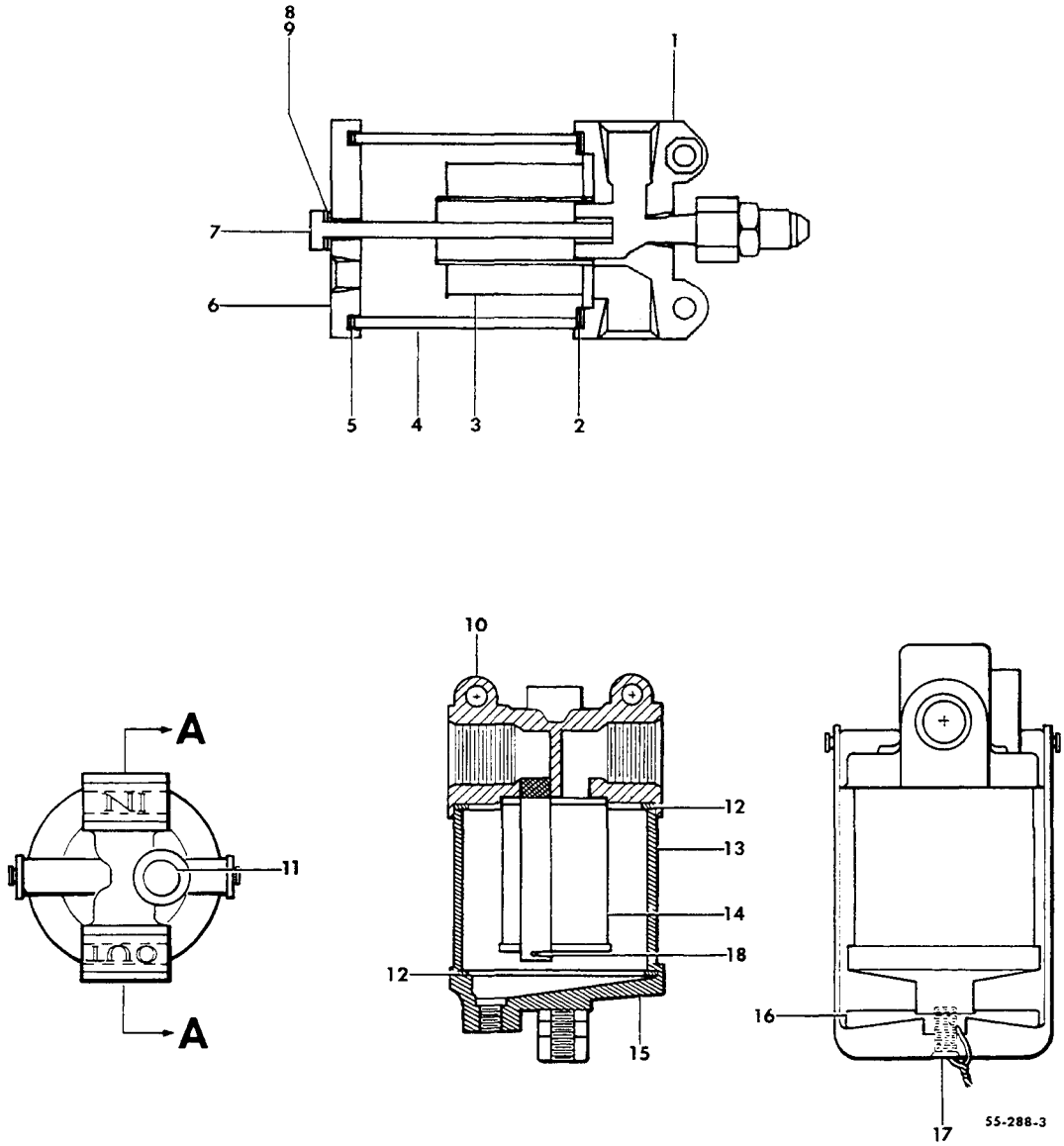

FIGURE 20-60.FILTER,FUEL

SUB-SECT UNIT & ITEM NO.	PART NO.	DESCRIPTION 1 2 3 4 5 6 7	UNITS PER ASSY	USABLE ON CODE
20-60	G199-80	STRAINER,FUEL	2	1
	R HE760-5	STRAINER,FUEL	NP	2
	R G199-105	STRAINER,FUEL/ALTERNATE FOR HE760-5/	NP	2
- 1	HE1530-5	. BODY,STRAINER	1	2
- 2	R HE1526-3	. GASKET,UPPER	1	2
- 3	HE1568-2	. ELEMENT,STRAINER	1	2
- 4	HE1528-6	. CYLINDER,STRAINER/STEEL/	1	2
- 5	HE1526-4	. GASKET,LOWER	1	2
- 6	HE1531	. PLATE,SUMP	1	2
- 7	AN3H31A/M/	. BOLT	1	2
- 8	600-001-10	. SEAL,BOLT	1	2
- 9	AN960-10L	. WASHER	1	2
	AN816-8D	NIPPLE	1	2
	33-199-105-3	STRAINER,FUEL/SUPERSEDES HE760-5 & G199-105/	1	2
- 10	33-199-913	. CAP ASSY	1	2
- 11	AN932C2	. PLUG	1	2
- 12	33-199-6	. GASKET	2	2
- 13	60B095-001	. BOWL,FUEL STRAINER	1	2
- 14	33-199-909	. SCREEN ASSY	1	2
- 15	33-199-1	. BOTTOM,FUEL STRAINER	1	2
- 16	33-199-8	. NUT	1	2
- 17	33-199-7	. BOLT	1	2
- 18	33-199-36	. CLIP,SPRING	1	2
	21-199-35	. PLATE,IDENTIFICATION	1	2

CODES OF EFFECTIVITY

1 TC-1 THRU TC-420
EXCEPT TC-251

2 TC-251 AND
TC-421 THRU TC-1607
TE-1 THRU TE-942
EXCEPT TE-938

"END"

28-25-10
FUEL SELECTOR PANEL

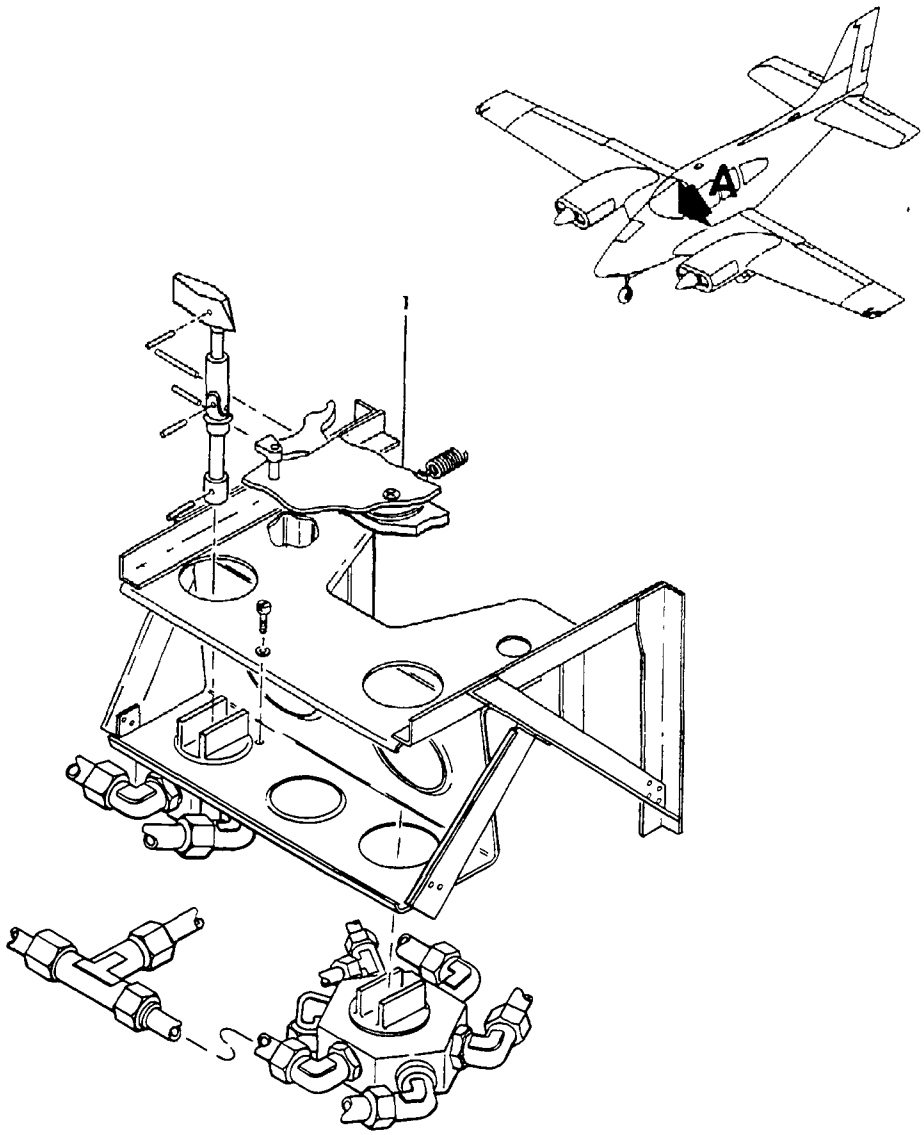

VIEW **A**

55-286-14

FIGURE 25-10.FUEL SELECTOR PANEL
/SHEET 1 OF 3 SHEETS/

SUB-SECT UNIT & ITEM NO.	PART NO.	DESCRIPTION 1 2 3 4 5 6 7	UNITS PER ASSY	USABLE ON CODE
25-10	96-920001	FUEL SYSTEM INSTL,112 GALLON.	NP	1
	96-920001-155	FUEL SYSTEM INSTL,140 GALLON.	NP	1
	96-920001-231	FUEL SYSTEM INSTL,114 GALLON.	NP	2
	96-920001-233	FUEL SYSTEM INSTL,142 GALLON.	NP	2
	96-920001-283	FUEL SYSTEM INSTL,112 GALLON.	NP	3
	96-920001-285	FUEL SYSTEM INSTL,142 GALLON.	NP	3
	96-920001-265	FUEL SYSTEM INSTL,112 GALLON.	NP	4
	96-920001-267	FUEL SYSTEM INSTL,142 GALLON.	NP	4
	96-920001-632	. VALVE ASSY,FUEL SELECTOR. . . . . /USED ON 112 GALLON INSTL/	1	5
	96-920001-620	. VALVE ASSY,FUEL SELECTOR. . . . . /USED ON 140 GALLON INSTL/	1	1
	96-920001-630	. VALVE ASSY,FUEL SELECTOR. . . . . /USED ON 114 GALLON INSTL/	1	2
	96-920001-631	. VALVE ASSY,FUEL SELECTOR. . . . . /USED ON 142 GALLON INSTL/	1	6
	96-920001-638	. VALVE ASSY,FUEL SELECTOR. . . . . /USED ON 112 GALLON INSTL/	1	7
	96-920001-637	. VALVE ASSY,FUEL SELECTOR. . . . . /USED ON 142 GALLON INSTL/	1	7
- 1	96-920011-1	. . PANEL ASSY,FUEL SELECTOR/112 GAL./.	1	8
	96-920011-9	. . . PLATE	1	8
	FF520-15	. . . BUSHING	2	8
	96-924011	. . . PLACARD	1	8
	R 96-920011-3	. . PANEL ASSY,FUEL SELECTOR/140 GAL./.	1	20
	R 96-920011-9	. . . PLATE	1	20
	R FF520-15	. . . BUSHING	2	20
	R 96-924011-1	. . . PLACARD	1	20
	96-920011-15	. . PANEL ASSY,FUEL SELECTOR/114 GAL./.	1	2
	96-920011-9	. . . PLATE	1	2
	FF520-15	. . . BUSHING	2	2
	96-924011-3	. . . PLACARD	1	2
	96-920011-17	. . PANEL ASSY,FUEL SELECTOR/142 GAL./.	1	6
	96-920011-9	. . . PLATE	1	6
	FF520-15	. . . BUSHING	2	6
	96-924011-5	. . . PLACARD	1	6
	96-920011-25	. . PANEL ASSY,FUEL SELECTOR/112 GAL./.	1	10
	96-920011-29	. . . PLATE	1	10
	FF520-15	. . . BUSHING	2	10
	96-924011	. . . PLACARD	1	10
	96-920011-27	. . PANEL ASSY,FUEL SELECTOR/142 GAL./.	1	10
	96-920011-29	. . . PLATE	1	10
	FF520-15	. . . BUSHING	2	10
	96-924011-5	. . . PLACARD	1	10
	R 96-924028-1	. . PLATE/112 GAL./ . . . . . /ATTACHING PARTS/	1	11
	NAS384-6	. . SCREW	6	
	NAS391-6	. . WASHER.	6	
	96-924028-3	. . PLATE/142 GAL./ . . . . . /ATTACHING PARTS/	1	11
	NAS384-6-6	. . SCREW	6	
	NAS391-6	. . WASHER.	6	
	FF520-15	. . BUSHING	2	11
	96-924029-1	. . PLATE,INSTRUCTION . . . . . /ATTACHING PARTS/	1	11
	NAS384-6-6	. . SCREW	2	
	NAS391-6	. . WASHER.	2	
	NAS446-2-1	. . NUT	2	

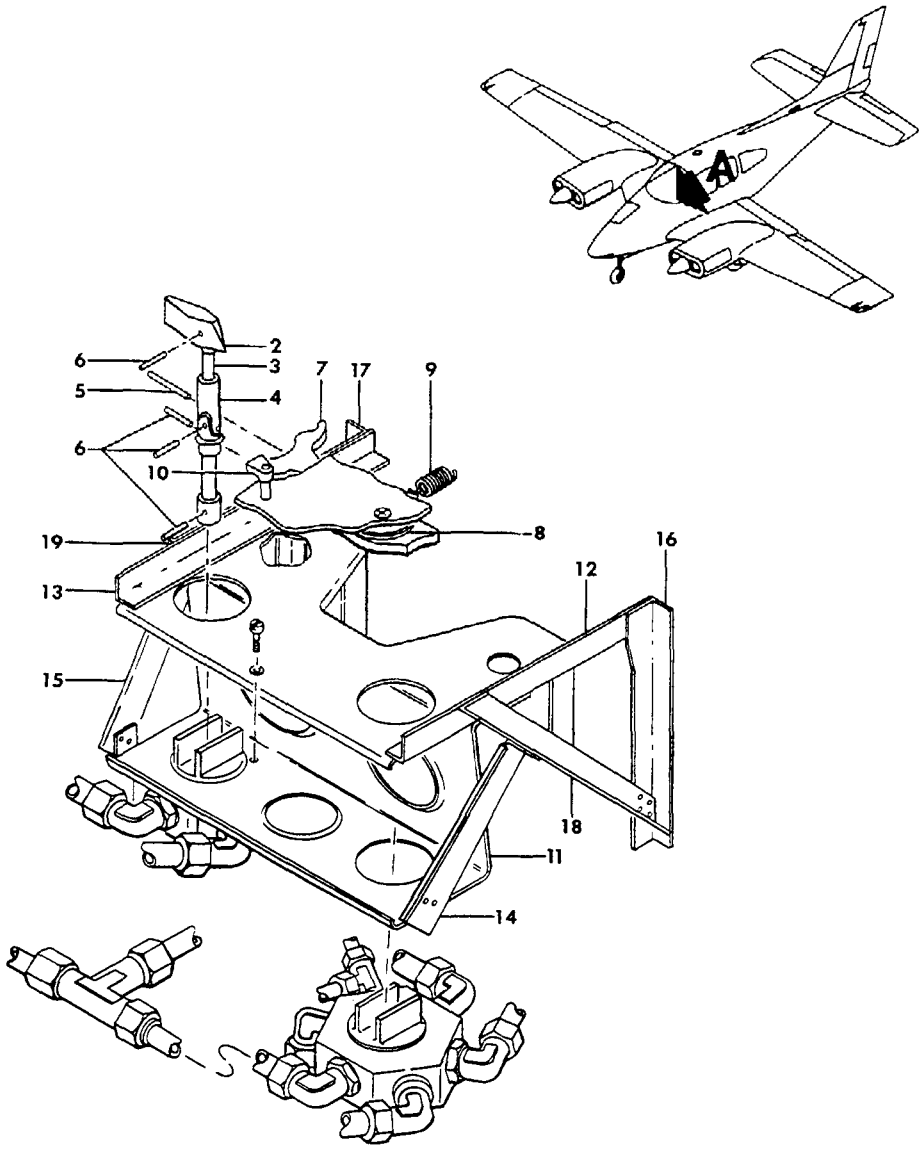

VIEW **A**

55-286-15

FIGURE 25-10.FUEL SELECTOR PANEL
/SHEET 2 OF 3 SHEETS/

ATA CODE & INDEX NO.	PART NO.	DESCRIPTION 1 2 3 4 5 6 7	UNITS PER ASSY	USABLE ON CODE
25-10 - 2	95-924026	HANDLE,FUEL CONTROL LH & RH	2	9
- 3	96-920001-191	SHAFT,HANDLE.	2	9
- 4	MS20270B8	JOINT,UNIVERSAL	2	9
		/ATTACHING PARTS/		
- 5	96-920001-193	PIN	2	
- 6	52-028-125-0500	PIN	4	
- 7	96-920012-5	CAM/SUPERSEDES 96-920012 & 96-920012-3/	1	9
		/ATTACHING PARTS/		
	MS35206-267	SCREW	1	
	AN970-3	WASHER.	4	
- 8	100696D-ZF013	SPACER.	1	
	MS21044N3	NUT	1	
- 9	100942H0010-10	SPRING.	1	9
		/ATTACHING PARTS/		
	AN515-8R	SCREW	1	12
	MS35206-247	SCREW	1	13
	AN960-8	WASHER.	1	12
	NAS43-3-16	SPACER.	1	13
	MS20365-832	NUT	1	12
	MS21051-08	NUT	1	13
	96-920001-203	CLIP.	2	9
		/ATTACHING PARTS/		
	AN515-10R	SCREW	1	
	AN960-10	WASHER.	1	
	MS20365-1032	NUT	1	
- 10	A8970-1-327	LIGHT,POST.	2	17
	A8970B1-327	LIGHT,POST.	2	18
	96-920001-17	BRACKET ASSY,FUEL SELECTOR VALVE.	1	14
		/ORDER 96-924026-3/		
	96-924026-3	BRACKET ASSY,FUEL SELECTOR VALVE.	1	9
		/SUPERSEDES 96-920001-17/		
- 11	96-920001-19	BRACKET,SELECTOR VALVE.	1	14
	96-924026-5	BRACKET,SELECTOR VALVE.	1	15
	96-924026-9	ANGLE,SELECTOR VALVE COVER PLATE ATTACH	2	15
	SL211-3-1	NUT,CLIP.	2	15
- 12	96-920001-199	ANGLE,LH.	1	14
	96-924026-7	ANGLE,LH.	1	15
- 13	96-920001-200	ANGLE,RH.	1	14
	96-924026-8	ANGLE,RH.	1	15
- 14	96-920001-201	ANGLE,LH.	1	14
- 15	96-920001-202	ANGLE,RH.	1	14
- 16	95-924013-3	ANGLE,LH.	1	14
- 17	95-924013-4	ANGLE,RH.	1	14
- 18	95-924013-5	ANGLE,LH.	1	14
- 19	95-924013-6	ANGLE,RH.	1	14

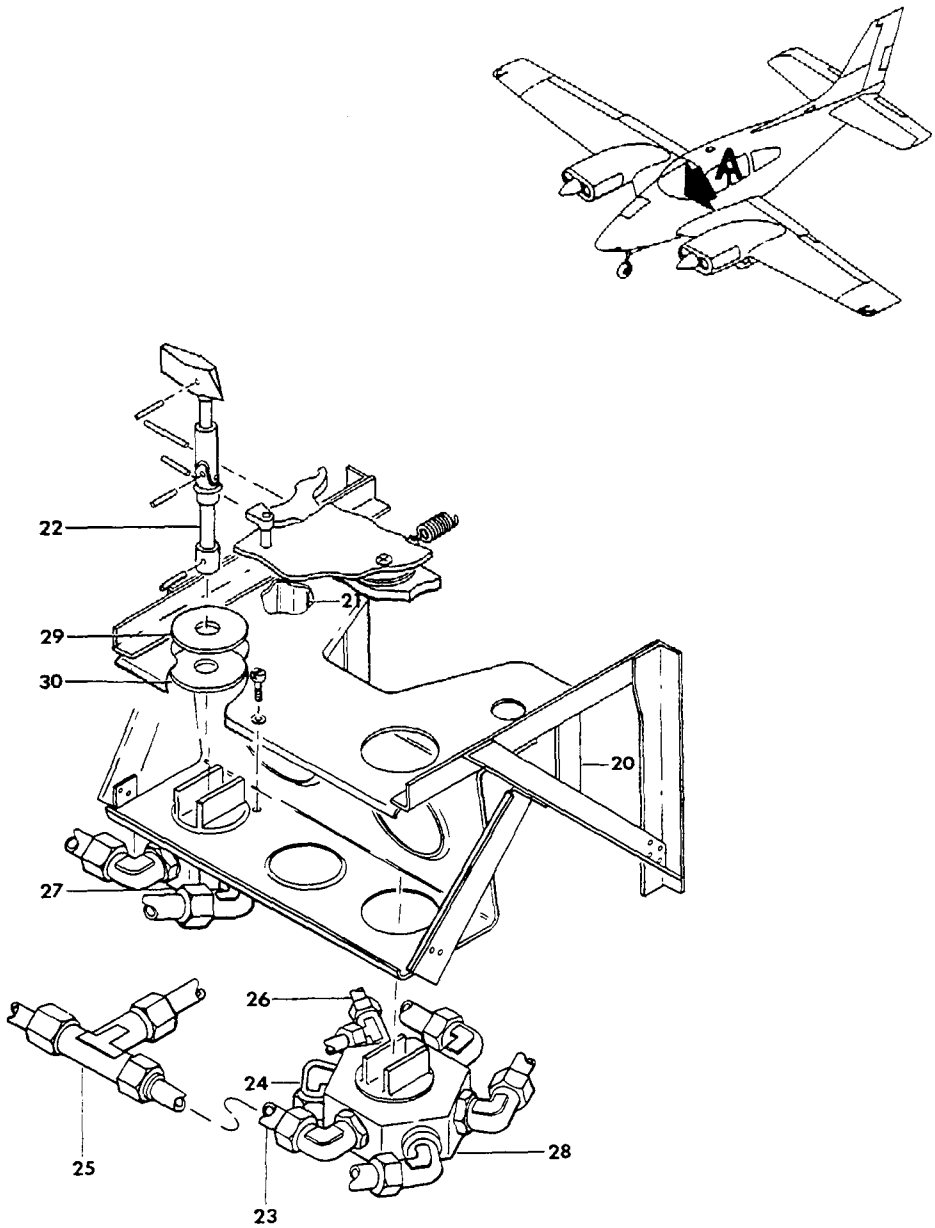

VIEW **A**

55-286-16

FIGURE 25-10.FUEL SELECTOR PANEL
/SHEET 3 OF 3 SHEETS/

SUB-SECT UNIT & ITEM NO.	PART NO.	DESCRIPTION 1 2 3 4 5 6 7	UNITS PER ASSY	USABLE ON CODE
25-10 - 20	95-924013-15	. . . ANGLE,LH.	1	14
- 21	95-924013-16	. . . ANGLE,RH.	1	14
- 22	96-920001-79	. . TUBE.	2	9
- 23	96-920001-127	. . TUBE,RH ENGINE FUEL CROSSFEED SUPPLY. . . .	1	9
- 24	96-920001-89	. . TUBE,LH ENGINE FUEL CROSSFEED SUPPLY. . . .	1	9
- 25	AN824-6D	. . TEE	2	9
- 26	96-920001-115	. . TUBE,ENGINE FUEL SUPPLY	2	9
- 27	96-920001-611	. . VALVE ASSY,FUEL SELECTOR LH . . . . . /SEE CHAPTER 28-20-50/	1	9
- 28	96-920001-612	. . VALVE ASSY,FUEL SELECTOR RH . . . . . /SEE CHAPTER 28-20-50/	1	9
- 29	R 95-924015-5	. PLATE ASSY,FUEL SELECTOR IDENTIFICATION LH. .	1	19
	R 95-924015-7	. PLATE ASSY,FUEL SELECTOR IDENTIFICATION LH. .	1	19
	R 95-924015-6	. PLATE ASSY,FUEL SELECTOR IDENTIFICATION RH. .	1	19
	R 95-924015-8	. PLATE ASSY,FUEL SELECTOR IDENTIFICATION RH. .	1	19
	R 95-924015-3	. . PLATE,FUEL SELECTOR IDENTIFICATION.	1	19
	R 95-924020-1	. . PLACARD,FUEL SELECTOR IDENTIFICATION LH . .	1	19
	R 95-924021-1	. . PLACARD,FUEL SELECTOR IDENTIFICATION LH . .	1	19
	R 95-924020	. . PLACARD,FUEL SELECTOR IDENTIFICATION RH . .	1	19
	R 95-924021	. . PLACARD,FUEL SELECTOR IDENTIFICATION RH . .	1	19
- 30	R 96-920001-125	. PLATE,FUEL SELECTOR IDENTIFICATION BACKING. .	2	19

CODES OF EFFECTIVITY

1	TC-1 THRU TC-420 EXCEPT TC-251	2	TC-251 AND TC-421 THRU TC-501
3	TC-502 THRU TC-1607	4	TE-1 THRU TE-942 EXCEPT TE-938
5	TC-1 THRU TC-1298 TE-1 THRU TE-767	6	TC-251 AND TC-421 THRU TC-1298 TE-1 THRU TE-767
7	TC-1299 THRU TC-1607 TE-768 THRU TE-942 EXCEPT TE-938	8	TC-1 THRU TC-420 TC-502 THRU TC-1298 EXCEPT TC-251 TE-1 THRU TE-767
9	TC-1 THRU TC-1607 TE-1 THRU TE-942 EXCEPT TE-938	10	TC-1299 THRU TC-1425 TE-768 THRU TE-851
11	TC-1426 THRU TC-1607 TE-852 THRU TE-942 EXCEPT TE-938	12	TC-1 THRU TC-1460 TE-1 THRU TE-871
13	TC-1461 THRU TC-1607 TE-872 THRU TE-942 EXCEPT TE-938	14	TC-1 THRU TC-1441 TE-1 THRU TE-862
15	TC-1442 THRU TC-1607 TE-863 THRU TE-942 EXCEPT TE-938	16	TC-251 AND TC-421 THRU TC-1607 TE-1 THRU TE-942 EXCEPT TE-938
17	TC-1 THRU TC-501 TE-1 THRU TE-767	18	TC-502 THRU TC-1607 TE-768 THRU TE-942 EXCEPT TE-938
19	TC-1 THRU TC-180	20	TC-181 THRU TC-1607

CHAPTER

30

ICE AND RAIN PROTECTION

LIST OF PAGES & TABLE OF CONTENTS FOR CHAPTER 30-00-00 ICE AND RAIN PROTECTION

CHAP/SUB-SECT & UNIT	PAGE NO.	EFFECTIVE DATE	TABLE OF CONTENTS
30-00-00	1	04/05/85	LIST OF PAGES & TABLE OF CONTENTS
30-00-00	2	04/05/85	
30-10-01	1	03/10/78	SURFACE DEICER
30-10-01	2	03/10/78	TC-1 THRU TC-1402 EXCEPT TC-350
30-10-01	3	03/10/78	
30-10-01	4	03/10/78	
30-10-01	5	03/10/78	
30-10-10	1	04/30/84	SURFACE DEICER/AUTOMATIC/
30-10-10	2	03/10/78	TC-483 THRU TC-1402
30-10-10	3	03/10/78	
30-10-10	4	03/10/78	
30-10-10	5	03/10/78	
30-10-10	6	03/10/78	
30-10-10	7	03/10/78	
30-10-20	1	04/30/84	SURFACE DEICER/AUTOMATIC/
30-10-20	2	03/10/78	TC-502 THRU TC-1607
30-10-20	3	04/05/85	TE-1 THRU TE-451 AND TC-350
30-10-20	4	03/10/78	
30-10-20	5	04/30/84	
30-10-20	6	03/10/78	
30-10-20	7	03/10/78	
30-10-30	1	03/10/78	SURFACE DEICER
30-10-30	2	03/10/78	TE-452 THRU TE-942 EXCEPT TE-938
30-10-30	3	03/10/78	
30-10-30	4	03/10/78	
30-10-30	5	04/05/85	
30-10-30	6	03/10/78	
30-10-30	7	03/10/78	
30-10-30	8	03/10/78	
30-10-30	9	03/10/78	
30-30-01	1	03/10/78	HEATED PITOT
30-30-01	2	03/10/78	
30-30-01	3	03/10/78	
30-40-01	1	03/10/78	WINDSHIELD ANTI-ICE
30-40-01	2	03/10/78	
30-40-01	3	03/10/78	
30-40-10	1	03/10/78	WINDSHIELD DEFROST
30-40-10	2	03/10/78	
30-40-10	3	03/10/78	
30-60-01	1	03/10/78	PROPELLER ALCOHOL ANTI-ICE
30-60-01	2	03/10/78	
30-60-01	3	03/10/78	
30-60-01	4	03/10/78	
30-60-01	5	04/30/84	
30-60-01	6	03/10/78	
30-60-01	7	04/05/85	
30-60-10	1	03/10/78	PROPELLER ELECTRIC ANTI-ICE/2 BLADE/
30-60-10	2	03/10/78	TC-350,TC-715,TC-874 THRU TC-1451
30-60-10	3	03/10/78	TE-1 THRU TE-863
30-60-10	4	03/10/78	
30-60-10	5	04/05/85	

LIST OF PAGES & TABLE OF CONTENTS
FOR
CHAPTER 30-00-00 ICE AND RAIN PROTECTION

CHAP/SUB-SECT & UNIT	PAGE NO.	EFFECTIVE DATE	TABLE OF CONTENTS
30-62-01	1	03/10/78	ELECTROTHERMAL PROPELLER DEICER . . . . .
30-62-01	2	03/10/78	TC-1452 THRU TC-1607
30-62-01	3	03/10/78	
30-62-01	4	03/10/78	
30-62-01	5	03/10/78	
30-64-01	1	03/10/78	ELECTROTHERMAL PROPELLER DEICER . . . . .
30-64-01	2	03/10/78	TE-864 THRU TE-942 EXCEPT TE-938
30-64-01	3	03/10/78	
30-64-01	4	03/10/78	
30-64-01	5	03/10/78	

30-10-01
SURFACE DEICER
TC-1 THRU TC-1402 EXCEPT TC-350

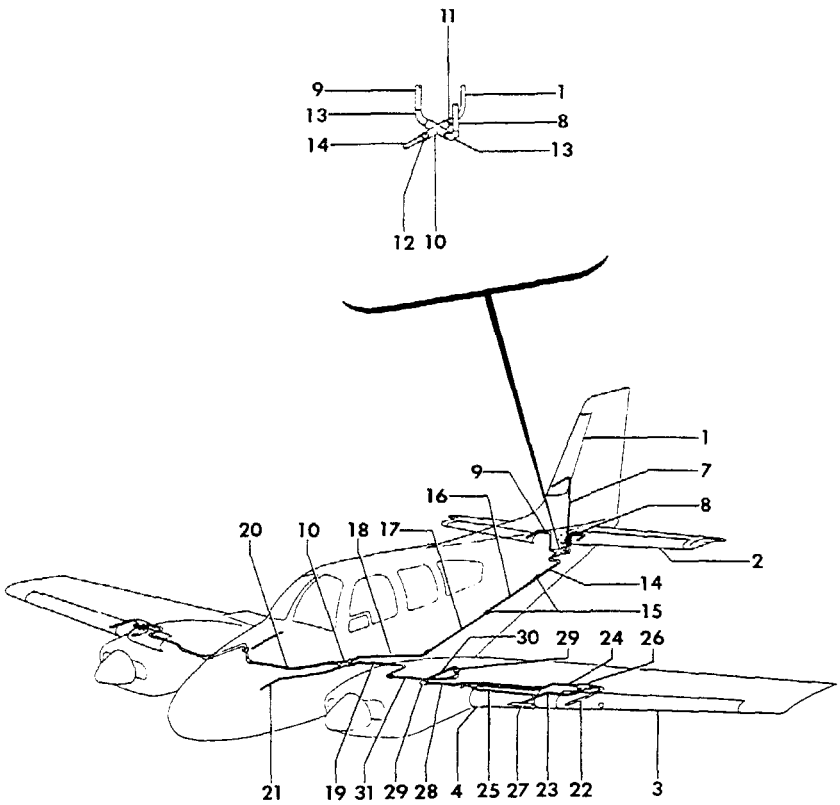

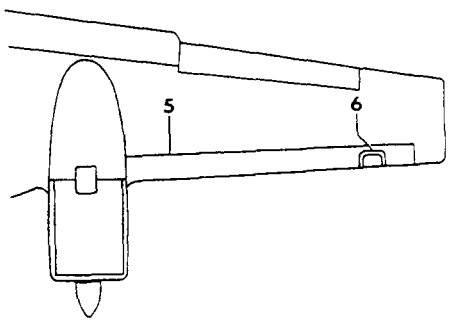

55-193-29

FIGURE 10-01.SURFACE DEICER
/SHEET 1 OF 2 SHEETS/

ATA CODE & INDEX NO.	PART NO.	DESCRIPTION 1 2 3 4 5 6 7	UNITS PER ASSY	USABLE ON CODE
10-01	95-970000-129	SURFACE DEICER INSTL.	NP	8
	95-970000-175	SURFACE DEICER INSTL.	NP	9
	95-970000-185	SURFACE DEICER INSTL.	NP	6
- 1	23S2004-7-1	. BOOT,DEICER/VERTICAL STAB/.	1	11
- 2	23S2004-5-1	. BOOT,DEICER/HORIZONTAL STAB/LH.	1	11
	23S2004-5-2	. BOOT,DEICER/HORIZONTAL STAB/RH.	1	11
- 3	23S2004-2-1	. BOOT,DEICER/OUTBD WING/LH	1	8
	23S2004-2-2	. BOOT,DEICER/OUTBD WING/RH	1	8
- 4	23S2004-11-1	. BOOT,DEICER/INBD WING/LH.	1	8
	23S2004-11-2	. BOOT,DEICER/INBD WING/RH.	1	8
- 5	23S2004-14-1	. BOOT,DEICER/WING/LH	1	10
	23S2004-14-2	. BOOT,DEICER/WING/RH	1	10
- 6	95-970000-179	. RETAINER,LANDING LIGHT/LH/.	1	10
	95-970000-180	. RETAINER,LANDING LIGHT/RH/.	1	10
- 7	95-970000-131	. HOSE,DEICER/VERTICAL STAB/.	1	11
- 8	95-970000-269	. TUBE ASSY,DEICER/LH HORIZONTAL STAB/.	1	11
- 9	95-970000-275	. TUBE ASSY,DEICER/RH HORIZONTAL STAB/.	1	11
	AN737RM26	. CLAMP,TUBE.	AR	11
- 10	AN918-2D	. CROSS	2	11
- 11	AN840-6D	. NIPPLE/USED 1 ON AFT & 2 ON FWD CROSS/. . . .	3	11
- 12	AN816-6D	. UNION/USED ON AFT CROSS ONLY/	2	11
- 13	AN842-6D	. ELBOW /USED 2 ON AFT & FWD CROSS/	4	11
- 14	95-970000-121	. TUBE ASSY	1	11
- 15	AN832-6D	. UNION	2	11
	AN960-916	. WASHER.	2	11
	AN924-4D	. NUT	2	11
- 16	95-970000-119	. TUBE ASSY	1	11
- 17	95-970000-27	. TUBE ASSY	1	11
- 18	95-970000-295	. TUBE ASSY/SUPERSEDES 95-970000-29/.	1	11
- 19	95-970000-193	. TUBE ASSY/SUPERSEDES 95-970000-33/.	1	11
- 20	95-970000-191	. TUBE ASSY/SUPERSEDES 95-970000-17/.	1	11
- 21	95-970000-105	. TUBE ASSY/DEICER PRESSURE/.	1	11
- 22	95-970000-209	. TUBE ASSY,DEICER/WING/SUPERSEDES 95-970000-5/	2	8
- 23	95-970000-215	. TUBE ASSY,DEICER/WING/SUPERSEDES 95-970000-7/	2	8
- 24	95-970000-221	. TUBE ASSY,DEICER/WING/SUPERSEDES 97-970000-9/	2	8
- 25	95-970000-195	. TUBE ASSY,DEICER/WG/SUPERSEDES 97-970000-149/	2	8
- 26	AN917-2D	. TEE	2	8
	AN840-6D	. NIPPLE.	6	8
- 27	95-970000-107	. STRIP,STALL WARNING	1	11
- 28	95-970000-153	. TUBE ASSY,DEICER/LH WING/	1	11
	95-970000-154	. TUBE ASSY,DEICER/RH WING/	1	11
- 29	AN821-6D	. ELBOW	4	11
- 30	95-970000-57	. TUBE ASSY,DEICER/WING/.	2	11
- 31	95-970000-15	. TUBE ASSY,DEICER/LH WING/	1	11
	95-970000-16	. TUBE ASSY,DEICER/RH WING/	1	11

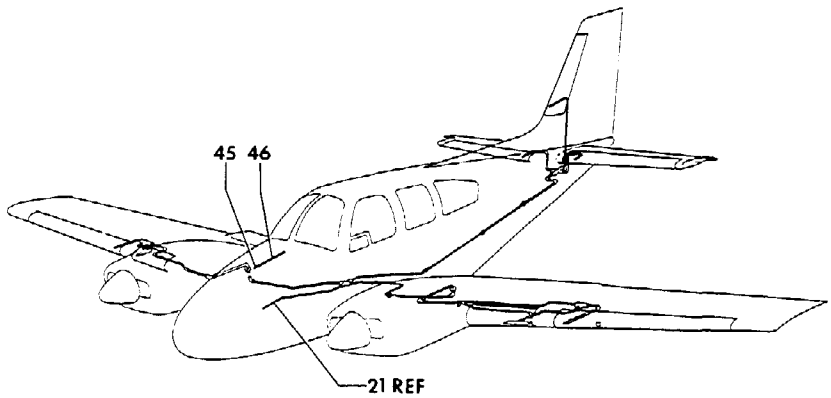

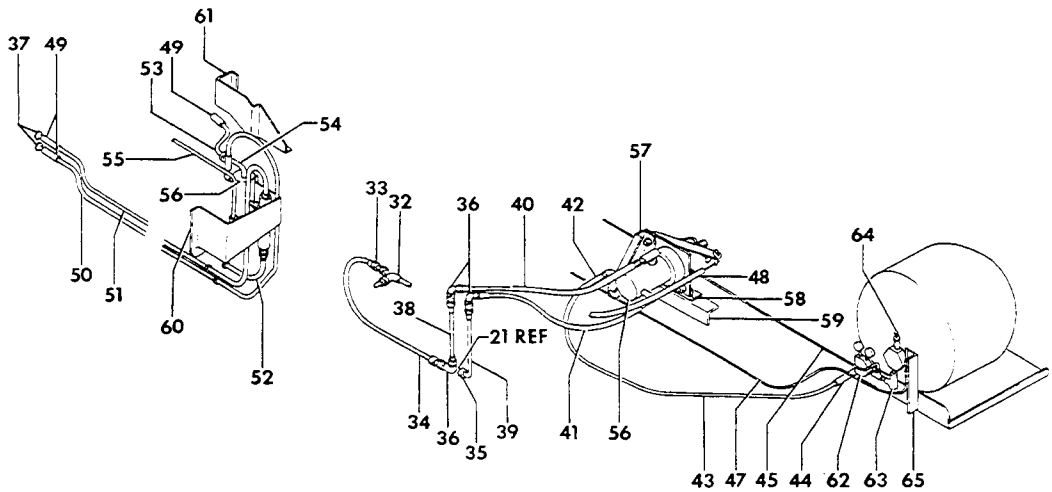

55-193-30

FIGURE 10-01.SURFACE DEICER
/SHEET 2 OF 2 SHEETS/

ATA CODE & INDEX NO.	PART NO.	DESCRIPTION 1 2 3 4 5 6 7	UNITS PER ASSY	USABLE ON CODE
10-01 - 32	95-970000-1	. TEE/DEICER VACUUM/.	1	11
- 33	AN816-6D	. NIPPLE.	1	11
- 34	95-970000-97	. TUBE ASSY,DEICER/VACUUM/.	1	11
- 35	AN832-6D	. UNION	1	1
- 36	AN833-6D	. ELBOW	3	1
- 37	AN807-6D	. ADAPTER	2	2
- 38	95-970000-93	. TUBE ASSY/VACUUM/	1	1
- 39	95-970000-95	. TUBE ASSY/PRESSURE OUT/	1	1
- 40	95-970000-257	. TUBE ASSY/VACUUM/SUPERSEDES 95-970000-87/ . .	1	1
- 41	95-970000-263	. TUBE ASSY/PRESS OUT/SUPERSEDES 95-970000-91/.	1	1
- 42	95-970000-245	. TUBE ASSY/PRESS IN/SUPERSEDES 95-970000-99/ .	1	1
- 43	95-970000-101	. TUBE ASSY/PRESSURE IN/.	1	1
- 44	95-970000-239	. TUBE ASSY/PRESS IN/SUPERSEDES 95-970000-37/ .	1	1
- 45	95-970000-55	. TUBE ASSY/DEICER PRESSURE/.	1	1
	95-970000-171	. TUBE ASSY/DEICER PRESSURE/.	1	2
- 46	MS28741-4-023D	. HOSE ASSY/DEICER PRESSURE/.	1	11
	50-380027	. GAGE,DEICER PRESSURE.	1	11
	A8970-1-327	. POST LIGHT.	1	11
	168-3	. SWITCH,STALL WARNING.	1	11
- 47	3D1247	. CABLE ASSY,RESERVOIR CONTROL.	1	11
- 48	3D1349	. CABLE ASSY,DISTRIBUTOR VALVE CONTROL.	1	1
- 49	95-970000-223	. TUBE ASSY,CONNECTING/SUPERSEDES 95-970000-161	5	5
- 50	95-970000-227	. TUBE ASSY/VACUUM/SUPERSEDES 95-970000-155/. .	1	2
- 51	95-970000-287	. TUBE ASSY/PRESS OUT/SUPERSEDES 95-970000-157/	1	2
- 52	95-970000-165	. TUBE ASSY/DEICER VENT/.	1	2
	AN911-2D	. NIPPLE/DEICER VENT/	1	2
	AN840-6D	. ADAPTER/DEICER VENT/.	1	2
- 53	95-970000-159	. TUBE ASSY/PRESSURE IN/.	1	5
- 54	95-970000-169	. TUBE ASSY/PRESSURE IN/.	1	5
	95-970000-183	. TUBE ASSY/PRESSURE IN/.	1	6
	AN840-6D	. ADAPTER/PRESSURE IN TUBE/	1	6
- 55	B58291-1	. CABLE ASSY,DISTRIBUTOR VALVE CONTROL.	1	5
	3A2302-4	. CABLE ASSY,DISTRIBUTOR VALVE CONTROL.	1	6
- 56	3D1348	. VALVE ASSY,DEICER DISTRIBUTOR	1	11
- 57	95-970000-113	. SUPPORT	1	5
	95-410030-142	. SUPPORT	1	6
- 58	95-970000-89	. ANGLE	1	11
- 59	95-970000-115	. ANGLE ASSY,SUPPORT.	1	1
	95-970000-189	. DEFLECTOR,DISTRIBUTOR VALVE	1	6
- 60	95-970000-163	. COVER	1	2
- 61	95-970000-167	. COVER	1	2
	5D1048	. RESERVOIR ASSY,DEICER	1	11
- 62	3368-5	. . REGULATOR ASSY.	1	11
- 63	3368-4	. . VALVE ASSY,SHUT OFF	1	11
- 64	AN6287-1	. . VALVE ASSY,FILLER	1	11
- 65	95-970000-123	. . ANGLE	1	11

CODES OF EFFECTIVITY

1	TC-1 THRU TC-120	2	TC-121 THRU TC-1402
3	TC-1 THRU TC-934	4	TC-935 THRU TC-1402
5	TC-1 THRU TC-403	6	TC-404 THRU TC-1402
7	TC-898 THRU TC-1402	8	TC-1 THRU TC-399
9	TC-400 THRU TC-403	10	TC-400 THRU TC-1402
11	TC-1 THRU TC-1402		

"END"

30-10-10
SURFACE DEICER/AUTOMATIC/
TC-483 THRU TC-1402

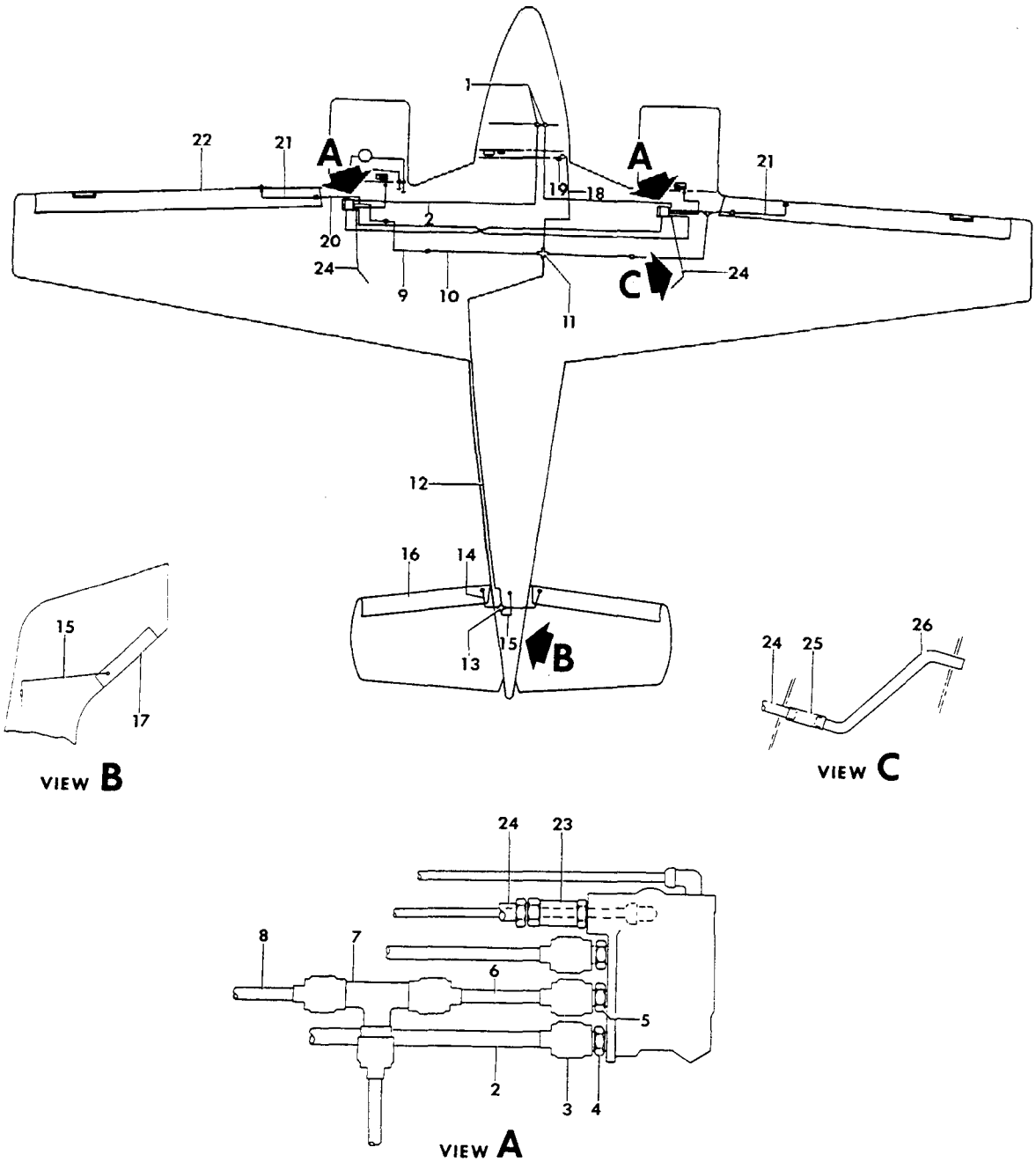

B55-193-31

FIGURE 10-10. SURFACE DEICER
/SHEET 1 OF 3 SHEETS/

ATA CODE & INDEX NO.	PART NO.	DESCRIPTION 1 2 3 4 5 6 7	UNITS PER ASSY	USABLE ON CODE
10-10	96-970001-1	SURFACE DEICER SYS,AUTOMATIC.	NP	9
	96-970001-79	SURFACE DEICER SYS,AUTOMATIC/WITH AUTOPILOT/.	NP	11
- 1	268P3/8-1/4	. CONNECTOR	2	9
- 2	96-970001-63	. TUBE ASSY,LH.	1	9
	96-970001-65	. TUBE ASSY,RH.	1	9
- 3	AN910-3D	. COUPLING.	2	9
	AN816-8D	. NIPPLE.	2	9
- 4	268P3/8-3/8	. CONNECTOR	2	9
- 5	AN919-12D	. REDUCER	2	9
- 6	96-970001-23	. TUBE ASSY	2	3
	96-970001-153	. TUBE ASSY,LH.	1	4
- 7	AN824-6D	. TEE	2	9
- 8	96-970001-33	. TUBE ASSY,LH.	1	3
	96-970001-149	. TUBE ASSY,LH.	1	4
	96-970001-19	. TUBE ASSY,RH.	1	3
	96-970001-155	. TUBE ASSY,RH.	1	4
- 9	96-970001-53	. TUBE ASSY	1	9
	96-970001-54	. TUBE ASSY	1	9
- 10	95-970000-33	. HOSE,LH	1	9
	96-970001-173	. TUBE ASSY,RH/SUPERSEDES 95-970000-17/	1	9
- 11	AN918-2D	. CROSS	1	9
	AN912-2D	. BUSHING	1	9
	AN911-2D	. NIPPLE.	1	9
	AN842-6D	. ELBOW	2	9
- 12	96-970001-11	. TUBE ASSY	1	9
- 13	AN918-3D	. CROSS	1	9
- 14	96-970001-167	. TUBE ASSY,LH/SUPERSEDES 96-970001-7/.	1	9
	96-970001-165	. TUBE ASSY,RH/SUPERSEDES 96-970001-5/.	1	9
- 15	96-970001-171	. TUBE ASSY	1	9
- 16	23S2004-5-1	. BOOT,DEICER/HORIZONTAL STABILIZER LH/	1	9
	23S2004-5-2	. BOOT,DEICER/HORIZONTAL STABILIZER RH/	1	9
- 17	23S2004-7-1	. BOOT,DEICER/VERTICAL STABILIZER/.	1	9
- 18	96-970001-47	. TUBE ASSY	1	9
	50-380016-11	. GAGE,DEICER PRESSURE.	1	7
- 19	50-380016-13	. GAGE,DEICER PRESSURE.	1	8
- 20	96-970001-61	. TUBE ASSY,LH.	1	3
	96-970001-151	. TUBE ASSY,LH.	1	4
	96-970001-21	. TUBE ASSY,RH.	1	3
	96-970001-157	. TUBE ASSY,RH.	1	4
- 21	95-970000-149	. HOSE.	2	9
- 22	23S2004-14-1	. BOOT,DEICER/LH WING/.	1	9
	23S2004-14-2	. BOOT,DEICER/RH WING/.	1	9
- 23	96-970001-77	. VALVE,RELIEF.	2	9
	96-970001-45	. TUBE,LH VENT.	1	1
	96-970001-89	. TUBE ASSY,LH VENT	1	2
- 24	96-970001-143	. TUBE ASSY,LH VENT	1	4
	96-970001-95	. TUBE ASSY,LH VENT/TO AUTOPILOT VALVE/	1	11
	1062004-8	. HOSE,LH VENT TUBE	1	11
	96-970001-85	. BUSHING,LH VENT TUBE.	1	11
	96-970001-137	. TUBE,FILTER VENT/LH/.	1	9
	96-970001-133	. TUBE,FILTER VENT/RH/.	1	9
- 25	106200H-4-12	. HOSE,CONNECTING	6	9
	96-970001-141	. TUBE,FILTER VENT/LH/.	1	11
	96-970001-119	. TUBE ASSY,LH/DISTRIBUTOR VALVE TO FILTER/	1	9
	96-970001-117	. TUBE ASSY,RH/DISTRIBUTOR VALVE TO FILTER/	1	9
	96-970001-115	. TUBE ASSY,LH/DISTRIBUTOR VALVE TO FILTER/	1	11
- 26	96-970001-41	. TUBE,OVERBOARD VENT	1	9

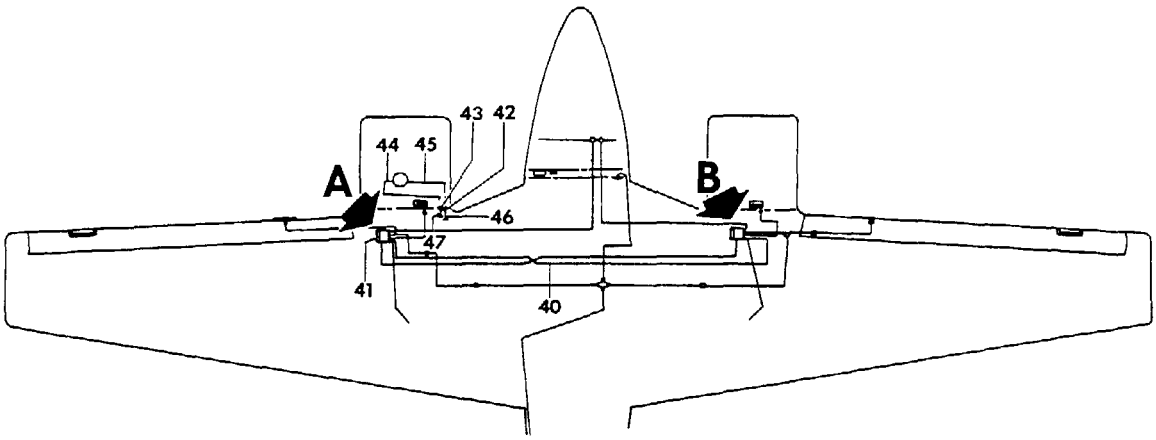

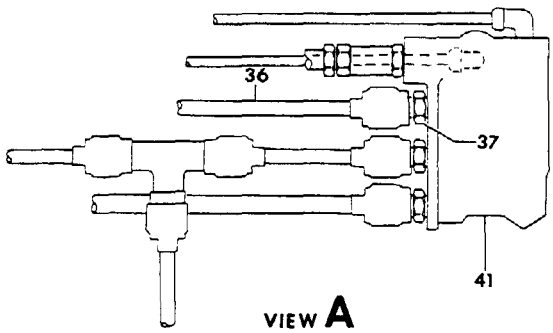

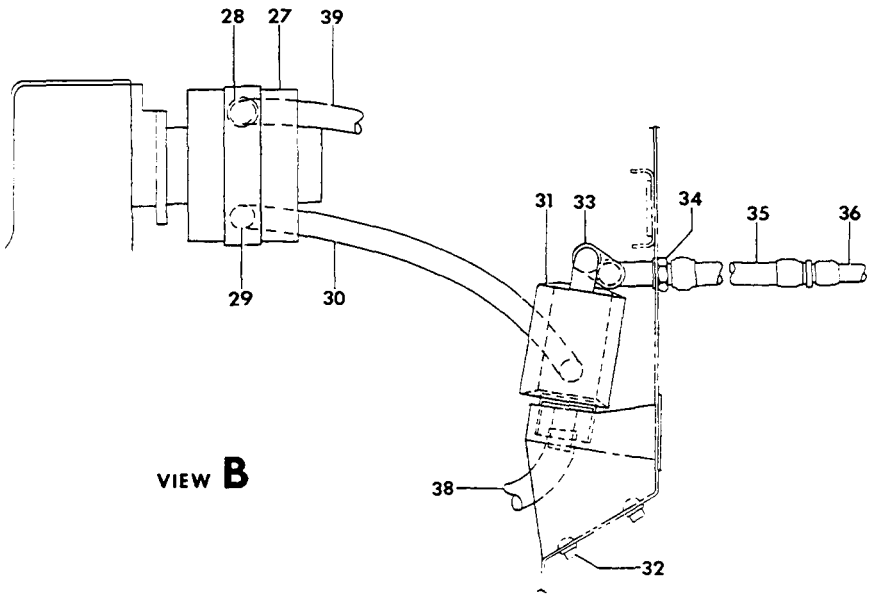

B55-193-32

FIGURE 10-10. SURFACE DEICER
/SHEET 2 OF 3 SHEETS/

ATA CODE & INDEX NO.	PART NO.	DESCRIPTION 1 2 3 4 5 6 7	UNITS PER ASSY	USABLE ON CODE
10-10 - 27	50-380090	PUMP,VACUUM/ALTERNATE FOR 50-380090-1/	2	9
	50-380090-1	PUMP,VACUUM/ALTERNATE FOR 50-380080/	2	9
- 28	AN816-10	NIPPLE/LH ONLY/	1	9
	MS20822-8	ELBOW/RH ONLY/	1	9
- 29	AN844-10	ELBOW	2	9
- 30	106200-10-84	HOSE	2	9
- 31	96-500020-23	SEPARATOR,AIR-OIL	2	9
		/ATTACHING PARTS/		
- 32	AN515-8R	SCREW	2	
		——*——		
- 33	106200FR10-16	HOSE	2	9
- 34	AN838-10	ELBOW	2	9
	AN924-10D	NUT	2	9
	AN960-1016	WASHER	2	9
- 35	96-970001-49	TUBE	2	3
- 36	96-970001-31	TUBE,LH	1	3
	96-970001-135	TUBE,LH	1	4
	96-970001-27	TUBE,RH	1	3
	96-970001-131	TUBE,RH	1	4
- 37	AN815-8D	UNION	2	9
- 38	106200FR4-106	TUBE	2	9
- 39	MS28741-10-0201	HOSE ASSY,LH	1	9
	MS28741-10-0325	HOSE ASSY,RH	1	9
- 40	96-970001-35	TUBE/DISTRIBUTION VALVE INTERCONNECT/	2	9
- 41	232811-3	VALVE ASSY,DISTRIBUTION CONTROL	2	9
		/ATTACHING PARTS/		
	AN3A	BOLT	3	
		——*——		
- 42	AN822-10	ELBOW	1	9
	AN924-4	NUT	2	9
- 43	AN837-6	ELBOW	2	9
	AN924-6	NUT	2	9
	96-970001-37	BRACKET,VALVE ASSY MTG/LH/	1	9
	96-970001-39	BRACKET,VALVE ASSY MTG/RH/	1	9
	96-970001-55	SPACER,BRACKET	2	9
- 44	MS28741-6-0110	HOSE ASSY,FUEL/3/8 OD/	2	3
	MS28741-8-0110	HOSE ASSY,FUEL/1/2 OD/	2	4
- 45	MS28741-4-0250	HOSE ASSY,FUEL	2	9
- 46	96-970001-67	TUBE ASSY,FUEL/1/4 OD/LH/	1	5
	96-970001-71	TUBE ASSY,FUEL/1/4 OD/RH/	1	9
- 47	96-970001-69	TUBE ASSY,FUEL/3/8 OD/LH/	1	3
	96-970001-159	TUBE ASSY,FUEL/1/2 OD/LH/	1	4
	96-970001-73	TUBE ASSY,FUEL/3/8 OD/RH/	1	3
	96-970001-161	TUBE ASSY,FUEL/1/2 OD/RH/	1	4

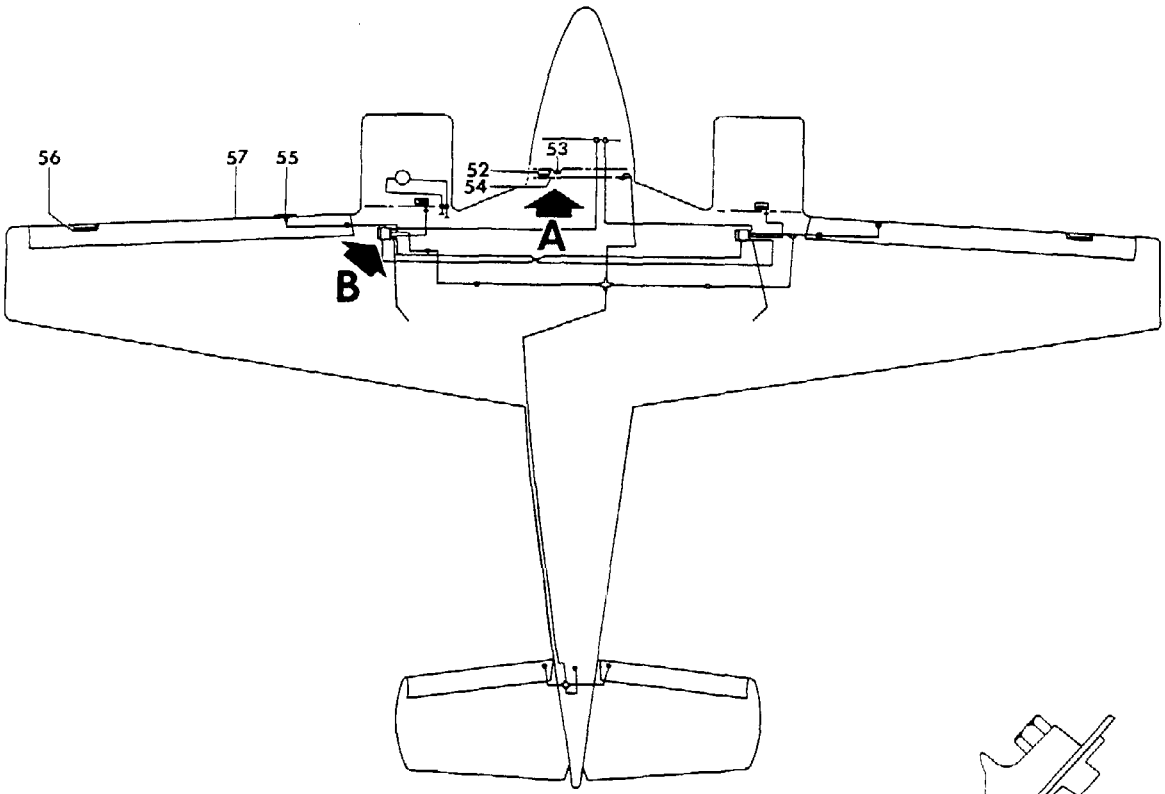

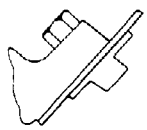

VIEW B

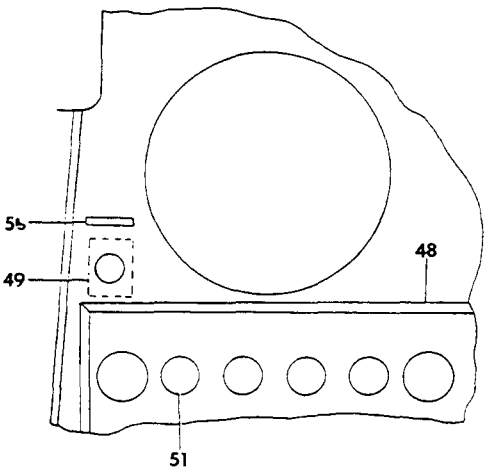

VIEW A

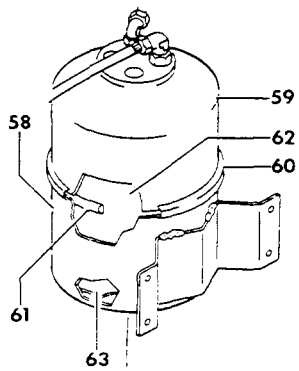

VIEW B

B55-193-33

FIGURE 10-10.SURFACE DEICER
/SHEET 3 OF 3 SHEETS/

ATA CODE & INDEX NO.	PART NO.	DESCRIPTION 1 2 3 4 5 6 7	UNITS PER ASSY	USABLE ON CODE
10-10 - 48	96-324034-11	. PANEL,SWITCH/USE WITH GENERATORS/	1	9
	96-324062-1	. PANEL,SWITCH/USE WITH ALTERNATORS/.	1	5
	96-324062-3	. PANEL,SWITCH/USE WITH ALTERNATORS/.	1	6
- 49	D7274-2-5	. BREAKER,CIRCUIT	1	9
- 50	96-970012	. PLACARD,SURFACE DEICER.	1	9
- 51	MS35058-27	. SWITCH.	1	9
- 52	50-380048-1	. RELAY	1	9
		/ATTACHING PARTS/		
	AN960-6L	. WASHER.	2	
	AN515-6-4	. SCREW	2	
		——*——		
- 53	GT4738	. RELAY	1	9
		/ATTACHING PARTS/		
	AN515-4-4	. SCREW	2	
	AN960-4L	. WASHER.	2	
	MS20365-440	. NUT	2	
		——*——		
- 54	96-970001-51	. BRACKET	1	9
- 55	168-3	. DETECTOR UNIT,STALL WARNING	1	9
		/ATTACHING PARTS/		
	AN507-632-20	. SCREW	1	
	AN507-632-8	. SCREW	3	
		——*——		
- 56	95-970000-179	. RETAINER,LH LANDING LIGHT	1	9
	95-970000-180	. RETAINER,RH LANDING LIGHT	1	9
- 57	95-970000-107	. STRIP,STALL WARNING	1	9
	96-500022-31	. FILTER ASSY,AUTOPILOT	1	10
		/ATTACHING PARTS/		
	AN525-10R	. SCREW	4	
		——*——		
- 58	96-500022-35	. . HOUSING,FILTER.	1	10
- 59	96-500022-15	. . HOUSING,FILTER.	1	10
- 60	EX811-61-1	. . CLAMP	1	10
- 61	37278349	. . O RING.	1	10
- 62	200661	. . FILTER.	1	10
- 63	96-500022-21	. . BAFFLE.	1	10

CODES OF EFFECTIVITY

1	TC-483 THRU TC-779	2	TC-780 THRU TC-869
3	TC-483 THRU TC-869	4	TC-870 THRU TC-954
5	TC-483 THRU TC-954	6	TC-955 THRU TC-1402
7	TC-483 THRU TC-875	8	TC-876 THRU TC-1402
9	TC-483 THRU TC-1402	10	TC-870 THRU TC-1402
11	TC-502 THRU TC-1402		

"END"

30-10-20
SURFACE DEICER/AUTOMATIC/
TC-502 THRU TC-1607
TE-1 THRU TE-451 AND TC-350

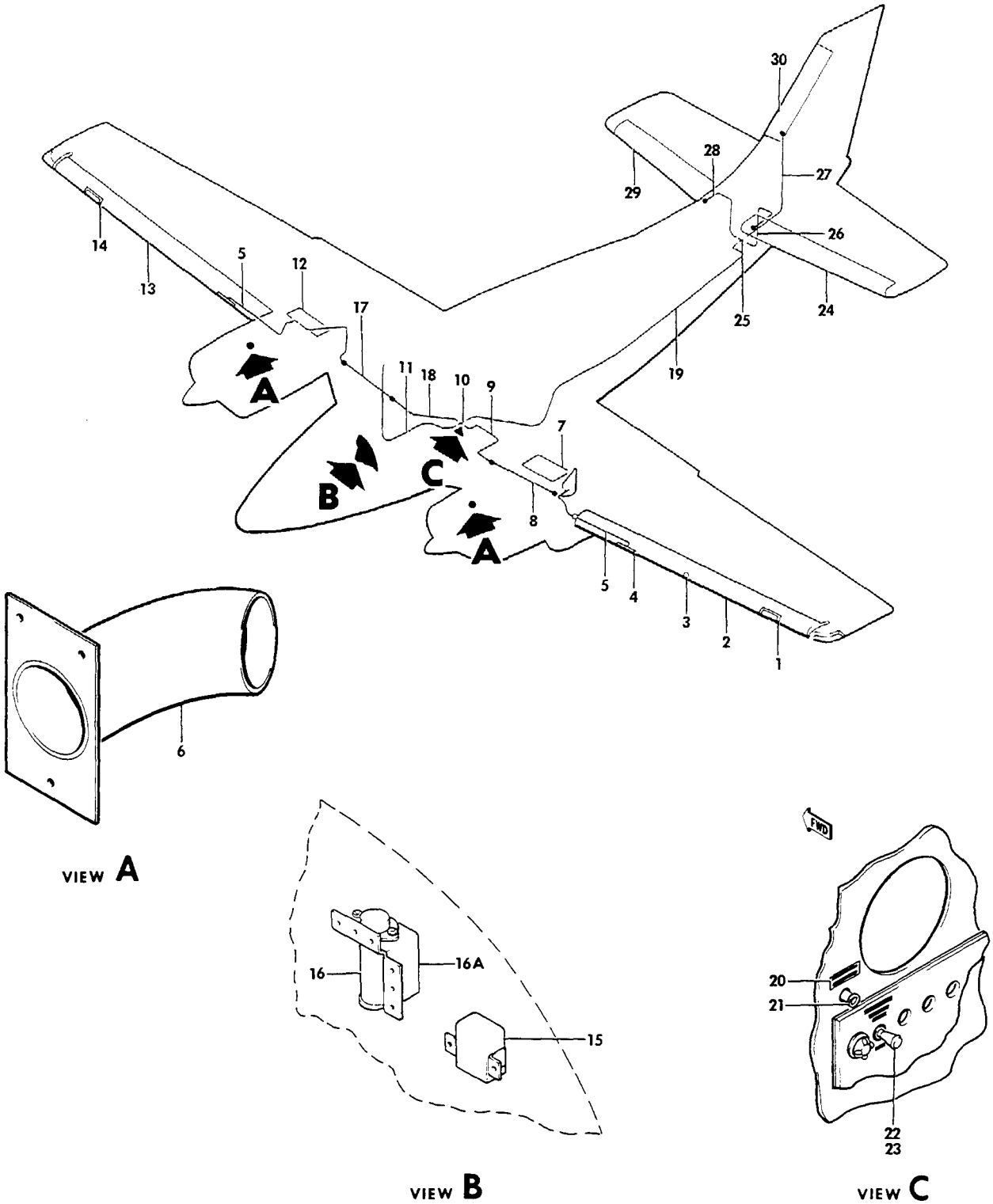

FIGURE 10-20.SURFACE DEICER
/SHEET 1 OF 3 SHEETS/

SUB-SECT UNIT & ITEM NO.		PART NO.	DESCRIPTION 1 2 3 4 5 6 7	UNITS PER ASSY	USABLE ON CODE
10-20		96-970002-9	DEICER INSTL,AUTOMATIC SURFACE.	NP	2
		96-970002-79	DEICER INSTL,AUTOMATIC SURFACE/WEDGE LIT/ . . .	NP	2
		96-970002-1	DEICER INSTL,AUTOMATIC SURFACE.	NP	3
	- 1	000-170032-1	. RETAINER,WING LANDING LIGHT LENS LH	1	1
	- 2	R 96-380045-1	. BOOT,WING DEICER LH	1	1
	- 3	58-361013-5	. DETECTOR,STALL WARNING.	1	1
	- 4	130411-00900	. STALL STRIP	1	1
	- 5	95-970000-195	. HOSE,DEICER/FROM BOOT TO VALVE/	1	1
			/ATTACHING PARTS/		
		AN737RM24	. CLAMP	1	
			----*----		
	- 6	96-970001-97	. TUBE ASSY,DEICER.	1	1
			/ATTACHING PARTS/		
		AN525-10R7	. SCREW	6	
		AN960-10	. WASHER.	6	
		MS20365-1032	. NUT	6	
			----*----		
	- 7	R 96-980002-15	. DOOR,LH NACELLE ACCESS.	1	1
	- 8	96-970001-195	. TUBE,NACELLE TO FUSELAGE LH	1	1
	- 9	95-970000-191	. HOSE,MANIFOLD TO NACELLE LH	1	1
			/ATTACHING PARTS/		
		AN737RM26	. CLAMP	1	
			----*----		
	- 10	AN918-2D	. MANIFOLD,DEICER FWD	1	1
	- 11	96-970001-47	. TUBE,DEICER/INSTRUMENT PANEL TO FWD MANIFOLD/	1	1
	- 12	R 96-980002-16	. DOOR,RH NACELLE ACCESS.	1	1
	- 13	R 96-380045-2	. BOOT,WING DEICER RH	1	1
	- 14	000-170032-2	. RETAINER/WING LANDING LIGHT LENS RH/.	1	1
	- 15	50-380048-1	. RELAY,DEICER.	1	1
			/ATTACHING PARTS/		
		AN515-6-4	. SCREW	2	
		AN960-6L	. WASHER.	2	
		AN366F632	. NUTPLATE.	2	
			----*----		
	- 16	GT4738	. RELAY,SURFACE DEICER.	1	1
	- 16A	96-970001-51	. BRACKET,RELAY	1	1
			/ATTACHING PARTS/		
		AN515-4-4	. SCREW	2	
		AN960-4L	. WASHER.	2	
		MS20365-440	. NUT	2	
			----*----		
	- 17	96-970001-196	. TUBE/NACELLE TO FUSELAGE RH/.	1	1
	- 18	95-970000-191	. HOSE/MANIFOLD TO NACELLE RH/.	1	1
			/ATTACHING PARTS/		
		AN737RM26	. CLAMP	1	
			----*----		
	- 19	96-970001-11	. TUBE,DEICER/FWD MANIFOLD TO AFT MANIFOLD/ . .	1	1
	- 20	96-970012	. PLACARD/SURFACE DEICER/	1	1
	- 21	D7274-2-5	. CIRCUIT BREAKER,SURFACE DEICER.	1	1
	- 22	35-380052	. KNOB,INSTRUMENT PANEL	1	1
	- 23	35-380053-5	. SWITCH/INSTRUMENT PANEL/.	1	1
	- 24	25S7D5057-03	. BOOT,HORZ STAB LH/SPARE REPL 23S2004-5-1/ . .	1	1
	- 25	AN918-2D	. MANIFOLD,DEICER AFT	1	1
		AN840-6D	. ADAPTER,AFT MANIFOLD.	2	1
		AN842-6D	. ELBOW,AFT MANIFOLD.	2	1
	- 26	96-970001-167	. TUBE,ELEVATOR BOOT LH	1	1
		23S2004-15-1	. BOOT,HORIZONTAL STAB LH	1	3
	- 27	96-970001-171	. TUBE,DEICER/VERTICAL STABILIZER/.	1	1
	- 28	96-970001-165	. TUBE,ELEVATOR BOOT RH	1	1
		MS3367-1-9	. STRAP,TUBE SUPPORT.	3	1
	- 29	25S7D5057-04	. BOOT,HORZ STAB RH/SPARE REPL 23S2004-5-2/ . .	1	1
		23S2004-15-2	. BOOT,HORIZONTAL STAB RH	1	3
	- 30	25S7D5057-09	. BOOT,VERTICAL STAB/SPARE REPL 23S2004-5-2/. .	1	1

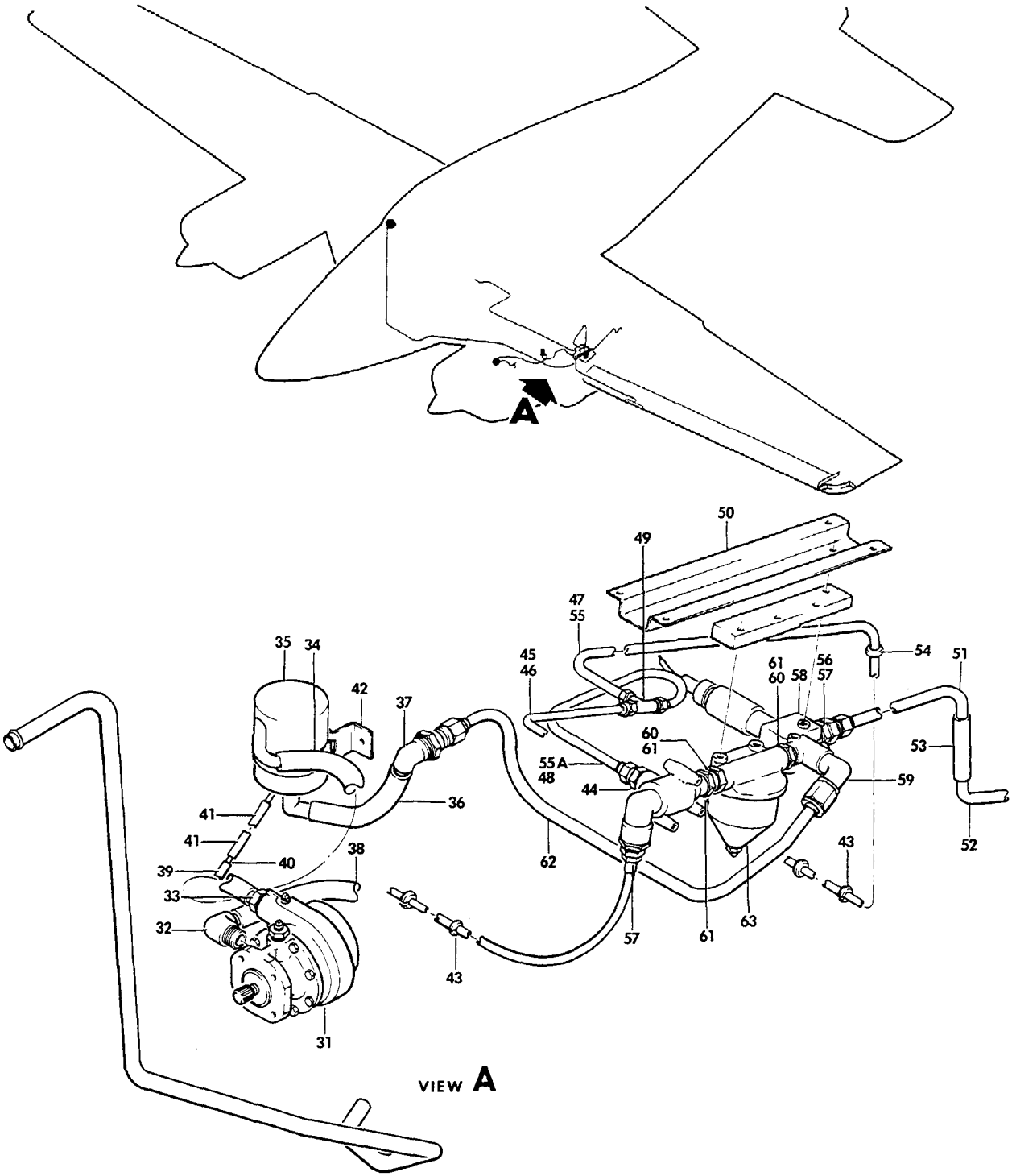

B55-193-23

FIGURE 10-20. SURFACE DEICER
/SHEET 2 OF 3 SHEETS/

SUB-SECT UNIT & ITEM NO.	PART NO.	DESCRIPTION 1 2 3 4 5 6 7	UNITS PER ASSY	USABLE ON CODE
10-20 - 31	50-380090	PUMP,DEICER VACUUM.	2	1
- 32	AN844-10	ELBOW	2	1
- 33	AN840-10	ADAPTER	2	1
- 34	106200FR10-48	HOSE/VACUUM PUMP TO SEPARATOR/.	2	1
- 35	96-380033-5	SEPARATOR,OIL	2	2
	96-380029-5	SEPARATOR,OIL	2	3
- 36	106200FR10-24	HOSE/OIL SEPARATOR TO FIREWALL/	2	1
- 37	AN838-10	ELBOW,BULKHEAD.	2	1
- 38	106200H10-84	HOSE/VACUUM PUMP TO FIREWALL/	2	1
- 39	96-970002-53	HOSE/OIL SEPARATOR DRAIN/	2	1
- 40	96-970002-73	TUBE/OIL SEPARATOR DRAIN/	2	1
- 41	96-970002-71	HOSE/OIL SEPARATOR DRAIN/	2	1
- 42	96-500028	BRACKET/OIL SEPARATOR MOUNTING/ /ATTACHING PARTS/	2	1
	AN737TW98	CLAMP	1	
	AN4-4A	BOLT.	2	
	AN960-416	WASHER.	2	
	MS20365-428	NUT	2	
- 43	115005-6	GROMMET	4	1
- 44	AN919-14D	REDUCER	2	1
- 45	96-970001-61	TUBE/FROM WING BOOT TO TEE LH/.	1	1
- 46	96-970002-41	TUBE/FROM VALVE TO TEE RH/.	1	1
- 47	96-970001-21	TUBE/FROM WING BOOT TO TEE RH/.	1	1
- 48	96-970002-39	TUBE/FROM SHUTTLE VALVE TO TEE LH/.	1	1
- 49	AN824-6D	TEE/BETWEEN SHUTTLE VALVE AND BOOT/	2	1
- 50	96-970002-45	BRACKET,FILTER.	1	1
- 51	96-970002-23	TUBE/CONTROL VALVE DRAIN LH/.	1	1
	96-970002-25	TUBE/CONTROL VALVE DRAIN RH/.	1	1
- 52	96-970001-41	TUBE/CONTROL VALVE DRAIN/	2	1
	MS35489-15	GROMMET,DRAIN	4	1
- 53	106200H8-12	HOSE,DRAIN.	2	1
- 54	MS35489-6	GROMMET	2	1
- 55	96-970001-33	TUBE/TEE TO 96-970001-53 TUBE ASSY LH/.	1	1
- 55A	96-970001-19	TUBE/TEE TO 95-970000-191 TUBE ASSY RH/	1	1
- 56	AN816-8D	NIPPLE,CONTROL VALVE.	2	1
- 57	AN912-4D	BUSHING,CONTROL VALVE	4	
- 58	R 3D1542-03	VALVE,DEICER CONTROL/ALT FOR AA684-02/.	2	1
	R AA684-02	VALVE,DEICER CONTROL/ALT FOR 3D1542-03/	2	1
- 59	MS20822-10D	ELBOW	2	1
- 60	AN924-10D	NUT/BETWEEN FILTER AND CONTROL VALVE/	4	1
- 61	AN6290-10	GASKET/BETWEEN FILTER AND CONTROL VALVE/.	4	1
- 62	96-970002-13	TUBE/CONTROL VALVE TO OIL SEPARATOR LH/	1	1
	96-970002-15	TUBE/CONTROL VALVE TO OIL SEPARATOR RH/	1	1
- 63	50-389083	FILTER ASSY,DEICER.	1	1

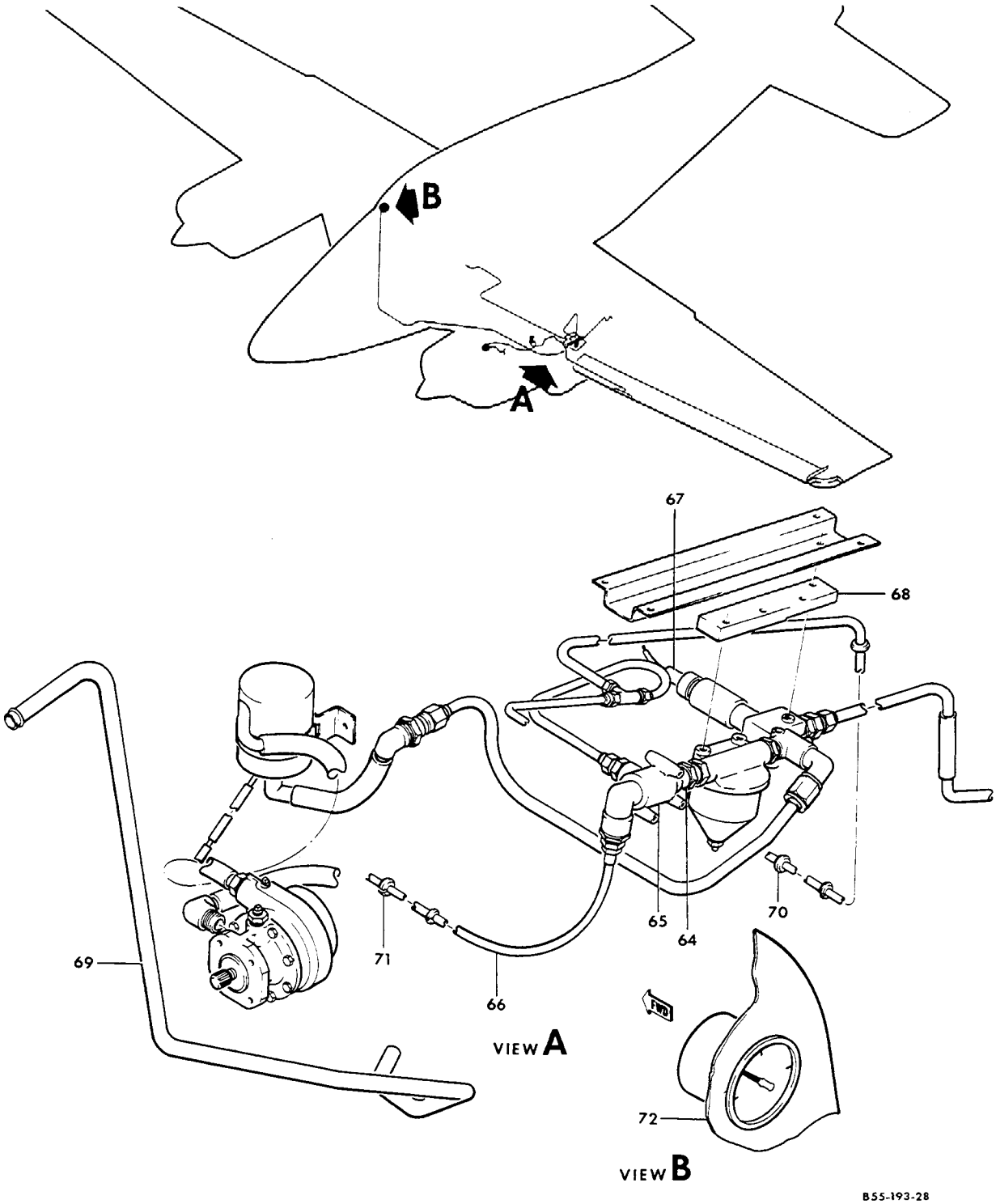

FIGURE 10-20. SURFACE DEICER
/SHEET 3 OF 3 SHEETS/

ATA CODE & INDEX NO.	PART NO.	DESCRIPTION 1 2 3 4 5 6 7	UNITS PER ASSY	USABLE ON CODE
10-20 - 64	AN832-10D	UNION/FROM SHUTTLE VALVE TO FILTER/	2	1
- 65	3D1549-0241	VALVE,SHUTTLE	2	1
	H674-02A1	VALVE,SHUTTLE	2	1
- 66	96-970001-63	TUBE/FROM SHUTTLE VALVE TO PRESSURE GAGE LH/	1	1
	96-970001-65	TUBE/FROM SHUTTLE VALVE TO PRESSURE GAGE RH/	1	1
- 67	MS316R12S3S	PLUG,CONTROL VALVE	2	1
- 68	96-970002-47	SPACER,FILTER	2	1
- 69	96-910045-9	TUBE,ENGINE BREATHER LH	1	1
	96-910045-11	TUBE,ENGINE BREATHER RH	1	1
- 70	MS35489-17	GROMMET/FUSELAGE STATION 85.25/	2	1
- 71	115005-1	GROMMET/FUSELAGE STATION 58.50/	2	1
- 72	50-380016-13	GAGE,SURFACE DEICER	1	1
	96-384061-1	GAGE,SURFACE DEICER/INTERNALLY LIT/	1	1
	58-380022-11	LIGHT TRAY ASSY	1	1

CODES OF EFFECTIVITY

1 TC-502 THRU TC-1607
TE-1 THRU TE-452
AND TC-350

2 TC-502 THRU TC-1607

3 TE-1 THRU TE-451
AND TC-350

"END"

30-10-30
SURFACE DEICER
TE-452 THRU TE-942 EXCEPT TE-938

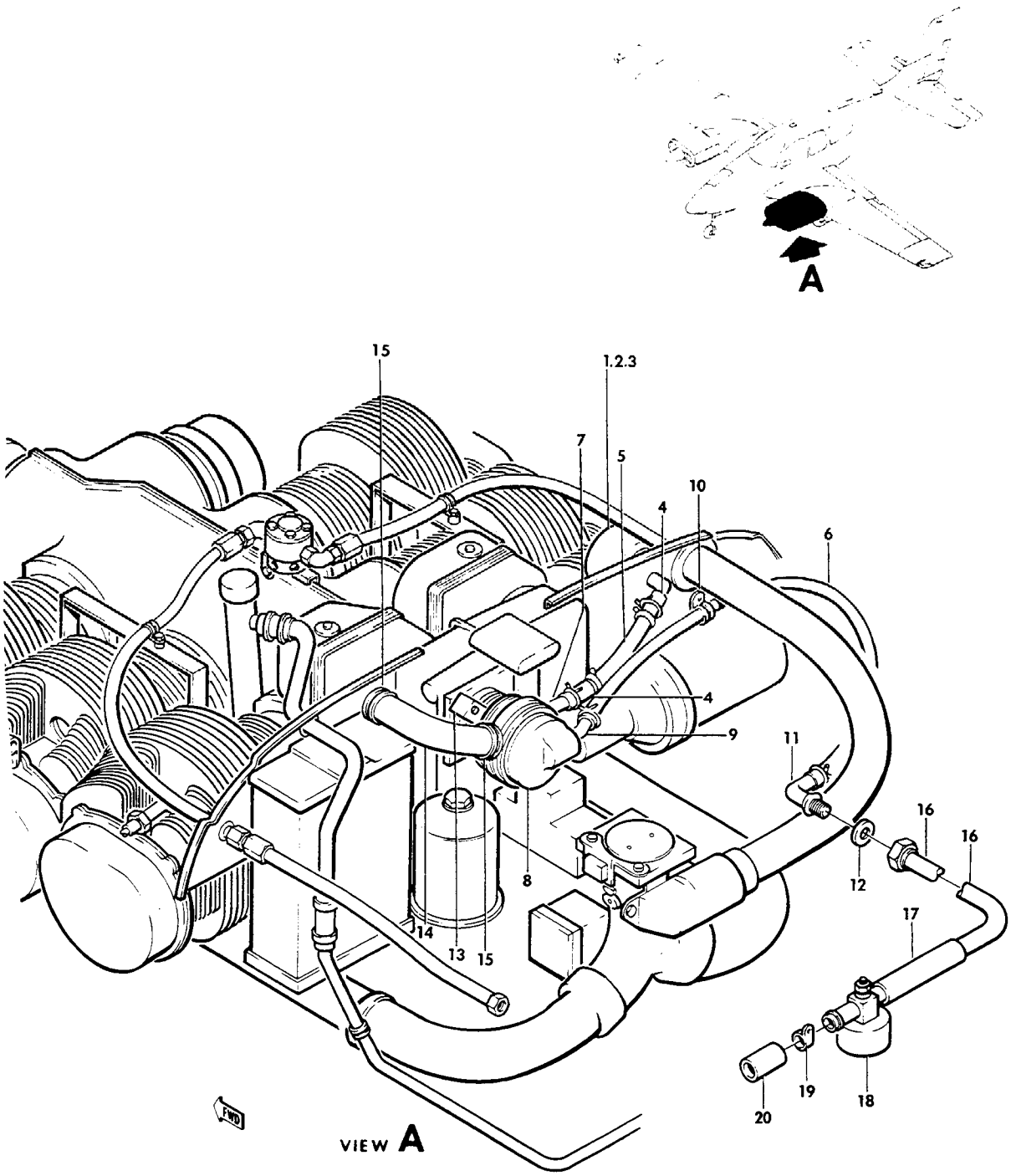

B55-193-14

FIGURE 10-30.SURFACE DEICER
/SHEET 1 OF 4 SHEETS/

ATA CODE & INDEX NO.	PART NO.	DESCRIPTION 1 2 3 4 5 6 7	UNITS PER ASSY	USABLE ON CODE
10-30	96-970004	DEICER INSTL,SURFACE.	NP	1
	96-970004-67	DEICER INSTL,SURFACE/WEDGE LIT/	NP	1
- 1	58-910021-1	. COVER,AIR FILTER.	1	1
- 2	1J2-5	. FILTER,PRESSURE PUMP.	1	1
- 3	D9-14-1	. ELEMENT,FILTER.	1	1
- 4	106200G12-10	. HOSE.	2	1
		/ATTACHING PARTS/		
	CS18A	. CLAMP	2	
- 5	96-910002-83	. TUBE/FILTER TO PRESSURE PUMP/	1	1
- 6	106200H12-132	. HOSE,PRESSURE PUMP/OUTLET TO FIREWALL/. . . .	1	1
		/ATTACHING PARTS/		
	CS-A13	. CLAMP	2	
- 7	1K10-8-12	. FITTING,PRESSURE PUMP/INLET/.	1	1
- 8	442CW12	. PUMP,PRESSURE	1	1
- 9	1K24-2	. FITTING,PRESSURE PUMP/OUTLET/	1	1
	A9-6-7	. O RING/FURNISHED WITH FITTING/.	1	1
- 10	MS21919DG12	. CLAMP	1	1
		/ATTACHING PARTS/		
	AN515-8R7	. SCREW	1	
	AN960-8	. WASHER.	1	
	MS20365-832	. NUT	1	
- 11	1K43-12-12	. FITTING,HOSE.	1	1
- 12	AN960-1716L	. WASHER.	2	1
	58-910024-1	. DUCT INSTL/PRESSURE PUMP COOLING/	NP	1
- 13	58-910024-9	. . BRACKET,DUCT SUPPORT.	1	1
	58-910024-3	. . TUBE.	2	1
- 14	BE350-1	. . DUCT/PRESSURE PUMP COOLING/	1	1
		/ATTACHING PARTS/		
	AN743-12	. . CLIP.	1	
	58-910024-7	. . CLIP.	1	
- 15	MS21919DG21	. . CLAMP	2	
	AN3-4A/M/	. . BOLT.	2	
	AN960-10L	. . WASHER.	2	
	MS20365-1032	. . NUT	2	
	96-321000-1	. INSTRUMENT AND PRESSURE PLUMBING INSTL. . . .	NP	1
		/NACELLE AND WING/		
- 16	96-321000-17	. . TUBE ASSY/LH NACELLE/	1	1
	96-321000-19	. . TUBE ASSY/RH NACELLE/	1	1
- 17	106200H12-18	. . HOSE.	2	1
		/ATTACHING PARTS/		
	AN737TW38	. . CLAMP,HOSE.	14	
- 18	2H22-11	. . VALVE,PRESSURE RELIEF	2	1
- 19	MS21919DG10	. . CLAMP,PRESSURE RELIEF VALVE ATTACHING . . .	2	1
		/ATTACHING PARTS/		
	AN3-6A/M/	. . BOLT.	2	
	100696D-ZL008	. . SPACER.	2	
	AN960-10	. . WASHER.	2	
	96-321000-41	. . BRACKET ASSY.	2	1
- 20	106200H10-5	. . HOSE.	2	1
		/ATTACHING PARTS/		
	AN737TW34	. . CLAMP	4	

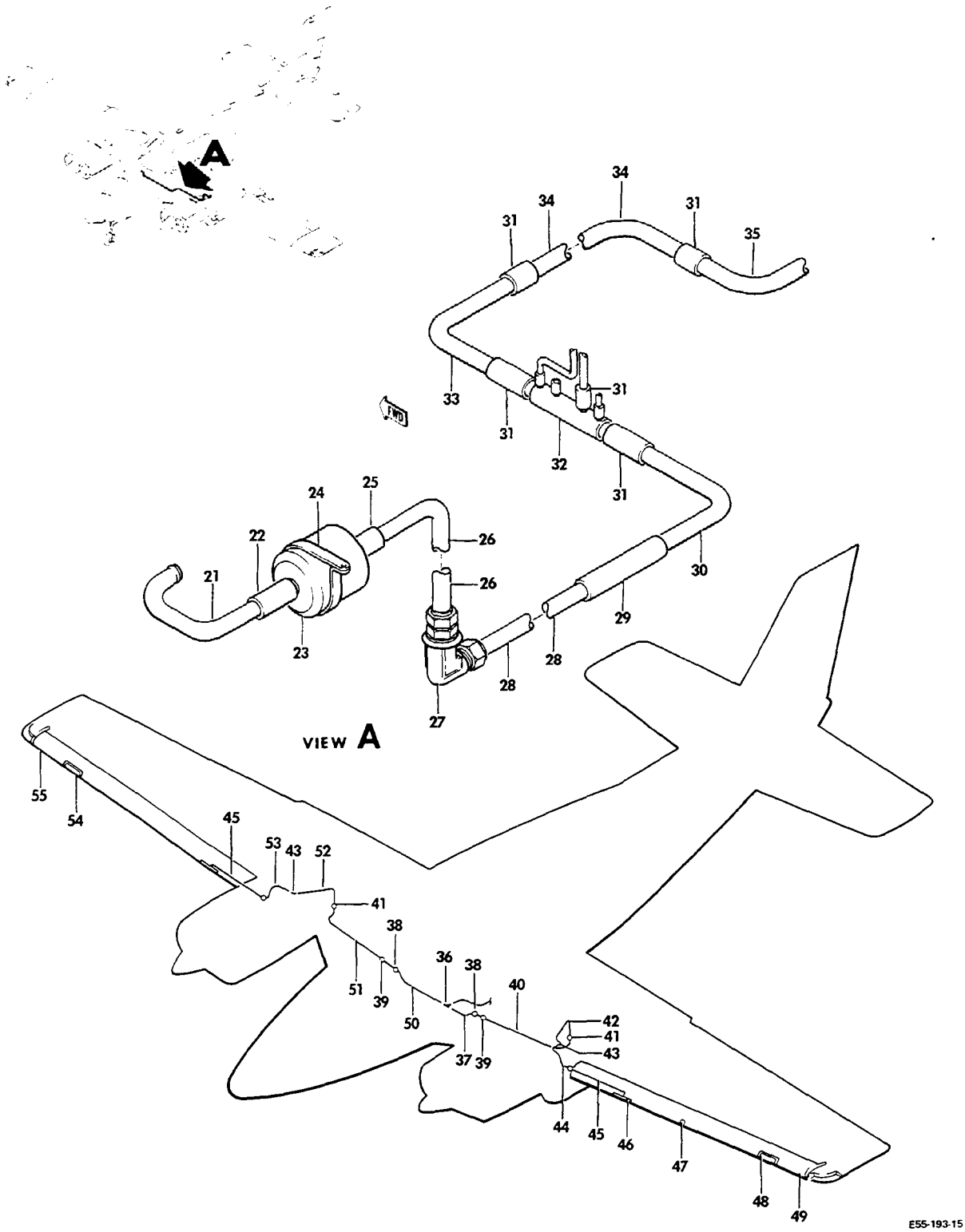

FIGURE 10-30.SURFACE DEICER
/SHEET 2 OF 4 SHEETS/

SUB-SECT UNIT & ITEM NO.	PART NO.	DESCRIPTION 1 2 3 4 5 6 7	UNITS PER ASSY	USABLE ON CODE
10-30 - 21	58-320000-3	. . TUBE.	2	1
- 22	106200H10-11	. . HOSE.	2	1
		/ATTACHING PARTS/		
	AN737TW34	. . CLAMP	4	
- 23	IJ4-7	. . FILTER,AIR.	2	1
- 24	MS21919DG50	. . CLAMP,AIR FILTER.	2	1
		/ATTACHING PARTS/		
	AN3-4A/M/	. . BOLT.	2	
	AN960-10	. . WASHER.	2	
	MS20365-1032	. . NUT	2	
- 25	96-321000-37	. . SPLICE.	2	1
		/ATTACHING PARTS/		
	A12	. . CLAMP	4	
- 26	96-321000-13	. . TUBE ASSY/LH NACELLE/	1	1
	96-321000-15	. . TUBE ASSY/RH NACELLE/	1	1
- 27	AN833-10D	. . ELBOW	2	1
		/ATTACHING PARTS/		
	AN960-1016	. . WASHER.	2	
	AN924-10D	. . NUT	2	
- 28	96-321000-9	. . TUBE ASSY/LH NACELLE/	1	1
	96-321000-11	. . TUBE ASSY/RH NACELLE/	1	1
- 29	96-321000-37	. . SPLICE.	2	1
		/ATTACHING PARTS/		
	A12	. . CLAMP	4	
	58-324021-1	. INSTRUMENT AND PRESSURE PLUMBING INSTL.	NP	1
		/FUSELAGE AND WING/		
- 30	96-324012-27	. . TUBE.	1	1
- 31	58-324021-55	. . TUBE.	5	1
		/ATTACHING PARTS/		
	A12	. . CLAMP	8	
	AN737TW26	. . CLAMP	2	
- 32	50-324473-31	. . MANIFOLD.	1	1
- 33	96-324012-39	. . TUBE.	1	1
- 34	96-324012-37	. . TUBE.	1	1
- 35	96-324012-29	. . TUBE.	1	1
- 36	96-970004-29	. TEE ASSY,DEICER/FROM VALVE TO WINGS/.	1	1
- 37	96-970004-11	. TUBE,DEICER/FROM TEE TO LH WING/.	1	1
- 38	MS35489-17	. GROMMET	2	1
- 39	MS35489-6	. GROMMET	2	1
- 40	96-970001-195	. TUBE,LH WING.	1	1
- 41	AN815-6D	. UNION	2	1
- 42	96-970001-33	. TUBE,LH WING.	1	1
- 43	AN821-6D	. ELBOW	2	1
- 44	96-970001-61	. TUBE,LH WING.	1	1
- 45	95-970000-195	. TUBE,WING/LH AND RH/.	2	1
		/ATTACHING PARTS/		
	AN737RM24	. CLAMP	2	1
- 46	130411-00900	. STRIP,LH WING STALL	1	1
	58-361013-5	. DETECTOR INSTL,WING STALL WARNING	NP	1
- 47	95-970000-133	. . DETECTOR,WING STALL WARNING	1	1
- 48	000-170032-1	. LENS ASSY,LH WING LANDING LIGHT	1	1
- 49	R 96-380045-1	. BOOT,LH WING.	1	1
- 50	96-970004-73	. TUBE ASSY/FROM TEE TO RH WING/.	1	1
- 51	96-970001-196	. TUBE,RH WING.	1	1
- 52	96-970001-19	. TUBE,RH WING.	1	1
- 53	96-970001-21	. TUBE,RH WING.	1	1
- 54	000-170032-2	. LENS ASSY,RH WING LANDING LIGHT	1	1
- 55	R 96-380045-2	. BOOT,RH WING.	1	1

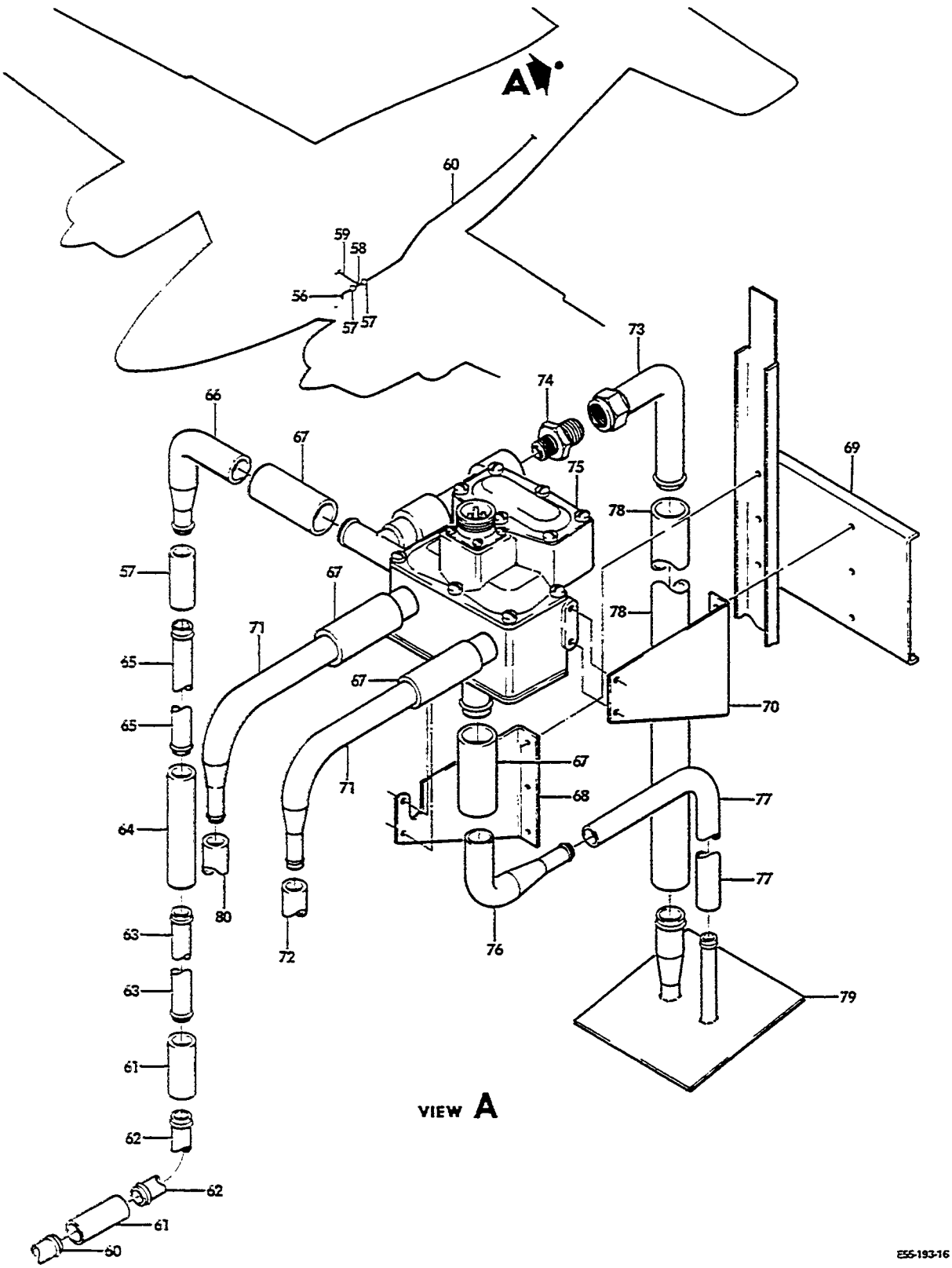

FIGURE 10-30. SURFACE DEICER
/SHEET 3 OF 4 SHEETS/

ATA CODE & INDEX NO.	PART NO.	DESCRIPTION 1 2 3 4 5 6 7	UNITS PER ASSY	USABLE ON CODE
10-30 - 56	96-970004-77	TUBE/FROM MANIFOLD TO TEE/	1	1
- 57	106200H10-8	HOSE	3	1
		/ATTACHING PARTS/		
	AN737TW38	CLAMP	2	
- 58	96-970004-5	TEE ASSY	1	1
- 59	96-970004-33	TUBE/FROM TEE TO DEICE PRESS GAGE/	1	1
- 60	96-970004-17	TUBE/FROM TEE TO DISTRIBUTION VALVE/	1	1
- 61	106200H10-12	HOSE	2	1
- 62	96-970004-41	TUBE	1	1
- 63	96-970004-39	TUBE	1	1
- 64	106200H10-24	HOSE	1	1
- 65	96-970005-11	TUBE/TO VALVE/	1	1
- 66	96-970004-7	ELBOW/FROM VALVE TO FWD MANIFOLD/	1	1
- 67	106200H12-8	HOSE	4	1
		/ATTACHING PARTS/		
	AN737RM38	CLAMP	2	1
- 68	96-970005-10	BRACKET,VALVE RH	1	1
- 69	96-970005-5	CHANNEL	2	1
- 70	96-970005-9	BRACKET,VALVE LH	1	1
- 71	96-970004-79	ELBOW,REDUCING	2	1
		/ATTACHING PARTS/		
	AN737RM24	CLAMP	2	
- 72	96-970005-13	TUBE/FROM VALVE TO AFT MANIFOLD/	1	1
- 73	96-970005-29	TUBE ASSY,DEICE	1	1
- 74	AN919-19D	REDUCER	1	1
	MS28778-8	O RING	1	1
- 75	38E63-1A	VALVE,DISTRIBUTION	1	1
		/ATTACHING PARTS/		
	501A10-6	SCREW	4	
	MS3106-14S7S	CONNECTOR,DEICE VALVE ELECTRICAL	1	1
- 76	96-970005-31	ELBOW,REDUCER	1	1
		/ATTACHING PARTS/		
	AN737RM22	CLAMP	2	
- 77	106200H8-104	HOSE,DRAIN	1	1
- 78	106200H12-96	HOSE,DRAIN	1	1
		/ATTACHING PARTS/		
	AN737RM34	CLAMP	2	
- 79	96-970005-21	WELD ASSY,DEICE	1	1
- 80	96-970005-15	TUBE,DEICER/FROM VALVE TO WING DEICE/	1	1

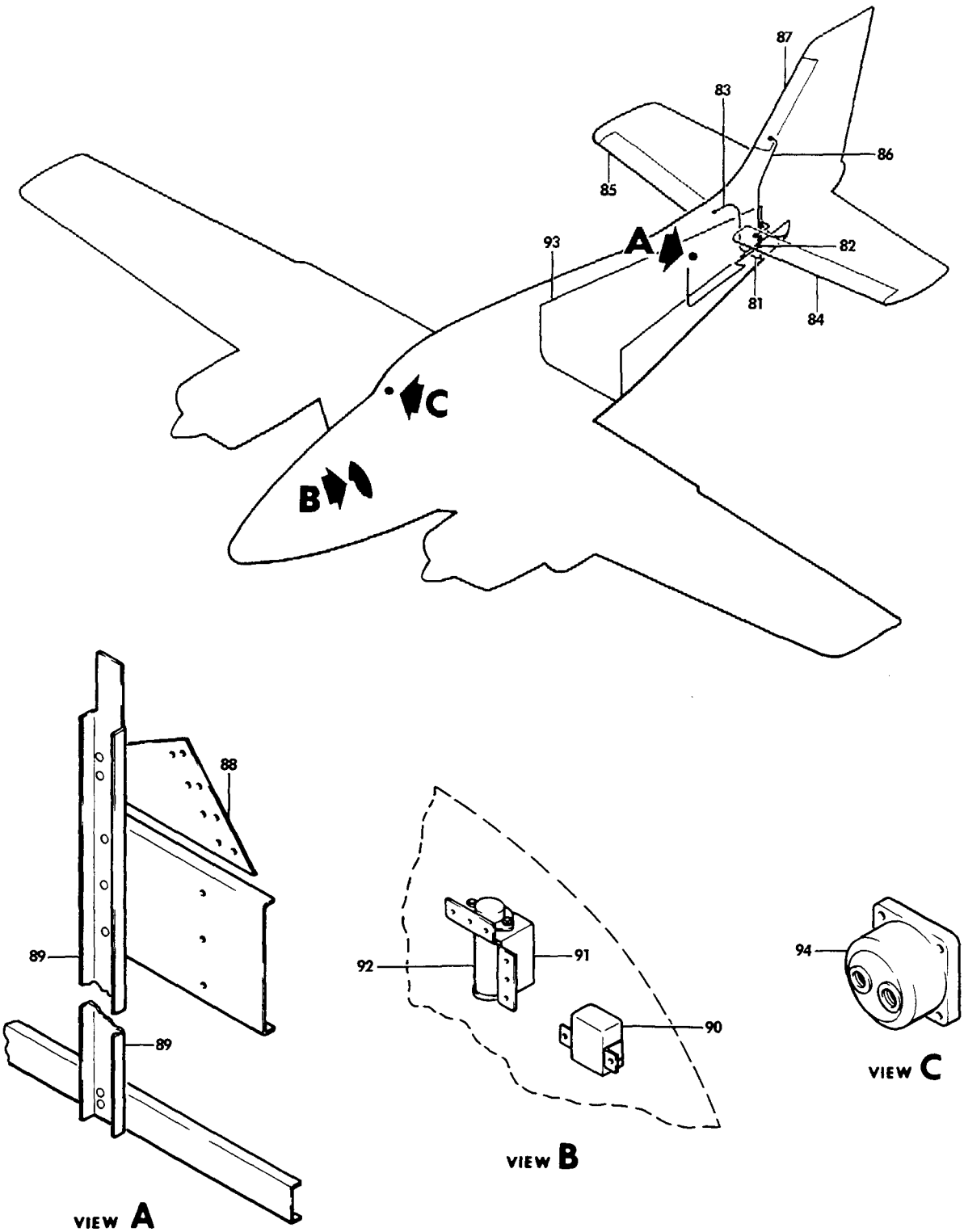

FIGURE 10-30.SURFACE DEICER
/SHEET 4 OF 4 SHEETS/

ATA CODE & INDEX NO.	PART NO.	DESCRIPTION 1 2 3 4 5 6 7	UNITS PER ASSY	USABLE ON CODE
10-30 - 81	50-970101-91	MANIFOLD,AFT.	1	1
		/ATTACHING PARTS/		
	AN737RM26	CLAMP	4	
- 82	96-970001-167	TUBE,LH HORIZONTAL STABILIZER BOOT.	1	1
- 83	96-970001-165	TUBE,RH HORIZONTAL STABILIZER BOOT.	1	1
		/ATTACHING PARTS/		
	MS3367-1-9	STRAP,TIE DOWN.	2	
- 84	23S2004-15-1	BOOT,HORIZONTAL STABILIZER LH	1	1
- 85	23S2004-15-2	BOOT,HORIZONTAL STABILIZER LH	1	1
- 86	96-970001-171	TUBE,VERTICAL STABILIZER BOOT	1	1
		/ATTACHING PARTS/		
	MS3367-1-9	CLAMP	1	
- 87	25S7D5057-09	BOOT,VERTICAL STABILIZER.	1	1
- 88	96-970005-19	GUSSET/STA 270/	1	1
- 89	96-970005-7	CHANNEL/STA 270/.	1	1
- 90	50-380048-1	RELAY,DEICER.	1	1
		/ATTACHING PARTS/		
	AN366F632	NUTPLATE.	2	
	AN960-6L	WASHER.	2	
	AN515-6-4	SCREW	2	
- 91	96-970001-51	BRACKET,DEICER RELAY.	1	1
- 92	GT4738	RELAY,DEICER.	1	1
- 93	96-970004-71	SKIN.	1	1
- 94	50-380016-13	INDICATOR,PRESSURE SYSTEM/POST LIGHT/	1	1
	96-384061-1	INDICATOR,PRESSURE SYSTEM/WEDGE TYPE LIT/	1	1
	7277-2-5	CIRCUIT BREAKER,DEICE	1	1
	35-380053-25	SWITCH,DEICER	1	1
	58-380022-11	TRAY ASSY,WEDGE LIGHT	1	1
		/ATTACHING PARTS/		
	MS35198-11	SCREW	1	
	MS35198-12	SCREW	1	

CODES OF EFFECTIVITY

1 TE-452 THRU TE-942
EXCEPT TE-938

"END"

30-30-01
HEATED PITOT

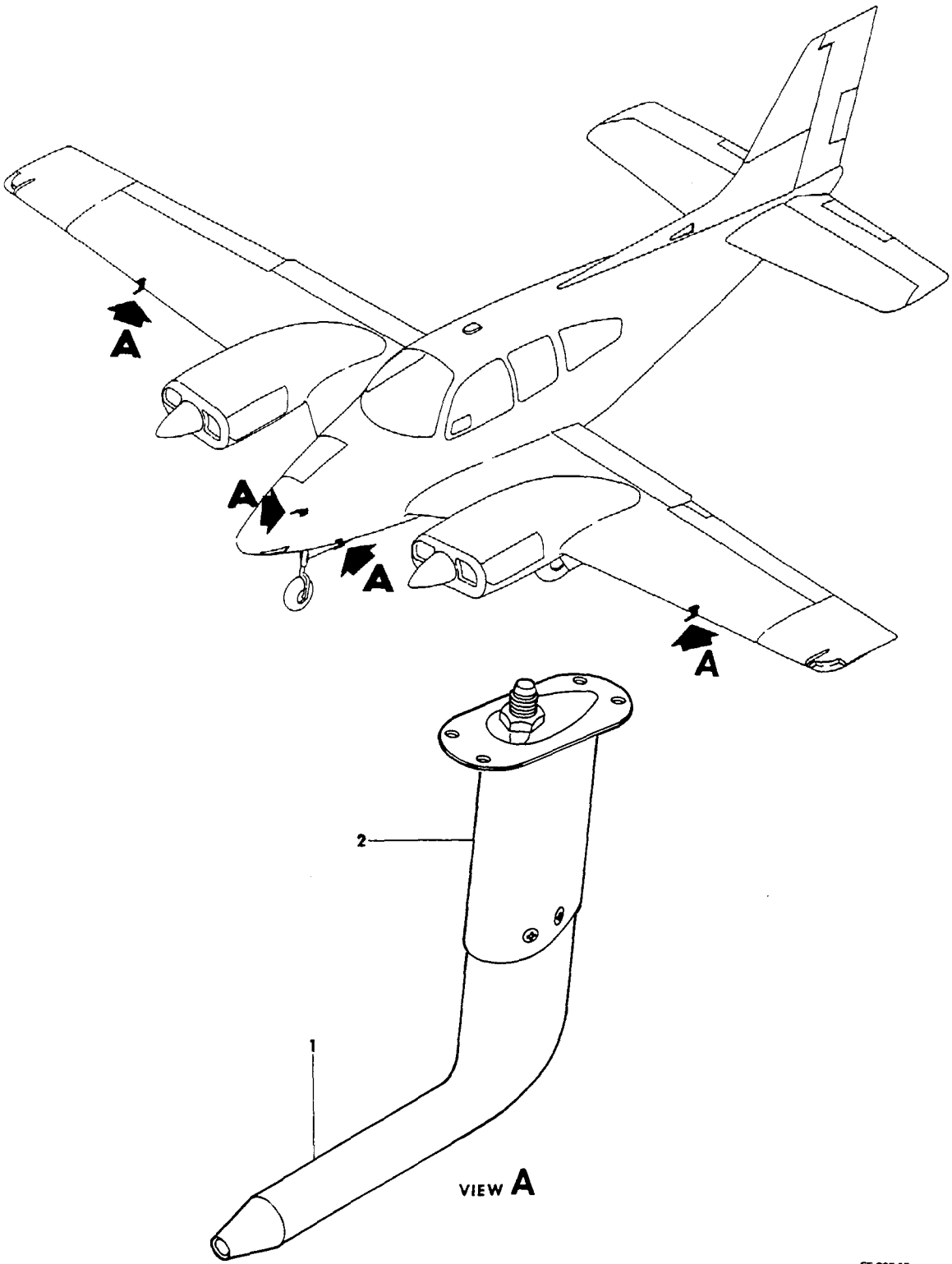

FIGURE 30-01.HEATED PITOT

ATA CODE & INDEX NO.	PART NO.	DESCRIPTION 1 2 3 4 5 6 7	UNITS PER ASSY	USABLE ON CODE
30-01 - 1	50-384040	TUBE ASSY,HEATED PITOT/LH & RH/ . . . . . /ATTACHING PARTS/	AR	
	AN507-640R4	SCREW	4	
- 2	95-324018-151	MAST ASSY,HEATED PITOT TUBE/STD SINGLE LH/. . .	1	
	95-324076-21	MAST ASSY,HEATED PITOT TUBE/OPT DUAL RH/. . . . /ATTACHING PARTS/	1	
	AN515-8R8	SCREW	4	
	113-205-102	CIRCUIT BREAKER	1	

NOTE SEE CHAPTER 34-10-01 FOR PITOT & STATIC PLUMBING INSTALLATION.

"END"

30-40-01
WINDSHIELD ANTI-ICE

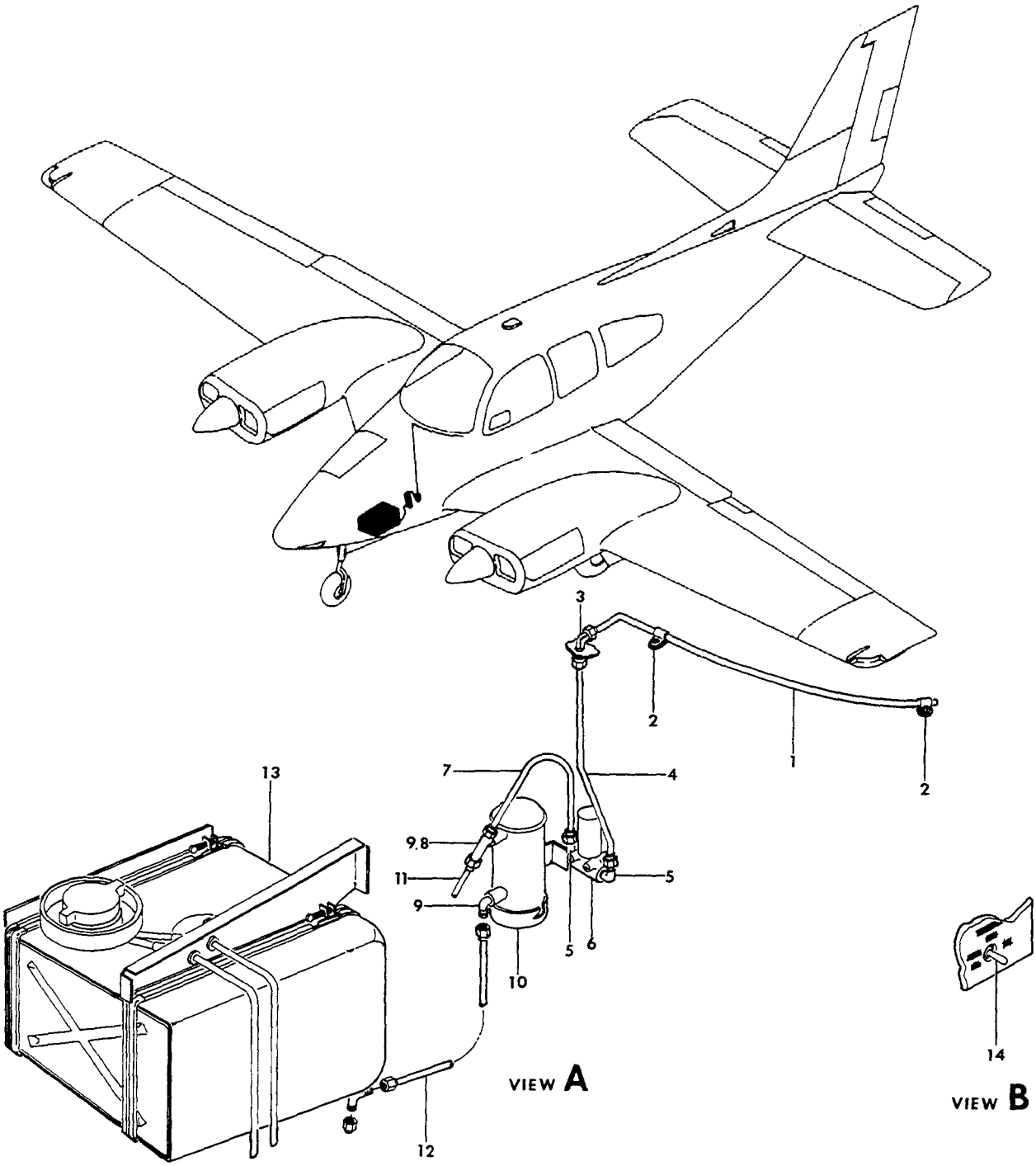

FIGURE 40-01.WINDSHIELD ANTI-ICE

ATA CODE & INDEX NO.	PART NO.	DESCRIPTION 1 2 3 4 5 6 7	UNITS PER ASSY	USABLE ON CODE
40-01	58-970000	WINDSHIELD ALCOHOL ANTI-ICE INSTALLATION. . . .	NP	1
	58-970000-3	WINDSHIELD ALCOHOL ANTI-ICE INSTALLATION. . . .	NP	2
		/ABOVE INSTALLATIONS USED WITH PROPELLER ANTI-ICE./		
		NOTE FOR COMPLETE ASSY BREAKDOWN AND BALANCE		
	58-970000-25	WINDSHIELD ALCOHOL ANTI-ICE INSTALLATION. . . .	NP	1
	58-970000-29	WINDSHIELD ALCOHOL ANTI-ICE INSTALLATION. . . .	NP	2
		/ABOVE INSTALLATIONS USED WITHOUT PROPELLER ANTI-ICE./		
- 1	58-970000-15	. TUBE ASSY	1	
- 2	AN742-4D	. CLAMP	2	
		/ATTACHING PARTS/		
	MS35206-230	. SCREW	2	
	AN960-6	. WASHER.	2	
	MS21043-06	. NUT	2	
- 3	AN833-4D	. ELBOW	1	
		/ATTACHING PARTS/		
	AN960-716	. WASHER.	1	
	AN924-4D	. NUT	1	
- 4	58-970000-55	. TUBE ASSY/USED WITH PROP ANTI-ICE INSTL/. . .	1	
	58-970000-57	. TUBE ASSY/USED W/O PROP ANTI-ICE INSTL/ . . .	1	
	MS35490-8	. GROMMET/NOSE BAGGAGE FLOOR/	1	
- 5	AN822-4D	. ELBOW/USED WITH PROP ANTI-ICE INSTL/.	2	
- 6	58-380086-1	. VALVE/USED WITH PROP ANTI-ICE INSTL/.	1	
- 7	58-970000-11	. TUBE ASSY/USED WITH PROP ANTI-ICE INSTL/. . .	1	
- 8	AN825-4D	. TEE/USED WITH PROP ANTI-ICE INSTL/.	1	
- 9	AN822-4D	. ELBOW/1 ONLY REQD WITH PROPELLER ANTI-ICE/. .	2	
	96-960006-55	. TANK INSTL,ALCOHOL.	NP	1
	96-960008-85	. TANK INSTL,ALCOHOL.	NP	2
- 10	476284	. . DUMP,ALCOHOL ANTI-ICE	1	
- 11	95-960007-29	. . TUBE ASSY/TO PROPELLER/	1	
- 12	95-960007-27	. . TUBE ASSY/TO ALCOHOL TANK/.	1	
	95-960007-3	. . TUBE ASSY/TO ALCOHOL TANK/.	1	2
- 13	95-960007-602	. . TANK ASSY,ANTI-ICE ALCOHOL.	1	3
	95-960008-605	. . TANK ASSY,ANTI-ICE ALCOHOL.	1	4
		NOTE FOR ALCOHOL ANTI-ICE PARTS NOT LISTED IN THIS CHAPTER,SEE CHAPTER 30-60-01.		
- 14	35-380053-11	. SWITCH,C/B/WITH PROP ANTI-ICE/.	1	1
	35-380052	. KNOB,C/B SW/WITH PROP ANTI-ICE/	1	1
	58-970000-19	. SWITCH ASSY,C/B/WITH PROP ANTI-ICE/	1	2
	113-205-102	. SWITCH,C/B/WITHOUT PROP ANTI-ICE/	1	1
	35-380132-1	. SWITCH,C/B/WITHOUT PROP ANTI-ICE/	1	2

CODES OF EFFECTIVITY

1	TC-1 THRU TC-1607	2	TE-1 THRU TE-942 EXCEPT TE-938
3	TC-1 THRU TC-1298, TC-1329 THRU TC-1359 TE-1 THRU TE-767	4	TC-1299 THRU TC-1328 TC-1360 THRU TC-1607 TE-768 THRU TE-942 EXCEPT TE-938

"END"

30-40-10
WINDSHIELD DEFROST

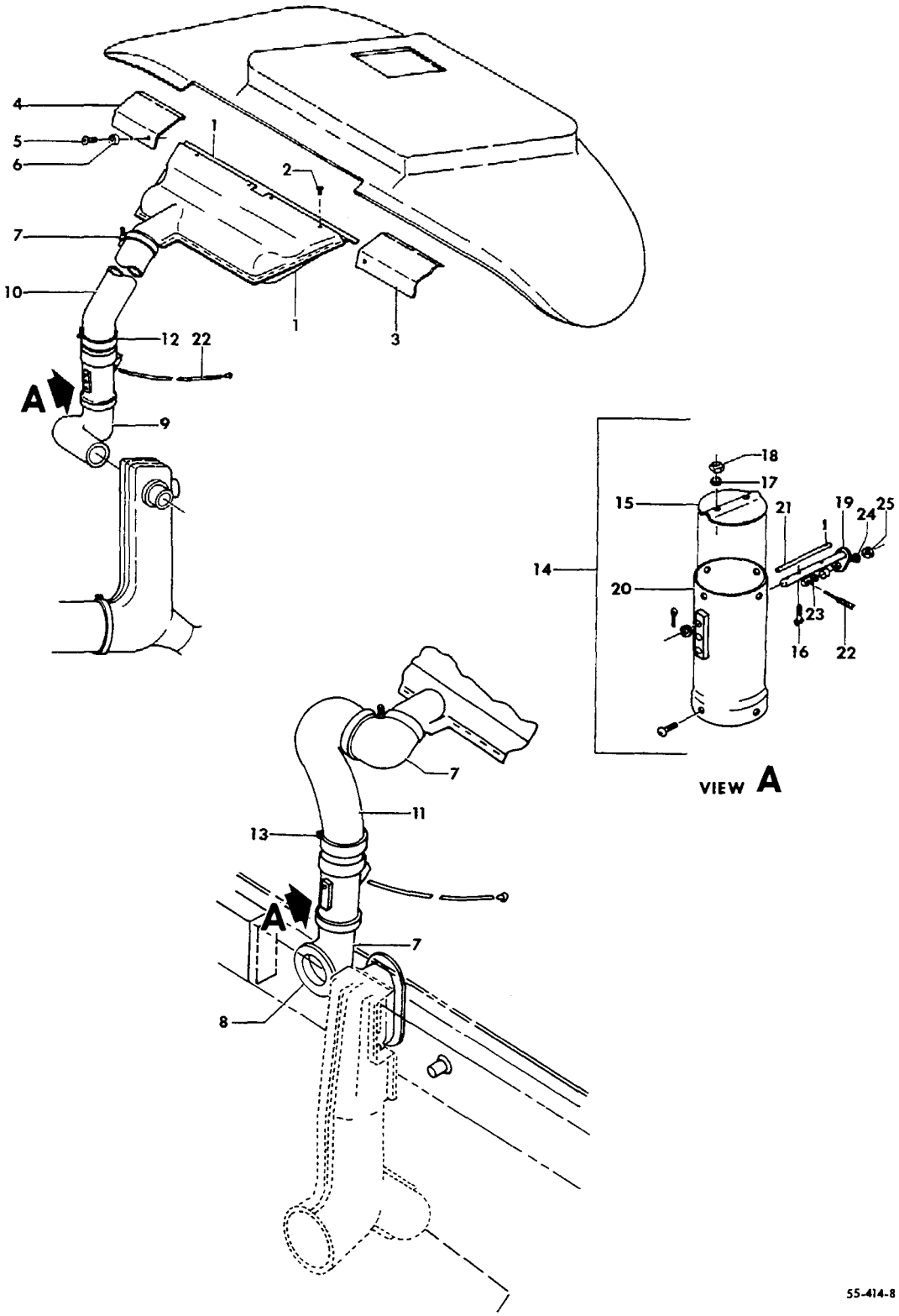

FIGURE 40-10.WINDSHIELD DEFROST

ATA CODE & INDEX NO.	PART NO.	DESCRIPTION 1 2 3 4 5 6 7	UNITS PER ASSY	USABLE ON CODE
40-10	95-550001-23	HEAT AND VENT INSTL	NP	1
	95-550002-1	HEAT AND VENT INSTL	NP	2
	95-550002-221	HEAT AND VENT INSTL	NP	3
	95-550002-199	HEAT AND VENT INSTL	NP	4
	95-550002-212	HEAT AND VENT INSTL	NP	5
	95-554017-3	. DUCT ASSY,DEFROST	1	6
- 1	96-550010-1	. DUCT ASSY,DEFROST	1	7
	96-554022	. DUCT ASSY,DEFROST/WITHOUT RADAR/	1	8
	96-554022-5	. DUCT ASSY,DEFROST/WITH RADAR/	1	8
		/ATTACHING PARTS/		
- 2	AN507-632R12	. SCREW	4	
	22NA17A-6Z	. NUT	4	
- 3	95-554017-9	. SUPPORT	1	
- 4	95-554017-10	. SUPPORT	1	
		/ATTACHING PARTS/		
- 5	AN507-632R12	. SCREW	4	
- 6	102933P2ZM0156	. SPACER	4	
	AN960-6	. WASHER	4	
- 7	95-554041-7	. ELBOW,AIR DUCT	2	10
- 8	95-550002-51	. COLLER,ELBOW	1	10
- 9	95-554041	. DUCT ASSY,DEFROST AIR	1	9
- 10	111716AX4XX32	. DUCT,DEFROST AIR	1	11
- 11	111716AX4XX44	. DUCT,DEFROST AIR	1	10
- 12	105798-6	. CLAMP	2	11
- 13	105798-9	. CLAMP	3	10
- 14	95-550001-15	. VALVE ASSY,DEFROST AIR	1	
- 15	35-550501-20	. . VALVE	1	
- 16	AN515-6R10	. . SCREW	2	
- 17	AN960-6	. . WASHER	2	
- 18	MS20365-632	. . NUT	2	
- 19	95-550001-13	. . WELD ASSY,DEFROST VALVE CONTROL ARM	1	
- 20	35-550501-14	. . DUCT ASSY,DEFROST VALVE	1	
- 21	414-183955-111	. . PIN	1	
	AN960-516	. . WASHER	1	
	AN380-2-3	. . PIN,COTTER	1	
- 22	95-940011-3	. CABLE ASSY,DEFROST VALVE CONTROL	1	12
	35-380051-29	. CABLE ASSY,DEFROST VALVE CONTROL	1	13
		/ATTACHING PARTS/		
- 23	35-550520	. PIN	1	
- 24	AN960-10	. WASHER	1	
- 25	MS20365-1032	. NUT	1	

CODES OF EFFECTIVITY

1 TC-1 THRU TC-501
2 TC-502 THRU TC-1042
3 TC-1043 THRU TC-1607
4 TE-1 THRU TE-451
5 TE-452 THRU TE-942 EXCEPT TE-938
6 TC-1 THRU TC-190
7 TC-191 THRU TC-1042 TE-1 THRU TE-451
8 TC-1043 THRU TC-1607 TE-452 THRU TE-942 EXCEPT TE-938
9 TC-502 THRU TC-954
10 TC-955 THRU TC-1607 TE-1 THRU TE-942 EXCEPT TE-938
11 TC-1 THRU TC-954
12 TC-1 THRU TC-1607 TE-1 THRU TE-767
13 TE-768 THRU TE-942 EXCEPT TE-938

"END"

30-60-01
PROPELLER ALCOHOL ANTI-ICE

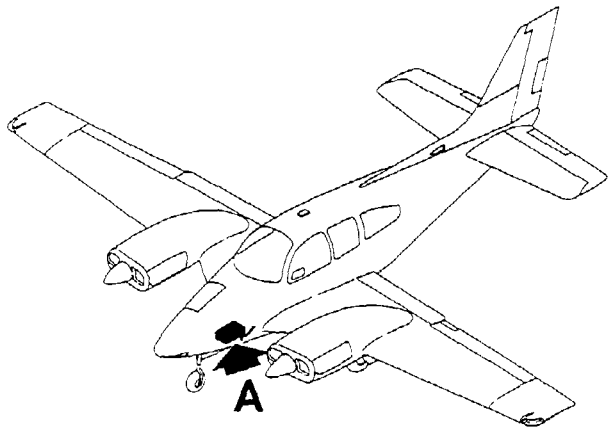

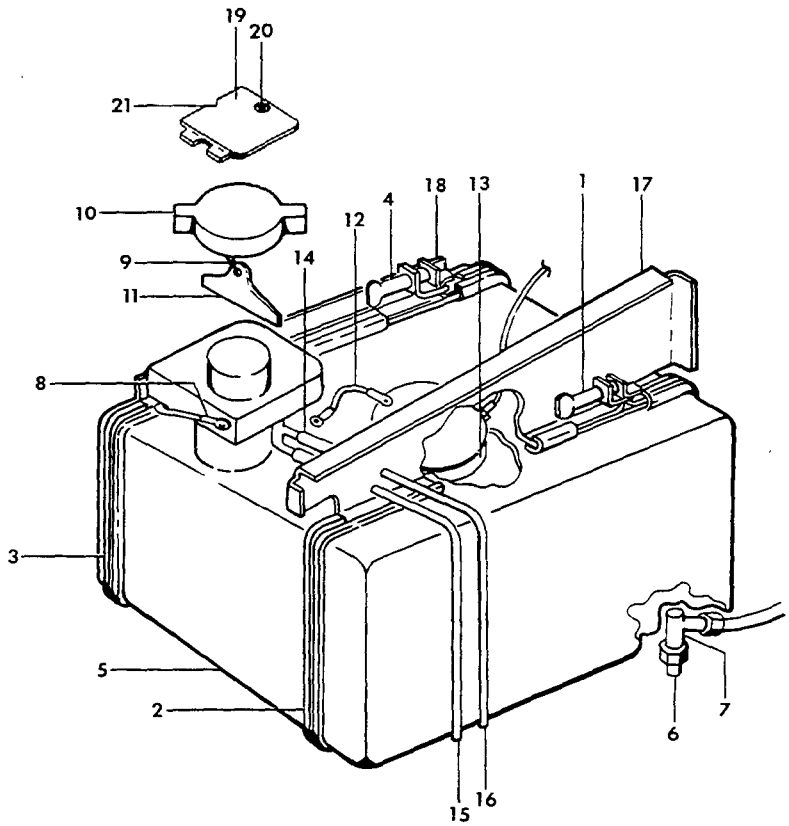

VIEW A

58-246-3

FIGURE 60-01.PROPELLER ALCOHOL ANTI-ICE
/SHEET 1 OF 3 SHEETS/

ATA CODE & INDEX NO.	PART NO.	DESCRIPTION 1 2 3 4 5 6 7	UNITS PER ASSY	USABLE ON CODE
60-01	96-960006	ANTI-ICE INSTL,PROPELLER/2 BLADE/	NP	1
	96-960006-41	ANTI-ICE INSTL,PROPELLER/2 BLADE/	NP	2
	96-960006-27	ANTI-ICE INSTL,PROPELLER/3 BLADE/	NP	3
	96-960008	ANTI-ICE INSTL,PROPELLER/2 BLADE/	NP	4
	96-960008-13	ANTI-ICE INSTL,PROPELLER/3 BLADE/	NP	4
	95-960007-602	. TANK ASSY,ANTI-ICE.	1	8
	96-960008-605	. TANK ASSY,ANTI-ICE.	1	9
		/ATTACHING PARTS/		
- 1	105798-41	. CLAMP/OUTBD STRAP/.	1	
- 2	105160-037	. STRIP,SCUFF/OUTBD STRAP/.	1	
- 3	105160-035	. STRIP,SCUFF/OUTBD STRAP/.	1	
- 4	105798-38	. CLAMP/INBD STRAP/	1	
		——+——		
- 5	95-960007-1	. . WELD ASSY,TANK.	1	
- 6	AN826-4D	. . TEE	1	
- 7	AN929-4	. . CAP	1	
- 8	AN749-1-6	. . JUMPER.	1	
		/ATTACHING PARTS/		
	AN515-8R8	. . SCREW	1	
	AN960-8	. . WASHER.	1	
	MS20365-832	. . NUT	1	
		——+——		
- 9	1189712-2	. . CHAIN,FILLER CAP.	1	
- 10	1189712-3	. . CAP	1	
- 11	S177	. . RETAINER.	1	
	39A4240	. . HOOK.	2	
- 12	AN749-1-4	. . JUMPER.	1	
- 13	58-380006	. . SENSOR.	1	9
	50-369050	. . TRANSMITTER	1	8
	35-921503	. . GASKET.	1	8
- 14	106200-4-10	. HOSE.	2	
- 15	95-960007-37	. TUBE,OVERFLOW	1	
- 16	95-960007-25	. TUBE,OVERFLOW	1	
	AN931-4-7	. GROMMET	4	
- 17	95-960007-23	. CHANNEL	1	
		/ATTACHING PARTS/		
	AN515-8R8	. SCREW	5	
	AN960-8	. WASHER.	5	
	MS20365-832	. NUT	5	
		——+——		
- 18	95-960007-35	. ANGLE	1	
		/ATTACHING PARTS/		
	AN515-8R8	. SCREW	5	
	AN960-8	. WASHER.	5	
	MS20365-832	. NUT	5	
		——+——		
	95-960007-606	. DOOR ASSY,FILLER.	1	14
	95-960007-610	. DOOR ASSY,FILLER.	1	15
	95-960007-19	. . DOOR.	1	14
- 19	95-960007-49	. . DOOR.	1	15
- 20	98265-1-090	. . STUD.	1	
	99836	. . PIN	1	
	95-960007-604	. DOUBLER ASSY,FILLER DOOR.	1	14
	95-960007-53	. DOUBLER ASSY,FILLER DOOR.	1	15
	95-960007-21	. . DOUBLER	1	14
	95-960007-51	. . WEB	1	15
- 21	95-960007-45	. . DOUBLER	1	15
	95-960007-47	. . DOUBLER	1	15
	99833P098	. . RECEPTACLE.	1	
	75 OHM 10W	. RESISTOR.	1	
	43C2-15K	. POTENTIOMETER	1	
	50-384001-31	. GAGE,ANTI-ICE QUANTITY.	1	
	7277-2-5	. CIRCUIT BREAKER	1	
	113-205-102	. CIRCUIT BREAKER,QUANTITY GAGE	1	

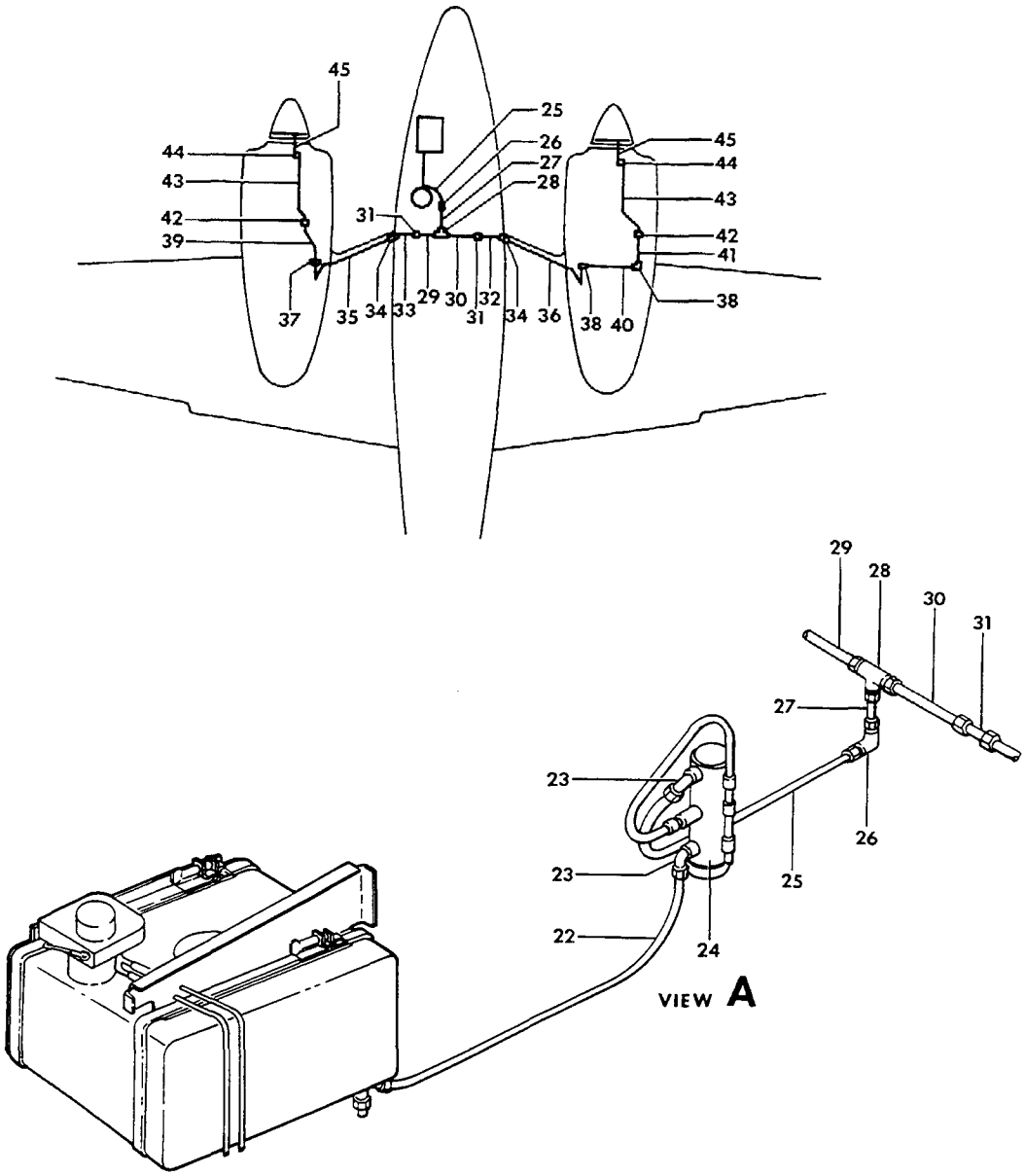

58-246-4

FIGURE 60-01.PROPELLER ALCOHOL ANTI-ICE
/SHEET 2 OF 3 SHEETS/

SUB-SECT UNIT & ITEM NO.	PART NO.	DESCRIPTION 1 2 3 4 5 6 7	UNITS PER ASSY	USABLE ON CODE
60-01	95-960007-27	TUBE ASSY	1	17
- 22	96-960008-3	TUBE ASSY	1	4
	AN931-4-12	GROMMET	1	
- 23	AN822-4D	ELBOW	2	
- 24	476284	PUMP	1	
	AN520-10R	SCREW	2	17
	AN3-3A/M/	BOLT	2	4
	AN960-10	WASHER	2	
- 25	95-960007-29	TUBE ASSY	1	
- 26	AN833-4D	ELBOW	1	
	AN924-4D	NUT	1	
- 27	95-960007-43	TUBE ASSY	1	
- 28	AN824-4D	TEE	1	4
	AN917-1D	TEE	1	16
	AN816-4B	NIPPLE	3	17
- 29	95-960007-39	TUBE ASSY,LH	1	
- 30	95-960007-41	TUBE ASSY,RH	1	
- 31	AN815-4D	UNION/LH & RH/	2	
- 32	95-960007-33	TUBE ASSY,LH	1	
- 33	95-960007-31	TUBE ASSY,RH	1	
- 34	AN833-4D	ELBOW	2	17
	AN833-4D	ELBOW,LH	1	4
	AN837-4D	ELBOW,RH	1	4
	AN924-4D	NUT	2	
	AN960-716	WASHER	2	
- 35	96-960006-5	TUBE ASSY,LH	1	
- 36	96-960006-3	TUBE ASSY,RH	1	
- 37	AN837-4	ELBOW,LH	1	
- 38	AN833-4D	ELBOW,RH	1	
	AN924-4D	NUT	2	
	AN960-716	WASHER	4	
- 39	MS28741-4-0170	HOSE,LH	1	
- 40	96-960006-31	TUBE ASSY,RH	1	
- 41	MS28741-4-0180	HOSE,LH	1	
- 42	AN832-4D	UNION	2	
	AN924-4D	NUT	2	
	AN960-716	WASHER	2	
- 43	96-960006-11	TUBE ASSY/LH & RH/	2	
- 44	AN821-4D	ELBOW	2	
- 45	96-960008-7	BOND ASSY/TUBE & RESTRICTOR LH & RH/	2	4
	R 96-960006-13	BOND ASSY/TUBE & RESTRICTOR LH & RH/	2	17

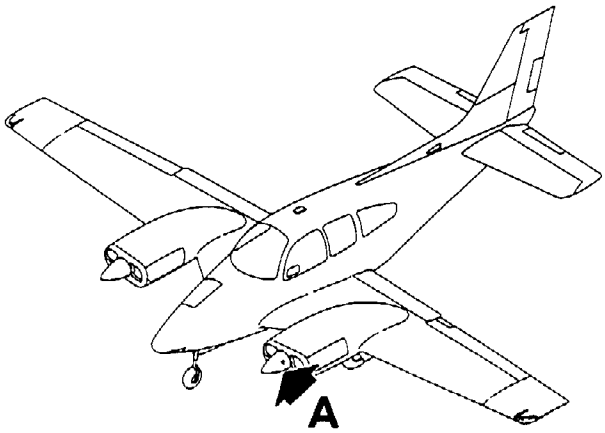

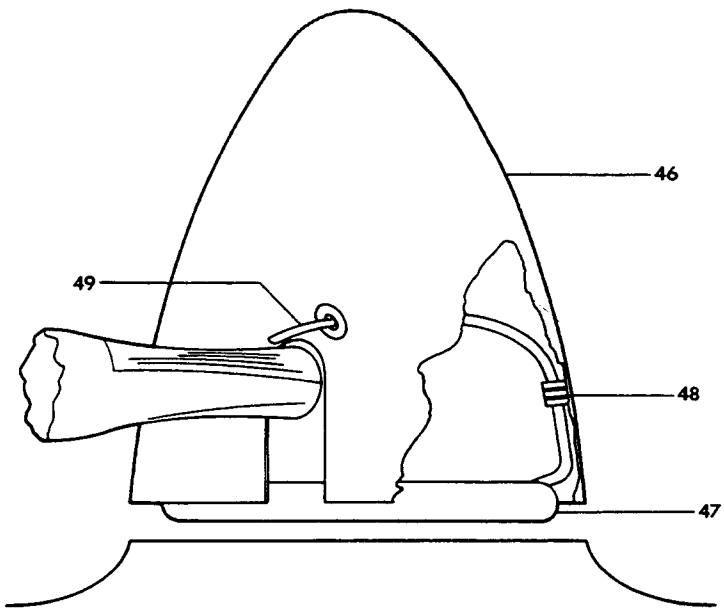

VIEW A

58-246-5

FIGURE 60-01.PROPELLER ALCOHOL ANTI-ICE
/SHEET 3 OF 3 SHEETS/

SUB-SECT UNIT & ITEM NO.	PART NO.	DESCRIPTION 1 2 3 4 5 6 7	UNITS PER ASSY	USABLE ON CODE
60-01	96-960006-18	. SPINNER ASSY/2 BLADE/	2	5
	96-960006-29	. SPINNER ASSY/2 BLADE/	2	6
	836-36P	. SPINNER ASSY/3 BLADE/	2	3
	96-960008-1	. SPINNER ASSY/2 BLADE/	2	7
	96-960008-15	. SPINNER ASSY/3 BLADE/	2	4
- 46	96-960006-39	. . SPINNER/2 BLADE/.	1	17
	D3461	. . SPINNER/2 BLADE/.	1	7
	D3607	. . SPINNER/3 BLADE/.	1	4
	D4046	. . SPINNER/2 BLADE	1	2
- 47	D2801	. . BULKHEAD & SLINGER RING ASSY/2 BLADE/ . . .	1	
	D3608	. . BULKHEAD & SLINGER RING ASSY/3 BLADE/ . . .	1	4
	D1976-6R	. . BULKHEAD ASSY/3 BLADE/.	1	3
	A2588	. . ANTI-ICE KIT,SPINNER/3 BLADE/	1	3
- 48	A2873	. . CLAMP,SPINNER ANTI-ICE TUBE	AR	
- 49	A2927	. . TUBE ASSY,ALCOHOL FEEDER/2 BLADE/	2	17
	R B2368-2	. . UNIT,TRAVEL TUBE.	1	4
	A3614	. . TUBE ASSY,ALCOHOL FEEDER/3 BLADE/	3	4
	96-960006-603	PROPELLER ASSY,ANTI-ICE/2 BLADE/.	2	10
	96-960006-604	PROPELLER ASSY,ANTI-ICE/2 BLADE/.	2	11
	PHC-AXF2B/V763 *	6DB PROPELLER ASSY,ANTI-ICE/3 BLADE/.	2	13
	96-960008-601	PROPELLER ASSY,ANTI-ICE/3 BLADE	2	4
	R 2AF36C39/78BFM-0	. PROPELLER ASSY/2 BLADE/	2	10
	2AF34C55/78FF-0	. PROPELLER ASSY/2 BLADE/	2	11
	PHC-A3XF2B/7636D	. PROPELLER ASSY/3 BLADE/	2	12
	PHC-A3VF2B/V76 *	36D . PROPELLER ASSY/3 BLADE/	2	13
	3AF32C75/82NB-6	. PROPELLER ASSY/3 BLADE/	2	4
	96-960006-7	. SHOE.	4	10
	96-960006-25	. SHOE/4 REQUIRED ON 2 BLADE PROPELLER/	6	11
	37572	. SHOE.	6	3

CODES OF EFFECTIVITY

1 TC-1 THRU TC-1236 AND TC-1267
2 TC-1237 THRU TC-1607 EXCEPT TC-1267
3 TC-502 THRU TC-1607
4 TE-1 THRU TE-942 EXCEPT TE-938
5 TC-1 THRU TC-472 EXCEPT TC-371
6 TC-371,TC-473 THRU TC-1236
7 TC-1237 THRU TC-1607 TE-1 THRU TE-942 EXCEPT TE-938
8 TC-1 THRU TC-1298 & TC-1329 THRU TC-1359 TE-1 THRU TE-769 & TE-801 THRU TE-826
9 TC-1299 THRU TC-1328 TC-1360 THRU TC-1607 TE-770 THRU TE-800 TE-827 THRU TE-942 EXCEPT TE-938
10 TC-1 THRU TC-472
11 TC-473 THRU TC-1607 TE-1 THRU TE-942 EXCEPT TE-938
12 TC-502 THRU TC-602
13 TC-603 THRU TC-1607
14 TC-1 THRU TC-121
15 TC-122 THRU TC-1607 TE-1 THRU TE-942 EXCEPT TE-938
16 TC-1 THRU TC-1236
17 TC-1 THRU TC-1607

"END"

30-60-10
PROPELLER ELECTRIC ANTI-ICE/2 BLADE/
TC-350,TC-715,TC-874 THRU TC-1451
TE-1 THRU TE-863

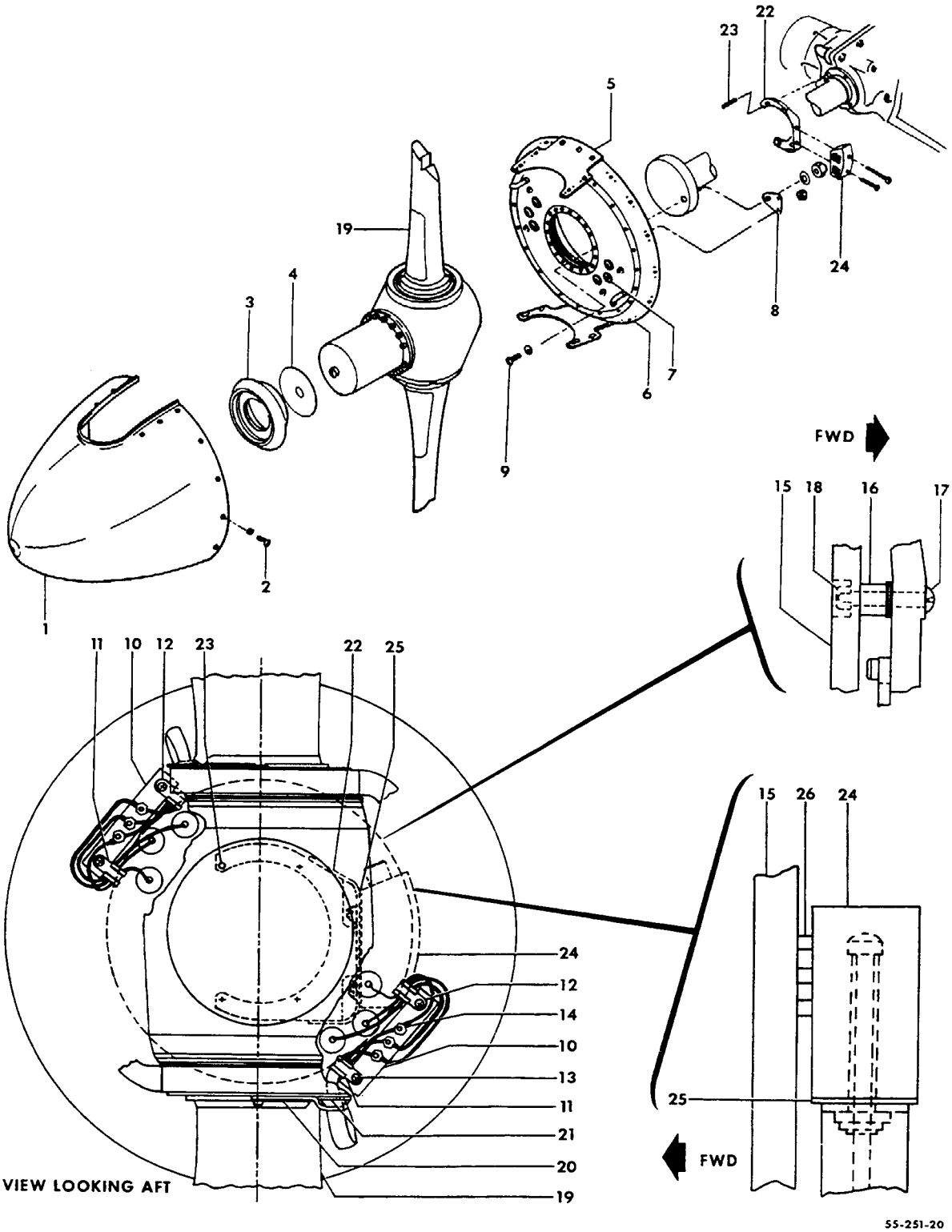

FIGURE 60-10.PROPELLER ELEC ANTI-ICE/2 BLADE/
/SHEET 1 OF 2 SHEETS/

ATA CODE & INDEX NO.	PART NO.	DESCRIPTION 1 2 3 4 5 6 7	UNITS PER ASSY	USABLE ON CODE
60-10	96-960007-614	PROPELLER ASSY,2 BLADE/WITH ELEC ANTI-ICE/. . .	2	5
	96-960007-5	. ANTI-ICE INSTL,28 VOLT DC/2 BLADE/.	NP	1
	96-960007-19	. ANTI-ICE INSTL,28 VOLT DC/2 BLADE/.	NP	2
	96-960007-3	. ANTI-ICE INSTL,28 VOLT DC/2 BLADE/.	NP	3
	96-960007-27	. ANTI-ICE INSTL,28 VOLT DC/2 BLADE/WEDGELITE/.	NP	4
	96-960007-29	. ANTI-ICE INSTL,28 VOLT DC/2 BLADE/WEDGELITE/.	NP	4
	96-960007-612	. . SPINNER ASSY,ELECTRIC ANTI-ICE.	1	1
	96-960007-608	. . SPINNER ASSY,ELECTRIC ANTI-ICE.	1	4
	D2747	. . . SHELL,SPINNER	1	1
- 1	D3419	. . . SHELL,SPINNER	1	4
- 2	A1635-39	. . . SCREW	22	5
	A1638-5	. . . WASHER,FIBER.	22	5
	B3275	. . . SUPPORT,SPINNER	1	1
- 3	B3348	. . . SUPPORT,SPINNER	1	4
	B3281-1	. . . SHIM,SPINNER SUPPORT/0.016 IN/.	AR	5
- 4	B3281-2	. . . SHIM,SPINNER SUPPORT/0.032 IN/.	AR	5
	D3403	. . . BULKHEAD AND FILLET ASSY.	1	5
- 5	B2857	. . . . FILLET ASSY	1	5
- 6	D3402	. . . . BULKHEAD ASSY	1	5
- 7	AN931-3-9	. . . . GROMMET	12	5
	22NC3-02	. . . . NUT,CLINCH.	4	5
	320-601A	. . KIT,ELEC ANTI-ICE/2 BLADE/28 VOLT DC/ . . .	1	6
	320-629A	. . KIT,ELEC ANTI-ICE/2 BLADE/28 VOLT DC/ . . .	1	3
- 8	1065-2985	. . . LUG,BULKHEAD.	6	5
- 9	A1635-38	. . . SCREW	2	5
	A1638-5	. . . WASHER.	2	5
- 10	50-300008-3	. . . BLOCK,TERMINAL.	2	5
- 11	MS21919WDG3	. . . CLAMP,CUSHIONED	1	5
- 12	MS21919WDG4	. . . CLAMP,CUSHIONED	1	5
- 13	AN520-10R12	. . . SCREW	2	5
- 14	MS25036-7	. . . LUG,TERMINAL.	12	5
- 15	4065-3180	. . . RING,SLIP	1	5
- 16	1065-2670	. . . SPACER.	6	5
- 17	AN509-10R26	. . . SCREW	6	5
	MS35335-32	. . . WASHER,LOCK	6	5
	AN960D10L	. . . WASHER.	18	5
- 18	22NW2234-02	. . . NUT	6	5
- 19	50-300008-29	. . . BOOT,PROPELLER ANTI-ICE	2	5
- 20	2065-2812	. . . CLAMP,BOOT LEAD	2	5
- 21	96-960007-13	. . . PAD,NEOPRENE.	4	5
- 22	3065-2480	. . . BRACKET,BRUSH BLOCK	2	6
	3065-3289	. . . BRACKET,BRUSH BLOCK	2	3
		/ATTACHING PARTS/		
- 23	1065-2623	. . . STUD.	4	
	AN960-10L	. . . WASHER.	4	
	AN936A10	. . . WASHER.	4	
	13XX1896	. . . NUT	4	
		——+——		
- 24	3065-2482	. . . BLOCK ASSY,BRUSH.	2	5
		/ATTACHING PARTS/		
- 25	3065-2481-3	. . . SHIM,BRUSH BLOCK.	2	
	AN501AD10-28	. . . SCREW	1	
	AN501AD10-34	. . . SCREW	1	
	AN960C10	. . . WASHER.	2	
		——+——		
- 26	2065-2660	. . . . BRUSH	3	5

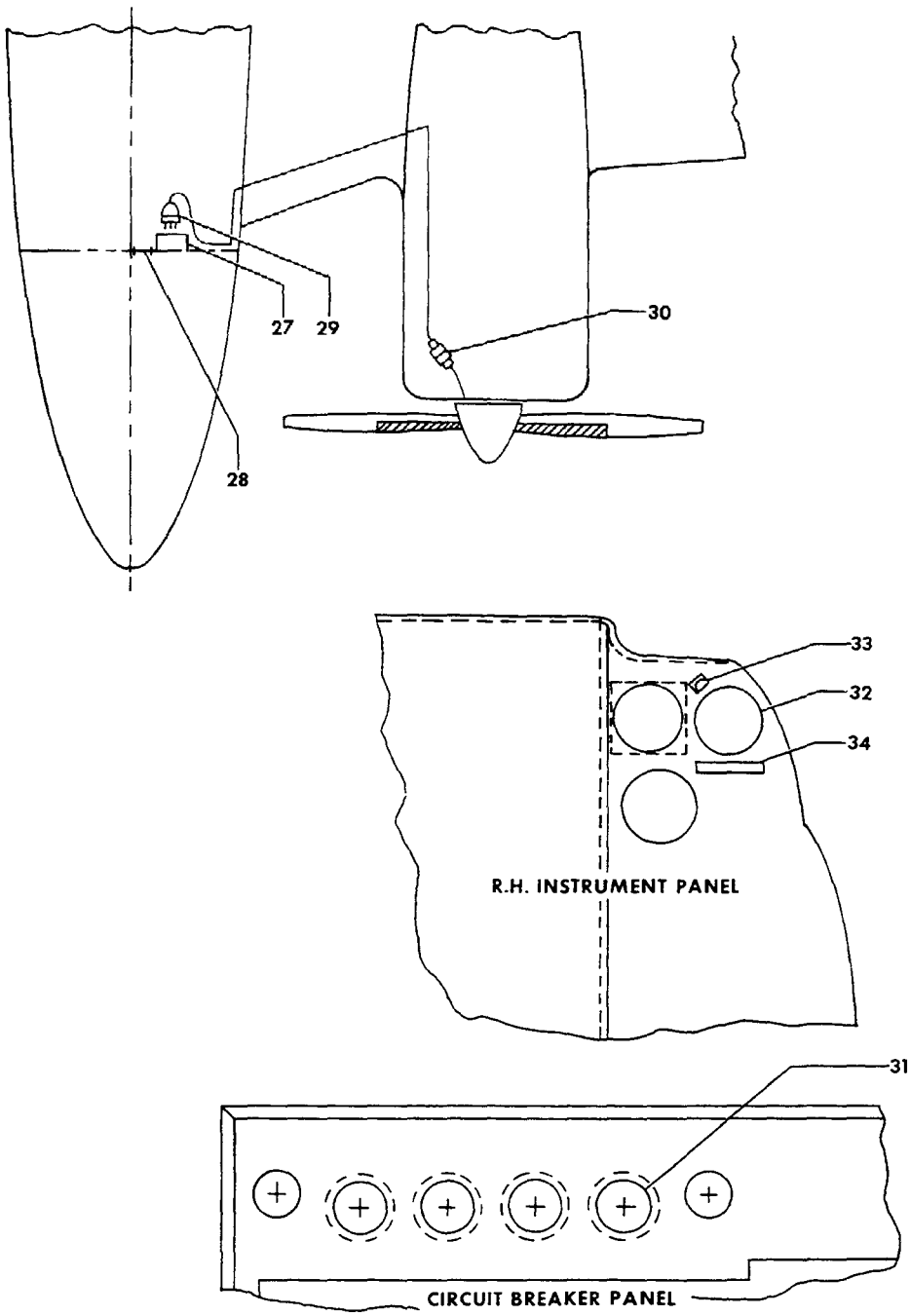

55-251-21

FIGURE 60-10.PROPELLER ELEC ANTI-ICE/2 BLADE/
/SHEET 2 OF 2 SHEETS/

SUB-SECT UNIT & ITEM NO.	PART NO.	DESCRIPTION 1 2 3 4 5 6 7	UNITS PER ASSY	USABLE ON CODE
60-10 - 27	4065-2420	. . . TIMER,ELEC ANTI-ICE . . . . . /ATTACHING PARTS/	1	5
	AN520-10R6	. . . SCREW	4	
		----*----		
- 28	AN3200-30	. . SHUNT,AMMETER . . . . . /ATTACHING PARTS/	1	5
	AN520-10R	. . SCREW	2	
		----*----		
	96-960007-602	. . WIRE ASSY,ELECTRIC PROP ANTI-ICE.	1	5
- 29	AN3106A20-15S	. . . PLUG,TIMER.	1	5
	AN3057-12	. . . CLAMP	1	5
- 30	MS3106-10SL3S	. . . PLUG,BRUSH BLOCK.	2	5
- 31	C33115A	. . SWITCH,CIRCUIT BREAKER.	1	10
	35-380132-5	. . SWITCH,CIRCUIT BREAKER.	1	11
- 32 R	50-380086-1	. . AMMETER/POST LIGHT/	1	7
	50-380086-11	. . AMMETER/POST LIGHT/	1	9
	96-384062-1	. . AMMETER/WEDGELITE/.	1	3
	96-384062-7	. . AMMETER/WEDGELITE/.	1	9
- 33	A8970-1-327	. . LIGHT ASSY,POST	1	5
	327	. . . BULB.	1	5
	53-380022-11	. . LIGHT TRAY ASSY/WEDGELITE/.	1	4
- 34	96-960012	. . PLACARD,PROP ANTI-ICE	1	5

CODES OF EFFECTIVITY

1	TC-715,TC-874 THRU TC-1096	2	TC-1097 THRU TC-1451
3	TC-350,TE-1 THRU TE-863	4	TC-1097 THRU TC-1451 AND TC-350 TE-1 THRU TE-863
5	TC-350,TC-715 AND TC-874 THRU TC-1451 TE-1 THRU TE-863	6	TC-715,TC-874 THRU TC-1451
7	TC-350,TC-715 AND TC-874 THRU TC-1386 TE-1 THRU TE-838	8	TC-350,TC-1097 THRU TC-1386 TE-1 THRU TE-838
9	TC-1387 THRU TC-1451 TE-839 THRU TE-863	10	TC-350,TC-715, TC-874 THRU TC-1451 TE-1 THRU TE-767
11	TE-768 THRU TE-863		

30-62-01
ELECTROTHERMAL PROPELLER DEICER
TC-1452 THRU TC-1607

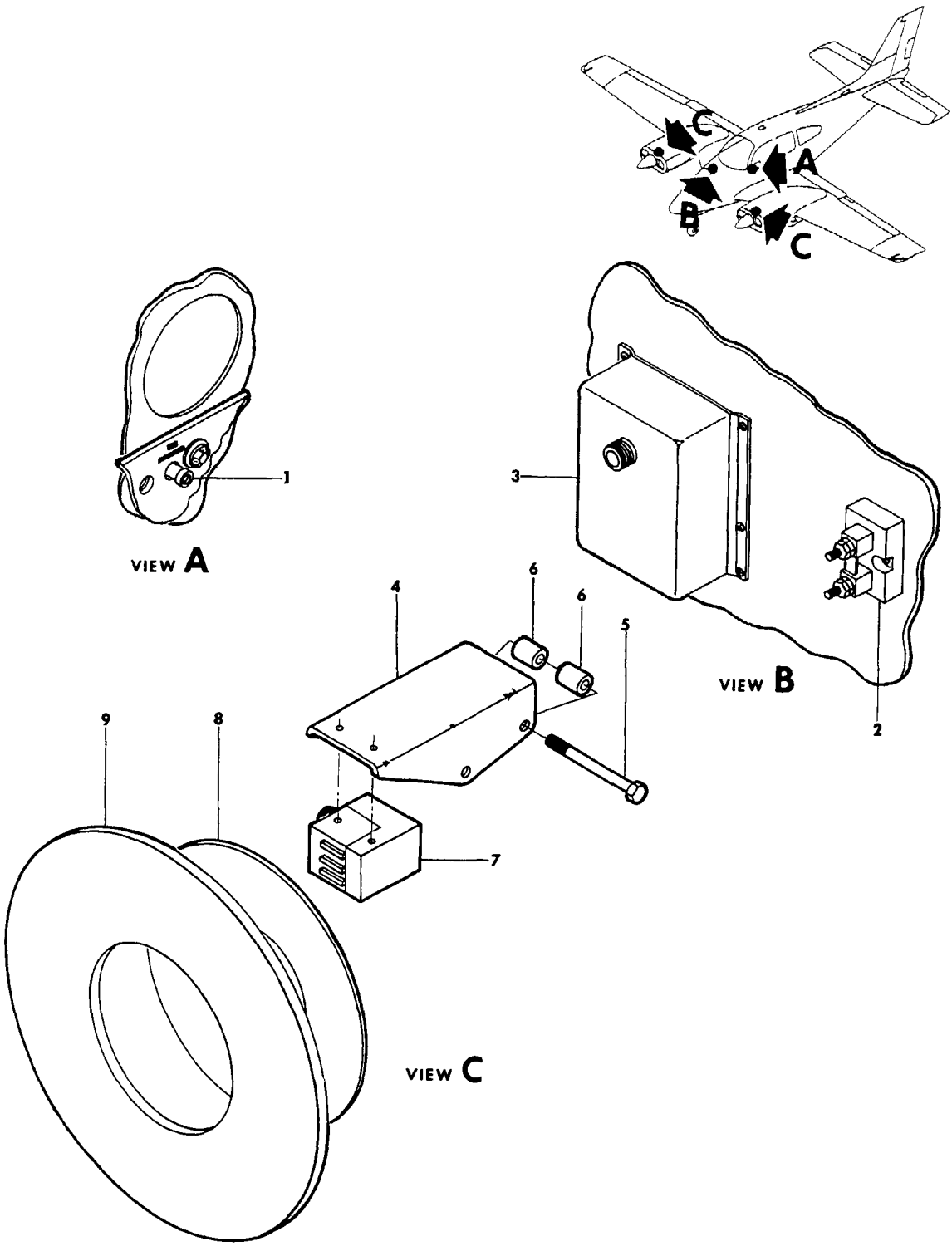

FIGURE 62-01.ELECTROTHERMAL PROPELLER DEICER
/SHEET 1 OF 2 SHEETS/

ATA CODE & INDEX NO.	PART NO.	DESCRIPTION 1 2 3 4 5 6 7	UNITS PER ASSY	USABLE ON CODE
62-01	96-960022-1	DEICER INSTL,2 BLADE PROP ELECTROTHERMAL. . . .	NP	1
	96-960022-3	DEICER INSTL,2 BLADE PROP ELECTROTHERMAL. . . . /WEDGE LIT/	NP	1
	96-960022-5	DEICER INSTL,2 BLADE PROP ELECTROTHERMAL. . . . /WITH SURFACE DEICE AND GENERATOR/	NP	1
	96-960022-7	DEICER INSTL,2 BLADE PROP ELECTROTHERMAL. . . . /WEDGE LIT WITH SURFACE DEICE & GENERATOR/	NP	1
	96-960022-9	DEICER INSTL,2 BLADE PROP ELECTROTHERMAL. . . . /WITH SURFACE DEICE AND ALTERNATOR/	NP	1
	96-960022-11	DEICER INSTL,2 BLADE PROP ELECTROTHERMAL. . . . /WEDGE LIT WITH SURFACE DEICE & ALTERNATOR/	NP	1
	96-960022-13	DEICER INSTL,3 BLADE PROP ELECTROTHERMAL. . . .	NP	1
	96-960022-15	DEICER INSTL,3 BLADE PROP ELECTROTHERMAL. . . . /WEDGE LIT/	NP	1
	96-960022-17	DEICER INSTL,3 BLADE PROP ELECTROTHERMAL. . . . /WITH SURFACE DEICE AND GENERATOR/	NP	1
	96-960022-19	DEICER INSTL,3 BLADE PROP ELECTROTHERMAL. . . . /WEDGE LIT WITH SURFACE DEICE & GENERATOR/	NP	1
	96-960022-21	DEICER INSTL,3 BLADE PROP ELECTROTHERMAL. . . . /WITH SURFACE DEICE AND ALTERNATOR/	NP	1
	96-960022-23	DEICER INSTL,3 BLADE PROP ELECTROTHERMAL. . . . /WEDGE LIT WITH SURFACE DEICE & ALTERNATOR/	NP	1
- 1	113-215-102	. CIRCUIT BREAKER	1	1
	113-220-102	. CIRCUIT BREAKER/3 BLADE PROP/	1	1
	96-384062-7	. AMMETER,2 BLADE PROPELLER/WEDGE LIT/.	1	1
	50-380086-11	. AMMETER,2 BLADE PROPELLER/POST LIT/	1	1
	96-384062-5	. AMMETER,3 BLADE PROPELLER/WEDGE LIT/.	1	1
	50-380086-7	. AMMETER,3 BLADE PROPELLER/POST LIT/	1	1
	58-380022-11	. TRAY ASSY,LIGHT . . . . . /ATTACHING PARTS/	1	1
	MS35198-11	. SCREW	1	
	MS35198-12	. SCREW	1	1
		——*——		
- 2	MS91586-1	. SHUNT	1	1
	MS3106A20-15S	. PLUG,DEICER TIMER	1	1
	MS3057-12A	. CLAMP,PLUG.	1	1
	MS3106-10SL3S	. PLUG,BRUSH BLOCK.	1	1
	MS3054-4	. CLAMP,PLUG.	1	1
	65-050	. DEICING KIT,PROPELLER/2 BLADE PROP/	1	1
	65-055	. DEICING KIT,PROPELLER/3 BLADE PROP/	1	1
- 3	3E1150-3	. . TIMER . . . . . /ATTACHING PARTS/	1	1
	AN520-10R6	. . SCREW	8	
	AN960B10	. . WASHER.	8	
	MS1329A3K8	. . RIVNUT.	8	
		——*——		
- 4	3E1513	. . BRACKET,BRUSH BLOCK MOUNTING.	2	1
- 5	AN5-26A	. . BOLT,BRACKET ATTACHING.	4	1
- 6	1E1297	. . SPACER.	2	1
- 7	4E1387-5	. . BLOCK ASSY,BRUSH. . . . . /ATTACHING PARTS/	2	1
	MS51957-52	. . SCREW	4	
	1E1157	. . SHIM.	2	
	AN960C8	. . WASHER.	8	
	MS21045-08	. . NUT	4	
		——*——		
- 8	4E1881	. . PLATE,SPLIT MOUNTING.	4	1
- 9	4E1923-1	. . RING ASSY,SLIP/2 BLADE PROP/.	2	1
	4E1924-1	. . RING ASSY,SLIP/3 BLADE PROP/. . . . . /ATTACHING PARTS/	2	1
	AN4C6A	. . BOLT.	12	
	AN960C416L	. . WASHER.	12	
	4M52	. . WASHER.	12	
	H10-4	. . NUT	12	
		——*——		

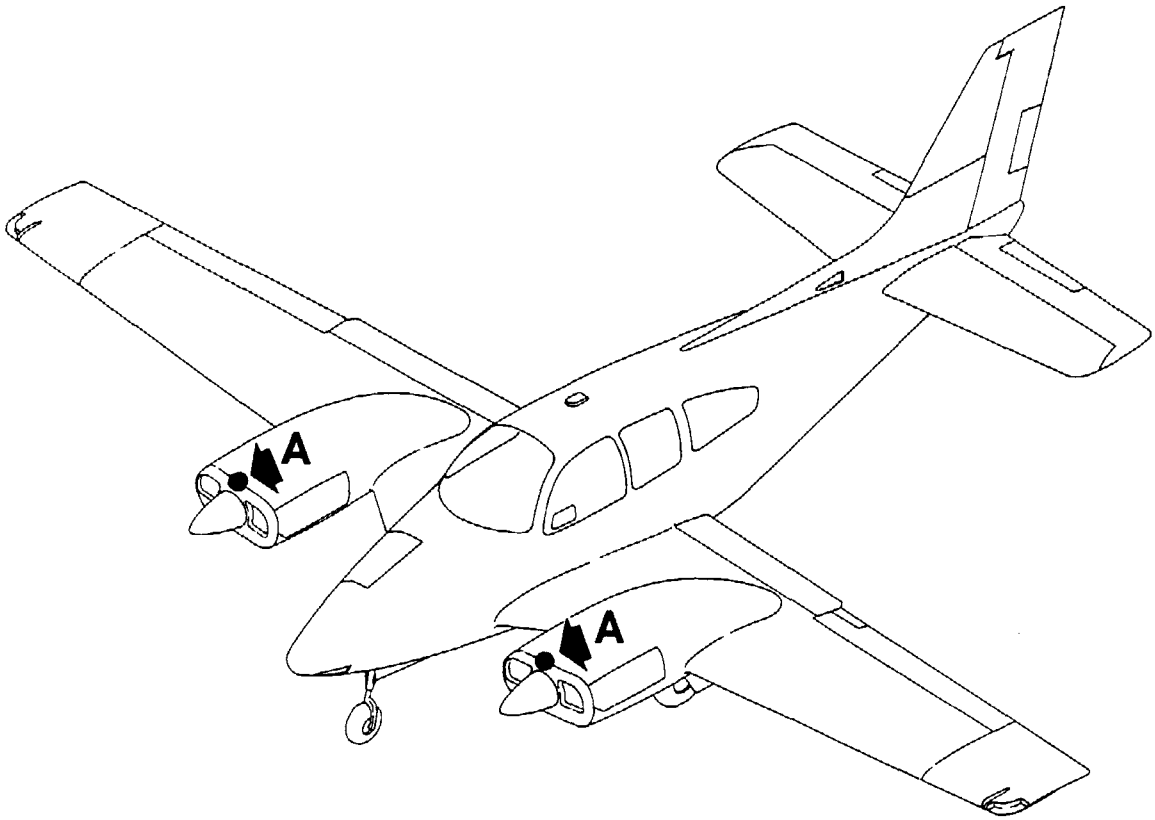

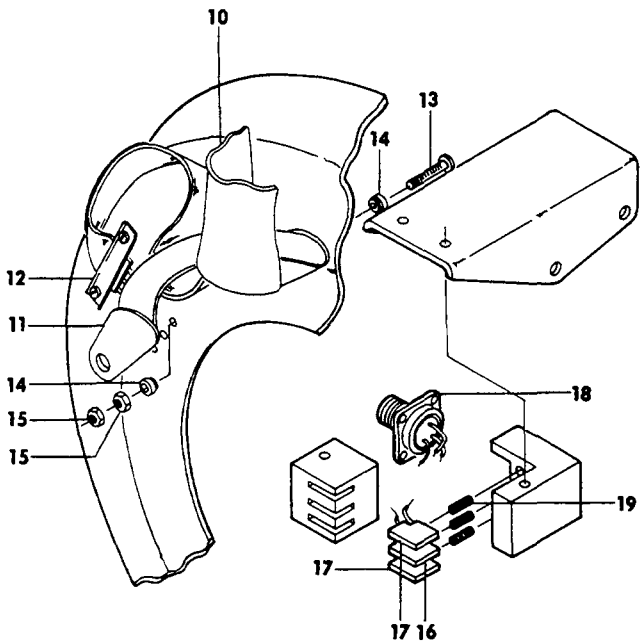

55-251-13

VIEW **A**

FIGURE 62-01.ELECTROTHERMAL PROPELLER DEICER
/SHEET 2 OF 2 SHEETS/

ATA CODE & INDEX NO.	PART NO.	DESCRIPTION 1 2 3 4 5 6 7	UNITS PER ASSY	USABLE ON CODE
62-01	96-960022-601	. . PACKAGE,PROP KIT/2 BLADE PROP/.	1	1
	96-960022-603	. . PACKAGE,PROP KIT/3 BLADE PROP/.	1	1
- 10	4E1188-3	. . . BOOT,PROPELLER DEICER	6	1
- 11	4E1513	. . . RESTRAINER,STRAP.	6	1
		/ATTACHING PARTS/		
	AN960C616	. . . WASHER/USE EXISTING BOLT,NUT AND SPACER/.	6	
	AN960C616L	. . . WASHER.	12	
		——*——		
	MS17821-3-9	. . . STRAP,TIE	6	1
- 12	3E1271-2	. . CLIP,LEAD	6	1
		/ATTACHING PARTS/		
	MS51957-30	. . SCREW	12	
	AN960C6	. . WASHER.	12	
	MS21045-06	. . NUT	12	
		——*——		
- 13	6-32X3/4LG	. . SCREW,BRASS/TERMINAL ASSY/.	18	1
	MS35333-37	. . WASHER.	54	1
- 14	2E1260	. . BUSHING	36	1
- 15	MS35649-65	. . NUT	36	1
	96-960022-25	. SPINNER ASSY/2 BLADE PROP/.	1	1
	96-960022-27	. SPINNER ASSY/3 BLADE PROP/.	1	1
- 16	3E1443-2	. . BRUSH	1	1
- 17	3E1443-1	. . BRUSH	2	1
- 18	MS3102A105L3P	. . RECEPTACLE.	1	1
- 19	1E1136	. . SPRING.	3	1

CODES OF EFFECTIVITY

1 TC-1452 THRU TC-1607

"END"

30-64-01
ELECTROTHERMAL PROPELLER DEICER
TE-864 THRU TE-942 EXCEPT TE-938

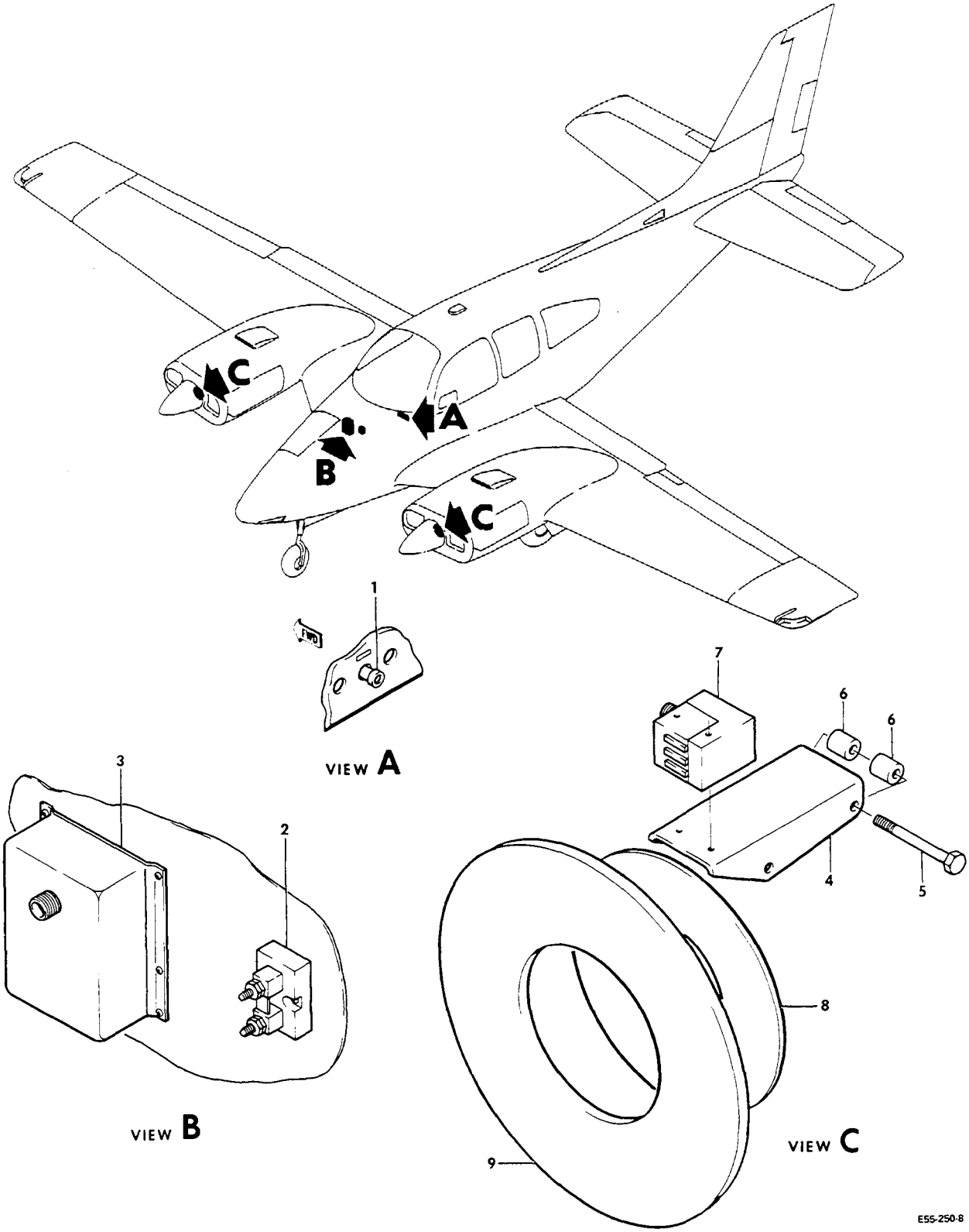

FIGURE 64-01.ELECTROTHERMAL PROPELLER DEICER
/SHEET 1 OF 2 SHEETS/

ATA CODE & INDEX NO.	PART NO.	DESCRIPTION 1 2 3 4 5 6 7	UNITS PER ASSY	USABLE ON CODE
64-01	96-960021-1	DEICER INSTL,2 BLADE PROP ELECTROTHERMAL. . . .	NP	1
	96-960021-3	DEICER INSTL,2 BLADE PROP ELECTROTHERMAL. . . . /WEDGE LIT/	NP	1
	96-960021-5	DEICER INSTL,2 BLADE PROP ELECTROTHERMAL. . . . /WITH SURFACE DEICER/	NP	1
	96-960021-7	DEICER INSTL,2 BLADE PROP ELECTROTHERMAL. . . . /WEDGE LIT WITH SURFACE DEICE/	NP	1
	96-960020-1	DEICER INSTL,3 BLADE PROP ELECTROTHERMAL. . . .	NP	1
	96-960020-3	DEICER INSTL,3 BLADE PROP ELECTROTHERMAL. . . . /WEDGE LIT/	NP	1
	96-960020-5	DEICER INSTL,3 BLADE PROP ELECTROTHERMAL. . . . /WITH SURFACE DEICE/	NP	1
	96-960020-7	DEICER INSTL,3 BLADE PROP ELECTROTHERMAL. . . . /WEDGE LIT WITH SURFACE DEICE/	NP	1
- 1	35-380132-5	. CIRCUIT BREAKER/2 BLADE PROP/	1	1
	35-380132-7	. CIRCUIT BREAKER/3 BLADE PROP/	1	1
	96-384062-7	. AMMETER/WEDGE LIT,2 BLADE PROP/	1	1
	50-380086-11	. AMMETER/POST LIT,2 BLADE PROP/.	1	1
	96-384062-5	. AMMETER/WEDGE LIT,3 BLADE PROP/	1	1
	50-380086-7	. AMMETER/POST LIT,3 BLADE PROP/.	1	1
	58-380022-11	. TRAY ASSY,LIGHT . . . . . /ATTACHING PARTS/	1	1
	MS35198-11	. SCREW	1	
	MS35198-12	. SCREW	1	
		----*----		
- 2	MS91586-1	. SHUNT	1	1
	MS3106A20-15S	. PLUG,ELECTRICAL DEICER TIMER.	1	1
	MS3057-12A	. CLAMP,PLUG.	1	1
	MS3106-10SL3S	. PLUG,BRUSH BLOCK.	2	1
	MS3057-4	. CLAMP,PLUG.	2	1
	65-050	. KIT,DEICER/2 BLADE PROP/.	1	1
	65-055	. KIT DEICER/3 BLADE PROP/.	1	1
- 3	3E1150-3	. . TIMER,DEICER. . . . . /ATTACHING PARTS/	1	1
	AN520-10R6	. . SCREW	8	
	AN960810	. . WASHER.	8	
	NAS1329A3K8	. . RIVNUT.	8	
		----*----		
- 4	3E1461	. . BRACKET,BRUSH BLOCK MOUNTING.	2	1
- 5	AN5-25A/M/	. . BOLT.	4	1
- 6	1E1297	. . SPACER/USE EXISTING NUT/.	8	1
- 7	4E1387-5	. . BLOCK ASSY,BRUSH. . . . . /ATTACHING PARTS/	2	1
	MS51957-52	. . SCREW	4	
	1E1157	. . SHIM.	2	
	AN960C8	. . WASHER.	8	
	MS21045-08	. . NUT	4	
		----*----		
- 8	4E1881	. . PLATE,SPLIT MOUNTING.	4	1
- 9	4E1923-1	. . RING ASSY,SLIP/2 BLADE PROP/.	2	1
	4E1924-1	. . RING ASSY,SLIP/3 BLADE PROP/. . . . . /ATTACHING PARTS/	2	1
	AN4C6A	. . BOLT.	12	
	AN960C416L	. . WASHER.	12	
	4M52	. . WASHER.	12	
	H10-4	. . NUT	12	
		----*----		

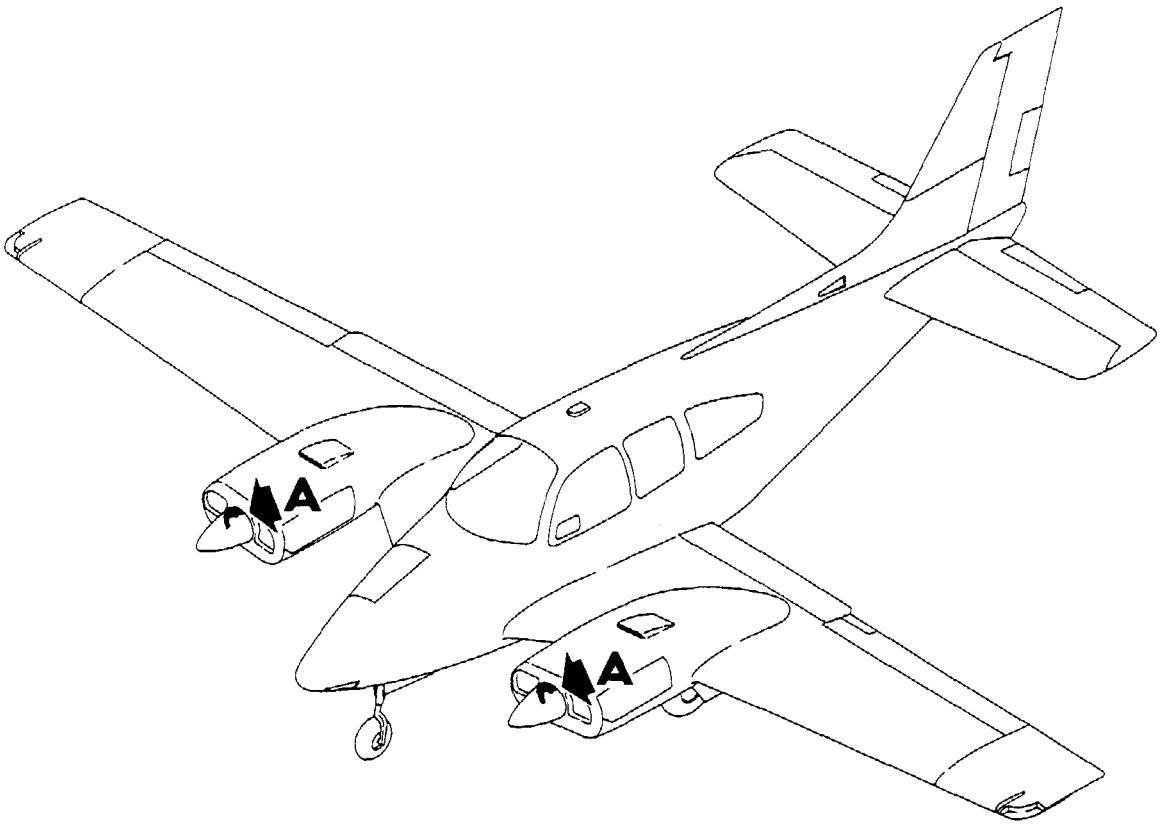

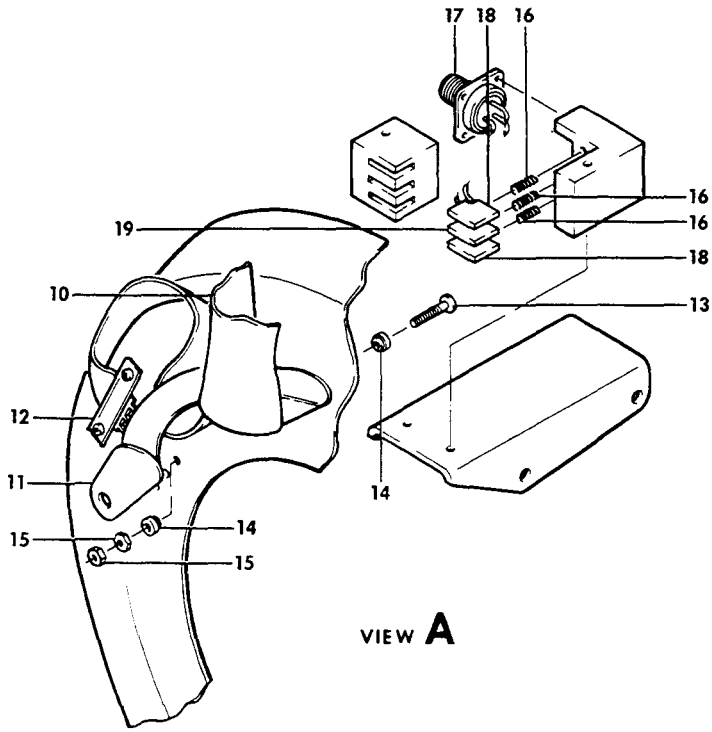

E55-250-9

FIGURE 64-01.ELECTROTHERMAL PROPELLER DEICER
/SHEET 2 OF 2 SHEETS/

ATA CODE & INDEX NO.	PART NO.	DESCRIPTION 1 2 3 4 5 6 7	UNITS PER ASSY	USABLE ON CODE
64-01	96-960021-609	. . PACKAGE,PROP DEICER KIT/2 BLADE PROP/ . . .	1	1
	96-960020-602	. . PACKAGE,PROP DEICER KIT/3 BLADE PROP/ . . .	1	1
- 10	4E1188-3	. . . BOOT,PROP DEICER.	6	1
- 11	4E1513	. . . RESTRAINER,STRAP.	6	1
		/ATTACHING PARTS/		
	AN960C616	. . . WASHER.	6	
	AN960C616L	. . . WASHER/USE EXISTING BOLT,SPACER,AND NUT/.	12	
		——*——		
	MS17821-3-9	. . . STRAP,TIE	6	1
- 12	3E1271-2	. . CLIP,LEAD	6	1
		/ATTACHING PARTS/		
	MS51957-30	. . SCREW	12	
	AN960C6	. . WASHER.	12	
	MS21045-06	. . NUT	12	
		——*——		
- 13	6-32X3/4LG	. . SCREW,BRASS/TERMINAL/	18	1
	MS35333-37	. . WASHER.	54	1
- 14	2E1260	. . BUSHING	36	1
- 15	MS35649-65	. . NUT	36	1
- 16	1E1136	. . SPRING,BRUSH.	6	1
- 17	MS3102A10SL3P	. . RECEPTACLE.	2	1
- 18	3E1443-1	. . BRUSH	4	1
- 19	3E1443-2	. . BRUSH	2	1
	96-910012-119	. COWLING INSTL	NP	1
	96-960021-9	. SPINNER ASSY/2 BLADE PROP/.	2	1
	96-960020-9	. SPINNER ASSY/3 BLADE PROP/.	2	1

CODES OF EFFECTIVITY

1 TE-864 THRU TE-942
EXCEPT TE-938

"END"

CHAPTER 31

INDICATING/ RECORDING SYSTEMS

LIST OF PAGES & TABLE OF CONTENTS
FOR
CHAPTER 31-00-00 IND/RECORDING SYSTEMS

CHAP/SUB-SECT & UNIT	PAGE NO.	EFFECTIVE DATE	TABLE OF CONTENTS
31-00-00	1	04/05/85	LIST OF PAGES & TABLE OF CONTENTS
31-30-01	1	03/10/78	FLIGHT AND ENGINE HOUR METERS
31-30-01	2	03/10/78	
31-30-01	3	04/05/85	

31-30-01
FLIGHT AND ENGINE HOUR METERS

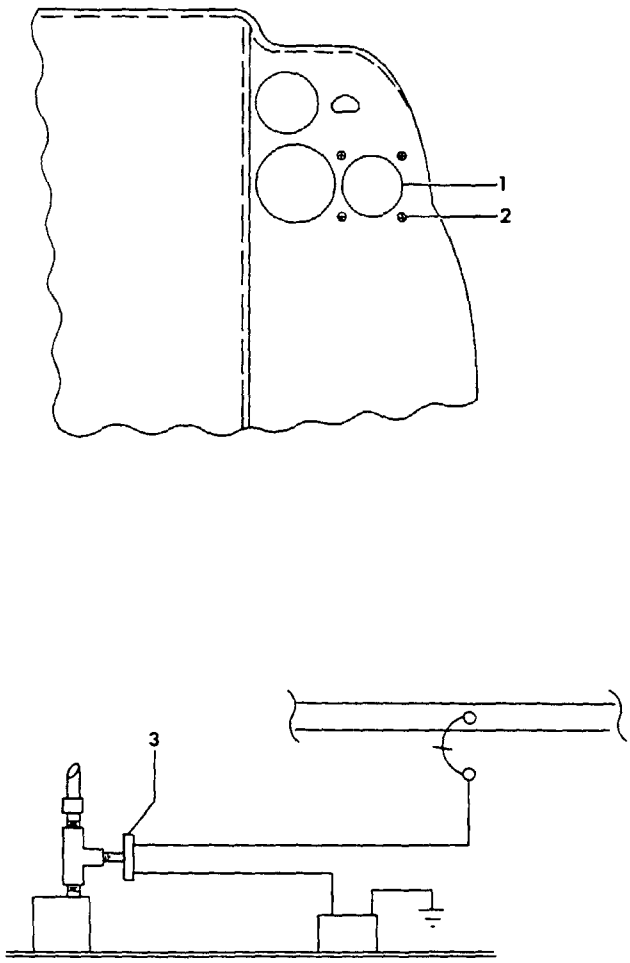

55-392-30

FIGURE 30-01.FLIGHT AND ENGINE HOUR METERS

SUB-SECT UNIT & ITEM NO.	PART NO.	DESCRIPTION 1 2 3 4 5 6 7	UNITS PER ASSY	USABLE ON CODE
30-01	96-324020	METER INSTL,ENGINE HOUR	NP	1
	96-324023	METER INSTL,ENGINE HOUR	NP	2
- 1	R 573E-24VB	. METER,ENGINE HOUR/ALTERNATE FOR MI-968/ . . . /ATTACHING PARTS/	1	
- 2	AN507B-632-4	. SCREW	4	
	R AN816-4D	. NIPPLE.	1	
	R AN917-1D	. TEE	1	
- 3	M1-672	. SWITCH,PRESSURE	1	1
	M4006	. SWITCH,PRESSURE	1	2
	R 96-324022	METER INSTL,FLIGHT HOUR	NP	1
	96-324024	METER INSTL,FLIGHT HOUR	NP	2
	58-324027	METER INSTL,FLIGHT HOUR	NP	3
	R M1-990	. METER,FLIGHT HOUR/ALTERNATE FOR 573F24VB/ . . /ATTACHING PARTS/	1	
	AN507B-632	. SCREW	3	

CODES OF EFFECTIVITY

1 TC-1 THRU TC-190
2 TC-191 THRU TC-1607
TE-1 THRU TE-767
3 TE-768 THRU TE-937
TE-938 THRU TE-942

"END"

CHAPTER

32

LANDING GEAR

LIST OF PAGES & TABLE OF CONTENTS
FOR
CHAPTER 32-00-00 LANDING GEAR

CHAP/SUB-SECT & UNIT	PAGE NO.	EFFECTIVE DATE	TABLE OF CONTENTS
32-00-00	1	04/05/85	LIST OF PAGES & TABLE OF CONTENTS
32-00-00	2	04/05/85	
32-00-00	3	04/05/85	
32-10-01	1	03/10/78	MAIN LANDING GEAR INSTALLATION
32-10-01	2	03/10/78	
32-10-01	3	03/10/78	
32-10-01	4	03/10/78	
32-10-01	5	03/10/78	
32-10-10	1	03/10/78	MAIN LANDING GEAR ASSEMBLY
32-10-10	2	03/10/78	TC-1 THRU TC-354 EXCEPT TC-251 & TC-344
32-10-10	3	04/30/84	
32-10-10	4	03/10/78	
32-10-10	5	03/10/78	
32-10-10	6	03/10/78	
32-10-10	7	03/10/78	
32-10-10	8	03/10/78	
32-10-10	9	03/10/78	
32-10-20	1	03/10/78	MAIN LANDING GEAR ASSEMBLY
32-10-20	2	03/10/78	TC-251,TC-344,TC-355 THRU TC-1607
32-10-20	3	03/10/78	TE-1 THRU TE-942 EXCEPT TE-938
32-10-20	4	03/10/78	
32-10-20	5	03/10/78	
32-10-20	6	03/10/78	
32-10-20	7	03/10/78	
32-10-20	8	03/10/78	
32-10-20	9	03/10/78	
32-10-20	10	03/10/78	
32-10-20	11	03/10/78	
32-10-30	1	03/10/78	DOOR INSTALLATION,MAIN LANDING GEAR
32-10-30	2	03/10/78	
32-10-30	3	04/05/85	
32-10-30	4	03/10/78	
32-10-30	5	03/10/78	
32-20-01	1	03/10/78	NOSE LANDING GEAR INSTALLATION
32-20-01	2	03/10/78	
32-20-01	3	04/05/85	
32-20-05	1	04/05/85	NOSE LANDING GEAR ASSEMBLY
32-20-05	2	04/05/85	TC-1 THRU TC-1392,TC-1397 THRU TC-1401
32-20-05	3	04/05/85	TC-1403 THRU TC-1607;TE-1 THRU TE-300
32-20-05	4	04/05/85	
32-20-05	5	04/05/85	
32-20-10	1	03/10/78	NOSE LANDING GEAR ASSY
32-20-10	2	03/10/78	TC-1 THRU TC-1607,TE-1 THRU TE-300
32-20-10	3	04/05/85	
32-20-10	4	03/10/78	
32-20-10	5	04/05/85	
32-20-10	6	03/10/78	
32-20-10	7	04/05/85	
32-20-20	1	03/10/78	NOSE LANDING GEAR ASSY
32-20-20	2	03/10/78	TE-301 THRU TE-942 EXCEPT TE-938
32-20-20	3	04/05/85	
32-20-20	4	03/10/78	
32-20-20	5	04/05/85	
32-20-20	6	03/10/78	
32-20-20	7	04/05/85	

LIST OF PAGES & TABLE OF CONTENTS
FOR
CHAPTER 32-00-00 LANDING GEAR

CHAP/SUB-SECT & UNIT	PAGE NO.	EFFECTIVE DATE	TABLE OF CONTENTS
32-20-30	1	03/10/78	NOSE LANDING GEAR DOOR ASSY
32-20-30	2	03/10/78	
32-20-30	3	03/10/78	
32-30-01	1	03/10/78	MAIN LANDING GEAR RETRACT MECHANISM
32-30-01	2	03/10/78	
32-30-01	3	03/10/78	
32-30-01	4	03/10/78	
32-30-01	5	03/10/78	
32-30-01	6	03/10/78	
32-30-01	7	03/10/78	
32-30-01	8	03/10/78	
32-30-01	9	04/05/85	
32-30-10	1	03/10/78	NOSE LANDING GEAR RETRACT MECHANISM
32-30-10	2	04/05/85	
32-30-10	3	04/05/85	
32-30-10	4	03/10/78	
32-30-10	5	03/10/78	
32-30-10	6	03/10/78	
32-30-10	7	03/10/78	
32-30-20	1	03/10/78	LANDING GEAR RETRACT MOTOR AND GEARBOX
32-30-20	2	03/10/78	
32-30-20	3	03/10/78	
32-30-20	4	04/30/84	
32-30-20	5	04/05/85	
32-30-30	1	03/10/78	LANDING GEAR RETRACT MOTOR
32-30-30	2	03/10/78	
32-30-30	3	03/10/78	
32-40-01	1	03/10/78	MAIN GEAR WHEEL
32-40-01	2	03/10/78	TC-1 THRU TC-1288
32-40-01	3	03/10/78	
32-40-02	1	03/10/78	MAIN WHEEL ASSY
32-40-02	2	03/10/78	TC-1289 THRU TC-1607
32-40-02	3	03/10/78	TE-1 THRU TE-942 EXCEPT TE-938
32-40-10	1	04/05/85	NOSE GEAR WHEEL
32-40-10	2	03/10/78	
32-40-10	3	04/05/85	
32-40-20	1	03/10/78	BRAKE ASSY
32-40-20	2	03/10/78	TC-1 THRU TC-422
32-40-20	3	04/05/85	
32-40-21	1	03/10/78	BRAKE ASSY
32-40-21	2	03/10/78	TC-423 THRU TC-1288
32-40-21	3	03/10/78	
32-40-22	1	03/10/78	BRAKE ASSY
32-40-22	2	03/10/78	TC-1289 THRU TC-1607
32-40-22	3	03/10/78	TE-1 THRU TE-942 EXCEPT TE-938
32-40-30	1	03/10/78	BRAKE PLUMBING
32-40-30	2	03/10/78	TC-1 THRU TC-1221
32-40-30	3	03/10/78	TE-1 THRU TE-694
32-40-30	4	03/10/78	
32-40-30	5	03/10/78	
32-40-30	6	03/10/78	
32-40-30	7	03/10/78	
32-40-30	8	03/10/78	

LIST OF PAGES & TABLE OF CONTENTS
FOR
CHAPTER 32-00-00 LANDING GEAR

CHAP/SUB-SECT & UNIT	PAGE NO.	EFFECTIVE DATE	TABLE OF CONTENTS
32-40-30	9	04/05/85	
32-40-31	1	03/10/78	BRAKE PLUMBING
32-40-31	2	03/10/78	TC-1222 THRU TC-1607
32-40-31	3	04/05/85	TE-695 THRU TE-942 EXCEPT TE-938
32-40-31	4	03/10/78	
32-40-31	5	04/05/85	
32-40-31	6	03/10/78	
32-40-31	7	03/10/78	
32-40-40	1	03/10/78	BRAKE MASTER CYLINDER
32-40-40	2	03/10/78	TC-1 THRU TC-998
32-40-40	3	03/10/78	
32-40-41	1	03/10/78	BRAKE MASTER CYLINDER
32-40-41	2	03/10/78	TC-999 THRU TC-1607
32-40-41	3	04/05/85	TE-1 THRU TE-942 EXCEPT TE-938
32-40-50	1	03/10/78	BRAKE SHUTTLE VALVE
32-40-50	2	03/10/78	
32-40-50	3	03/10/78	
32-40-60	1	03/10/78	PARKING BRAKE VALVE
32-40-60	2	03/10/78	TC-1 THRU TC-1221,TE-1 THRU TE-694
32-40-60	3	04/30/84	
32-40-61	1	03/10/78	PARKING BRAKE VALVE
32-40-61	2	03/10/78	TC-1222 THRU TC-1607
32-40-61	3	03/10/78	TE-695 THRU TE-942 EXCEPT TE-938
32-50-01	1	03/10/78	NOSE WHEEL STEERING INSTALLATION
32-50-01	2	03/10/78	
32-50-01	3	03/10/78	
32-50-01	4	03/10/78	
32-50-01	5	03/10/78	
32-50-01	6	03/10/78	
32-50-01	7	04/05/85	
32-50-10	1	03/10/78	NOSE SHIMMY DAMPER
32-50-10	2	03/10/78	
32-50-10	3	04/05/85	
32-60-01	1	03/10/78	LANDING GEAR POSITION,SAFETY AND WARNING
32-60-01	2	03/10/78	TC-350,TC-1024 THRU TC-1607
32-60-01	3	03/10/78	TE-252 THRU TE-942 EXCEPT TE-938
32-60-01	4	03/10/78	
32-60-01	5	03/10/78	

32-10-01
MAIN LANDING GEAR INSTALLATION

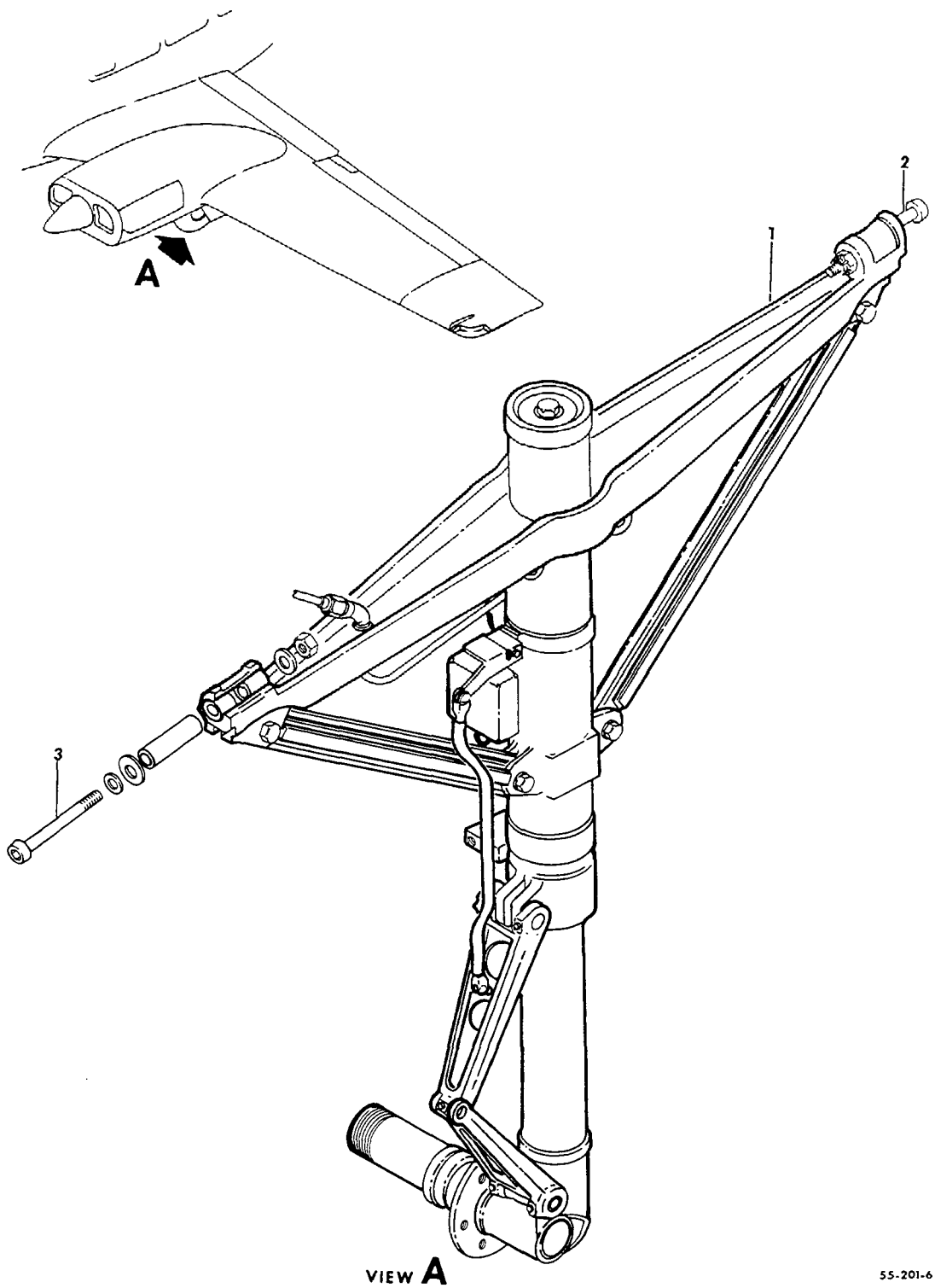

FIGURE 10-01.MAIN LANDING GEAR INSTALLATION
/SHEET 1 OF 2 SHEETS/

ATA CODE & INDEX NO.	PART NO.	DESCRIPTION 1 2 3 4 5 6 7	UNITS PER ASSY	USABLE ON CODE
10-01	95-810002-7	GEAR INSTL,LH MAIN LANDING/STANDARD/.	NP	1
	95-810002-7	GEAR INSTL,LH MAIN LANDING/OPTIONAL/.	NP	2
	95-810002-25	GEAR INSTL,LH MAIN LANDING.	NP	2
	95-810002-31	GEAR INSTL,LH MAIN LANDING.	NP	3
	95-810002-35	GEAR INSTL,LH MAIN LANDING.	NP	4
	95-810002-8	GEAR INSTL,RH MAIN LANDING/STANDARD/.	NP	1
	95-810002-8	GEAR INSTL,RH MAIN LANDING/OPTIONAL/.	NP	2
	95-810002-26	GEAR INSTL,RH MAIN LANDING.	NP	2
	95-810002-32	GEAR INSTL,RH MAIN LANDING.	NP	3
	95-810002-36	GEAR INSTL,RH MAIN LANDING.	NP	4
		NOTE FOR BREAKDOWN OF MAIN LANDING GEAR ASSY . SEE CHAPTERS 32-10-10 AND 32-10-20		
- 1	35-815196-605	. GEAR ASSY,LH MAIN LANDING	1	5
	35-815196-616	. GEAR ASSY,LH MAIN LANDING	1	6
	35-815196-691	. GEAR ASSY,LH MAIN LANDING	1	7
	95-810002-601	. GEAR ASSY,LH MAIN LANDING	1	8
	95-810002-603	. GEAR ASSY,LH MAIN LANDING	1	9
	95-810002-607	. GEAR ASSY,LH MAIN LANDING	1	10
	95-810002-617	. GEAR ASSY,LH MAIN LANDING	1	11
	95-810002-613	. GEAR ASSY,LH MAIN LANDING	1	12
	95-810002-619	. GEAR ASSY,LH MAIN LANDING	1	13
	95-810002-693	. GEAR ASSY,LH MAIN LANDING	1	8
	95-810002-651	. GEAR ASSY,LH MAIN LANDING	1	14
	95-810002-755	. GEAR ASSY,LH MAIN LANDING	1	15
	35-815196-606	. GEAR ASSY,RH MAIN LANDING	1	5
	35-815196-617	. GEAR ASSY,RH MAIN LANDING	1	6
	35-815196-692	. GEAR ASSY,RH MAIN LANDING	1	7
	95-810002-602	. GEAR ASSY,RH MAIN LANDING	1	8
	95-810002-604	. GEAR ASSY,RH MAIN LANDING	1	9
	95-810002-608	. GEAR ASSY,RH MAIN LANDING	1	10
	95-810002-618	. GEAR ASSY,RH MAIN LANDING	1	11
	95-810002-614	. GEAR ASSY,RH MAIN LANDING	1	12
	95-810002-620	. GEAR ASSY,RH MAIN LANDING	1	13
	95-810002-694	. GEAR ASSY,RH MAIN LANDING	1	8
	95-810002-652	. GEAR ASSY,RH MAIN LANDING	1	14
	95-810002-756	. GEAR ASSY,RH MAIN LANDING	1	15
		/ATTACHING PARTS/		
- 2	NAS148A50	. BOLT,AFT.	1	7
	NAS148A67/H/	. BOLT,AFT.	1	16
- 3	NAS148A52	. BOLT,FWD.	1	7
	NAS148A69/H/	. BOLT,FWD.	1	16

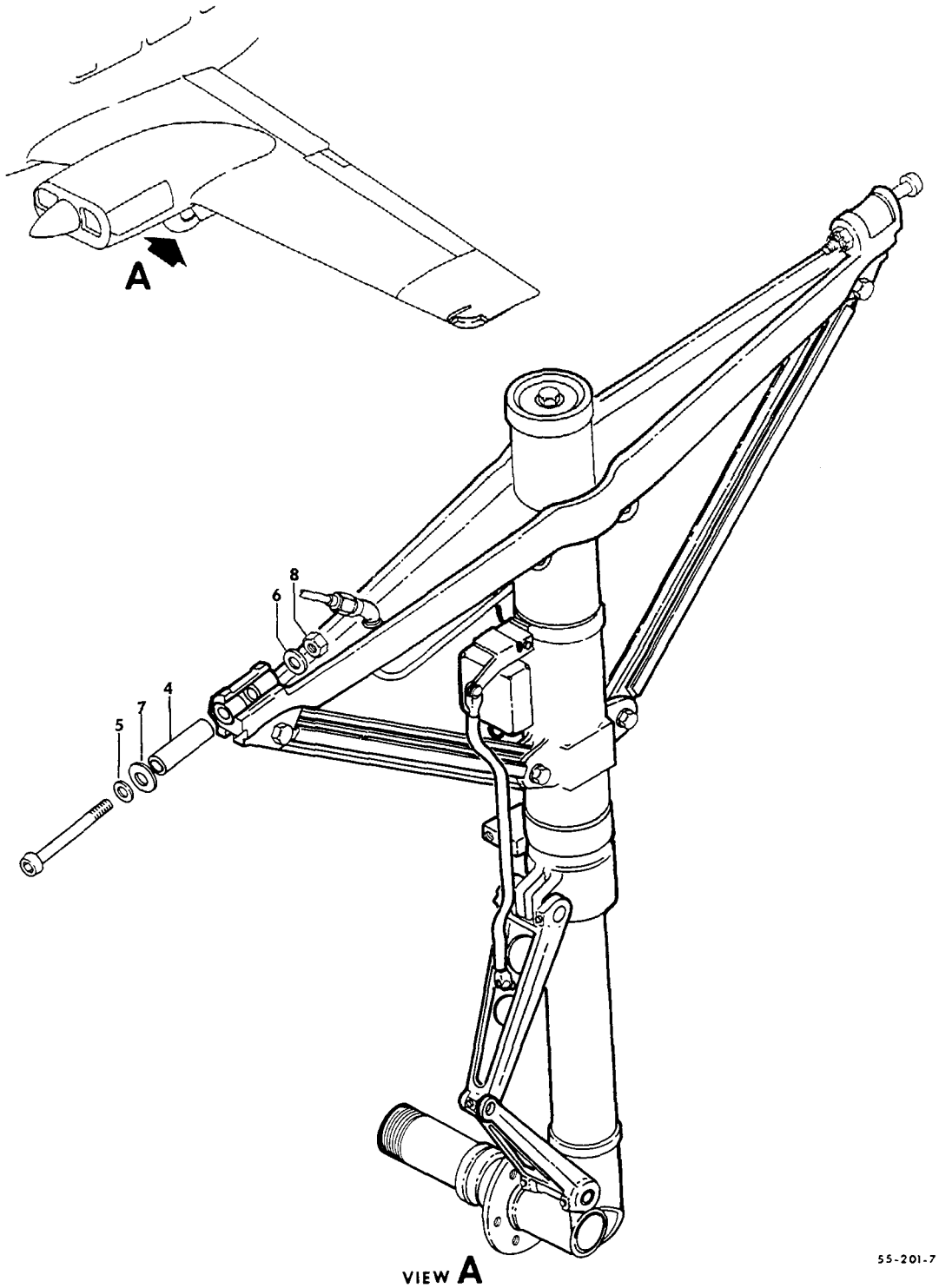

FIGURE 10-01.MAIN LANDING GEAR INSTALLATION
/SHEET 2 OF 2 SHEETS/

ATA CODE & INDEX NO.	PART NO.	DESCRIPTION 1 2 3 4 5 6 7	UNITS PER ASSY	USABLE ON CODE
		/ATTACHING PARTS/		
10-01 - 4	35-815182	. BUSHING	2	7
	35-815250	. BUSHING	2	16
- 5	NAS143-8C	. WASHER.	2	
- 6	100951X063XD	. WASHER.	2	7
	AN960-816	. WASHER.	2	16
- 7	100951S016XF	. WASHER/USED BETWEEN GEAR & SPAR FITTING . . . IF GAP IS 0.016 TO 0.031/	2	
	100951S032XF	. WASHER/USED BETWEEN GEAR & SPAR FITTING . . . IF GAP IS 0.032 TO 0.047/	2	
- 8	AN310-8	. NUT	2	
	AN380-3-3	. PIN,COTTER.	2	

CODES OF EFFECTIVITY

1	TC-1 THRU TC-849 EXCEPT TC-350	2	TC-1002 AND TC-850 THRU TC-998 EXCEPT TC-663,TC-979 AND TC-984
3	TC-663,TC-979,TC-984 TC-999 THRU TC-1607 EXCEPT TC-1002	4	TC-350 AND TE-1 THRU TE-942 EXCEPT TE-938
5	TC-1 THRU TC-99	6	TC-100 THRU TC-354 EXCEPT TC-251,TC-344
7	TC-1 THRU TC-354 EXCEPT TC-251,TC-344	8	TC-251,TC-344 AND TC-355 THRU TC-422
9	TC-423 THRU TC-849	10	TC-850 THRU TC-1010
11	TC-1011 THRU TC-1607 TE-1 THRU TE-167	12	TC-1289 THRU TC-1607 TE-1 THRU TE-167
13	TE-168 THRU TE-942 EXCEPT TE-938	14	TC-423 THRU TC-1010
15	TC-1011 THRU TC-1607	16	TC-251,TC-344 AND TC-355 THRU TC-1607 TE-1 THRU TE-942 EXCEPT TE-938

"END"

32-10-10
MAIN LANDING GEAR ASSEMBLY
TC-1 THRU TC-354 EXCEPT TC-251 & TC-344

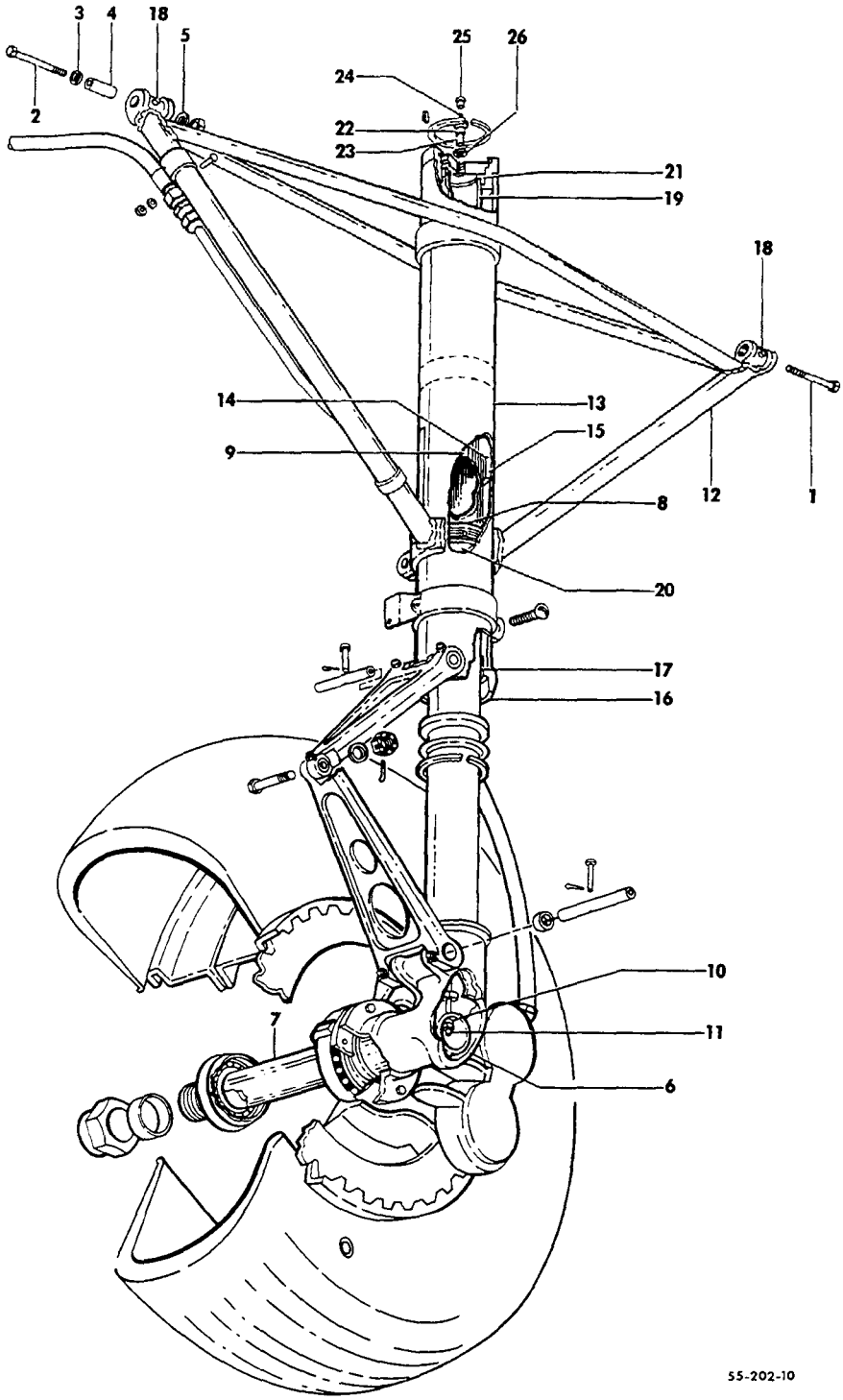

FIGURE 10-10.MAIN LANDING GEAR ASSEMBLY
/SHEET 1 OF 4 SHEETS/

SUB-SECT UNIT & ITEM NO.	PART NO.	DESCRIPTION 1 2 3 4 5 6 7	UNITS PER ASSY	USABLE ON CODE
10-10	35-815196-605	GEAR ASSY,LH MAIN LANDING/COMPLETE/	1	1
	35-815196-616	GEAR ASSY,LH MAIN LANDING/COMPLETE/	1	2
	35-815196-691	GEAR ASSY,LH MAIN LANDING /LESS TIRE,WHEEL & BRAKE/	1	3
	35-815196-606	GEAR ASSY,RH MAIN LANDING/COMPLETE/	1	1
	35-815196-617	GEAR ASSY,RH MAIN LANDING/COMPLETE/	1	2
	35-815196-692	GEAR ASSY,RH MAIN LANDING /LESS TIRE,WHEEL & BRAKE/ /ATTACHING PARTS/	1	3
- 1	NAS148A50	BOLT,AFT.	1	
- 2	NAS148A52	BOLT,FWD.	1	
- 3	R NAS143-8C	WASHER.	2	
- 4	35-815182	BUSHING	2	
- 5	100951X063XD	WASHER.	2	
	AN310-8	NUT	2	
	AN380-3-3	PIN,COTTER.	2	
	35-815192-5	. SHOCK ASSY,LOWER LH	1	3
	35-815192-6	. SHOCK ASSY,LOWER RH	1	3
	35-815192-25	. . SOCKET ASSY,AXLE LH	1	3
	35-815192-26	. . SOCKET ASSY,AXLE RH	1	3
- 6	35-815197-1	. . . SOCKET,LH AXLE.	1	3
	35-815197-2	. . . SOCKET,RH AXLE.	1	3
- 7	35-815022	. . . AXLE.	1	3
	35-815192-27	. . PISTON ASSY,LOWER SHOCK	1	3
- 8	35-815192-11	. . . PLUG.	1	3
- 9	35-815192-15	. . . TUBE.	1	3
	AN5-11	. . . BOLT.	1	3
- 10	35-815081	. . . WASHER.	1	3
- 11	AN365-524	. . . NUT	1	3
	35-815192-3	. SHOCK ASSY,UPPER LH	1	3
	35-815192-4	. SHOCK ASSY,UPPER RH	1	3
- 12	95-810010-7	. . TRUSS ASSY,LH	1	3
	95-810010-8	. . TRUSS ASSY,RH	1	3
	35-815192-601	. . BARREL ASSY,UPPER SHOCK	1	3
- 13	35-815192-23	. . . TUBE,UPPER SHOCK.	1	3
	45-815215	. . . BEARING ASSY,UPPER SHOCK BARREL	1	3
- 14	45-815215-2	. . . . TUBE.	1	3
- 15	45-815215-4	. . . . BUSHING,UNDIVIDED	1	3
- 16	45-815230	. . . FITTING,BEARING	1	3
- 17	45-815231	. . . BEARING,PISTON.	1	3
- 18	MS15002-3	. . FITTING,ZERK.	2	3
	35-815192-41	. TUBE ASSY,ORIFICE	1	3
- 19	35-815192-17	. . TUBE,ORIFICE.	1	3
- 20	35-815192-37	. . HEAD,ORIFICE.	1	3
- 21	35-815192-21	. . CAP,ORIFICE	1	3
	35-815088-18	. BODY ASSY,AIR VALVE	1	4
	118642-3	. BODY ASSY,AIR VALVE	1	5
- 22	35-815088-4	. . BODY,AIR VALVE.	1	4
- 23	35-815088-16	. . TUBE,AIR VALVE.	1	4
- 24	302D	. CORE/SUPERSEDES AN809-1/.	1	3
- 25	AN813-1A	. CAP	1	4
	MS20813-1	. CAP	1	5
- 26	AN6290-5	. GASKET.	1	4
	MS28778-5	. GASKET.	1	5

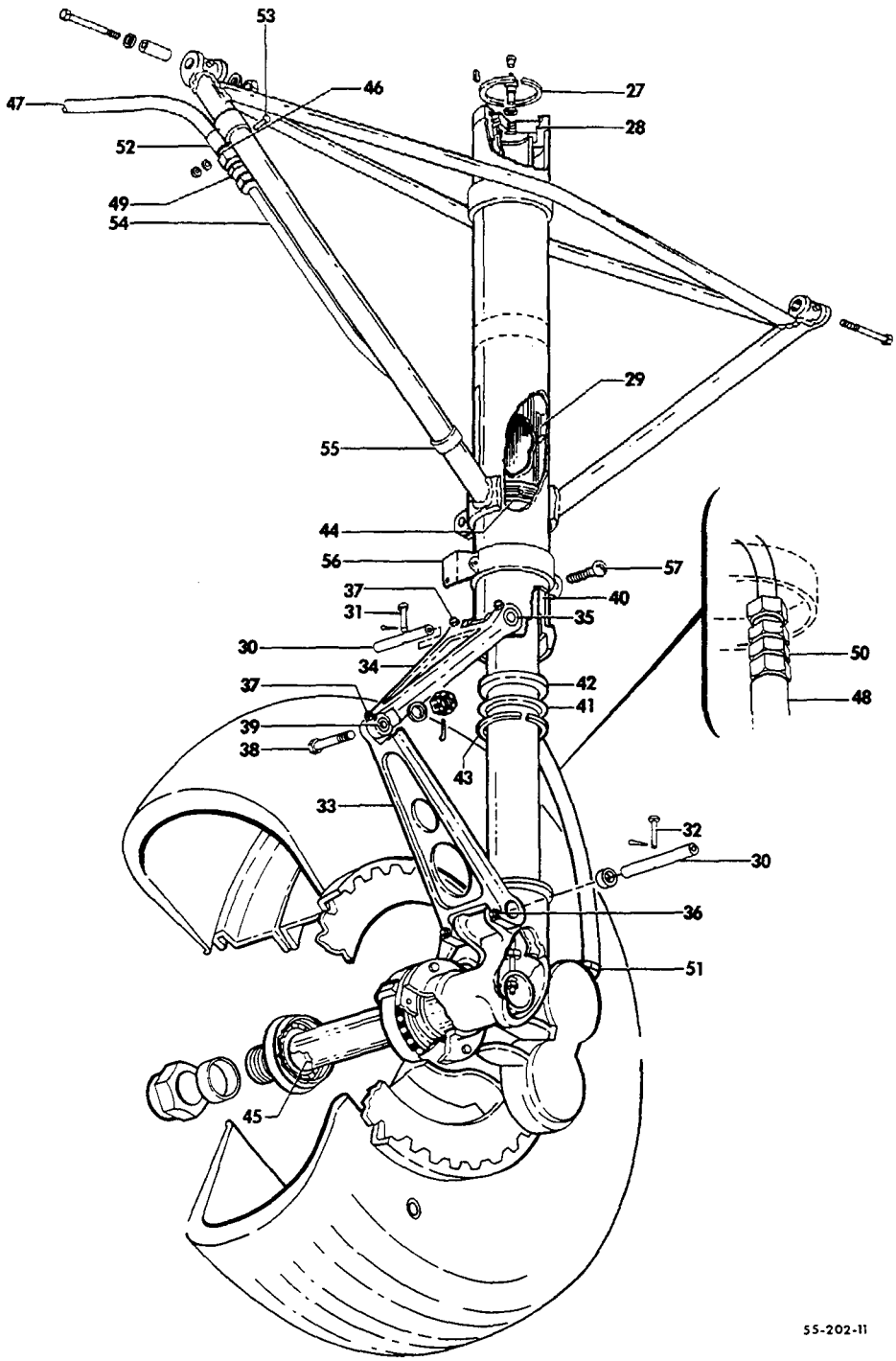

FIGURE 10-10.MAIN LANDING GEAR ASSEMBLY
/SHEET 2 OF 4 SHEETS/

ATA CODE & INDEX NO.	PART NO.	DESCRIPTION 1 2 3 4 5 6 7	UNITS PER ASSY	USABLE ON CODE
10-10 - 27	NAS50-262	. RING,SNAP	1	3
- 28	AN6230-7	. GASKET	1	3
- 29	AN6227-31	. PACKING	1	3
	35-815194	. KNEE ASSY,TORQUE LOWER	1	3
	45-815011-6	. KNEE ASSY,TORQUE UPPER	1	3
		/ATTACHING PARTS/		
- 30	45-815237	. PIN,CLEVIS	2	
- 31	AN392-27	. PIN	1	
- 32	AN392-23	. PIN	1	
		——+——		
	AN380-2-1	. PIN,COTTER	2	
- 33	35-815194-1	. . KNEE,LOWER	1	3
- 34	45-815011-4	. . KNEE,UPPER	1	6
	45-815011-8	. . KNEE,UPPER	1	7
- 35	45-815013	. . BUSHING	2	3
- 36	MS15002-1	. . FITTING,LOWER KNEE	2	3
- 37	1729	. . FITTING,UPPER KNEE	3	3
- 38	AN5-13	. BOLT	1	3
- 39	105739S-YK0431	. BUSHING	1	3
	AN960-516	. WASHER	1	3
	AN310-5	. NUT	1	3
	AN380-2-3	. PIN,COTTER	1	3
- 40	35-810150-2	. FELT,SHOCK ABSORBER	1	3
- 41	MS28776-20	. SCRAPER	1	3
- 42	45-815232	. ADAPTER,PISTON SCRAPER	1	3
- 43	111200-6	. RING,SNAP	1	3
- 44	35-380020-1	. RING,PISTON	1	3
- 45	16XXXX	. CORK	1	3
- 46	35-815001-8	. SHIM	1	3
- 47	MS28741-4-0125	. HOSE ASSY	1	3
- 48	MS28741-4-0153	. HOSE ASSY	1	3
- 49	AN815-4D	. UNION	1	3
- 50	AN919-6D	. UNION	1	3
- 51	AN6290-6	. GASKET	1	3
- 52	35-815038	. CLAMP ASSY,BRAKE LINE	1	3
		/ATTACHING PARTS/		
- 53	AN4-7	. BOLT	1	
	AN960-416	. WASHER	1	
	AN365-428	. NUT	1	
		——+——		
- 54	35-815043	. TUBE ASSY,HYDRAULIC BRAKE TRUSS LH	1	3
	35-815044	. TUBE ASSY,HYDRAULIC BRAKE TRUSS RH	1	3
- 55	MS21919-6	. CLAMP	1	3
	AN742-15	. CLAMP	1	4
	AN742-14	. CLAMP	1	5
	AN3-4A	. BOLT	1	3
	AN960-10	. WASHER	1	3
	AN365-1032	. NUT	1	3
- 56	35-815004	. CLAMP ASSY,MAIN GEAR DOOR LH	1	3
	35-815004-1	. CLAMP ASSY,MAIN GEAR DOOR RH	1	3
		/ATTACHING PARTS/		
- 57	AN4-10A	. BOLT	1	
	AN960-416	. WASHER	1	
	AN365-428	. NUT	1	
		——+——		

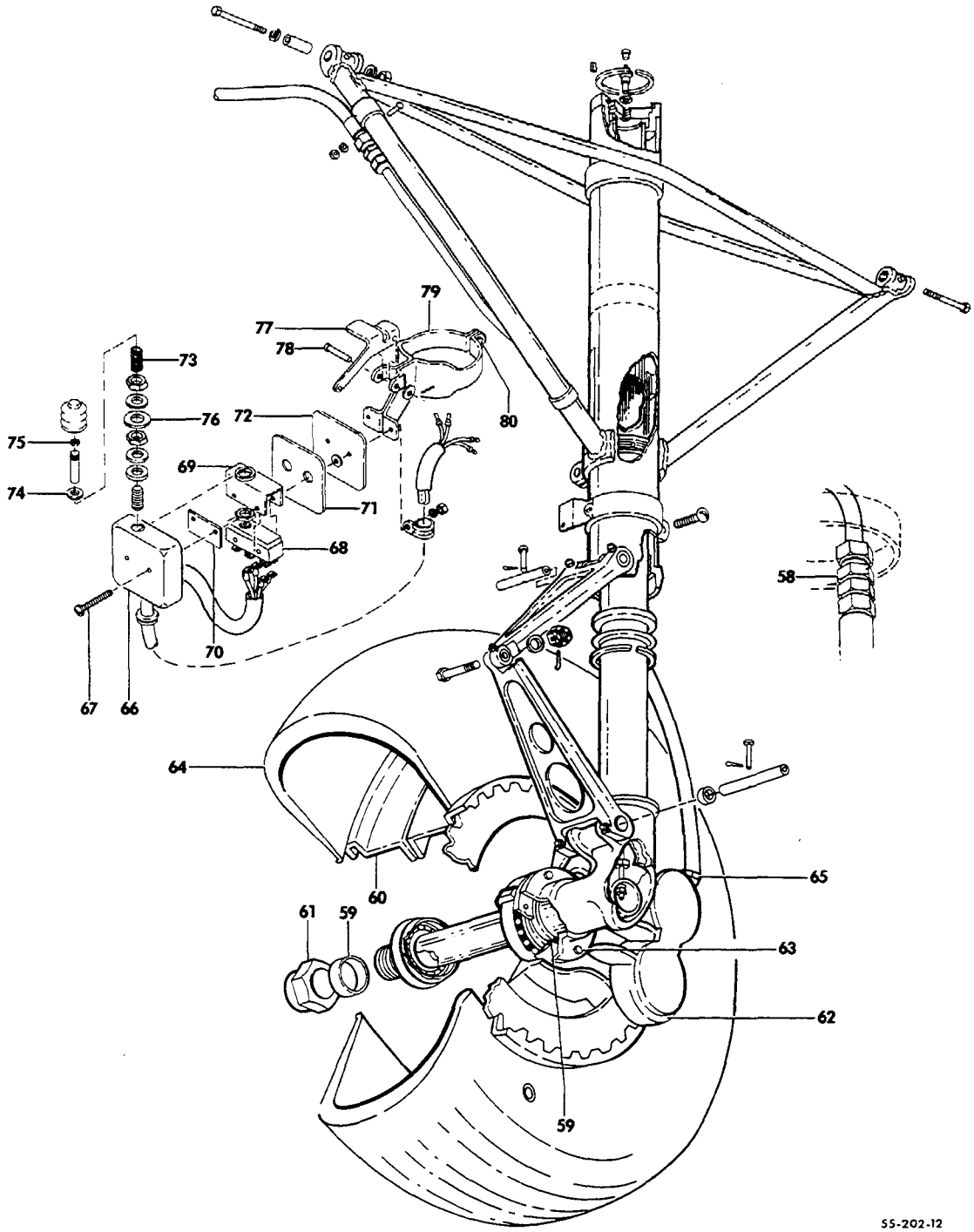

FIGURE 10-10.MAIN LANDING GEAR ASSEMBLY
/SHEET 3 OF 4 SHEETS/

ATA CODE & INDEX NO.	PART NO.	DESCRIPTION 1 2 3 4 5 6 7	UNITS PER ASSY	USABLE ON CODE
10-10 - 58	AN832-4D	UNION	1	3
	AN960-716	WASHER	1	3
	AN924-4	NUT	1	3
	AN6290-6	GASKET	1	3
- 59	35-815023	BUSHING,WHEEL SPACER	2	3
	35-815196-15	WHEEL ASSY,BALANCED	1	1
	35-815196-25	WHEEL ASSY,BALANCED	1	2
- 60	96-300001-3	WHEEL ASSY,MAIN GEAR/SEE CHAPTER 32-40-01/ /ATTACHING PARTS/	1	3
- 61	AN7502-24	NUT	1	
	AN380-4-8	PIN,COTTER	1	
- 62	95-32412	BRAKE ASSY,MAIN GEAR/SEE CHAPTER 32-40-20/	1	1
	95-32679	BRAKE ASSY,MAIN GEAR/SEE CHAPTER 32-40-20/	1	2
	96-300001-5	BRAKE ASSY,NEW MAIN GEAR/SEE CHAPTER 32-40-21/	1	3
	105739X-XZ0355	BUSHING/USE TO CONVERT FROM 95-32412 AND 95-32679 TO 96-300001-5 BRAKE ASSY/ /ATTACHING PARTS/	1	3
- 63	AN4-10A	BOLT	6	
	AN960-416	WASHER	6	
	AN365-428	NUT	6	
- 64	6.50 X 8 6P TL	TIRE,6 PLY TUBELESS	1	3
- 65	AN919-6D	UNION	1	3
	95-361014	SWITCH ASSY,LANDING GEAR SAFETY	1	3
- 66	35-361135-1	BOX,SAFETY SWITCH /ATTACHING PARTS/	1	3
- 67	AN526-632-22	SCREW	2	
	AN960D6	WASHER	4	
	AN365-632	NUT	2	
- 68	MS25026-1	SWITCH/SUPERSEDES AN3210-1/	1	3
- 69	MC2711	ACTUATOR	1	3
- 70	45-364238	INSULATOR,SWITCH	1	3
- 71	35-361136	GASKET	1	3
- 72	35-361134	COVER	1	3
	AN960A816L	WASHER	2	3
- 73	35-361150	SPRING,PLUNGER	1	3
- 74	100951DD032YF	WASHER	1	3
- 75	NAS51-31	RING,SNAP	1	3
- 76	35-361153	WASHER,SWITCH ACTUATOR	1	3
- 77	35-361132-1	ARM,SWITCH /ATTACHING PARTS/	1	3
- 78	AN393-29	PIN	1	
	AN380-2-1	PIN,COTTER	1	
- 79	35-361133	BRACKET ASSY,LANDING GEAR SAFETY SWITCH /ATTACHING PARTS/	1	3
- 80	AN3-5A	BOLT	1	
	AN960D10	WASHER	1	
	AN365-1032	NUT	1	

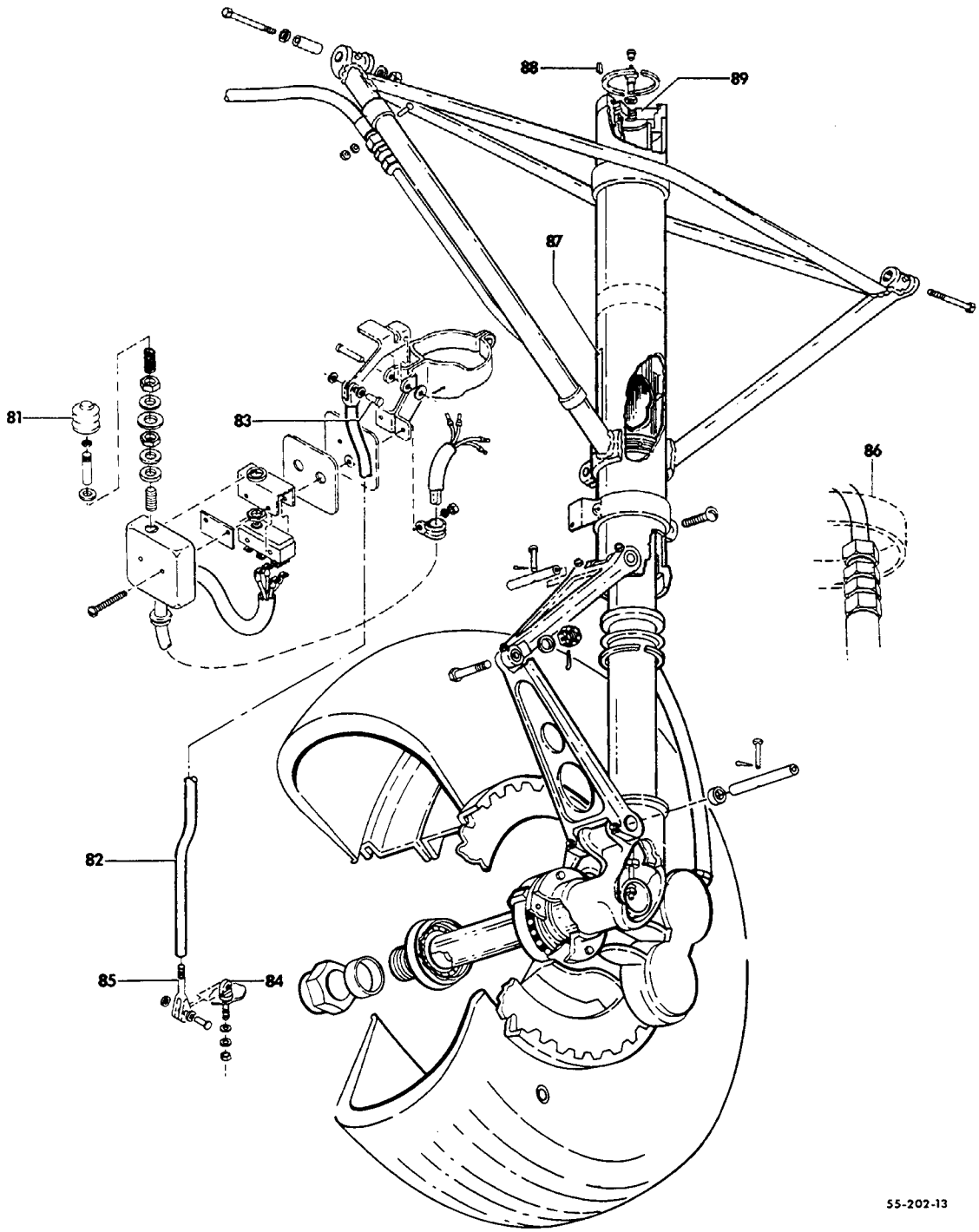

FIGURE 10-10.MAIN LANDING GEAR ASSEMBLY
/SHEET 4 OF 4 SHEETS/

ATA CODE & INDEX NO.	PART NO.	DESCRIPTION 1 2 3 4 5 6 7	UNITS PER ASSY	USABLE ON CODE
10-10	35-361133-2	. . . BRACKET	1	3
	35-361133-3	. . . BRACKET	1	3
	AN931-3-10	. . GROMMET	1	3
	AN742-6C	. . CLAMP	1	3
- 81	35-361148-1	. . BOOT	1	3
- 82	35-361145	. LINK ASSY,SAFETY SWITCH	1	3
		/ATTACHING PARTS/		
- 83	AN393-13	. PIN	2	
	AN960D10	. WASHER	4	
	AN380-2-1	. PIN,COTTER	2	
- 84	AN42-4	. BOLT,EYE	1	3
- 85	AN161-16RS	. FORK	1	3
	MS21919DG8	. CLAMP/RH ONLY/	4	3
- 86	35-815264-1	. CLAMP,LH BRAKE LINE	1	3
	35-815264-2	. CLAMP,RH BRAKE LINE	1	3
- 87	96-810010	PLATE,LH MAIN LANDING GEAR SHOCK INSTRUCTIONS	1	3
	96-810011	PLATE,RH MAIN LANDING GEAR SHOCK INSTRUCTIONS	1	3
- 88	45-815225	LOCK,MAIN LANDING GEAR BARREL END	2	3
- 89	45-815224	PLUG,MAIN LANDING GEAR BARREL END	2	3

CODES OF EFFECTIVITY

1	TC-1 THRU TC-99	2	TC-100 THRU TC-354 EXCEPT TC-251 & TC-344
3	TC-1 THRU TC-354 EXCEPT TC-251 & TC-344	4	TC-1 THRU TC-200
5	TC-201 THRU TC-354 EXCEPT TC-251 & TC-344	6	TC-1 THRU TC-339
7	TC-340 THRU TC-354		

"END"

32-10-20
MAIN LANDING GEAR ASSEMBLY
TC-251,TC-344,TC-355 THRU TC-1607
TE-1 THRU TE-942 EXCEPT TE-938

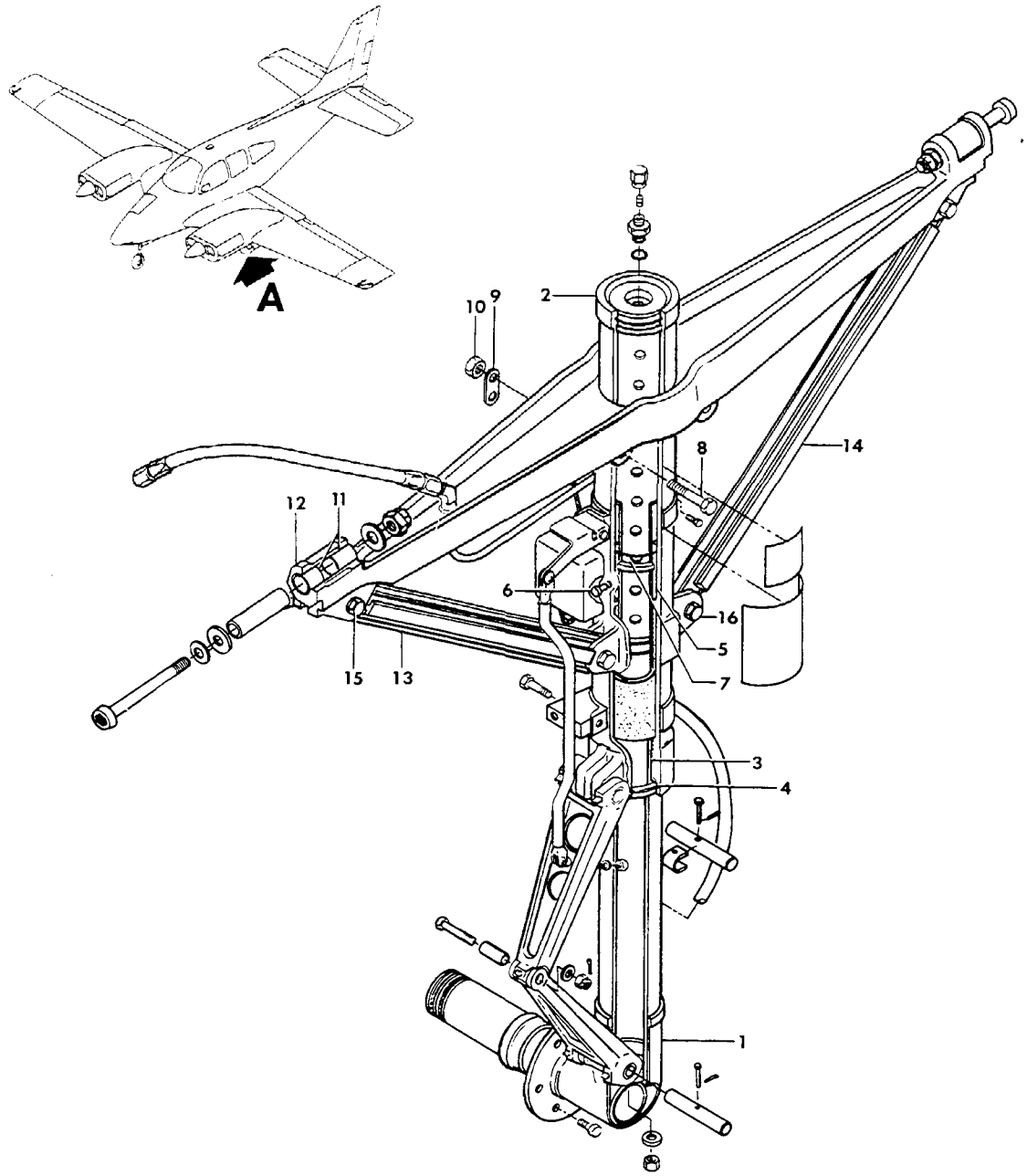

VIEW A

55-202-15

FIGURE 10-20.MAIN LANDING GEAR ASSY
/SHEET 1 OF 5 SHEETS/

ATA CODE & INDEX NO.	PART NO.	DESCRIPTION 1 2 3 4 5 6 7	UNITS PER ASSY	USABLE ON CODE
10-20	95-810002-601	GEAR ASSY,LH MAIN LANDING/COMPLETE/	1	1
	95-810002-603	GEAR ASSY,LH MAIN LANDING/COMPLETE/	1	2
	95-810002-607	GEAR ASSY,LH MAIN LANDING/COMPLETE/	1	3
	95-810002-617	GEAR ASSY,LH MAIN LANDING/COMPLETE/	1	4
	95-810002-613	GEAR ASSY,LH MAIN LANDING/COMPLETE/	1	5
	95-810002-619	GEAR ASSY,LH MAIN LANDING/COMPLETE/	1	6
	95-810002-693	GEAR ASSY,LH MAIN LANDING . . . . . /LESS TIRE,WHEEL & BRAKE/	1	1
	95-810002-651	GEAR ASSY,LH MAIN LANDING . . . . . /LESS TIRE,WHEEL & BRAKE/	1	7
	95-810002-755	GEAR ASSY,LH MAIN LANDING . . . . . /LESS TIRE,WHEEL & BRAKE/	1	8
	95-810002-602	GEAR ASSY,RH MAIN LANDING/COMPLETE/	1	1
	95-810002-604	GEAR ASSY,RH MAIN LANDING/COMPLETE/	1	2
	95-810002-608	GEAR ASSY,RH MAIN LANDING/COMPLETE/	1	3
	95-810002-618	GEAR ASSY,RH MAIN LANDING/COMPLETE/	1	4
	95-810002-614	GEAR ASSY,RH MAIN LANDING/COMPLETE/	1	5
	95-810002-620	GEAR ASSY,RH MAIN LANDING/COMPLETE/	1	6
	95-810002-694	GEAR ASSY,RH MAIN LANDING . . . . . /LESS TIRE,WHEEL & BRAKE/	1	1
	95-810002-652	GEAR ASSY,RH MAIN LANDING . . . . . /LESS TIRE,WHEEL & BRAKE/	1	7
	95-810002-756	GEAR ASSY,RH MAIN LANDING . . . . . /LESS TIRE,WHEEL & BRAKE/	1	8
	35-815192-5	. SHOCK ASSY,LOWER LH	1	1
- 1	35-815260-1	. SHOCK ASSY,LOWER LH/SUPERSEDES 35-815192-45/.	1	9
	35-815260-3	. SHOCK ASSY,LOWER LH	1	6
	35-815192-6	. SHOCK ASSY,LOWER RH	1	1
	35-815260-2	. SHOCK ASSY,LOWER RH/SUPERSEDES 35-815192-46/.	1	9
	35-815260-4	. SHOCK ASSY,LOWER RH	1	6
	35-815246-5	. CYLINDER ASSY,LH.	1	10
	35-815246-7	. CYLINDER ASSY,RH.	1	10
- 2	35-815246-1	. . CYLINDER,LH	1	10
	35-815246-3	. . CYLINDER,RH	1	10
- 3	35-815246-9	. . BEARING	1	10
- 4	RRN-237C	. . RING,RETAINING.	1	10
- 5	35-815246-11	. . BEARING	1	11
	35-815246-13	. . BEARING	1	12
- 6	SALP-T6-6	. . HUCKBOLT.	2	10
	6LC-C6	. . COLLAR,HUCKBOLT	2	10
- 7	MS28775-138	. . O RING.	1	10
- 8	NAS334CPA30	. BOLT.	2	10
- 9	35-815256	. CONNECTOR,BRACE TO CLAMP.	2	10
- 10	MS20365-428	. NUT	2	10
	35-815251-1	. BRACE ASSY,MAIN LANDING GEAR UPPER.	1	10
- 11	10DU12	. . BUSHING	4	10
- 12	35-815251-3	. . BRACE	1	10
- 13	35-815252-1	. COLUMN,FWD.	1	10
- 14	35-815252-3	. COLUMN,AFT. . . . . /ATTACHING PARTS/	1	10
- 15	NAS464P7LA16/M/	. BOLT.	2	
- 16	35-815247-15	. BOLT.	2	
	AN960D716	. WASHER.	4	
	MS20364-720	. NUT	4	

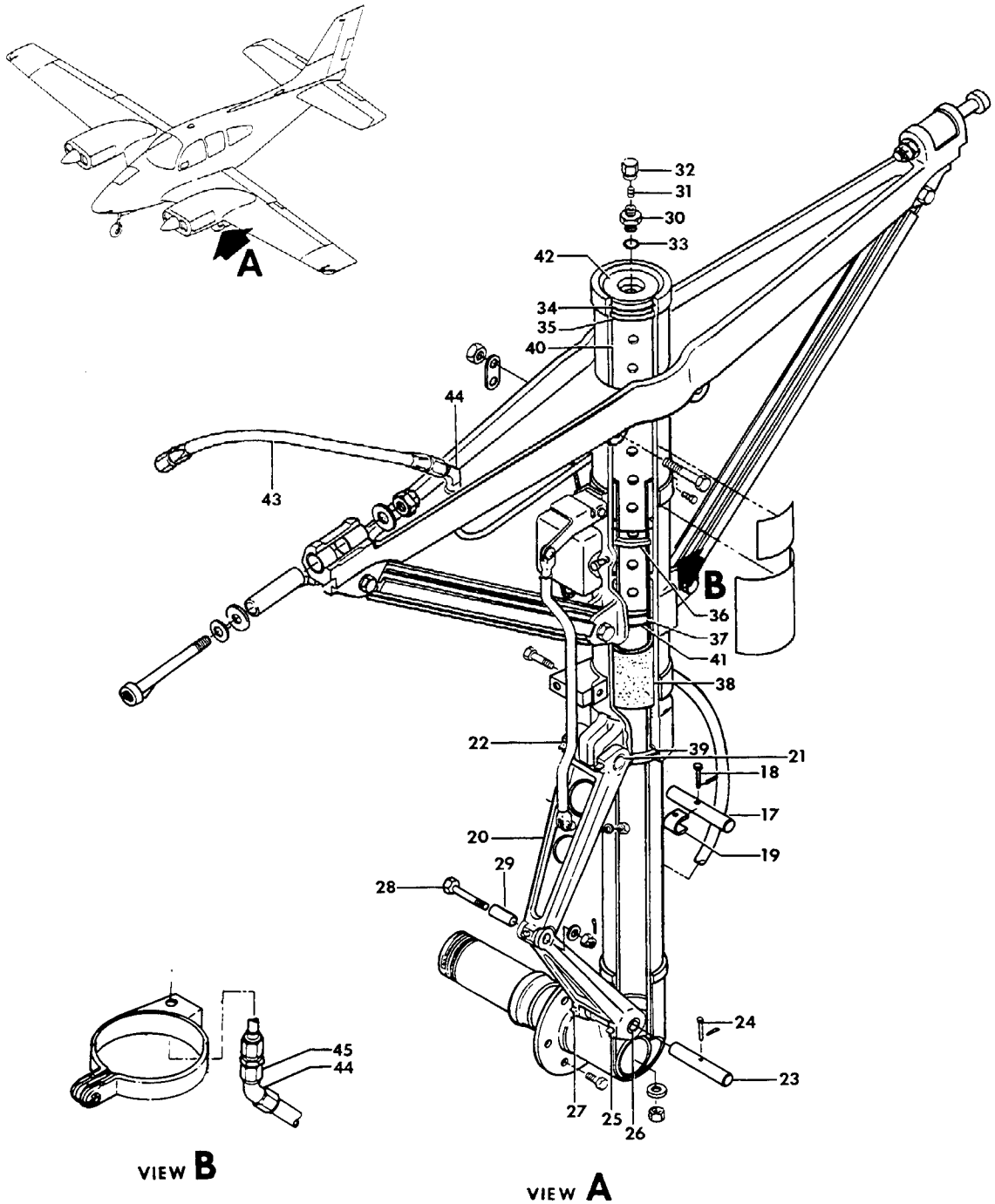

FIGURE 10-20.MAIN LANDING GEAR ASSY
/SHEET 2 OF 5 SHEETS/

ATA CODE & INDEX NO.	PART NO.	DESCRIPTION 1 2 3 4 5 6 7	UNITS PER ASSY	USABLE ON CODE
10-20	45-815011-10	KNEE ASSY,UPPER	1	10
		/ATTACHING PARTS/		
- 17	45-815237	PIN	1	
- 18	MS20392-1-21	PIN	1	
	MS24665-130	PIN,COTTER/SUPERSEDES AN380-2-1/	1	
- 19	35-815253	STOP	1	
		——*——		
- 20	45-815011-8	KNEE,UPPER	1	10
- 21	45-815013	BUSHING	2	10
- 22	1729	FITTING,ZERK	3	10
	35-815194	KNEE ASSY,LOWER TORQUE	1	13
	35-815194-3	KNEE ASSY,LOWER TORQUE	1	14
	35-815194-9	KNEE ASSY,LOWER TORQUE/USED WITH GOODYEAR BRAKES/	1	15
	35-815194-13	KNEE ASSY,LOWER TORQUE/USED WITH CLEVELAND BRAKES/	1	10
		/ATTACHING PARTS/		
- 23	45-815237	PIN	1	
- 24	AN392-27	PIN/SUPERSEDES MS20392-1-27/	1	
	MS24665-130	PIN,COTTER/SUPERSEDES AN380-2-1/	1	
		——*——		
- 25	35-815194-1	KNEE,LOWER	1	13
	35-815194-5	KNEE,LOWER	1	14
	35-815194-7	KNEE,LOWER	1	15
	35-815194-11	KNEE,LOWER	1	10
- 26	45-815013	BUSHING	2	10
- 27	MS15002-1	FITTING,ZERK	2	10
- 28	AN5-13/M/	BOLT	1	10
- 29	105739S-YK0431	BUSHING	1	10
	AN960-516	WASHER	1	10
	AN310-5	NUT	1	10
	AN380-2-3	PIN,COTTER	1	10
- 30	118642-7	BODY,AIR VALVE	1	10
- 31	302D	CORE,AIR VALVE	1	10
- 32	MS20813-1	CAP	1	10
- 33	MS28778-5	GASKET	1	10
- 34	RRN237C	RING,RETAINING	1	10
- 35	AN623085	GASKET	1	10
- 36	AN6227B31	PACKING	1	10
- 37	35-380020-1	RING,PISTON	1	10
- 38	35-815247-9	FELT	1	10
- 39	504271	SEAL,SCRAPER	1	10
	35-815249-1	BRAZE ASSY,ORIFICE	1	16
	35-815249-3	BRAZE ASSY,ORIFICE	1	17
- 40	35-815192-17	TUBE	1	10
- 41	35-815192-37	HEAD,ORIFICE	1	16
	96-810017	HEAD,ORIFICE	1	17
- 42	35-815245-1	CAP	1	10
	111503-1331A	RING,LOWER BRAZE	1	10
	111503-1540A	RING,UPPER BRAZE	1	10
- 43	MS28741-4-0170	HOSE ASSY,UPPER	1	10
- 44	AN837-4D	ELBOW	2	10
- 45	AN960D716	WASHER	3	10
	AN924-4D	NUT	2	10

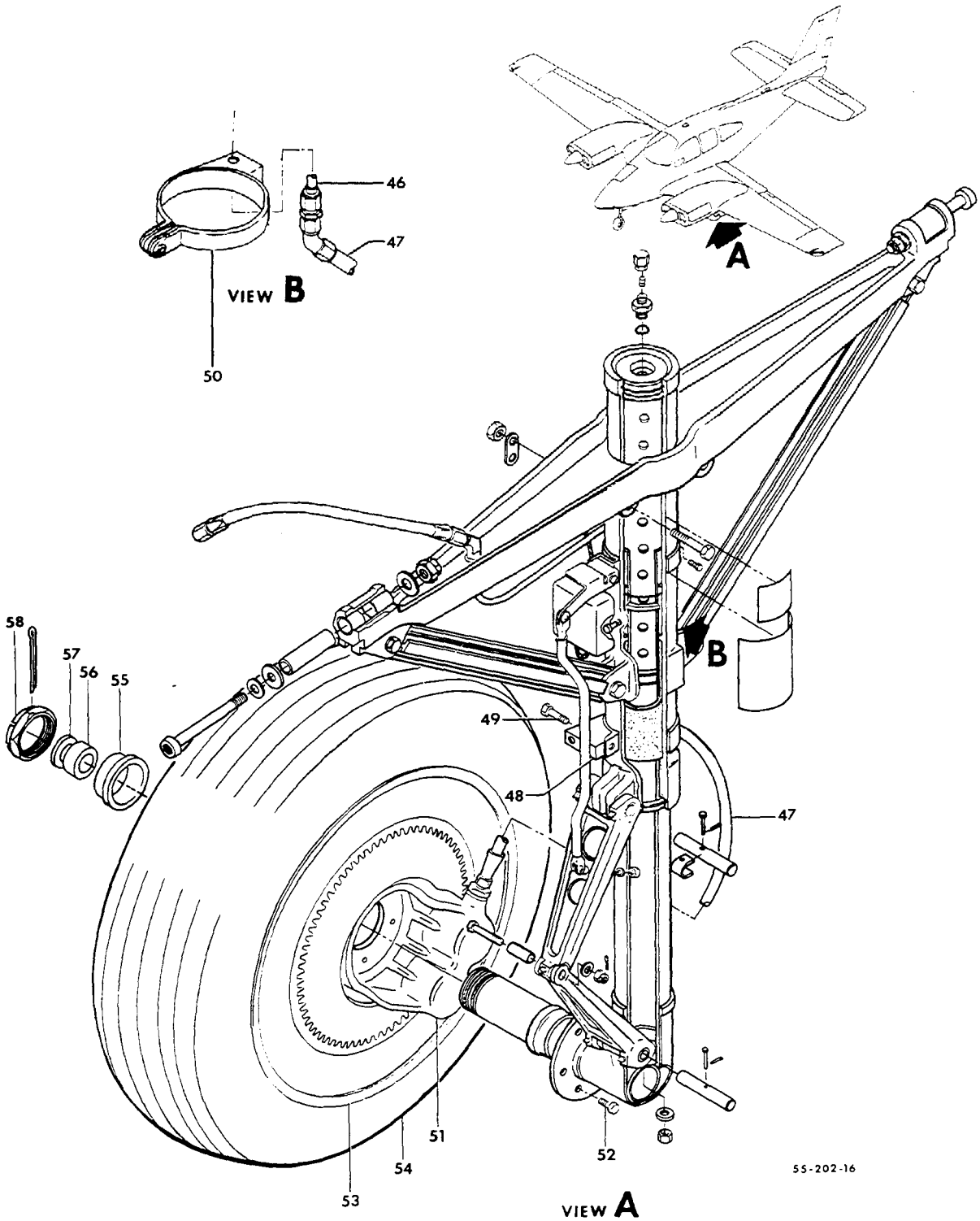

FIGURE 10-20.MAIN LANDING GEAR ASSY
/SHEET 3 OF 5 SHEETS

ATA CODE & INDEX NO.	PART NO.	DESCRIPTION 1 2 3 4 5 6 7	UNITS PER ASSY	USABLE ON CODE
10-20 - 46	95-810002-3	. TUBE ASSY,LH.	1	16
	95-810002-37	. TUBE ASSY,LH.	1	17
	95-810002-4	. TUBE ASSY,RH.	1	16
	95-810002-38	. TUBE ASSY,RH.	1	17
- 47	MS28741-4-0140	. HOSE ASSY,LOWER	1	18
	MS28741-4-0160	. HOSE ASSY,LOWER	1	19
- 48	35-815004	. CLAMP ASSY,LH LANDING GEAR DOOR ATTACHING . .	1	10
	35-815004-1	. CLAMP ASSY,RH LANDING GEAR DOOR ATTACHING . .	1	10
		/ATTACHING PARTS/		
- 49	AN4-14A/M/	. BOLT.	1	
	AN960-416	. WASHER.	1	
	MS20365-428	. NUT	1	
		——*——		
- 50	35-815264-1	. CLAMP ASSY,LH LOWER BRAKE HOSE ATTACHMENT . .	1	10
	35-815264-2	. CLAMP ASSY,RH LOWER BRAKE HOSE ATTACHMENT . .	1	10
		/ATTACHING PARTS/		
	AN4-14/M/	. BOLT.	1	
	AN960-416	. WASHER.	1	
	MS20365-428	. NUT	1	
		——*——		
	35-815196-25	. WHEEL & TIRE ASSY,BALANCED/SIDEWALL	1	1
		INFLATED TUBELESS TIRE/		
	95-810002-17	. WHEEL & BRAKE ASSY/SIDEWALL INFLATED.	1	20
		TUBELESS TIRE/		
	95-810002-29	. WHEEL & BRAKE ASSY/TUBE TYPE TIRE/.	1	20
	95-810002-33	. TIRE,WHEEL & BRAKE ASSY,TUBE TYPE/BALANCED/ .	1	21
- 51	95-32679	. . BRAKE ASSY/SEE CHAPTER 32-40-20/.	1	1
	96-300001-5	. . BRAKE ASSY/SEE CHAPTER 32-40-21/.	1	20
	30-66	. . BRAKE ASSY/SEE CHAPTER 32-40-22/.	1	21
		/ATTACHING PARTS/		
- 52	AN4-10A/M/	. . BOLT.	6	1
	NAS1305-10	. . BOLT.	5	22
	AN960-416	. . WASHER.	6	1
	AN960-516	. . WASHER.	5	22
	MS20365-428	. . NUT	6	1
	MS20365-524	. . NUT	5	22
		——*——		
	95-810002-11	. . WHEEL & TIRE ASSY,BALANCED/SIDEWALL	1	23
		INFLATED TUBELESS TIRE/		
	95-810002-27	. . WHEEL & TIRE ASSY,BALANCED/TUBE TYPE TIRE/.	1	23
	95-810002-39	. . WHEEL & TIRE ASSY,BALANCED/TUBE TYPE TIRE/.	1	21
- 53	96-300001-3	. . . WHEEL ASSY,SIDEWALL INFLATED TUBELESS . .	1	23
		TIRE/SUPERSEDES 95-32135,		
		SEE CHAPTER 32-40-01/		
	96-300001-51	. . . WHEEL ASSY,TUBE TYPE TIRE/SEE	1	23
		CHAPTER 32-40-01/		
	40-98	. . . WHEEL ASSY,TUBE TYPE TIRE/SEE	1	21
		CHAPTER 32-40-02/		
- 54	6.50X8 6P TL	. . . TIRE,6 PLY SIDEWALL INFLATED TUBELESS . .	1	23
	6.50X8 6P TT	. . . TIRE,6 PLY TUBE TYPE.	1	23
	6.50X8 8P TT	. . . TIRE,8 PLY TUBE TYPE.	1	21
	6.50X8	. . . TUBE.	1	
- 55	35-815023	. . BUSHING/BRAKE SIDE ONLY/.	1	18
	35-815023-1	. . BUSHING/BRAKE SIDE ONLY/.	1	19
- 56	95-810002-13	. . BUSHING	1	10
- 57	100951X100WL	. . WASHER.	1	10
- 58	AN7502-24	. . NUT	1	10
	AN380-4-8	. . PIN,COTTER.	1	10

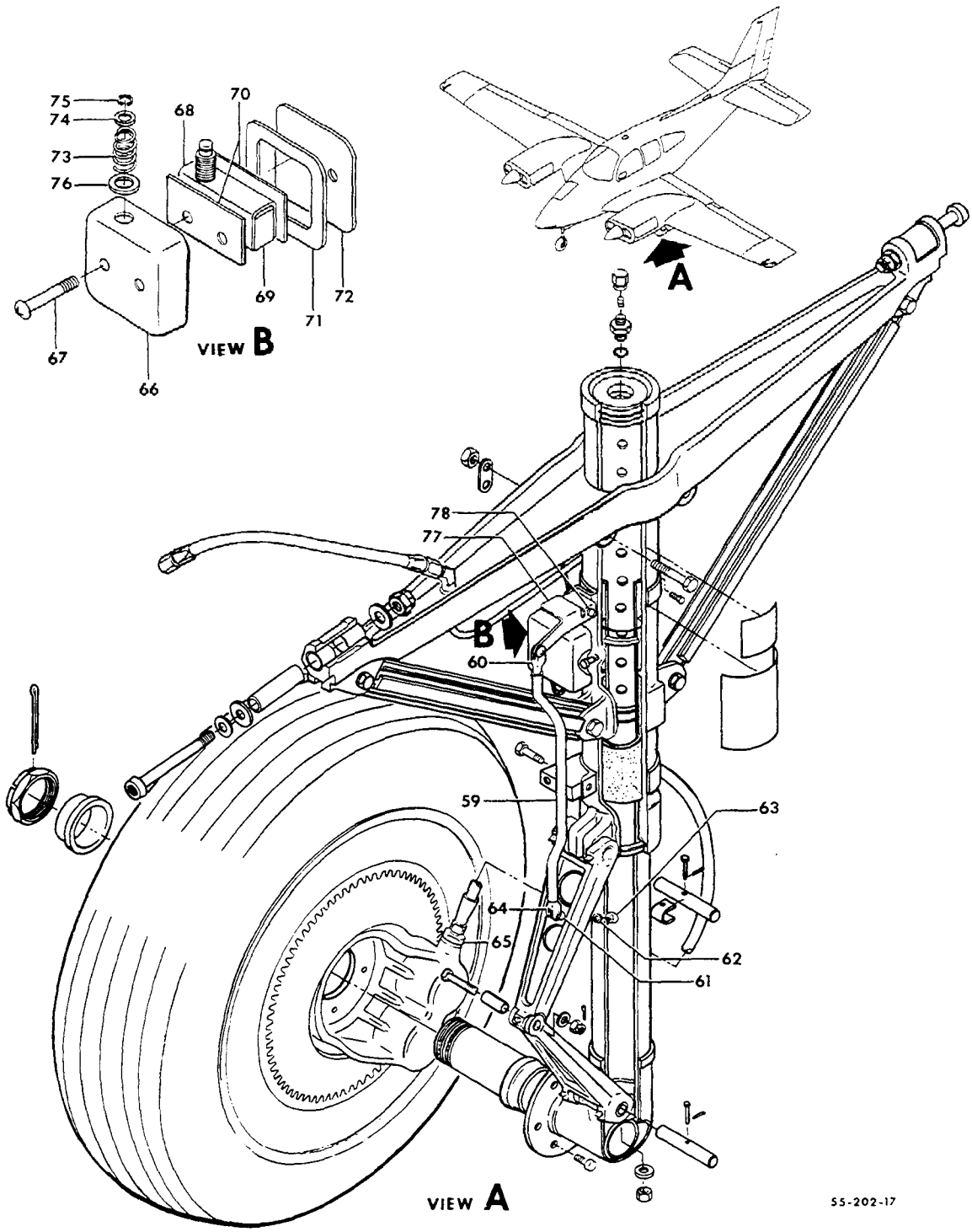

FIGURE 10-20.MAIN LANDING GEAR ASSY
/SHEET 4 OF 5 SHEETS/

ATA CODE & INDEX NO.	PART NO.	DESCRIPTION 1 2 3 4 5 6 7	UNITS PER ASSY	USABLE ON CODE
10-20 - 59	35-361145	LINK ASSY,LANDING GEAR SAFETY SWITCH.	1	10
		/ATTACHING PARTS/		
- 60	AN393-13	PIN	2	
	AN960D10	WASHER.	4	
	MS24665-130	PIN,COTTER/SUPERSEDES AN380-2-1/.	2	
		——*——		
- 61	AN42-4	BOLT,EYE.	1	10
		/ATTACHING PARTS/		
- 62	AN960-10L	WASHER.	2	
- 63	AN310-3	NUT	1	
	MS24665-132	PIN,COTTER/SUPERSEDES AN380-2-2/.	1	
		——*——		
- 64	AN161-16RS	FORK.	1	10
- 65	AN919-6D	REDUCER	1	10
	MS28778-6	PACKING	1	10
	95-361015-601	SWITCH ASSY,LANDING GEAR SAFETY	1	10
		/ATTACHING PARTS/		
	AN3-12A/M/	BOLT.	1	
	AN960D10	WASHER.	1	
	MS20365-1032	NUT	1	
		——*——		
- 66	35-361135-1	. BOX,LANDING GEAR SAFETY SWITCH.	1	10
- 67	AN526-632-22	. SCREW	2	10
	AN960A6	. WASHER/SUPERSEDES AN960D6	2	10
	AN742-6C	. CLAMP	1	10
	MS20365-632	. NUT/SUPERSEDES AN365-632/	2	10
- 68	MC2711	. ACTUATOR.	1	10
- 69	MS25026-1	. SWITCH.	1	10
- 70	45-364238	. INSULATOR	2	10
- 71	35-361136	. GASKET.	1	10
- 72	35-361134	. COVER	1	10
	AN960A816L	. WASHER.	2	10
- 73	35-361150	. SPRING.	1	10
- 74	100951DD032YF	. WASHER.	1	10
- 75	NAS51-31	. RING,SNAP	1	10
- 76	35-361153	. WASHER.	1	10
- 77	35-361132-1	. ARM,SAFETY SWITCH	1	10
- 78	AN393-29	. PIN	1	10
	AN960-10	. WASHER.	1	10
	MS24665-130	. PIN,COTTER/SUPERSEDES AN380-2-1/.	1	10

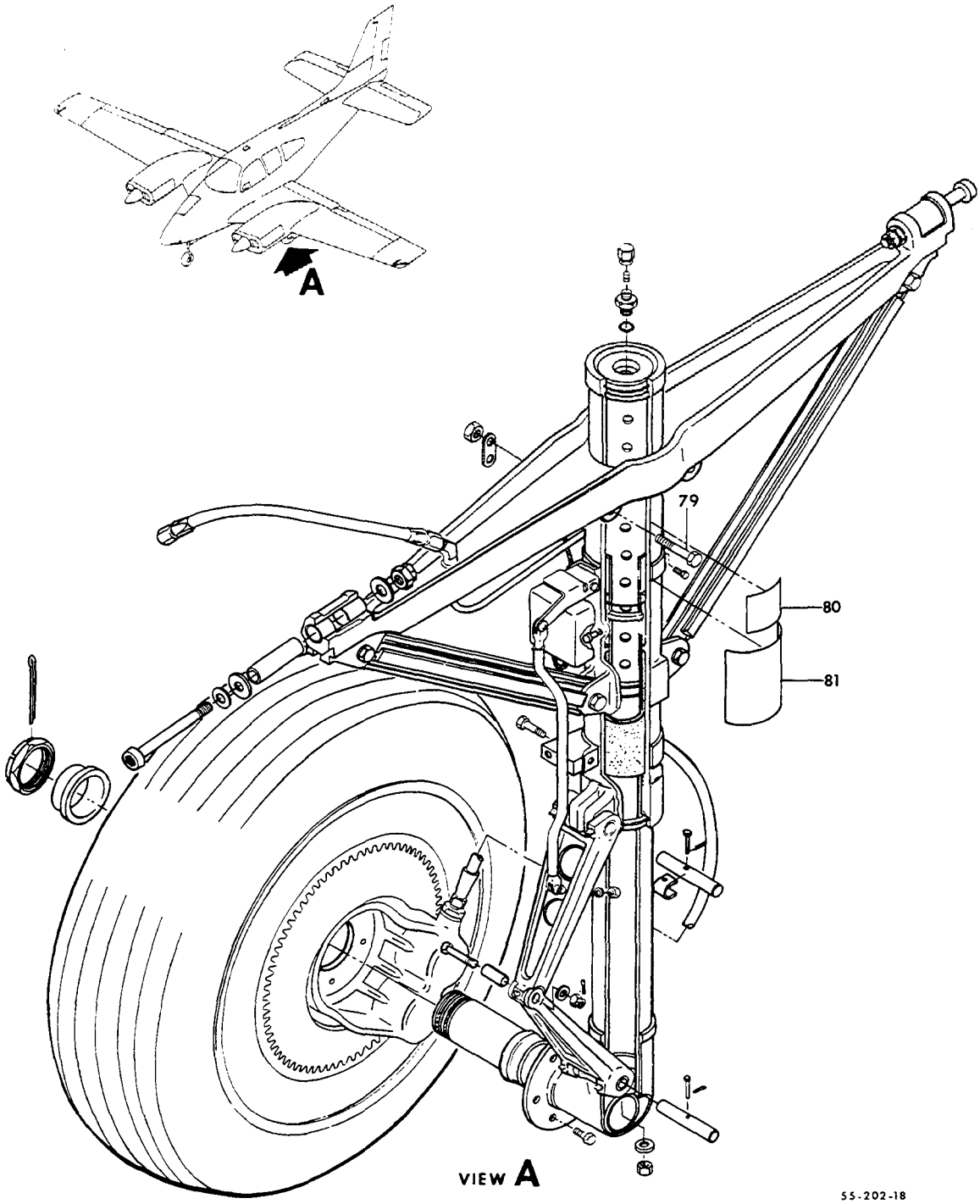

FIGURE 10-20. MAIN LANDING GEAR ASSY
/SHEET 5 OF 5 SHEETS/

ATA CODE & INDEX NO.	PART NO.	DESCRIPTION 1 2 3 4 5 6 7	UNITS PER ASSY	USABLE ON CODE
10-20 - 79	35-361133	. . BRACKET ASSY.	1	10
	106242-3-03600	. . TUBING,INSULATING	1	10
	106242-3-00104	. . TUBING,INSULATING	2	10
	106242-1A-00100	. . TUBING,INSULATING	2	10
	MS35489-5	. . GROMMET/SUPERSEDES AN931-3-10/.	1	10
	35-361148-1	. . BOOT.	1	10
- 80	112406	PLACARD,LANDING GEAR PATENT	1	10
- 81	96-810012	PLATE,MAIN SHOCK STRUT LH INSTRUCTION	1	1
	96-810020	PLATE,MAIN SHOCK STRUT LH INSTRUCTION	1	7
	35-810171	PLATE,MAIN SHOCK STRUT LH INSTRUCTION	1	24
	36-810011	PLATE,MAIN SHOCK STRUT LH INSTRUCTION	1	25
	96-810018	PLATE,MAIN SHOCK STRUT LH INSTRUCTION	1	26
	58-810012	PLATE,MAIN SHOCK STRUT LH INSTRUCTION	1	27
	96-810013	PLATE,MAIN SHOCK STRUT RH INSTRUCTION	1	1
	96-810021	PLATE,MAIN SHOCK STRUT RH INSTRUCTION	1	7
	35-810170	PLATE,MAIN SHOCK STRUT RH INSTRUCTION	1	24
	36-810012	PLATE,MAIN SHOCK STRUT RH INSTRUCTION	1	25
	96-810019	PLATE,MAIN SHOCK STRUT RH INSTRUCTION	1	26
	58-810013	PLATE,MAIN SHOCK STRUT RH INSTRUCTION	1	27

CODES OF EFFECTIVITY

1	TC-251,TC-344 AND TC-355 THRU TC-422	2	TC-423 THRU TC-849
3	TC-850 THRU TC-1010	4	TC-1011 THRU TC-1607 TE-1 THRU TE-167
5	TC-1289 THRU TC-1607 TE-1 THRU TE-167	6	TE-168 THRU TE-942 EXCEPT TE-938
7	TC-423 THRU TC-1010	8	TC-1011 THRU TC-1607
9	TC-423 THRU TC-1607 TE-1 THRU TE-167	10	TC-251,TC-344 AND TC-355 THRU TC-1607 TE-1 THRU TE-942 EXCEPT TE-938
11	TC-251,TC-344 AND TC-355 THRU TC-1402 TE-1 THRU TE-850	12	TC-1403 THRU TC-1607 TE-851 THRU TE-942 EXCEPT TE-938
13	TC-251,TC-344 AND TC-355 THRU TC-1030 TE-1 THRU TE-355	14	TC-1031 THRU TC-1533 TE-356 THRU TE-907
15	TC-1031 THRU TC-1607 TE-356 THRU TE-942 EXCEPT TE-938	16	TC-251,TC-344 AND TC-355 THRU TC-1607
17	TE-1 THRU TE-942 EXCEPT TE-938	18	TC-251,TC-344 AND TC-355 THRU TC-1306 TC-1381 THRU TC-1389
19	TC-1307 THRU TC-1380 TC-1390 THRU TC-1607 TE-1 THRU TE-942 EXCEPT TE-938	20	TC-423 THRU TC-1288
21	TC-1289 THRU TC-1607 TE-1 THRU TE-942 EXCEPT TE-938	22	TC-423 THRU TC-1607 TE-1 THRU TE-942 EXCEPT TE-938
23	TC-251,TC-344 AND TC-355 THRU TC-1288	24	TC-1011 THRU TC-1306 TC-1381 THRU TC-1389
25	TC-1307 THRU TC-1380 TC-1390 THRU TC-1607	26	TE-1 THRU TE-777 TE-834 THRU TE-840
27	TE-778 THRU TE-833 TE-841 THRU TE-942 EXCEPT TE-938		

"END"

32-10-30
DOOR INSTALLATION,MAIN LANDING GEAR

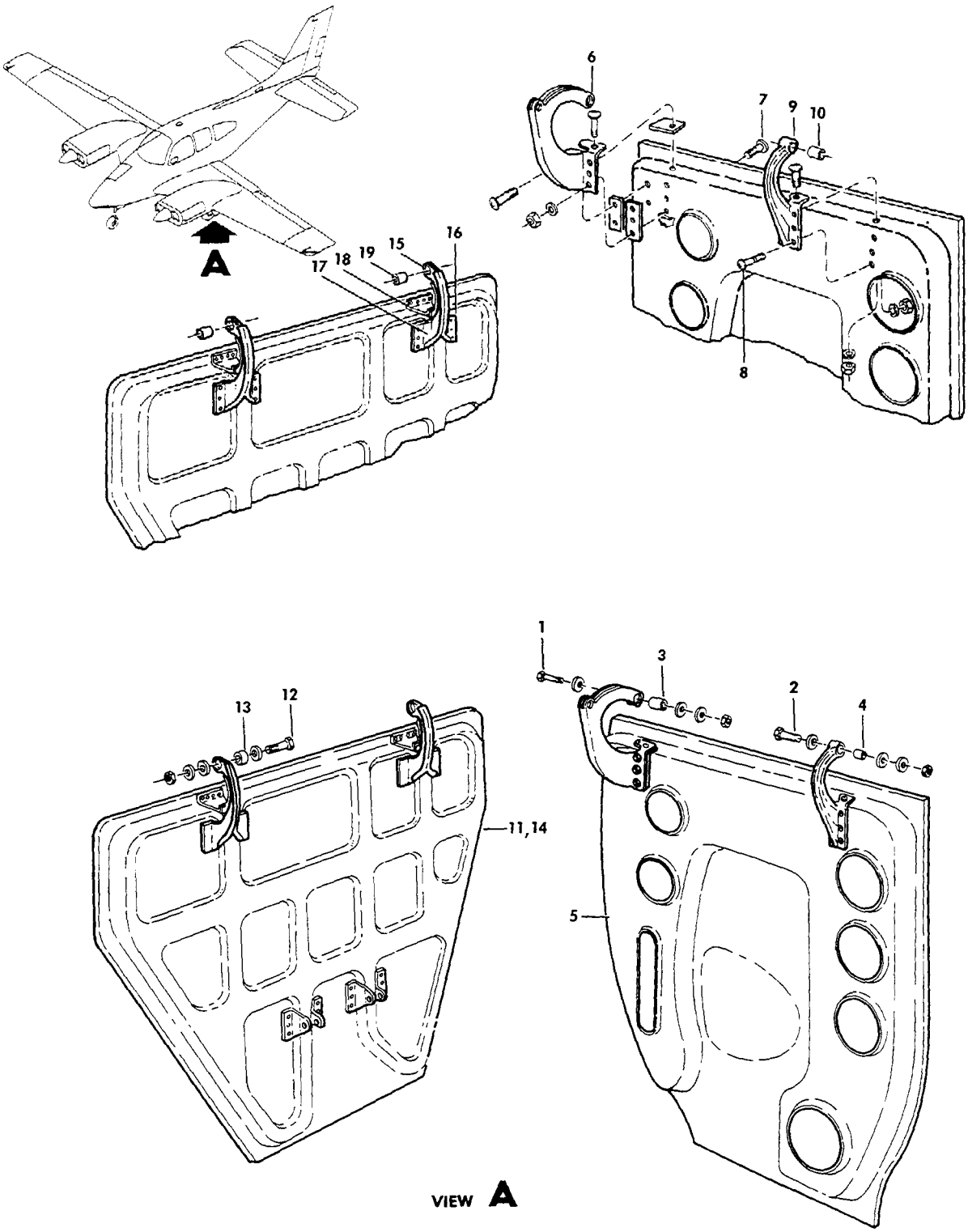

FIGURE 10-30.MAIN LANDING GEAR DOORS
/SHEET 1 OF 2 SHEETS/

SUB-SECT UNIT & ITEM NO.	PART NO.	DESCRIPTION 1 2 3 4 5 6 7	UNITS PER ASSY	USABLE ON CODE
10-30	35-815055	DOOR INSTL,MAIN LANDING GEAR LH	NP	
	35-815055-1	DOOR INSTL,MAIN LANDING GEAR RH	NP	
	35-815055-158	. DOOR ASSY,MAIN GEAR INBD LH	1	
	35-815055-159	. DOOR ASSY,MAIN GEAR INBD RH	1	
		/ATTACHING PARTS/		
- 1	AN3-15A/M/	. BOLT.	1	
- 2	AN3-10A/M/	. BOLT.	1	
	AN960-10	. WASHER.	1	
	AN960-10L	. WASHER.	2	
- 3	105739X-ZP1050	. BUSHING	1	
- 4	105739X-ZP0500	. BUSHING	1	
	MS20365-1032	. NUT	1	
		——*——		
- 5	R 35-815055-164	. . DOOR ASSY,INBD LH	NP	
	R 35-815055-158	. . DOOR ASSY,INBD LH	1	
	R 35-815055-165	. . DOOR ASSY,INBD RH	NP	
	R 35-815055-159	. . DOOR ASSY,INBD RH	1	
- 6	35-815266-1	. . HINGE ASSY,FWD INBD LH.	1	
	35-815266-2	. . HINGE ASSY,FWD INBD RH.	1	
		/ATTACHING PARTS/		
- 7	AN525-10-24	. . SCREW	3	
	AN525-10-8	. . SCREW	2	
	MS27039-1-09	. . SCREW	2	
	AN960-10	. . WASHER.	3	
	MS20365-1032	. . NUT	3	
	35-815055-108	. . SHIM.	AR	
	35-815055-106	. . SHIM.	AR	
	35-815055-104	. . SHIM.	AR	
	22A502	. . NUTPLATE.	2	
	22A17-02	. . NUTPLATE.	2	
		——*——		
	35-815016	. . HINGE ASSY,AFT INBD LH.	1	
	35-815016-1	. . HINGE ASSY,AFT INBD RH.	1	
		/ATTACHING PARTS/		
- 8	AN525-10-10	. . SCREW	4	
	AN960-10	. . WASHER.	3	
	AN960-10L	. . WASHER.	1	
	MS20365-1032	. . NUT	3	
	MS20364-1032	. . NUT	1	
		——*——		
- 9	35-815016-2	. . . HINGE,LH.	1	
	35-815016-3	. . . HINGE,RH.	1	
- 10	105740X-ZR0480	. . . BUSHING	1	
- 11	35-815055-68	. DOOR ASSY,OUTBD LH.	1	
	35-815055-69	. DOOR ASSY,OUTBD RH.	1	
		/ATTACHING PARTS/		
- 12	AN3-10A/M/	. BOLT.	2	
- 13	105739X-ZM0500	. BUSHING	2	
	AN960D10L	. WASHER.	2	
	AN960-10	. WASHER.	2	
	MS20365-1032	. NUT	2	
		——*——		
- 14	35-815055-64	. . DOOR ASSY,OUTBD LH/LESS HINGES & BRACKETS/.	1	
	35-815055-65	. . DOOR ASSY,OUTBD RH/LESS HINGES & BRACKETS/.	1	
- 15	35-815055-114	. . HINGE ASSY,FWD OUTBD LH	1	
	35-815055-115	. . HINGE ASSY,FWD OUTBD RH	1	
- 16	35-815055-120	. . . HINGE LEG,FWD LH.	1	
	35-815055-121	. . . HINGE LEG,FWD RH.	1	
- 17	35-815055-118	. . . HINGE LEG,AFT LH.	1	
	35-815055-119	. . . HINGE LEG,AFT RH.	1	
- 18	35-815055-36	. . . BRACKET,FWD LH.	1	
	35-815055-37	. . . BRACKET,FWD RH.	1	
- 19	105740X-ZJ0490	. . . BUSHING	1	

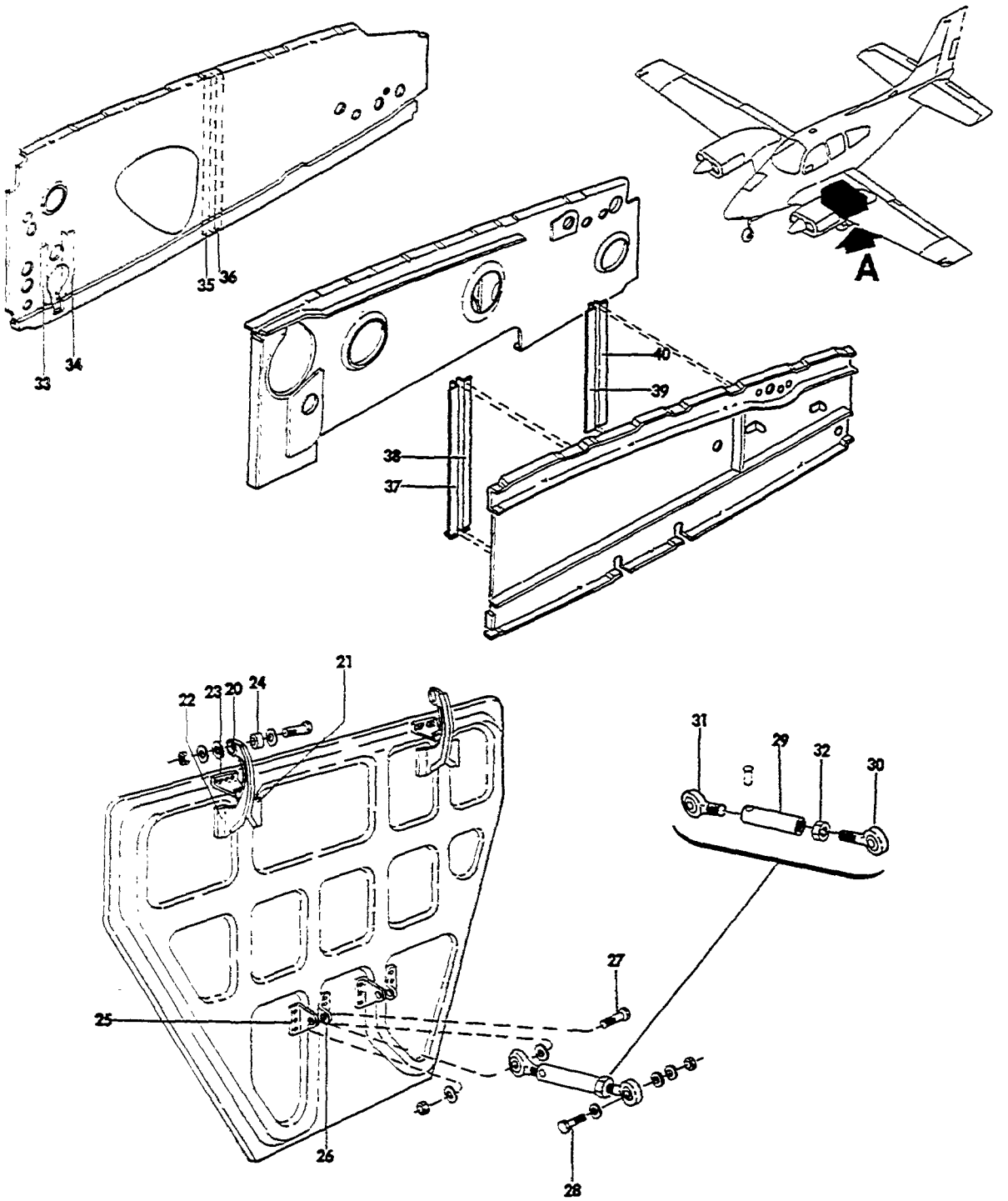

VIEW A

55-204-5

FIGURE 10-30. MAIN LANDING GEAR DOORS
/SHEET 2 OF 2 SHEETS/

ATA CODE & INDEX NO.	PART NO.	DESCRIPTION 1 2 3 4 5 6 7	UNITS PER ASSY	USABLE ON CODE
10-30 - 20	35-815055-116	. . HINGE ASSY,AFT OUTBD.	1	
- 21	35-815055-122	. . . LEG,FWD HINGE	1	
- 22	35-815055-124	. . . LEG,AFT HINGE	1	
- 23	35-815055-42	. . . BRACKET,AFT OUTBD HINGE	1	
- 24	105740X-ZJ0490	. . . BUSHING	1	
- 25	35-815055-62	. . BRACKET,LH OUTBD DOOR	2	
- 26	35-815055-63	. . BRACKET,RH OUTBD DOOR	2	
	35-815056	. LINK ASSY,LANDING GEAR DOOR OUTBD	1	
		/ATTACHING PARTS/		
- 27	AN4-10A/M/	. BOLT.	1	
- 28	AN4-7A/M/	. BOLT.	1	
	AN960-416	. WASHER.	2	
	MS20365-428	. NUT	2	
- 29	35-815056-2	. . TUBE,LANDING GEAR DOOR.	1	
- 30	HM4U	. . END,ROD	1	
- 31	35-815056-4	. . END,ROD	1	
- 32	AN316-4R	. . NUT	1	
- 33	95-110031-11	ANGLE,FWD INBD LH/FWD HINGE/.	1	
	95-110032-5	ANGLE,FWD INBD RH/FWD HINGE/.	1	
- 34	95-110031-13	ANGLE,FWD INBD LH/AFT HINGE/.	1	
	95-110032-7	ANGLE,FWD INBD RH/AFT HINGE/.	1	
- 35	95-110031-17	ANGLE,AFT INBD LH/FWD HINGE/.	1	
	95-110032-13	ANGLE,AFT INBD RH/FWD HINGE/.	1	
- 36	95-110031-19	ANGLE,AFT INBD LH/AFT HINGE/.	1	
	95-110032-11	ANGLE,AFT INBD RH/AFT HINGE/.	1	
- 37	95-110023-15	ANGLE,FWD OUTBD LH/FWD HINGE/	1	
	95-110023-16	ANGLE,FWD OUTBD RH/FWD HINGE/	1	
- 38	95-110023-13	ANGLE,FWD OUTBD LH/AFT HINGE/	1	
	95-110023-14	ANGLE,FWD OUTBD RH/AFT HINGE/	1	
- 39	95-110023-11	ANGLE,AFT OUTBD LH/FWD HINGE/	1	
	95-110023-12	ANGLE,AFT OUTBD RH/FWD HINGE/	1	
- 40	95-110023-9	ANGLE,AFT OUTBD LH/AFT HINGE/	1	
	95-110023-10	ANGLE,AFT OUTBD RH/AFT HINGE/	1	

"END"

32-20-01
NOSE LANDING GEAR INSTALLATION

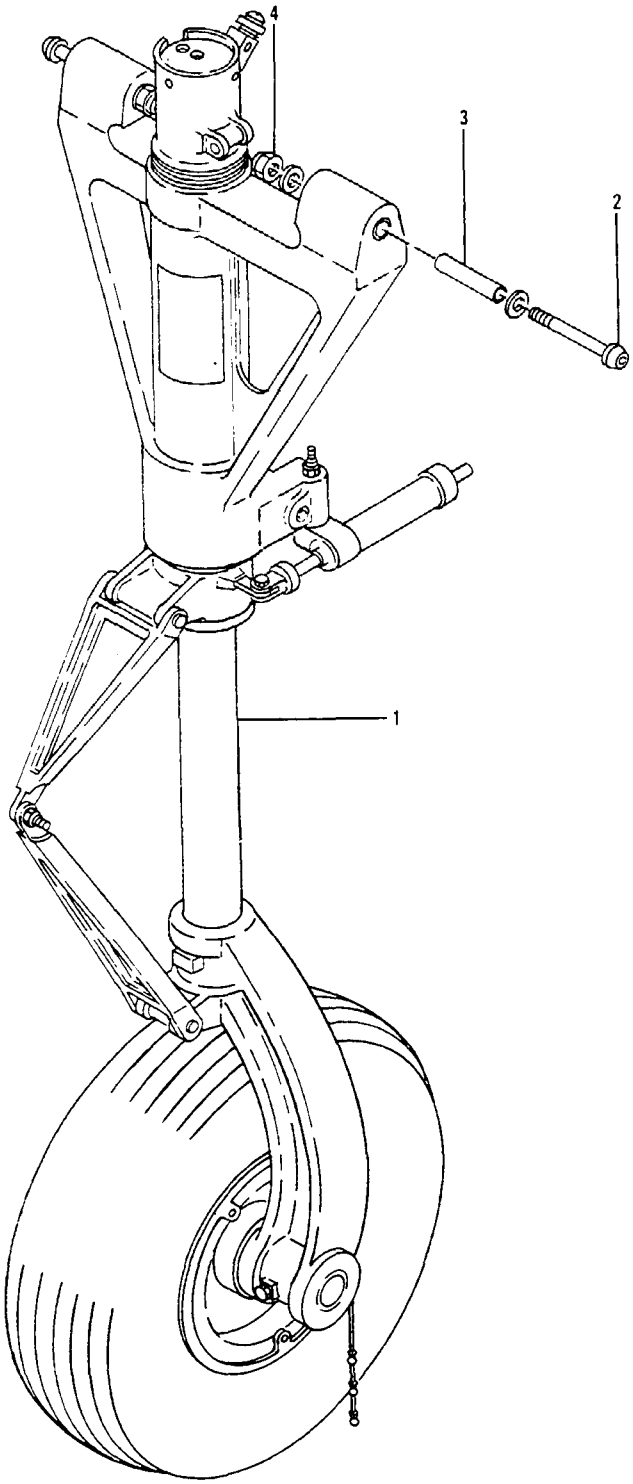

E55-205-1

FIGURE 20-01.NOSE LANDING GEAR INSTALLATION

SUB-SECT UNIT & ITEM NO.	PART NO.	DESCRIPTION 1 2 3 4 5 6 7	UNITS PER ASSY	USABLE ON CODE
20-01	35-825196-7	GEAR INSTL,NOSE LANDING	NP	1
	35-825196-15	GEAR INSTL,NOSE LANDING	NP	2
	35-825196-21	GEAR INSTL,NOSE LANDING	NP	3
	96-820000	GEAR INSTL,NOSE LANDING	NP	5
	96-820000-5	GEAR INSTL,NOSE LANDING	NP	6
		NOTE FOR BREAKDOWN OF NOSE LANDING GEAR ASSY SEE CHAPTER 32-20-10 AND 32-20-20.		
- 1	R 35-825196-601	. GEAR ASSY,NOSE LANDING/COMPLETE/.	NP	7
	R 35-825196-611	. GEAR ASSY,NOSE LANDING/COMPLETE/.	NP	8
	R 35-825196-614	. GEAR ASSY,NOSE LANDING/COMPLETE/.	NP	9
	35-825196-618	. GEAR ASSY,NOSE LANDING/COMPLETE/.	1	10
	R 36-820019-603	. GEAR ASSY,NOSE LANDING/COMPLETE/SPARES FOR. . 35-825196-601,-611,-614 AND 35-825196-618/SEE CHAPTER 32-20-05/	NP	4
	96-820000-601	. GEAR ASSY,NOSE LANDING/COMPLETE/.	1	5
	96-820000-603	. GEAR ASSY,NOSE LANDING/COMPLETE/.	1	11
	96-820000-605	. GEAR ASSY,NOSE LANDING/COMPLETE/.	1	12
	R 35-825196-691	. GEAR ASSY,NOSE LANDING/LESS TIRE & WHEEL/ . .	NP	7
	R 35-825196-696	. GEAR ASSY,NOSE LANDING/LESS TIRE & WHEEL/ . .	NP	13
	R 36-820020-3	. GEAR ASSY,NOSE LANDING/LESS TIRE AND WHEEL/ . SPARES FOR 35-825196-691 AND -696	1	4
	96-820000-651	. GEAR ASSY,NOSE LANDING/LESS TIRE & WHEEL/ . .	1	14
	R NAS1081-4A12	. SCREW,SET/PISTON AND FORK ASSEMBLY/ . . . . . /ATTACHING PARTS/	1	4
- 2	NAS146-46/M/	. BOLT.	2	15
	NAS146-52/M/	. BOLT.	2	14
- 3	45-825011	. BUSHING	2	15
	60-820073-3	. BUSHING	2	14
	R MS20002C6	. WASHER.	2	
	NAS143-6C	. WASHER/SUPERSEDES MS20002C6/.	2	16
	R 100951X071YP	. WASHER.	2	4
	100951X032YP	. WASHER.	2	
	100951S016YP	. WASHER/ALTERNATE FOR 100951X032YP/.	AR	
- 4	MS20365-624	. NUT	2	
	H10-6-M	. NUT/ALTERNATE FOR MS20365-624	2	
	R 35-825195-75	. BUSHING/AXLE/	1	4
	R 95-820000-1	. WASHER/AXLE/.	1	4
	R AN7502-20	. NUT/AXLE/	1	4
	R MS24665-359	. PIN,COTTER/AXLE/.	1	4

CODES OF EFFECTIVITY

1	TC-1 THRU TC-809 EXCEPT TC-805	2	TC-805 AND TC-811 THRU TC-1077 EXCEPT TC-663,TC-805 AND TC-810
3	TC-663,TC-805 AND TC-810 TC-1078 THRU TC-1607 TE-1 THRU TE-300	4	TC-1 THRU TC-1392 TC-1397 THRU TC-1401 TC-1403 THRU TC-1607 TE-1 THRU TE-300
5	TE-301 THRU TE-405	6	TE-406 THRU TE-942 EXCEPT TE-938
7	TC-1 THRU TC-519	8	TC-520 THRU TC-809
9	TC-810 THRU TC-1288	10	TC-1289 THRU TC-1607 TE-1 THRU TE-300
11	TE-406 THRU TE-767	12	TE-768 THRU TE-942 EXCEPT TE-938
13	TC-520 THRU TC-1607 TE-1 THRU TE-300	14	TE-301 THRU TE-942 EXCEPT TE-938
15	TC-1 THRU TC-1607 TE-1 THRU TE-300	16	TC-1 THRU TC-1607 TE-1 THRU TE-767

32-20-05
NOSE LANDING GEAR ASSEMBLY
TC-1 THRU TC-1392,TC-1397 THRU TC-1401
TC-1403 THRU TC-1607;TE-1 THRU TE-300

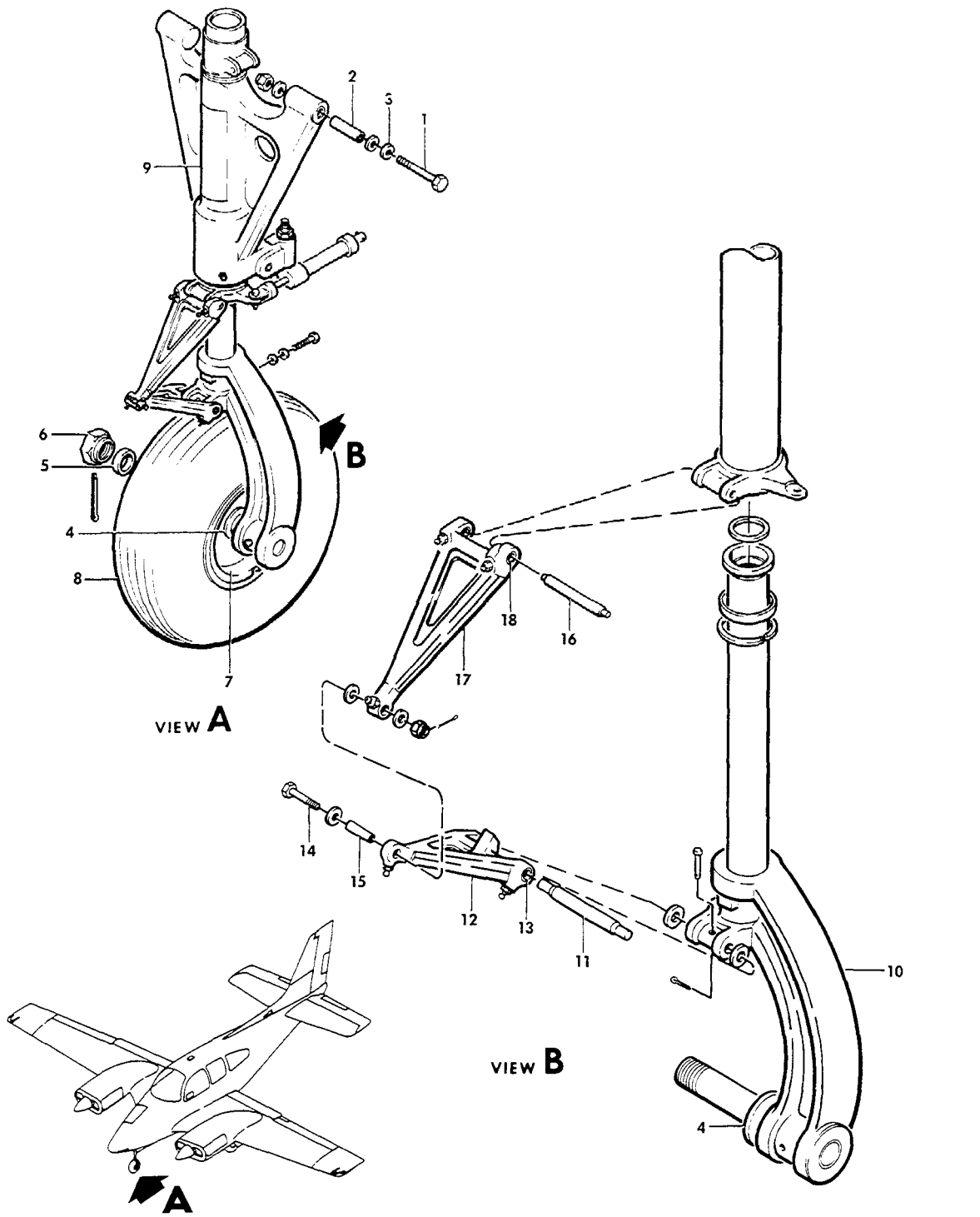

FIGURE 20-05.NOSE LANDING GEAR ASSEMBLY
/SHEET 1 OF 2 SHEETS/

SUB-SECT UNIT & ITEM NO.		PART NO.	DESCRIPTION 1 2 3 4 5 6 7	UNITS PER ASSY	USABLE ON CODE
20-05	R	36-820019-603	GEAR ASSY,NOSE/COMPLETE/.	NP	1
			ORDER 36-820020-3/LESS TIRE AND WHEEL/		
			/ATTACHING PARTS/		
- 1	R	NAS146-46/M/	BOLT.	2	
- 2	R	45-825011	BUSHING	2	
- 3	R	100951X032YP	WASHER.	2	
	R	100951X016YP	WASHER.	4	
	R	MS20002C6	WASHER.	4	
	R	NAS1081-4A12	SCREW,SET	1	
	R	130909N25	NUT	2	
			----*----		
	R	36-820019-9	. WHEEL,TIRE AND TUBE ASSY/BALANCED/.	1	1
			/SPARES FOR 35-825196-23/		
			/ATTACHING PARTS/		
- 4	R	35-825195-35	. BUSHING/USE WITH 35-825196-23/.	1	
	R	96-820019-11	. SPACER/USE WITH 36-820019-9/.	2	
			/IF LIP SEAL REPLACEMENT KIT 35-8008-1		
			HAS BEEN INSTALLED IN 35-825196-23 USE		
			96-820019-11 SPACER INSTEAD OF		
			35-825195-35 BUSHING/		
- 5	R	95-820000-1	. WASHER.	1	
- 6	R	MS21025-20	. NUT	1	
	R	MS24665-359	. PIN,COTTER.	1	
			----*----		
- 7	R	36-8002-1	. . WHEEL ASSY/TUBE TYPE TIRE/.	1	1
- 8	R	5 00 X 5 6P TT	. . TIRE,6 PLY TUBE TYPE.	1	1
	R	5 00 X 5	. . TUBE.	1	1
- 9	R	95-824017	. PLACARD,OIL-AIR STRUT INSTRUCTIONS.	1	1
- 10	R	35-825195-79	. PISTON AND FORK ASSEM	1	1
	R	AN4-24A/M/	. . BOLT.	1	1
	R	AN960-416	. . WASHER.	1	1
	R	130909N32	. . NUT	1	1
	R	35-825195-607	. PISTON AND FORK ASSEMBLY.	NP	1
	R	MS15002-1	. FITTING,GREASE/LOWER KNEE/.	2	1
	R	1729	. FITTING,GREASE/LOWER KNEE/.	1	1
	R	35-825193	. KNEE ASSY,LOWER	1	1
	R	AN960-616	. WASHER/BETWEEN LOWER KNEE AND PISTON-AXLE/. .	2	1
			/ATTACHING PARTS/		
- 11	R	60-820029-1	. PIN	1	
	R	MS20392-1C25	. PIN	1	
	R	MS24665-132	. PIN COTTER.	1	
			----*----		
- 12	R	35-825193-1	. . KNEE.	1	1
- 13	R	35-820123	. . BUSHING	2	1
	R	MS15002-1	. FITTING,GREASE/UPPER KNEE/.	2	1
	R	1729	. FITTING,GREASE/UPPER KNEE/.	1	1
	R	35-820107	. KNEE ASSY,UPPER	1	1
			/ATTACHING PARTS/		
- 14	R	AN4-12/M/	. BOLT.	1	
	R	100951S063ZZ	. WASHER.	1	
	R	100951S063YH	. WASHER.	1	
- 15	R	35-820028	. BUSHING	1	
	R	130909N7	. NUT	1	
	R	MS24665-132	. PIN,COTTER.	1	
- 16	R	35-825200	. PIN	1	
	R	MS20392-1C23	. PIN	1	
	R	MS24665-132	. PIN,COTTER.	1	
			----*----		
- 17	R	35-820107-1	. . KNEE,UPPER.	1	1
- 18	R	35-820123	. . BUSHING	2	1

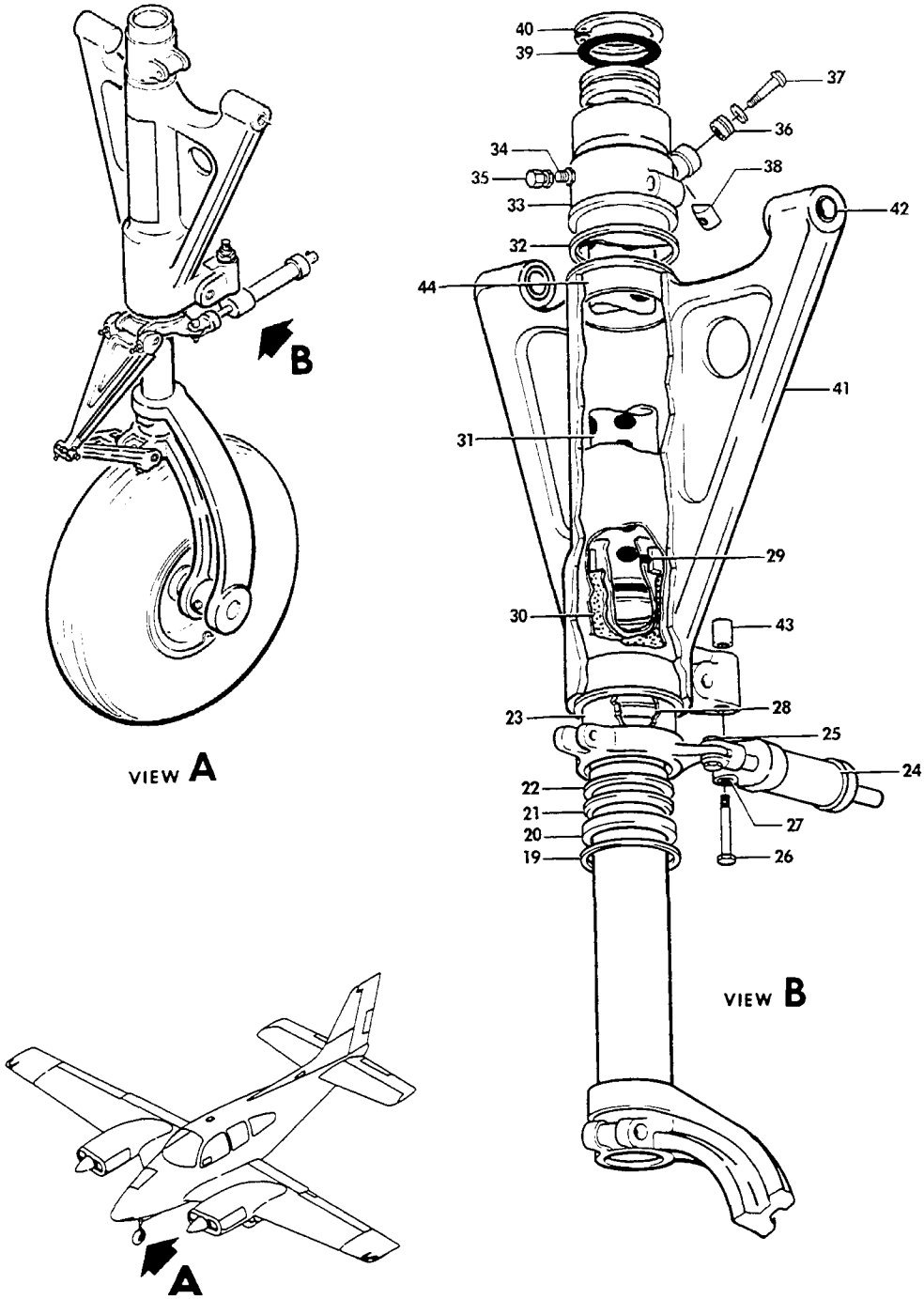

FIGURE 20-05.NOSE LANDING GEAR ASSEMBLY
/SHEET 2 OF 2 SHEETS/

SUB-SECT UNIT & ITEM NO.		PART NO.	DESCRIPTION 1 2 3 4 5 6 7	UNITS PER ASSY	USABLE ON CODE
20-05 - 19	R	111200-6	RING,SNAP	1	1
- 20	R	45-825032	ADAPTER	1	1
- 21	R	MS28776R2-19	SCRAPER	1	1
	R	35-825195-31	BARREL ASSY	1	1
- 22	R	45-825031	BEARING	1	1
- 23	R	35-825195-33	BARREL ASSY	1	1
- 24	R	35-825145-2	DAMPENER ASSY,NOSE GEAR SHIMMY/SEE 32-50-10/. /ATTACHING PARTS/	1	1
- 25	R	130909B17	BOLT.	1	
	R	105739S-ZK0190	BUSHING	1	
	R	AN960-10	WASHER.	1	
	R	AN960-10L	WASHER.	1	
	R	130909N29	NUT	1	
- 26	R	AN6-31A	BOLT.	1	
- 27	R	105739S-YP1483	BUSHING	1	
	R	100951X031YN	WASHER.	1	
	R	100951X031YM	WASHER.	1	
	R	130909N25	NUT	1	
			----*----		
- 28	R	35-380020-3	RING,SHOCK ABSORBER	1	1
- 29	R	AN6230-2	O RING.	1	1
- 30	R	35-820130-2	PAD,SHOCK ABSORBER.	1	1
- 31	R	36-820021-3	ORIFICE TUBE ASSY,SHOCK ABSORBER. /SPARES FOR 35-825195-51/	1	1
- 32	R	35-820134	SHIM.	1	1
- 33	R	45-825033	COLLAR,NOSE GEAR STEERING /ATTACHING PARTS/	1	1
	R	45-825034	BOLT.	2	
			----*----		
- 34	R	118642-1	BODY,AIR VALVE.	1	1
	R	MS28778-5	GASKET.	1	1
	R	AN809-1	CORE,NOSE STRUT FILLER VALVE.	1	1
- 35	R	MS20813-1	CAP,NOSE STRUT FILLER VALVE	1	1
- 36	R	NAS505-4J	BEARING,NEEDLE.	1	1
- 37	R	AN24-15A	BOLT.	1	1
	R	AN960-416L	WASHER.	1	1
- 38	R	S1452-048	NUT,BARREL.	1	1
- 39	R	AN6230-1	O RING.	1	1
- 40	R	MS16625-1187	RING,SNAP	1	1
	R	45-820096-603	BRACE ASSY,NOSE SHOCK ABSORBER.	1	1
- 41	R	45-820096-17	BRACE	1	1
- 42	R	35-820135	BEARING	2	1
- 43	R	105740X-YN1458	BUSHING	1	1
	R	105740X-YD0490	BUSHING,UPPER SHOCK	1	1
	R	105740X-YD1365	BUSHING,LOWER SHOCK	1	1
- 44	R	35-820115	BEARING	2	1
	R	58-820013-3	PLACARD,TOW TURN LIMITS	1	

CODES OF EFFECTIVITY

1 TC-1 THRU TC-1392
TC-1397 THRU TC-1401
TC-1403 THRU TC-1607
TE-1 THRU TE-300

32-20-10
NOSE LANDING GEAR ASSY
TC-1 THRU TC-1607,TE-1 THRU TE-300

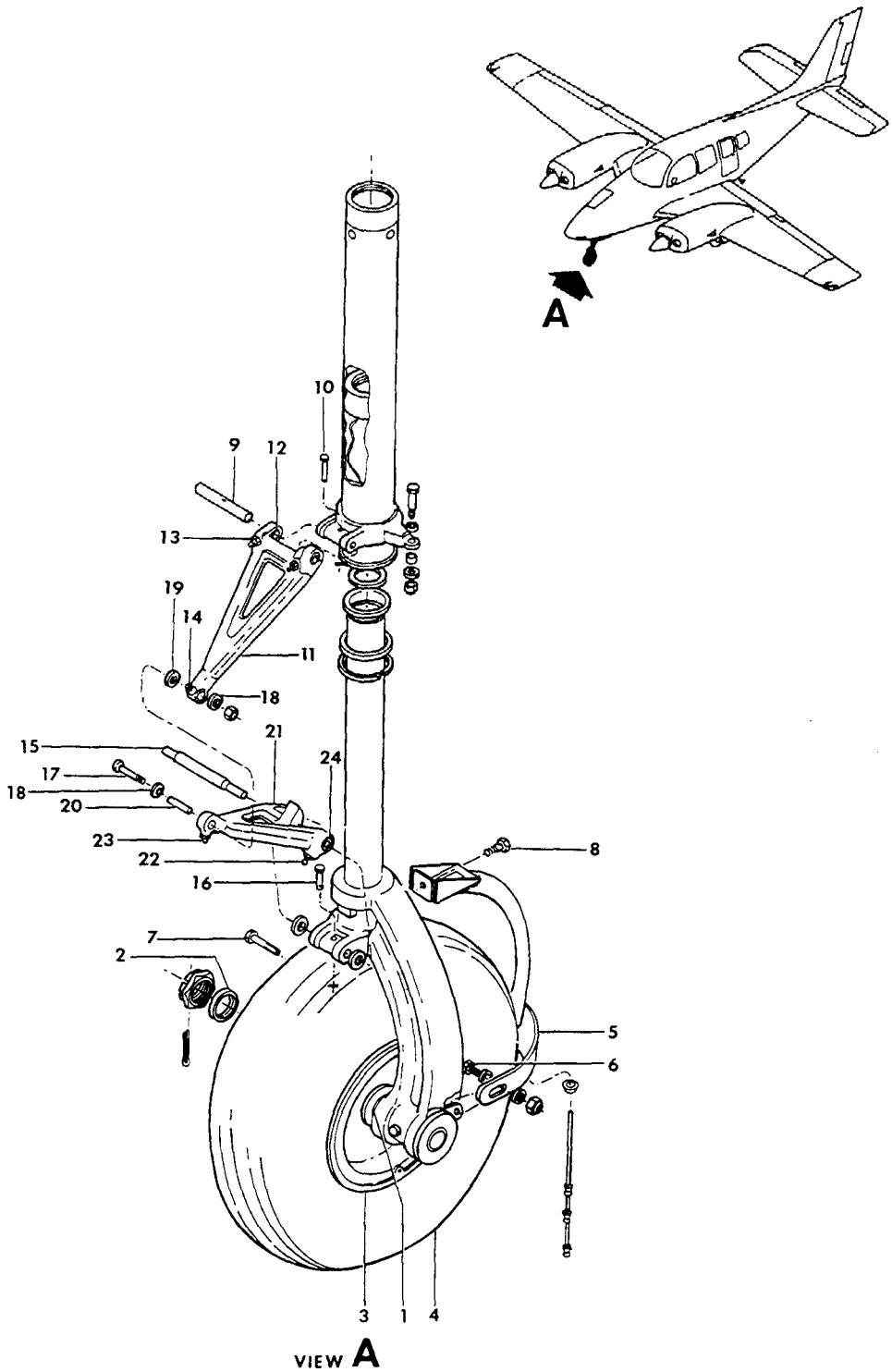

55-206-13

FIGURE 20-10.NOSE LANDING GEAR ASSEMBLY
/SHEET 1 OF 3 SHEETS/

SUB-SECT UNIT & ITEM NO.	PART NO.	DESCRIPTION 1 2 3 4 5 6 7	UNITS PER ASSY	USABLE ON CODE
20-10	R 35-825196-601	GEAR ASSY,NOSE/COMPLETE/.	NP	1
	R 35-825196-611	GEAR ASSY,NOSE/COMPLETE/.	NP	2
	R 35-825196-614	GEAR ASSY,NOSE/COMPLETE/.	NP	3
	R 35-825196-618	GEAR ASSY,NOSE/COMPLETE/.	NP	4
	R 36-820019-603	GEAR ASSY,NOSE/COMPLETE/SEE CHAPTER 32-20-05/ . ORDER 36-820020-3/LESS TIRE AND WHEEL/	1	6
	35-825196-691	GEAR ASSY,NOSE/LESS TIRE AND WHEEL/	1	1
	35-825196-696	GEAR ASSY,NOSE/LESS TIRE AND WHEEL/	1	5
	36-820020-3	GEAR ASSY,NOSE/LESS TIRE & WHEEL/SPARES FOR . . 35-825196-691 AND -696	1	6
	35-825196-23	. WHEEL,TIRE & TUBE ASSY,BALANCED . . . . . /ATTACHING PARTS/	1	6
- 1	35-825195-35	. WASHER,NOSE WHEEL/LOCATE NEXT TO SHOULDER . . SUPERSEDES 95-820000-1/	1	
- 2	95-820000-3	. WASHER,NOSE WHEEL	1	
	AN7502-20	. NUT	1	
	AN380-4-7	. PIN,COTTER.	1	
		----*----		
- 3	95-32669	. . WHEEL ASSY/TUBELESS TIRE,SUPERSEDES . . . . 95-32102,SEE CHAPTER 32-40-10/	1	14
	95-32926	. . WHEEL ASSY/TUBE TYPE TIRE . . . . . SEE CHAPTER 32-40-10/	1	7
	36-8002-1	. . WHEEL ASSY/TUBE TYPE TIRE . . . . . SEE CHAPTER 32-40-10/	1	8
- 4	5.00X5 6P TL	. . TIRE,6 PLY TUBELESS	1	14
	5.00X5 6P TT	. . TIRE,6 PLY TUBE TYPE.	1	6
	5.00X5	. . TUBE.	1	6
- 5	35-825175-12	. WELD ASSY,NOSE WHEEL SCRAPER GUARD. . . . . /ATTACHING PARTS/	1	9
- 6	AN4-5A/M/	. BOLT,LH SIDE.	1	
- 7	AN4H3A/M/	. BOLT,RH SIDE.	1	
- 8	AN4H4A/M/	. BOLT.	1	
	AN960-416	. WASHER.	3	
	MS20365-428	. NUT/SUPERSEDES AN365-428/	1	
		----*----		
	35-820107	. KNEE ASSY,NOSE SHOCK UPPER. . . . . /ATTACHING PARTS/	1	6
- 9	35-820108	. PIN	1	
	22K2-048	. NUT,CAP	2	
- 10	AN392-23	. PIN	1	
	MS24665-132	. PIN,COTTER/SUPERSEDES AN380-2-1/.	2	
		----*----		
- 11	35-820107-1	. . KNEE,NOSE SHOCK UPPER/ORDER 35-820107/. . .	NP	6
- 12	35-820123	. . BUSHING,UPPER KNEE.	2	6
- 13	MS15002-1	. . FITTING,ZERK.	2	6
- 14	1729	. . FITTING,ZERK.	1	6
	35-825193	. KNEE ASSY,NOSE SHOCK LOWER. . . . . /ATTACHING PARTS/	1	6
- 15	35-820132	. PIN	1	
- 16	AN392-21	. PIN	1	
	MS24665-132	. PIN,COTTER/SUPERSEDES AN380-2-1/.	1	
- 17	AN4-12/M/	. BOLT.	1	
- 18	100951S063ZZ	. WASHER.	1	
- 19	100951S063YH	. WASHER.	1	
- 20	35-820028	. BUSHING	1	
	AN310-4	. NUT	1	
	MS24665-132	. PIN,COTTER/SUPERSEDES AN380-2-1/.	1	
		----*----		
- 21	35-825193-1	. . KNEE,NOSE SHOCK LOWER	1	6
- 22	MS15002-1	. . FITTING,ZERK.	1	6
- 23	1729	. . FITTING,ZERK.	1	6
- 24	35-820123	. . BUSHING	2	6

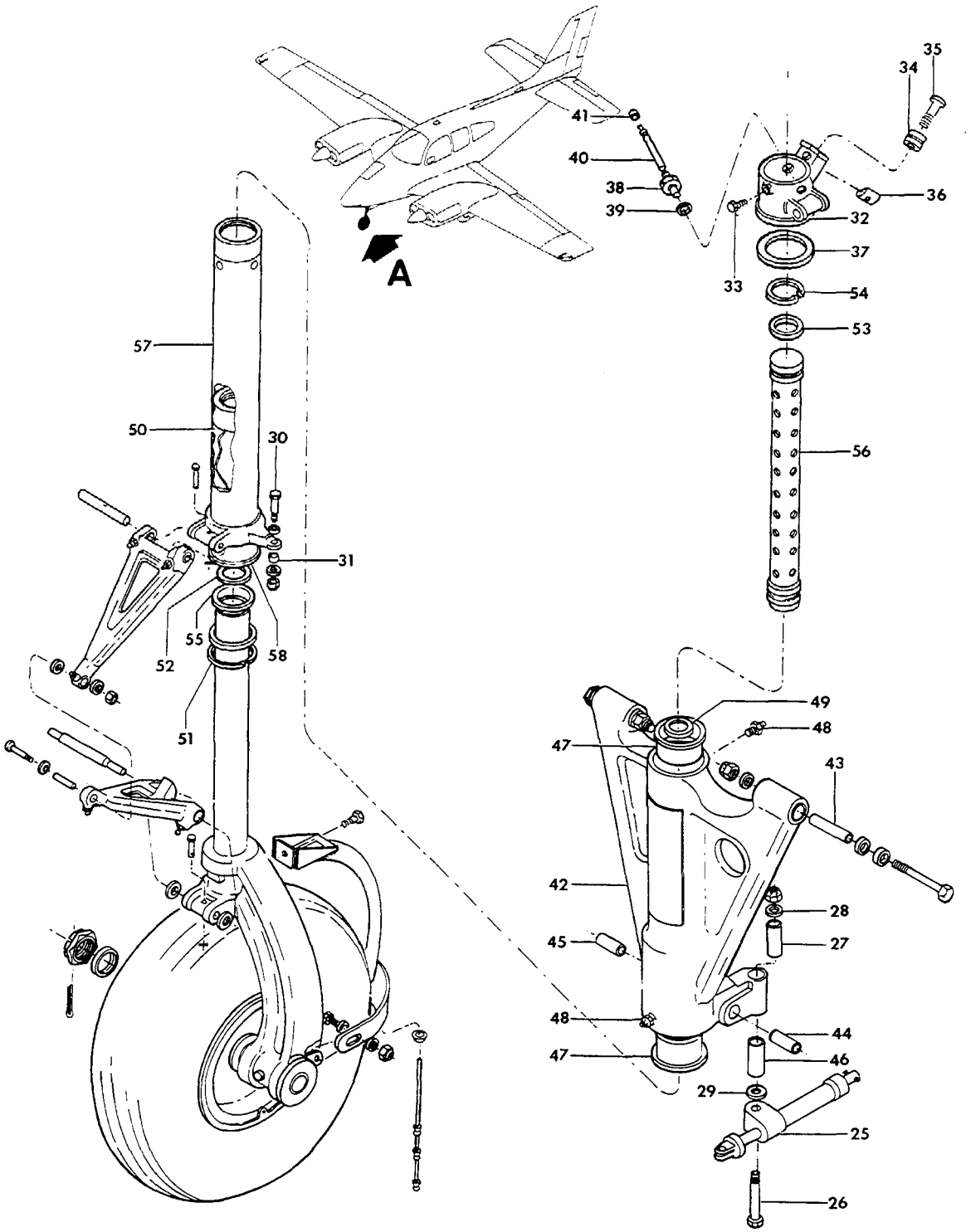

VIEW A

55-206-14

FIGURE 20-10.NOSE LANDING GEAR ASSEMBLY
/SHEET 2 OF 3 SHEETS/

SUB-SECT UNIT & ITEM NO.	PART NO.	DESCRIPTION 1 2 3 4 5 6 7	UNITS PER ASSY	USABLE ON CODE
20-10 - 25	R 35-825145-2	. DAMPER ASSY,NOSE LDG SHIMMY/SEE CHAP 32-50-10 /ATTACHING PARTS/	1	6
- 26	AN6-31A/M/	. BOLT.	1	
- 27	105739S-YP1483	. BUSHING	1	
- 28	100951X031YM	. WASHER.	1	
- 29	100951X031YN	. WASHER.	1	
	MS20365-624	. NUT/SUPERSEDES AN365-624/	1	
- 30	AN3-6A/M/	. BOLT.	1	
- 31	105739S-ZK0190	. BUSHING	1	
	AN960-10	. WASHER.	1	
	AN960-10L	. WASHER.	1	
	MS20365-1032	. NUT/SUPERSEDES AN365-1032/.	1	
		----*----		
- 32	45-825033	. COLLAR,NOSE GEAR STEERING . . . . . /ATTACHING PARTS/	1	6
- 33	45-825034	. BOLT.	2	
		----*----		
- 34	NAS505-4J	. BEARING,NEEDLE.	1	6
	NAS222-17	. SCREW	1	10
- 35	NAS222-16	. SCREW	1	11
	AN960-416L	. WASHER.	2	6
	AN960-416	. WASHER/ALTERNATE FOR AN960-416L/.	2	6
- 36	S1452-048	. NUT,BARREL.	1	6
- 37	35-820134	. SHIM,NOSE WHEEL STEERING COLLAR	1	6
	35-820125	. BODY,NOSE STRUT FILLER VALVE.	1	12
- 38	118642-1	. BODY,NOSE STRUT FILLER VALVE.	1	13
	AN622786	. PACKING	1	12
- 39	MS28778-5	. GASKET.	1	13
- 40	302D	. CORE,NOSE STRUT FILLER VALVE.	1	6
	AN813-1B	. CAP,NOSE STRUT FILLER VALVE	1	12
- 41	MS20813-1	. CAP,NOSE STRUT FILLER VALVE	1	13
	95-824005-3	. BRACE ASSY,NOSE SHOCK ABSORBER.	1	14
	95-824005-601	. BRACE ASSY,NOSE SHOCK ABSORBER.	1	15
- 42	95-824005-1	. . BRACE	1	6
- 43	35-820135	. . BEARING	2	6
- 44	105740X-YD1365	. . BUSHING	1	6
- 45	105740X-YD0490	. . BUSHING	1	6
- 46	105740X-YN1458	. . BUSHING	1	6
- 47	35-820115	. . BEARING	2	6
- 48	MS15002-1	. . FITTING,ZERK.	4	6
- 49	35-380020-3	. RING,SHOCK ABSORBER PISTON.	1	6
- 50	35-820130-2	. PAD,SHOCK ABSORBER.	1	6
- 51	111200-6	. SNAP RING	1	6
- 52	AN623082	. RING,O.	1	6
- 53	AN623081	. RING,O.	1	6
- 54	NAS50-187	. RING,INTERNAL RETAINER.	1	6
- 55	AN6231A19	. SCRAPER	1	6
	35-825195-39	. TUBE ASSY,SHOCK ABSORBER ORIFICE.	1	14
- 56	35-825195-51	. TUBE ASSY,SHOCK ABSORBER ORIFICE.	1	15
	35-825195-21	. BARREL ASSY,NOSE WHEEL.	1	12
	35-825195-31	. BARREL ASSY,NOSE WHEEL.	1	13
- 57	35-825195-27	. . BRAZE ASSY,NOSE WHEEL BARREL.	1	12
	35-825195-33	. . BRAZE ASSY,NOSE WHEEL BARREL.	1	13
- 58	45-825031	. . BEARING	1	6

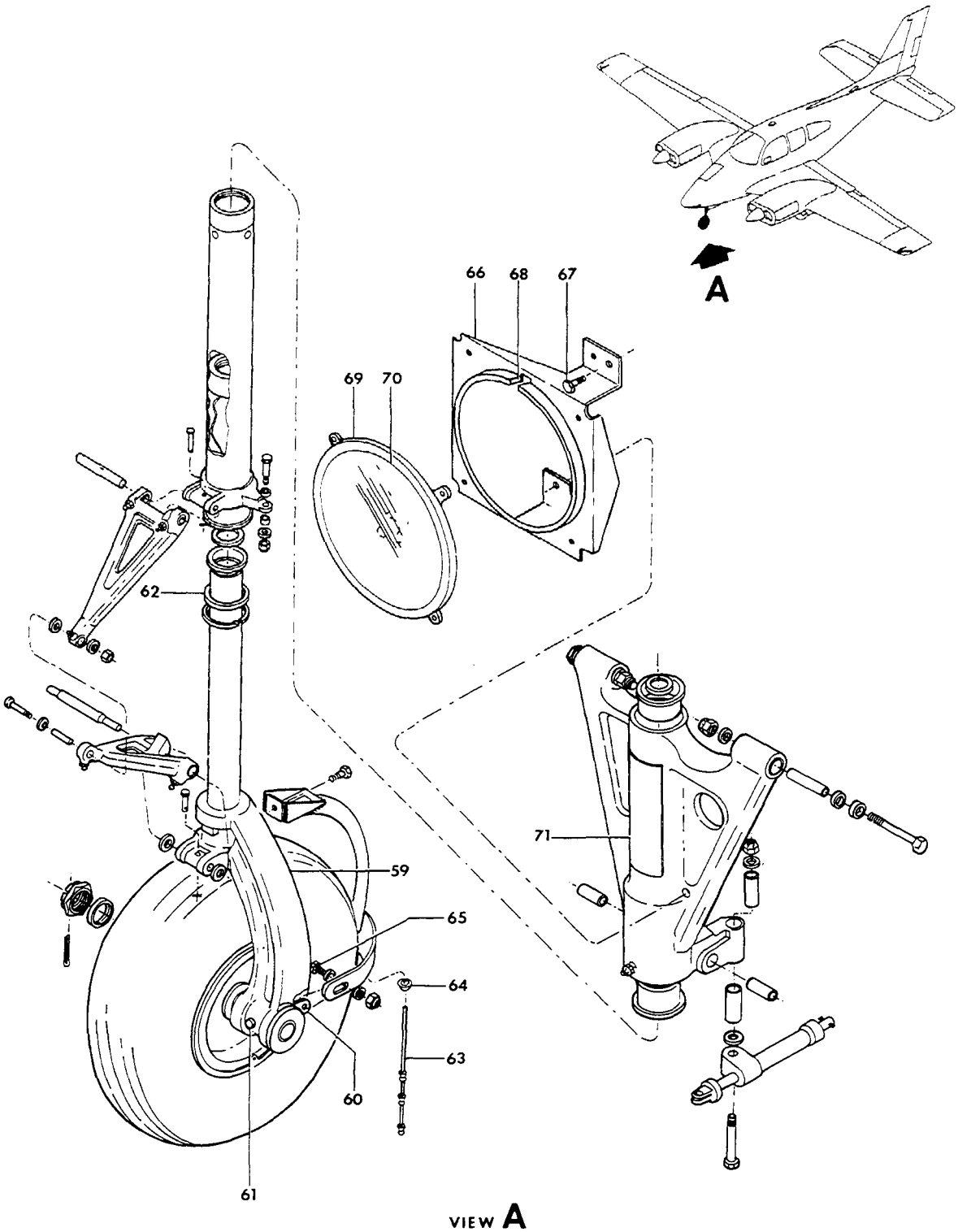

FIGURE 20-10.NOSE LANDING GEAR ASSEMBLY
/SHEET 3 OF 3 SHEETS/

SUB-SECT UNIT & ITEM NO.	PART NO.	DESCRIPTION 1 2 3 4 5 6 7	UNITS PER ASSY	USABLE ON CODE
20-10	35-825195-601	. PISTON & FORK ASSY,NOSE GEAR/WELDED FORK/ . .	1	1
- 59	35-825195-603	. PISTON & FORK ASSY,NOSE GEAR/FORGED FORK/ . .	1	5
- 60	35-820133	. CLIP,STATIC GROUND CABLE.	1	16
		/ATTACHING PARTS/		
- 61	AN4-21A/M/	. BOLT.	1	
	AN960-416	. WASHER.	1	
	MS20365-428	. NUT/SUPERSEDES AN365-428/	1	
		----*----		
- 62	45-825032	. ADAPTER,NOSE GEAR PISTON SCRAPER.	1	6
- 63	35-825196-25	. CABLE ASSY,STATIC GROUND/SUPERSEDES	1	16
		45-361235/		
		/ATTACHING PARTS/		
- 64	694-180702	. NUT	1	
- 65	96-820011	. BOLT.	1	
	AN960-416	. WASHER.	2	
	MS20364-428	. NUT/SUPERSEDES AN364-428/	1	
		----*----		
	96-364012	LIGHT INSTALLATION,NOSE GEAR TAXI	NP	6
	95-364032-1	. BRACKET	1	17
- 66	96-364012-3	. BRACKET	1	18
		/ATTACHING PARTS/		
- 67	AN3A	. BOLT.	3	
	MS20365-1032	. NUT	3	
		----*----		
- 68	112416	. EXTRUSION/13 1/2 IN. LONG/.	1	6
	45-115018	. CLAMP	1	17
- 69	96-364012-5	. CLAMP	1	18
	4570	. BULB.	1	17
- 70	4626	. BULB.	1	18
- 71	96-820010	PLACARD	1	6

CODES OF EFFECTIVITY

1	TC-1 THRU TC-519	2	TC-520 THRU TC-809
3	TC-810 THRU TC-1288	4	TC-1289 THRU TC-1607 TE-1 THRU TE-300
5	TC-520 THRU TC-1607 TE-1 THRU TE-300	6	TC-1 THRU TC-1607 TE-1 THRU TE-300
7	TC-1 THRU TC-1077	8	TC-1078 THRU TC-1607 TE-1 THRU TE-300
9	TC-1 THRU TC-190	10	TC-1 THRU TC-555
11	TC-556 THRU TC-1607 TE-1 THRU TE-300	12	TC-1 THRU TC-205
13	TC-206 THRU TC-1607 TE-1 THRU TE-300	14	TC-1 THRU TC-809
15	TC-810 THRU TC-1607 TE-1 THRU TE-300	16	TC-1 THRU TC-1288 TE-1 THRU TE-300
17	TC-1 THRU TC-889	18	TC-890 THRU TC-1607 TE-1 THRU TE-300

32-20-20
NOSE LANDING GEAR ASSY
TE-301 THRU TE-942 EXCEPT TE-938

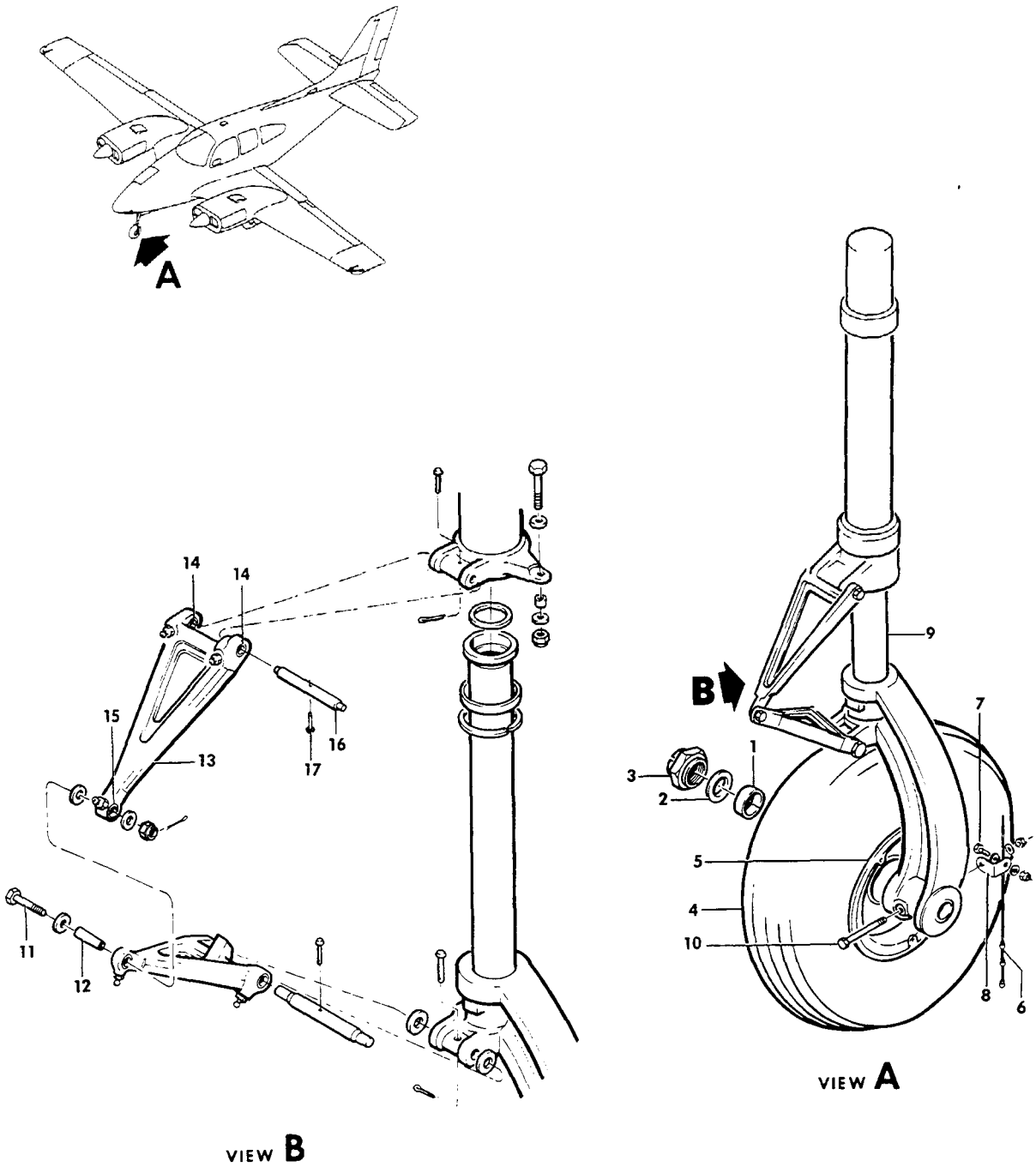

55-206-10

FIGURE 20-20.NOSE LANDING GEAR ASSEMBLY
/SHEET 1 OF 3 SHEETS/

SUB-SECT UNIT & ITEM NO.	PART NO.	DESCRIPTION 1 2 3 4 5 6 7	UNITS PER ASSY	USABLE ON CODE
20-20	96-820000-601	GEAR ASSY,NOSE/COMPLETE/.	1	2
	96-820000-603	GEAR ASSY,NOSE/COMPLETE/.	1	3
	96-820000-605	GEAR ASSY,NOSE/COMPLETE/.	1	4
	96-820000-651	GEAR ASSY,NOSE/LESS TIRE & WHEEL/	1	1
	35-825196-23	. WHEEL,TIRE & TUBE ASSY/BALANCED/.	1	1
		/ATTACHING PARTS/		
- 1	35-825195-35	. BUSHING/SUPERSEDES 95-820000-1/	1	
- 2	95-820000-3	. WASHER.	1	
- 3	AN7502-20	. NUT	1	
	MS24665-359	. PIN,COTTER.	1	
		----*----		
- 4	5.00X5 6P TT	. . TIRE,6 PLY TUBE TYPE.	1	1
	5.00X5	. . TUBE,NOSE GEAR TIRE	1	1
- 5	36-8002-1	. . WHEEL,NOSE GEAR/TUBE TYPE TIRE,SEE.	1	1
		CHAPTER 32-40-10/		
- 6	35-825196-25	. CABLE ASSY,STATIC GROUND.	1	1
		/ATTACHING PARTS/		
- 7	96-820011	. BOLT.	1	
	AN960-416	. WASHER.	1	
	MS20364-428	. NUT	1	
- 8	35-820133	. CLIP,MOUNTING	1	
		----*----		
- 9	96-820016-3	. PISTON AND AXLE ASSY,NOSE GEAR/	1	1
		ORDER 96-820016-15 PISTON & AXLE ASSY/		
	60-820025-9	. . PISTON ASSY/USED WITH 96-820016-3/.	1	1
	60-820025-11	. . PISTON ASSY/USED WITH 96-820016-15/	1	1
	96-820019-1	. . FORK.	1	1
	35-825128-7	. . AXLE ASSY	1	1
		/ATTACHING PARTS/		
- 10	AN4-24A/M/	. . BOLT.	1	
	AN960-416	. . WASHER.	1	
	MS20365-428	. . NUT	1	
		----*----		
	60-820018	. KNEE ASSY,NOSE GEAR UPPER TORQUE.	1	1
		/ATTACHING PARTS/		
- 11	AN4-12/M/	. BOLT.	1	
- 12	105739X-YG0820	. BUSHING	1	
	AN960C516	. WASHER.	2	
	AN960C516L	. WASHER.	2	
	AN960PD516L	. WASHER.	AR	
	AN960-416	. WASHER.	1	
	AN310-4	. NUT	1	
	MS24665-134	. PIN,COTTER.	1	
		----*----		
- 13	60-820018-1	. . KNEE,NOSE GEAR UPPER TORQUE	1	1
- 14	06DU03	. . BUSHING,NOSE GEAR UPPER TORQUE KNEE	2	1
- 15	60-820018-3	. . BUSHING,NOSE GEAR UPPER TORQUE KNEE	1	1
- 16	60-820029-3	. PIN,UPPER KNEE.	1	1
	58-820010	. PIN,UPPER KNEE/USED WITH TAXI LIGHT/.	1	1
		/ATTACHING PARTS/		
- 17	MS20392-1C23	. PIN/SUPERSEDES AN392-23/.	1	
	AN960-4	. WASHER.	AR	
	R AN960-C616	. WASHER/NEXT TO PISTON-AXLE & LOWER KNEE/. . .	2	
	MS24665-132	. PIN,COTTER.	1	
	22K2-048	. NUT,CAP	2	
		----*----		

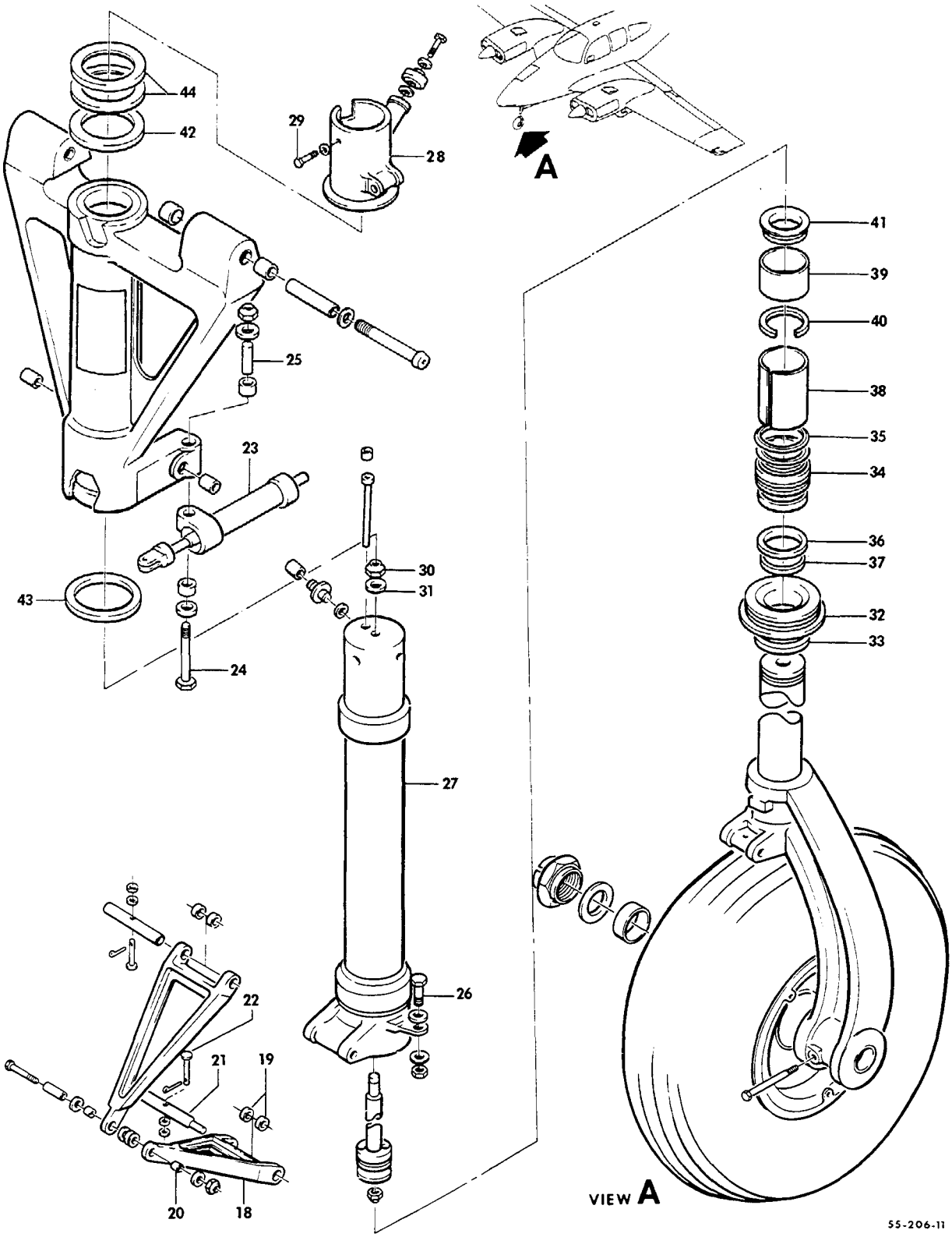

FIGURE 20-20.NOSE LANDING GEAR ASSEMBLY
/SHEET 2 OF 3 SHEETS/

SUB-SECT UNIT & ITEM NO.		PART NO.	DESCRIPTION 1 2 3 4 5 6 7	UNITS PER ASSY	USABLE ON CODE
20-20		96-820020	KNEE ASSY,NOSE GEAR LOWER TORQUE	1	1
	- 18	96-820020-1	KNEE,NOSE GEAR LOWER TORQUE	1	1
	- 19	06DU08	BUSHING,NOSE GEAR LOWER TORQUE KNEE	2	1
	- 20	60-820018-3	BUSHING,NOSE GEAR LOWER TORQUE KNEE	1	1
	- 21	60-820029-1	PIN,LOWER KNEE	1	1
			/ATTACHING PARTS/		
	- 22	MS20392-1C23	PIN/SUPERSEDES AN392-23/	1	
		AN960-4	WASHER	AR	
		AN960C616L	WASHER	2	
		MS24665-132	PIN,COTTER	1	
			——*——		
	- 23	R 35-825145-2	DAMPER ASSY,NOSE LDG SHIMMY/SEE CHAP 32-50-10	1	1
			/ATTACHING PARTS/		
	- 24	AN6-31A/M/	BOLT	1	
		100951X031YN	WASHER	4	
	- 25	105739S-YP1421	BUSHING	1	
		MS20365-624	NUT	1	
	- 26	AN3-6A/M/	BOLT	1	
		AN960-10	WASHER	1	
		AN960-10L	WASHER	1	
		MS20365-1032	NUT	1	
			——*——		
	- 27	R 96-820016-17	HOUSING,NOSE GEAR STRUT	1	1
			SPARES FOR 60-820020-1		
		105740X-ZE0185	BUSHING	1	1
	- 28	96-820018-3	RETAINER,UPPER NOSE GEAR STRUT HOUSING	1	1
			/ATTACHING PARTS/		
	- 29	AN4H4A/M/	BOLT	3	
		AN960-416L	WASHER	3	
	- 30	MS20364-624C	NUT	1	
	- 31	7500-3/8	SEAL,THREAD	1	
			——*——		
	- 32	60-820054-1	RETAINER,LOWER NOSE GEAR STRUT	1	1
	- 33	504270	WIPER,NOSE GEAR	1	1
	- 34	60-820056	BEARING,NOSE GEAR LOWER	1	1
	- 35	AN623D4	O RING,NOSE GEAR	1	1
	- 36	AN6227B30	O RING,NOSE GEAR	1	1
	- 37	B-327N300-9	RING,NOSE GEAR BACKUP	2	1
	- 38	60-820065	SPACER,NOSE GEAR REBOUND TUBE	1	1
	- 39	60-820026	BEARING,NOSE GEAR UPPER	1	6
		60-820026-1	BEARING,NOSE GEAR UPPER	1	7
	- 40	60-820067	RING,SPACER UPPER PISTON BEARING	1	1
	- 41	60-820068	RETAINER,PISTON BEARING UPPER/MATCHED SET	1	1
			USED WITH 96-820016-3 PISTON & AXLE ASSY/		
		60-820067	RING,SPACER UPPER PISTON BEARING/USED	1	1
			WITH 96-820016-15 PISTON & AXLE ASSY/		
	- 42	60-820032-1	WASHER,NOSE GEAR BRACE UPPER	1	1
	- 43	60-820032-3	WASHER,NOSE GEAR BRACE LOWER	1	1
	- 44	60-820032-5	SHIM,NOSE GEAR BRACE UPPER	2	1

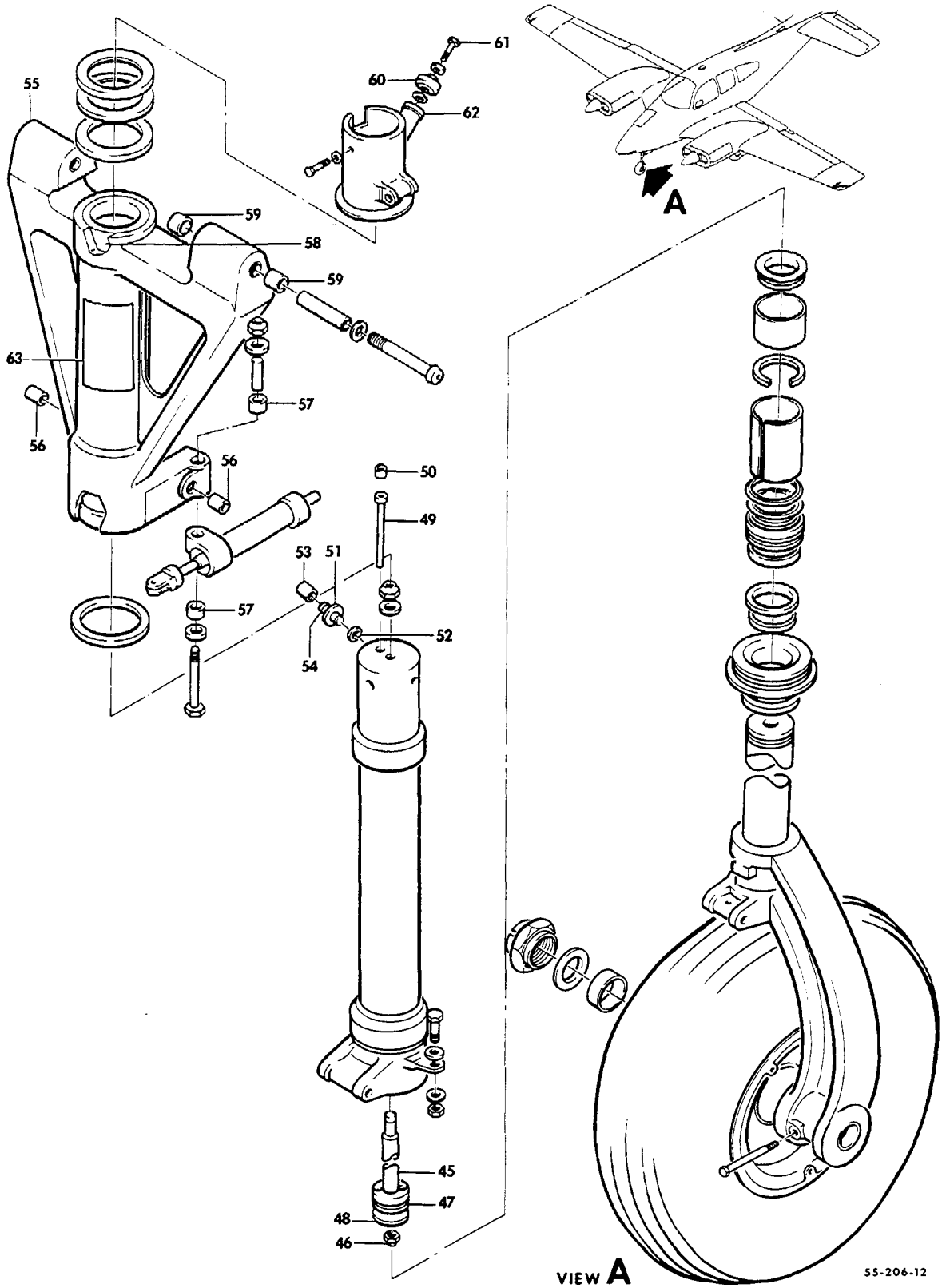

FIGURE 20-20.NOSE LANDING GEAR ASSEMBLY
/SHEET 3 OF 3 SHEETS/

SUB-SECT UNIT & ITEM NO.	PART NO.	DESCRIPTION 1 2 3 4 5 6 7	UNITS PER ASSY	USABLE ON CODE
20-20	60-820051-5	. ROD ASSY,NOSE GEAR ORIFICE.	1	1
- 45	60-820051-11	. . ROD,REBOUND CONTROL	1	1
		/ATTACHING PARTS/		
	AN960-616L	. . WASHER.	1	
- 46	MS20364-624C	. . NUT	1	
		----*----		
- 47	R 60-820051-7	. . ORIFICE,NOSE GEAR	1	1
- 48	60-384016-3	. . RING,NOSE GEAR ORIFICE ROD.	1	1
	MS28775-025	. . PACKING,NOSE GEAR ORIFICE ROD RING.	1	1
- 49	60-820064-1	. TUBE,NOSE GEAR FILL/SUPERSEDES 60-820064/ . .	1	1
- 50	9-1406-45	. PLUG,NOSE GEAR FILL TUBE.	1	1
- 51	35-820125	. VALVE BODY,AIR.	1	1
- 52	AN622786	. O RING,AIR VALVE.	1	1
- 53	MS20813-1	. CAP,AIR VALVE	1	1
- 54	302D	. CORE,VALVE/SUPERSEDES AN809-1/.	1	1
	96-820029-7	. BRACE ASSY,NOSE GEAR.	1	1
- 55	96-820029-5	. . BRACE,NOSE GEAR	1	1
- 56	105740X-YD0500	. . BUSHING,NOSE GEAR BRACE LOWER	2	1
- 57	105740X-YN0400	. . BUSHING,NOSE GEAR BRACE LOWER	2	1
- 58	60-820039	. . BUSHING,NOSE GEAR BRACE	2	1
- 59	08DU10	. . BUSHING,NOSE GEAR BRACE UPPER	4	1
- 60	NAS505-4J	. BEARING,NOSE GEAR STEERING STRAIGHTENER . . .	1	1
		/ATTACHING PARTS/		
- 61	NAS222-20	. SCREW	1	
	AN960-416L	. WASHER.	2	
- 62	100951X250V3	. SPACER.	1	
	S1452-048	. NUT	1	
		----*----		
- 63	96-820031	PLACARD,NOSE GEAR SHOCK ABSORBER.	1	2
	96-820032	PLACARD,NOSE GEAR SHOCK ABSORBER.	1	8

CODES OF EFFECTIVITY

1	TE-301 THRU TE-942 EXCEPT TE-938	2	TE-301 THRU TE-405
3	TE-406 THRU TE-767	4	TE-768 THRU TE-942 EXCEPT TE-938
5	TE-301 THRU TE-767	6	TE-301 THRU TE-600
7	TE-601 THRU TE-942 EXCEPT TE-938	8	TE-406 THRU TE-942 EXCEPT TE-938

32-20-30
NOSE LANDING GEAR DOOR ASSY

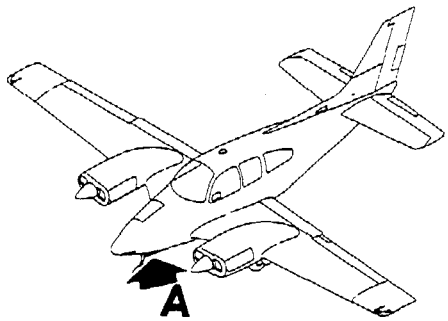

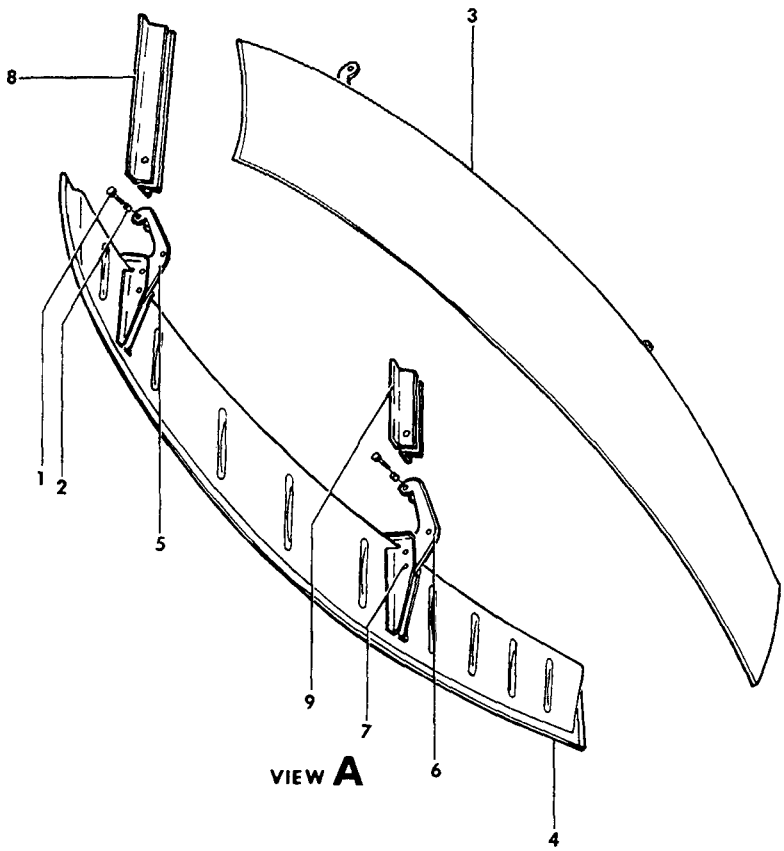

55-208-2

FIGURE 20-30.NOSE LANDING GEAR DOOR

ATA CODE & INDEX NO.	PART NO.	DESCRIPTION 1 2 3 4 5 6 7	UNITS PER ASSY	USABLE ON CODE
20-30	95-410031-19	DOOR ASSY,NOSE GEAR LH.	1	2
	96-410024-1	DOOR ASSY,NOSE GEAR LH.	1	3
	95-410031-20	DOOR ASSY,NOSE GEAR RH.	1	2
	96-410024-2	DOOR ASSY,NOSE GEAR RH.	1	3
		/ATTACHING PARTS/		
- 1	AN3-6A/M/	BOLT.	2	
- 2	105739S-ZG0250	BUSHING	2	
	AN960-10	WASHER.	2	
	MS20365-1032	NUT	2	
		——*——		
- 3	95-410031-601	. DOOR ASSY,NOSE GEAR LH/LESS HINGE/.	1	2
	96-410024-601	. DOOR ASSY,NOSE GEAR LH/LESS HINGE/.	1	3
- 4	95-410031-602	. DOOR ASSY,NOSE GEAR RH/LESS HINGE/.	1	2
	96-410024-602	. DOOR ASSY,NOSE GEAR RH/LESS HINGE/.	1	3
- 5	95-410031-17	. HINGE,NOSE GEAR DOOR FWD.	1	2
	96-410024-9	. HINGE,NOSE GEAR DOOR FWD.	1	3
- 6	35-410077-12	. HINGE,NOSE GEAR DOOR AFT.	1	1
		/ATTACHING PARTS/		
- 7	AN525-8	. SCREW	4	
	AN960-8	. WASHER.	4	
	MS20365-832	. NUT	4	
		——*——		
- 8	95-410030-45	ANGLE,FWD NOSE GEAR DOOR HINGE.	2	1
- 9	95-410030-93	ANGLE,AFT NOSE GEAR DOOR HINGE.	2	1

CODES OF EFFECTIVITY

1 TC-1 THRU TC-1607
TE-1 THRU TE-942
EXCEPT TE-938

2 TC-1 THRU TC-1607
TE-1 THRU TE-300

3 TE-301 THRU TE-942
EXCEPT TE-938

"END"

32-30-01
MAIN LANDING GEAR RETRACT MECHANISM

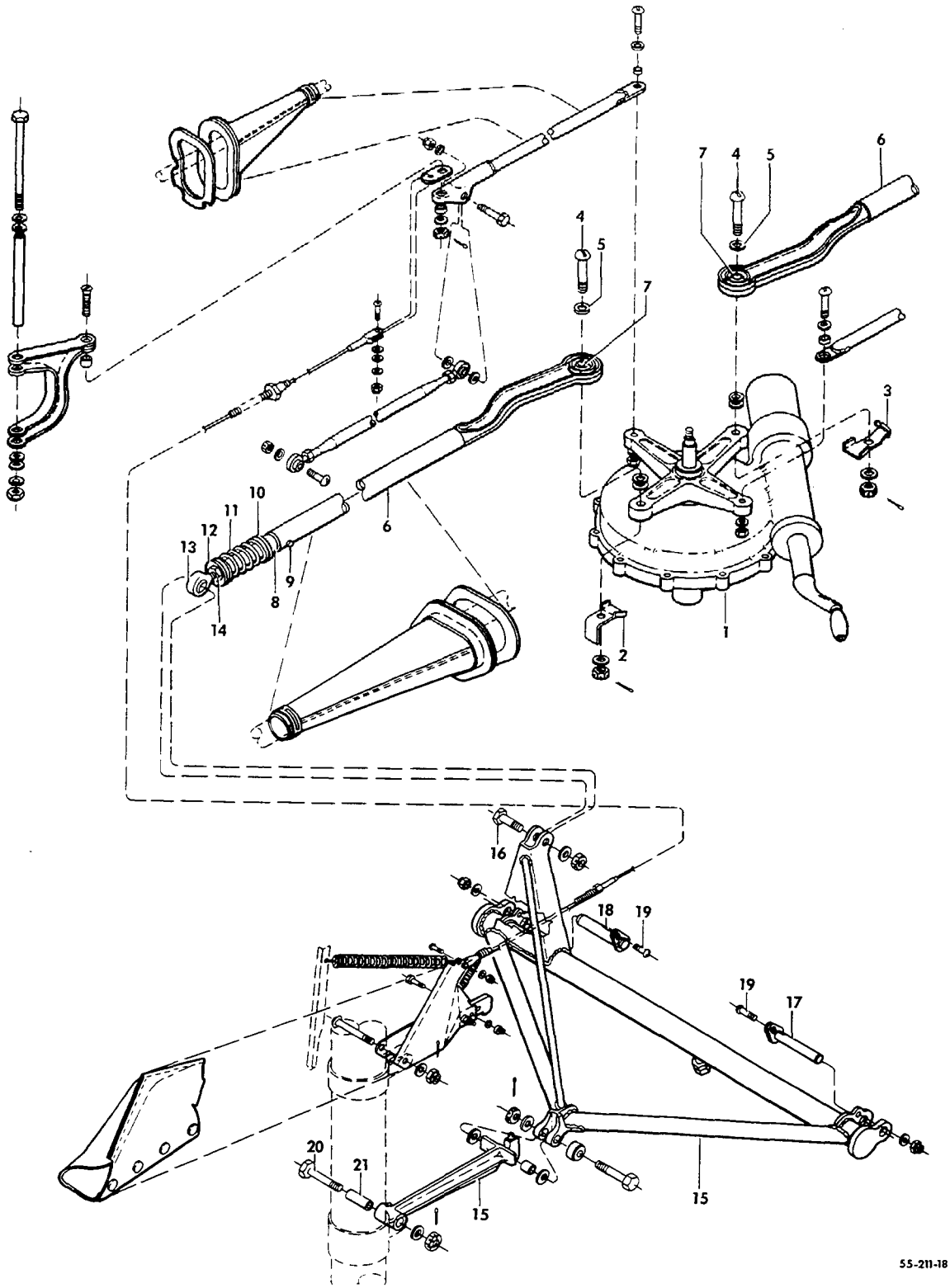

FIGURE 30-01.LANDING GEAR RETRACT MECHANISM
/SHEET 1 OF 4 SHEETS/

ATA CODE & INDEX NO.	PART NO.	DESCRIPTION 1 2 3 4 5 6 7	UNITS PER ASSY	USABLE ON CODE
30-01	95-810005	RETRACT MECHANISM INSTL,MAIN LANDING GEAR . . .	NP	1
	95-810017	. ACTUATOR ASSY,MAIN LANDING GEAR RETRACT . . .	1	12
- 1	95-810017-5	. ACTUATOR ASSY,MAIN LANDING GEAR RETRACT . . .	NP	13
		ORDER 95-810017-11/SEE CHAPTER 32-30-20/		
	95-810017-11	. ACTUATOR ASSY,MAIN LANDING GEAR RETRACT . . .	1	13
		/SEE CHAPTER 32-30-20/		
		/ATTACHING PARTS/		
	35-810097	. STUD.	4	
	AN960-416	. WASHER.	4	
	MS20365-420	. NUT	4	
		——*——		
- 2	35-364127	. ACTUATOR,LANDING GEAR UP SWITCH	1	1
- 3	35-364130	. ACTUATOR ASSY,LANDING GEAR DOWN LIMIT SWITCH.	1	1
	35-815125-2	. ROD ASSY,MAIN GEAR RETRACT LH	1	1
	35-815125-4	. ROD ASSY,MAIN GEAR RETRACT RH	1	1
		/ATTACHING PARTS/		
- 4	AN26-23/M/	. BOLT.	1	
- 5	AN960-616	. WASHER.	2	
	AN320-6	. NUT	1	
	AN380-3-2	. PIN,COTTER.	1	
		——*——		
	35-815125-602	. . BRAZE ASSY,ROD LH	1	1
	35-815125-604	. . BRAZE ASSY,ROD RH	1	1
- 6	35-815125-12	. . . BRAZE ASSY,ROD LH	1	1
	35-815125-14	. . . BRAZE ASSY,ROD RH	1	1
- 7	LS6	. . . BEARING	1	1
- 8	35-815131	. . PLUNGER ASSY.	1	1
		/ATTACHING PARTS/		
- 9	AN394-33	. . PIN	1	
	AN960D416L	. . WASHER.	1	
	AN380-2-2	. . PIN,COTTER.	1	
		——*——		
- 10	100951S063XP	. . WASHER,LH	4	1
	100951S063XP	. . WASHER,RH	3	1
- 11	45-815091	. . SPRING.	1	1
- 12	100951S063YU	. . WASHER.	1	1
- 13	HM6FG	. . END,ROD	1	1
- 14	AN316-6R	. . NUT	1	1
- 15	35-815155-610	. BRACE ASSY,MAIN LANDING GEAR RETRACT LH . . .	1	1
	35-815155-611	. BRACE ASSY,MAIN LANDING GEAR RETRACT RH . . .	1	1
		/ATTACHING PARTS/		
- 16	AN6-11A/M/	. BOLT.	1	
	AN960-616	. WASHER.	1	
	AN365-624	. NUT	1	
- 17	35-815120	. PIN ASSY,LANDING GEAR RETRACT BRACE AFT . . .	1	
- 18	35-815123-10	. PIN ASSY,LANDING GEAR RETRACT BRACE FWD . . .	1	
- 19	AN515-8-8	. SCREW	2	
	AN960-8	. WASHER.	2	
	MS20365-832	. NUT/SUPERSEDES AN365-832/	2	
- 20	AN5-22	. BOLT.	1	2
	NAS4645-33/M/	. BOLT.	1	3
- 21	35-815124	. BUSHING	1	
	AN960-516	. WASHER.	1	
	AN320-5	. NUT	1	
	AN380-2-2	. PIN,COTTER.	1	
		——*——		

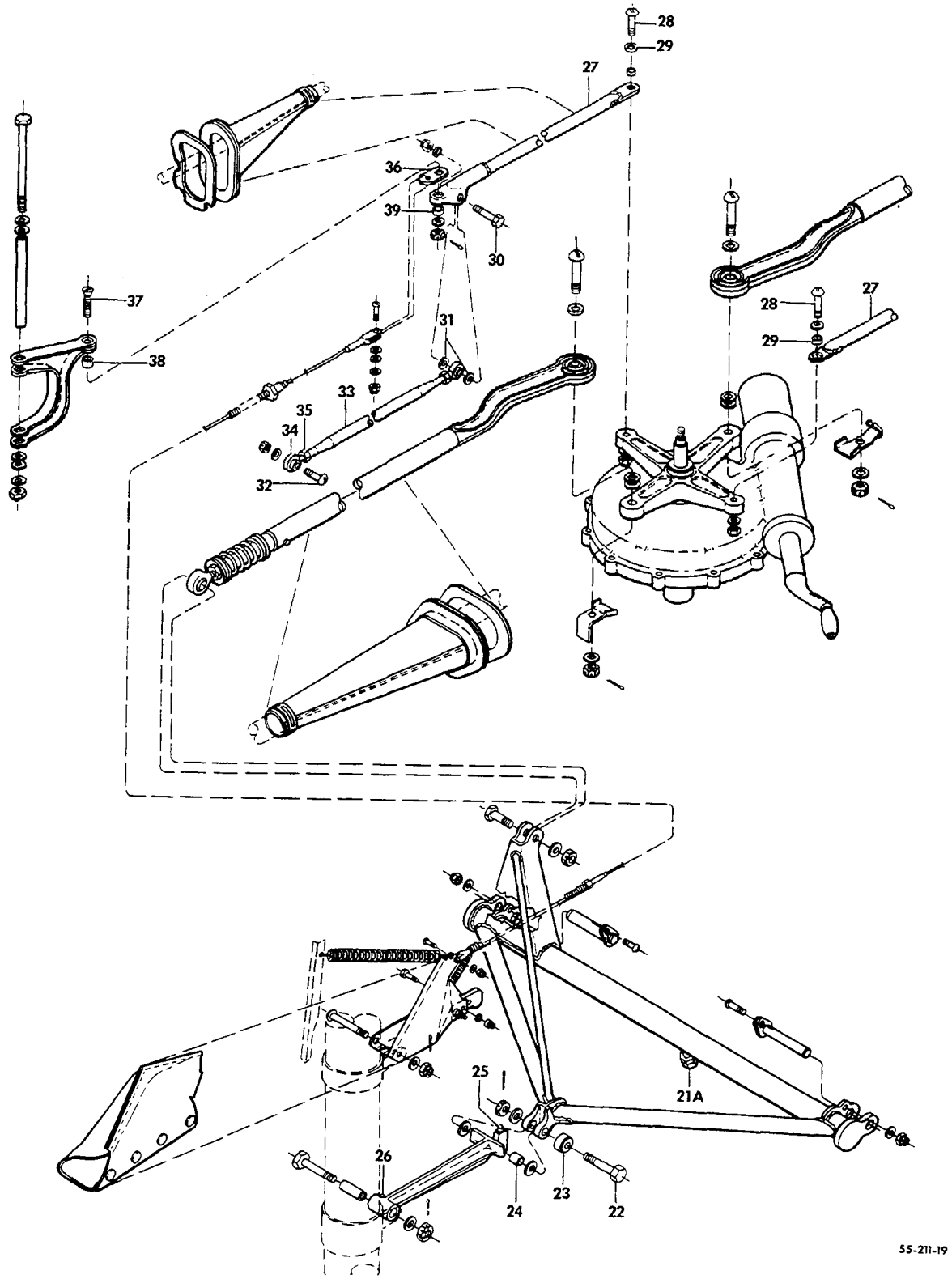

FIGURE 30-01.LANDING GEAR RETRACT MECHANISM
/SHEET 2 OF 4 SHEETS/

ATA CODE & INDEX NO.	PART NO.	DESCRIPTION 1 2 3 4 5 6 7	UNITS PER ASSY	USABLE ON CODE
30-01	35-815102-20	. . BRACE ASSY,LH/ORDER 35-815155-610/.	NP	1
	35-815102-21	. . BRACE ASSY,RH/ORDER 35-815155-611/.	NP	1
- 21A	1059824A12-002	. . BOLT.	1	1
	AN316-4R	. . NUT	1	1
	35-815129	. . LEG ASSY,MAIN GEAR RETRACT/ORDER. . . . . 35-815155-610 RH OR 35-815155-611 RH/	NP	1
		/ATTACHING PARTS/		
- 22	NAS464-5-23/M/	. . BOLT.	1	
- 23	NAS505-5J	. . BEARING,UPLOCK.	1	
- 24	35-810122-1	. . BUSHING	1	
	AN960-716	. . WASHER.	2	
	AN960-516L	. . WASHER.	1	
	AN320-5/M/	. . NUT	1	
	MS24665-132	. . PIN,COTTER.	1	
		——*——		
- 25	1729	. . FITTING,LUBRICATION	1	1
- 26	MS15001-2	. . FITTING,LUBRICATION	1	1
- 27	45-815003-3	. ROD ASSY,LANDING GEAR DOOR ACTUATOR LH. . . .	1	1
	45-815003-1	. ROD ASSY,LANDING GEAR DOOR ACTUATOR RH. . . .	1	1
		/ATTACHING PARTS/		
- 28	AN24-16/M/	. BOLT.	1	
	AN960-416	. WASHER.	2	
- 29	35-815101-2	. BUSHING/OR 58-810015-1/	1	4
		——*——		
	58-810015-1	. BUSHING	1	5
		/ATTACHING PARTS/		
	AN310-4	. NUT	1	
	MS24665-132	. PIN,COTTER.	1	
		——*——		
	35-815007-4	. LINK ASSY,MAIN GEAR DOOR.	2	1
		/ATTACHING PARTS/		
- 30	AN4-12A/M/	. BOLT.	1	
	AN960-416	. WASHER.	1	
- 31	102933S5ZL0125	. SPACER.	2	
	AN365-428	. NUT	1	
- 32	AN24-15/M/	. BOLT.	1	
	AN960-416L	. WASHER.	1	
	AN320-4	. NUT	1	
	MS24665-132	. PIN,COTTER.	1	
		——*——		
- 33	35-815007-6	. . TUBE.	1	1
- 34	HM4	. . END,ROD	2	1
- 35	AN316-4R	. . NUT	2	1
- 36	35-815078	. LINK,MAIN LANDING GEAR UP LOCK CABLE.	1	1
		/ATTACHING PARTS/		
- 37	AN24-14/M/	. BOLT.	1	6
	35-815183	. SCREW	1	7
- 38	105739D-ZT0250	. BUSHING	1	7
- 39	105739S-YA0137	. BUSHING	1	6
	105739S-ZE0137	. BUSHING	1	7
	AN960-416L	. WASHER.	1	6
	100951S063WZ	. WASHER.	1	6
	AN960-10	. WASHER.	1	7
	AN320-4/M/	. NUT	1	6
	AN310-3	. NUT	1	7
	MS24665-132	. PIN,COTTER.	1	1
		——*——		

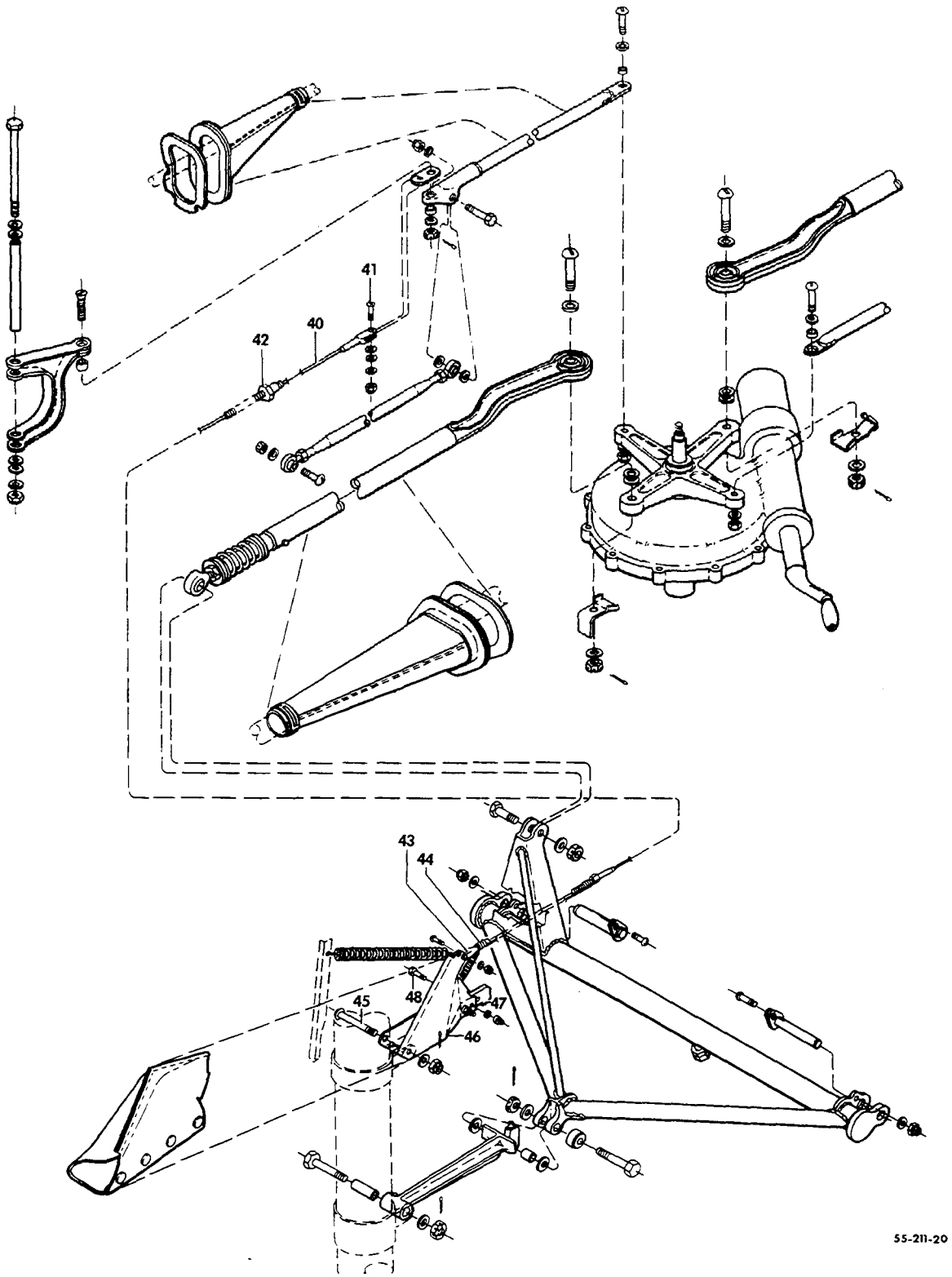

FIGURE 30-01.LANDING GEAR RETRACT MECHANISM
/SHEET 3 OF 4 SHEETS/

ATA CODE & INDEX NO.	PART NO.	DESCRIPTION 1 2 3 4 5 6 7	UNITS PER ASSY	USABLE ON CODE
30-01 - 40	35-815109	CABLE ASSY,MAIN GEAR UP LOCK.	1	1
		/ATTACHING PARTS/		
- 41	AN23-10/M/	BOLT.	2	
	AN960-10	WASHER.	1	
	AN960-10L	WASHER.	1	
	AN310-3	NUT	2	
	MS24665-132	PIN,COTTER.	2	
- 42	S123	BUSHING	2	1
	AN960-616	WASHER.	2	1
	MS20365-624	NUT/SUPERSEDES AN365-624/	2	1
	AN742-4	CLAMP	4	1
		/ATTACHING PARTS/		
	AN520-10-8	SCREW	1	
	AN515-8-8	SCREW,RH.	1	
	AN960-10	WASHER.	1	
	AN960-8	WASHER,RH	1	
	MS20365-1032	NUT,RH.	1	
	MS21042L3	NUT	1	
	791-2-4	CLIP,LH	2	1
		/ATTACHING PARTS/		
	AN520-10-10	SCREW	1	
	AN520-10-7	SCREW	1	
	AN960-10	WASHER.	2	
	MS20365-1032	NUT	2	
- 43	AN665-10R	TERMINAL.	1	1
- 44	35-815101-5	SLEEVING.	1	1
		/ATTACHING PARTS/		
	MS17821-4-9	CABLE TIE	1	
	35-815077-8	UPLOCK ASSY,MAIN LANDING GEAR LH.	1	8
	35-815077-12	UPLOCK ASSY,MAIN LANDING GEAR LH.	1	9
	35-815077-9	UPLOCK ASSY,MAIN LANDING GEAR RH.	1	8
	35-815077-13	UPLOCK ASSY,MAIN LANDING GEAR RH.	1	9
		/ATTACHING PARTS/		
- 45	AN24-32/M/	BOLT.	1	
	AN960-416L	WASHER.	1	
	AN310-4	NUT	1	
	MS24665-132	PIN,COTTER.	1	
- 46	35-815077-10	. BRACKET,UPLOCK LH	1	8
	35-815077-14	. BRACKET,UPLOCK LH	1	9
	35-815077-11	. BRACKET,UPLOCK RH	1	8
	35-815077-15	. BRACKET,UPLOCK RH	1	9
- 47	35-815077-4	. BLOCK,UPLOCK LH	1	1
	35-815077-5	. BLOCK,UPLOCK RH	1	1
		/ATTACHING PARTS/		
- 48	AN3-5A/M/	. BOLT.	2	
	AN960-10	. WASHER.	2	
	AN365-1032	. NUT	2	

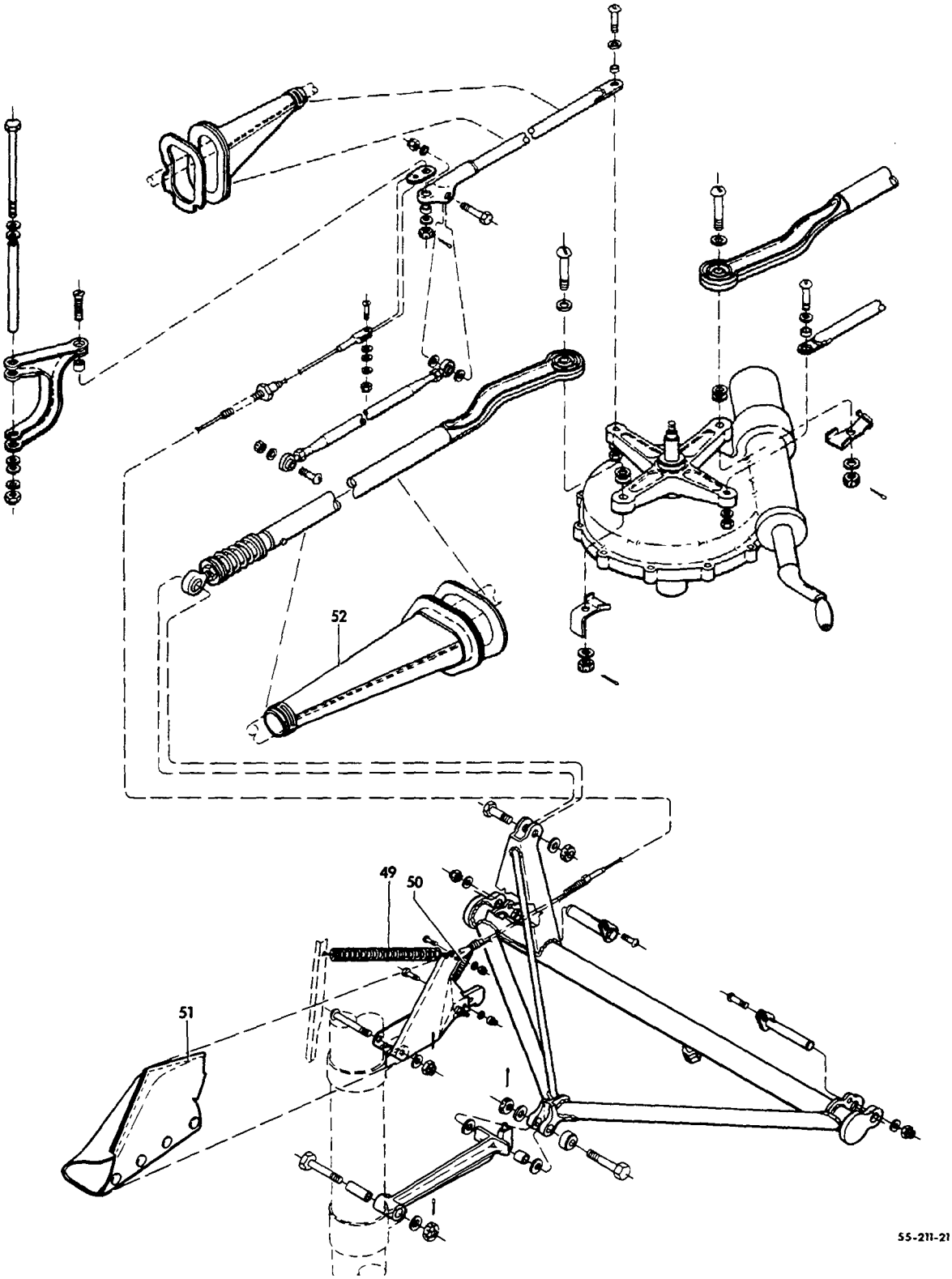

FIGURE 30-01.LANDING GEAR RETRACT MECHANISM
/SHEET 4 OF 4 SHEETS/

SUB-SECT UNIT & ITEM NO.	PART NO.	1 2 3 4 5 6 7 DESCRIPTION	UNITS PER ASSY	USABLE ON CODE
30-01 - 49	35-815115	. . SPRING,MAIN LANDING GEAR UPLOCK	1	1
- 50	100942C0020-31	. . SPRING,TENSION.	1	1
- 51	35-815156-4	. . BOOT ASSY,LANDING GEAR UPLOCK LH.	1	1
	35-815156-5	. . BOOT ASSY,LANDING GEAR UPLOCK RH.	1	1
- 52	95-420011-155	BOOT,LANDING GEAR RETRACT ROD	1	1
	60-810081-1	DECAL,INSTRUCTION UPLOCK CABLE BOLT	1	1
	55-8007-3S	KIT,DOWNLOCK INSTL.	1	10
	55-8007-1S	KIT,DOWNLOCK INSTL.	1	11
	R 45-815116-2	ARM,LANDING GEAR RETRACT ACTUATOR IDLER	2	6

CODES OF EFFECTIVITY

1 TC-1 THRU TC-1607
TE-1 THRU TE-942
EXCEPT TE-938

2 TC-1 THRU TC-354
EXCEPT TC-344

3 TC-344 AND
TC-355 THRU TC-1607
TE-1 THRU TE-942
EXCEPT TE-938

4 TC-1 THRU TC-1529
TE-1 THRU TE-905

5 TC-1530 THRU TC-1607
TE-906 THRU TE-942
EXCEPT TE-938

6 TC-1 THRU TC-1298
TE-1 THRU TE-767

7 TC-1299 THRU TC-1607
TE-768 THRU TE-942
EXCEPT TE-938

8 TC-1 THRU TC-1607
TE-1 THRU TE-767

9 TE-768 THRU TE-942
EXCEPT TE-938

10 TC-1 THRU TC-354
EXCEPT TC-251,TC-344
AND TC-350

11 TC-251,TC-344
AND TC-350
TC-355 THRU TC-1392
TC-1397 THRU TC-1607
EXCEPT TC-1402
TE-1 THRU TE-942
EXCEPT TE-938 & TE-50

12 TC-1 THRU TC-240

13 TC-241 THRU TC-1607
TE-1 THRU TE-942
EXCEPT TE-938

"END"

32-30-10
NOSE LANDING GEAR RETRACT MECHANISM

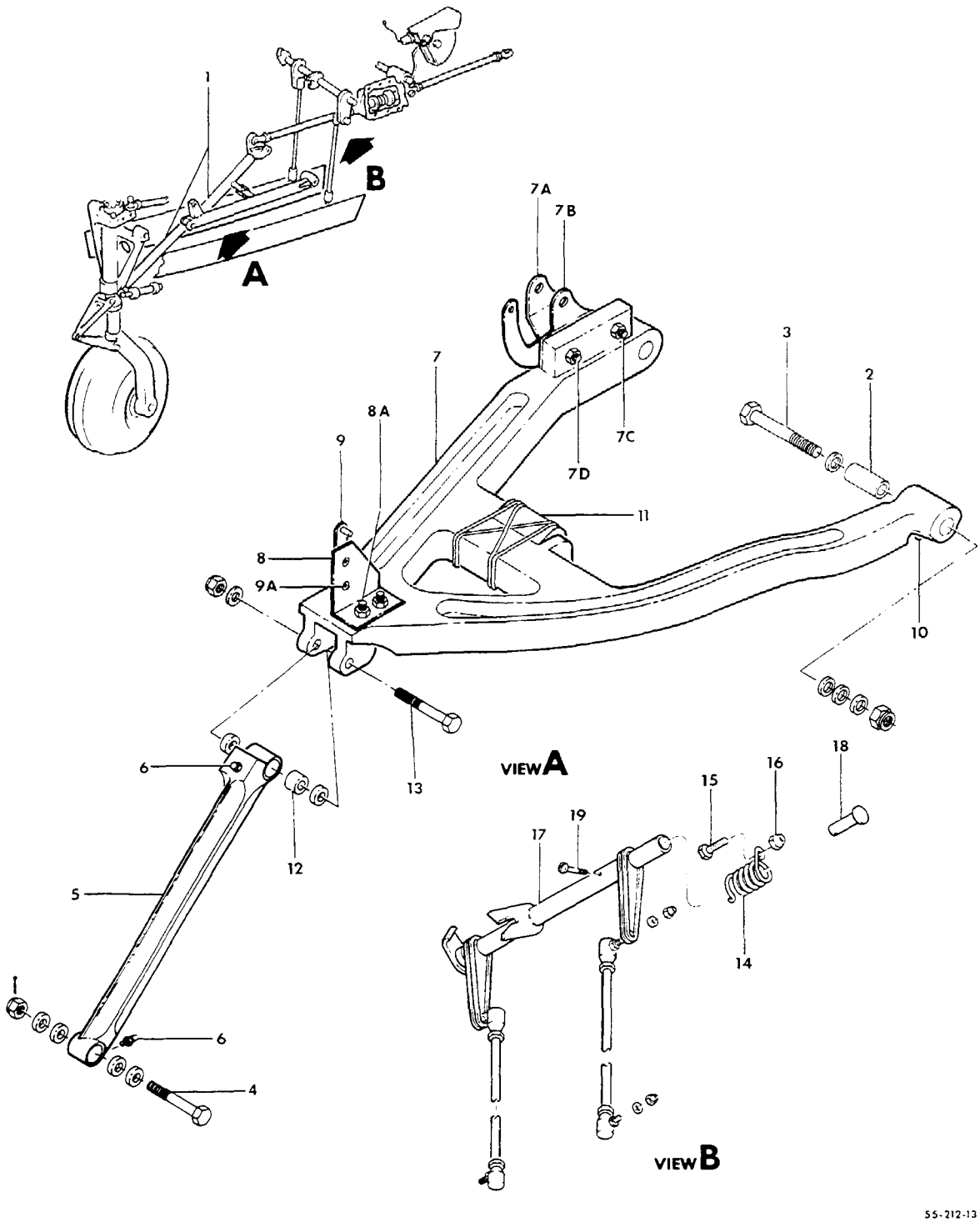

FIGURE 30-10. NOSE LANDING GEAR RETRACT MECHANISM/SHEET 1 OF 3 SHEETS/

SUB-SECT UNIT & ITEM NO.		PART NO.	DESCRIPTION 1 2 3 4 5 6 7	UNITS PER ASSY	USABLE ON CODE
30-10		95-820006	RETRACT MECHANISM INSTL,NOSE GEAR	NP	1
		95-820006-3	RETRACT MECHANISM INSTL,NOSE GEAR	NP	2
		96-820012	RETRACT MECHANISM INSTL,NOSE GEAR	NP	3
	R	95-824018-3	. BRACE ASSY,NOSE GEAR RETRACT/ORDER KIT. . . .	NP	
			35-4012-1 FOR SPARES/		
	R	35-4012-1	. KIT,NOSE GEAR DRAG LEG.	1	
- 1	R	002-820018-3	. . BRACE ASSY,NOSE GEAR RETRACT.	1	
			/ATTACHING PARTS/		
- 2	R	35-825123-9	. . BUSHING	2	
- 3	R	AN6-30A/M/	. . BOLT.	2	
	R	AN960-616	. . WASHER.	AR	
	R	AN960-616L	. . WASHER.	AR	
	R	130909N25	. . NUT	2	
- 4	R	AN6-36A	. . BOLT.	1	
	R	AN960-616	. . WASHER.	4	
	R	AN310-6	. . NUT	1	
	R	AN380-2-3	. . PIN,COTTER.	1	
- 5	R	002-820017-1	. . . LEG ASSY,NOSE GEAR RETRACT DRAG	1	
- 6	R	MS15002-1	. . . . FITTING,LUBE.	1	
- 7	R	002-820016-31	. . . BRACE ASSY,NOSE GEAR AFT DRAG	1	
- 7A	R	002-820016-27	. . . . ARM,OUTBD	1	
- 7B	R	002-820016-29	. . . . ARM,INBD.	1	
- 7C	R	130909B20	. . . . BOLT.	2	
- 7D	R	AN4-11A	. . . . BOLT.	2	
- 8	R	002-820016-9	. . . . BRACKET,DOOR ACTUATOR/PIN SUPPORT/. . .	1	
- 8A	R	130909B24	. . . . BOLT.	2	
- 9	R	002-820016-39	. . . . PIN ASSY,DOOR ACTUATOR.	1	
- 9A	R	MS24694S51	. . . . SCREW	2	
	R	AN960D10	. . . . WASHER.	6	
	R	MS21042L3	. . . . NUT	6	
- 10	R	MS15002-1	. . . . FITTING,LUBE.	2	
	R	NAS75-8-104	. . . . BUSHING/PRESS FIT/.	2	
- 11	R	002-820016-41	. . . . BUMPER/SPARES FOR 002-820016-11/. . . .	1	
- 12	R	NAS72-5-011	. . . BUSHING	1	
- 13	R	AN175-17A	. . . BOLT.	1	
	R	MS21042L5	. . . NUT	1	
- 14	R	35-825074-1	. SPRING,NOSE GEAR RETRACT.	1	
			/ATTACHING PARTS/		
- 15	R	AN515-8R8	. SCREW	1	
- 16	R	MS20365-832	. NUT	1	
- 17		95-820006-1	. SHAFT ASSY,NOSE GEAR DOOR ACTUATOR.	1	5
		96-820034	. SHAFT ASSY,NOSE GEAR DOOR ACTUATOR.	1	6
			/ATTACHING PARTS/		
- 18		45-825078-1	. END,NOSE GEAR DOOR ACTUATOR SHAFT	2	
- 19		AN515-8R14	. SCREW	2	
		MS20365-832	. NUT	2	

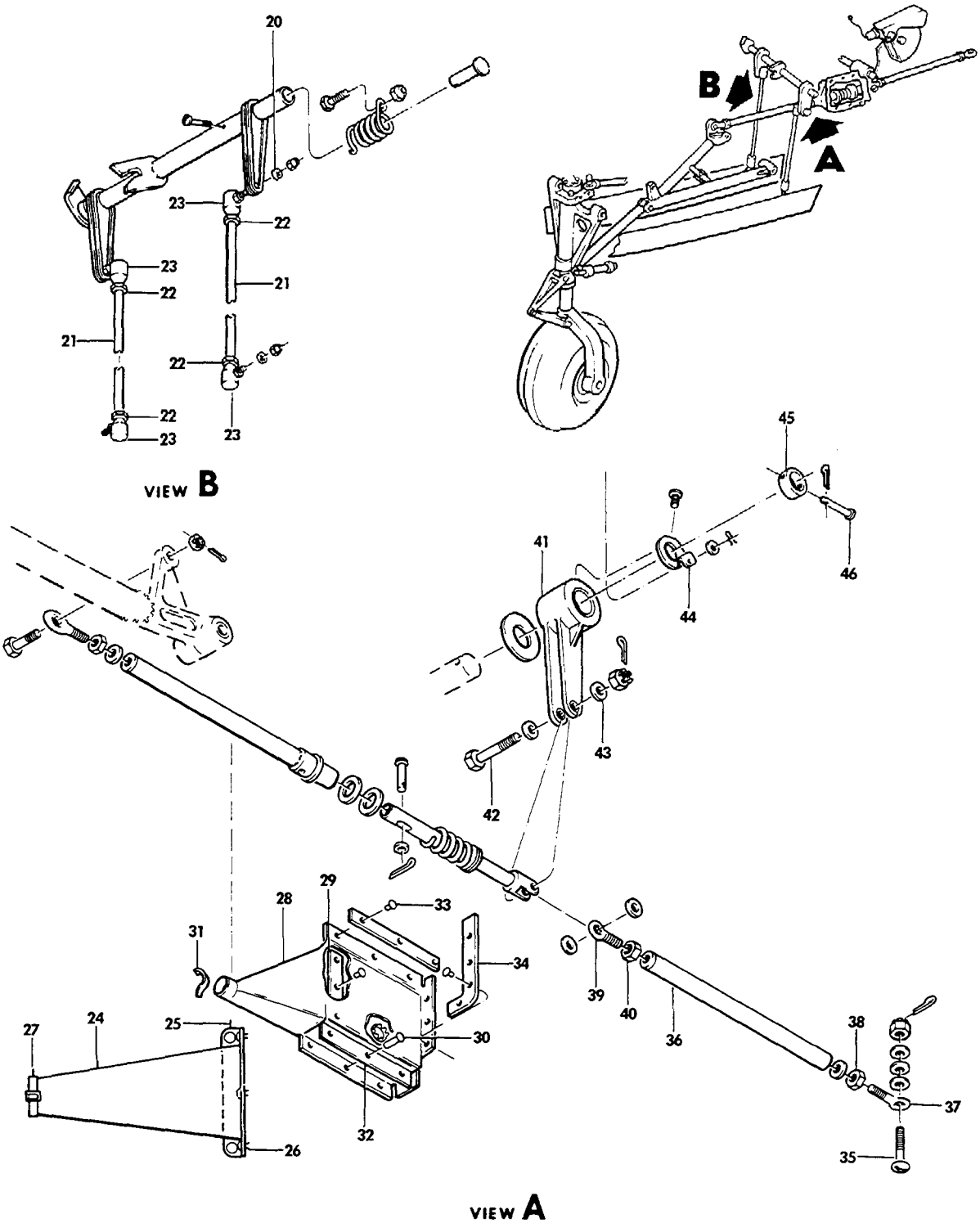

FIGURE 30-10.NOSE LANDING GEAR RETRACT MECHANISM/SHEET 2 OF 3 SHEETS/

ATA CODE & INDEX NO.	PART NO.	DESCRIPTION 1 2 3 4 5 6 7	UNITS PER ASSY	USABLE ON CODE
30-10	35-825191-1	ROD ASSY,NOSE GEAR DOOR ACTUATOR LH	1	
	35-825191-3	ROD ASSY,NOSE GEAR DOOR ACTUATOR RH	1	
		/ATTACHING PARTS/		
- 20	AN960-10	WASHER	4	
	MS20364-1032	NUT	2	
		——+——		
- 21	35-825191-5	ROD,LH	1	
	35-825191-7	ROD,RH	1	
- 22	AN315-3R	NUT	2	
- 23	B40-1	BALL JOINT	2	
- 24	96-820012-1	BOOT,NOSE GEAR RETRACT ROD	1	3
		/ATTACHING PARTS/		
- 25	96-820012-3	RING,BOOT RETAINING	1	
- 26	49338	STUD	8	
- 27	1/4 X 8	WRAPLOCK	1	
		——+——		
- 28	35-825076-1	BOOT,NOSE GEAR RETRACT ROD	1	7
	002-820014-1	BOOT,NOSE GEAR RETRACT ROD	1	8
		/ATTACHING PARTS/		
- 29	35-825078	STRIP,RETRACT ROD BOOT ATTACH	1	7
	002-820015-1	STRIP,RETRACT ROD BOOT ATTACH	1	8
- 30	49338	STUD	14	
	49338	STUD	10	8
- 31	1/4 X 8	WRAPLOCK	1	7
	TY28M	CABLE,TIE	1	8
- 32	35-825081	STRIP,RETRACT ROD BOOT ATTACH SIDE	2	7
	002-820013-1	COVER,RETRACT ROD BOOT ATTACH SIDE	1	8
- 33	AN525-10R6	SCREW	3	8
	AN960PD10L	WASHER	3	8
- 34	35-825077	STRIP,RETRACT ROD BOOT ATTACH AFT	1	7
		——+——		
	35-825185-18	ROD ASSY,NOSE GEAR RETRACT AFT	1	
		/ATTACHING PARTS/		
- 35	AN26-28/M/	BOLT	1	
	AN960-616	WASHER	1	
	AN960-616L	WASHER	2	
	MS17826-6	NUT	1	
	MS24665-132	PIN,COTTER	1	
		——+——		
- 36	36-820011-9	TUBE	1	
- 37	HMXL6FG	END,ROD	1	
	AN960-716L	WASHER	1	
- 38	AN316-7L	NUT	1	
- 39	HMX5FG	END,ROD	1	
	AN960-616L	WASHER	1	
- 40	AN316-6R	NUT	1	
- 41	35-820094	ARM ASSY,NOSE GEAR RETRACT IDLER	1	
		/ATTACHING PARTS/		
- 42	AN25-22/M/	BOLT	1	
- 43	100951CR016YF	WASHER	2	
	AN960-516L	WASHER	2	
	AN320-5/M/	NUT	1	
	MS24665-132	PIN,COTTER	1	
- 44	35-825111	BRACKET,GEAR POSITION INDICATOR	1	
- 45	35-820095	COLLAR	1	
	100951S031XW	WASHER	1	
- 46	MS20392-1C37	PIN,FLATHEAD	1	
	MS24665-132	PIN,COTTER	1	
		——+——		

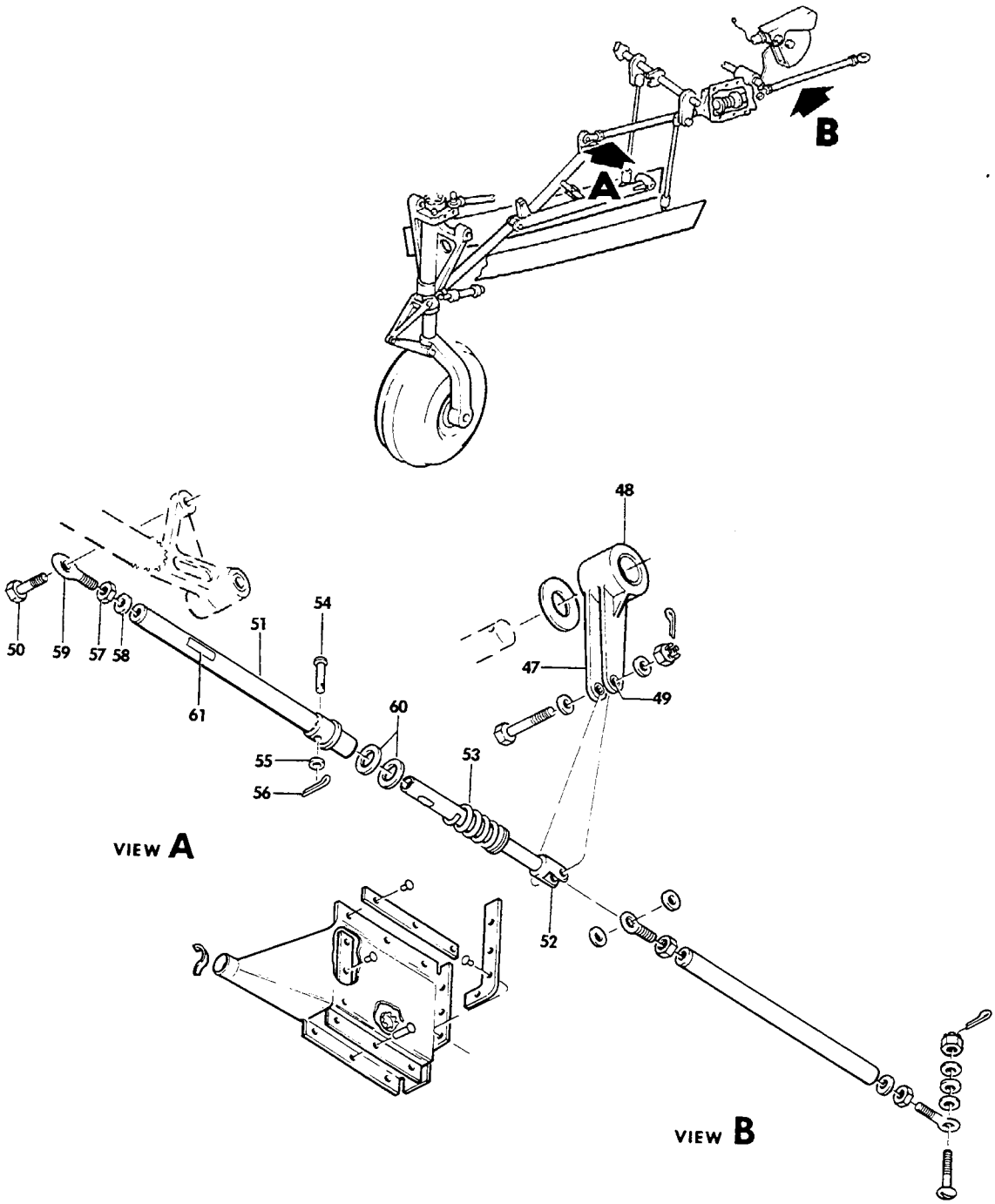

FIGURE 30-10.NOSE LANDING GEAR RETRACT MECHANISM/SHEET 3 OF 3 SHEETS/

ATA CODE & INDEX NO.	PART NO.	DESCRIPTION 1 2 3 4 5 6 7	UNITS PER ASSY	USABLE ON CODE
30-10 - 47	35-820094-2	. . ARM	1	
- 48	35-820094-4	. . BUSHING	1	
- 49	105740X-ZU0164	. . BUSHING	2	
	95-824020	. ROD ASSY,RETRACT FWD LINK	1	9
	35-825087-16	. ROD ASSY,RETRACT FWD LINK	1	10
	96-820025	. ROD ASSY,RETRACT FWD LINK	1	3
		/ATTACHING PARTS/		
- 50	35-825108	. BOLT.	1	
	AN320-5/M/	. NUT	1	
	MS24665-132	. PIN,COTTER.	1	
		——*——		
- 51	95-824020-3	. . ROD ASSY.	1	9
	35-825087-14	. . ROD ASSY.	1	10
	96-820025-3	. . ROD ASSY.	1	3
- 52	35-825094-4	. . PLUNGER ASSY.	1	
- 53	35-825188	. . SPRING.	1	
- 54	45-824014	. . PIN,SHEAR	1	11
	96-820025-11	. . PIN,SHEAR	1	12
	MS20392-2C29	. . PIN,SHEAR	1	13
- 55	AN960D10L	. . WASHER.	1	11
	AN960-10L	. . WASHER.	1	3
- 56	MS24665-132	. . PIN,COTTER.	1	
- 57	AN316-6R	. . NUT	1	
- 58	AN960-616L	. . WASHER.	1	
- 59	HMX5FG	. . END,ROD	1	
- 60	100951DD064XM	. WASHER.	AR	
	100951DD032XM	. WASHER.	AR	
- 61	35-825192	PLACARD,RETRACT ROD LINK.	1	11
	96-820015	DECAL,RETRACT ROD LINK.	1	12
	96-820036	DECAL,RETRACT ROD LINK.	1	13

CODES OF EFFECTIVITY

1	TC-1 THRU TC-1360	2	TC-1361 THRU TC-1607
3	TE-1 THRU TE-942 EXCEPT TE-938	4	TC-1361 THRU TC-1607 TE-1 THRU TE-942 EXCEPT TE-938
5	TC-1 THRU TC-1607 TE-1 THRU TE-300	6	TE-301 THRU TE-942 EXCEPT TE-938
7	TC-1 THRU TC-1569	8	TC-1570 THRU TC-1607
9	TC-1 THRU TC-499	10	TC-500 THRU TC-1607
11	TC-1 THRU TC-1607	12	TE-1 THRU TE-767
13	TE-768 THRU TE-942 EXCEPT TE-938		

"END"

32-30-20
LANDING GEAR RETRACT MOTOR AND GEARBOX

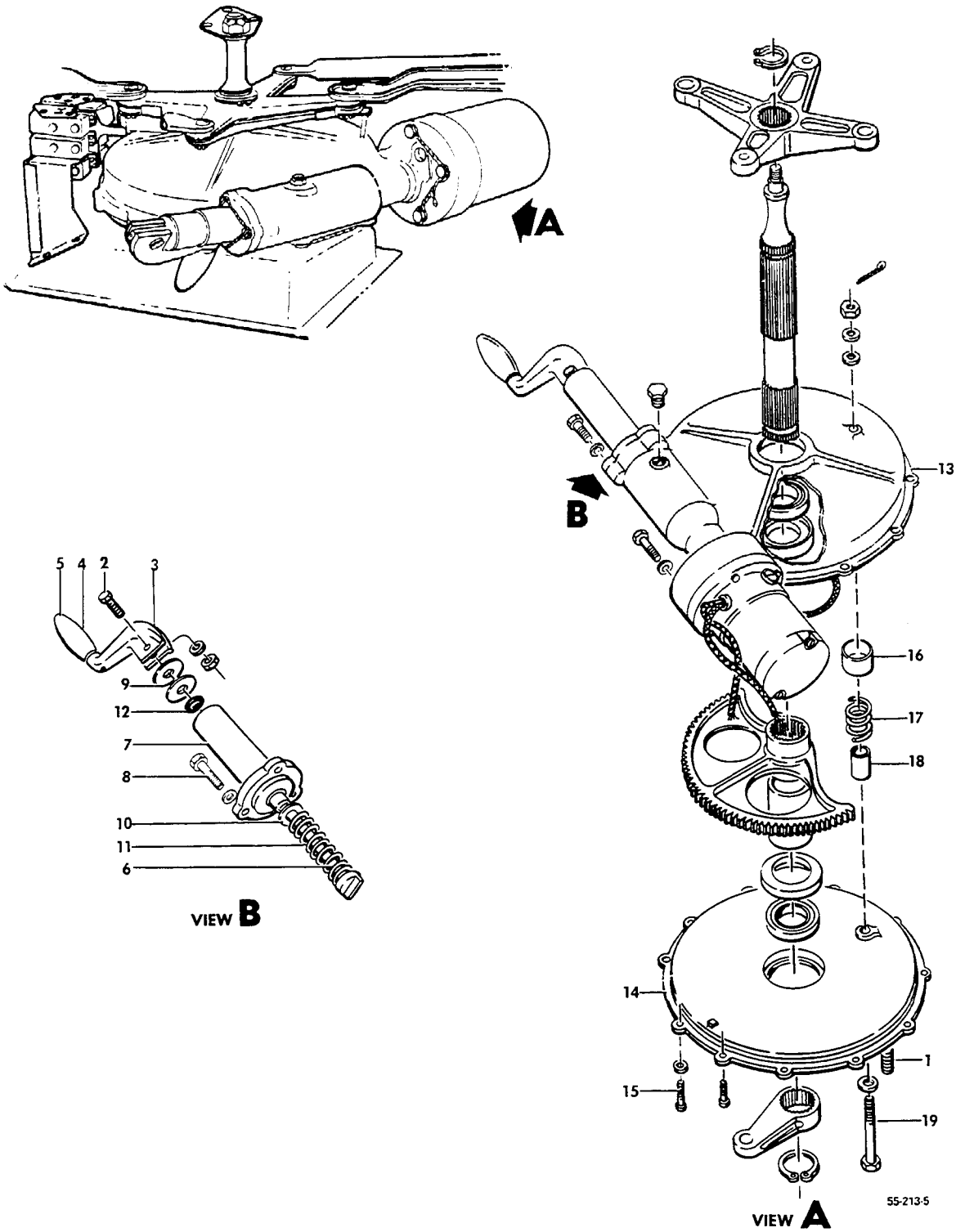

FIGURE 30-20.LANDING GEAR RETRACT MOTOR AND GEARBOX/SHEET 1 OF 2 SHEETS/

ATA CODE & INDEX NO.	PART NO.	DESCRIPTION 1 2 3 4 5 6 7	UNITS PER ASSY	USABLE ON CODE
30-20	95-810017	ACTUATOR ASSY,LANDING GEAR.	1	1
	95-810017-5	ACTUATOR ASSY,LANDING GEAR/ORDER 95-810017-11/.	NP	2
		/ATTACHING PARTS/		
- 1	35-810097	STUD,LANDING GEAR RETRACT	4	
	AN960-416	WASHER.	4	
	MS20365-428	NUT	4	
		——+——		
	35-810094	. CRANK ASSY,LANDING GEAR EMERGENCY EXTENSION .	1	
		/ATTACHING PARTS/		
- 2	AN23-17A/M/	. BOLT.	1	
	AN960-10	. WASHER.	1	
	MS20365-1032	. NUT	1	
		——+——		
- 3	35-810094-2	. . CRANK,HAND.	1	
- 4	35-810094-6	. . HANDLE,HAND CRANK	1	
- 5	AN393-77	. . PIN	1	
	AN960-10L	. . WASHER.	1	
- 6	35-810095	. SHAFT,HAND CRANK ENGAGING	1	
- 7	35-810142	. HOUSING,HAND CRANK SHAFT.	1	
		/ATTACHING PARTS/		
- 8	AN500A10-10	. SCREW	3	
	AN960-10	. WASHER.	3	
		——+——		
- 9	35-810134	. WASHER/.035 THICK/.	AR	
	35-810134-1	. WASHER/.012 THICK/.	AR	
- 10	100951X063YW	. WASHER.	1	
- 11	35-810075-11	. SPRING.	1	
- 12	AN622789	. O RING.	1	
- 13	35-810141-5	. HOUSING,LANDING GEAR ACTUATOR UPPER	1	
- 14	35-815020	. HOUSING,LANDING GEAR ACTUATOR LOWER	1	
		/ATTACHING PARTS/		
- 15	AN500A10-10	. SCREW	10	
	AN500A10-8	. SCREW	1	
	AN960-10	. WASHER.	11	
		——+——		
- 16	100696X-YD024	. SPACER,GEAR STOP.	1	
- 17	35-810119	. SPRING,GEAR STOP.	1	
- 18	35-810087	. STOP,WORM SECTOR GEAR	1	
		/ATTACHING PARTS/		
- 19	AN5-17/M/	. BOLT.	1	
	AN960-516	. WASHER.	1	
	AN960D516	. WASHER.	2	
	AN310-5	. NUT	1	
	MS24665-132	. PIN,COTTER.	1	
		——+——		

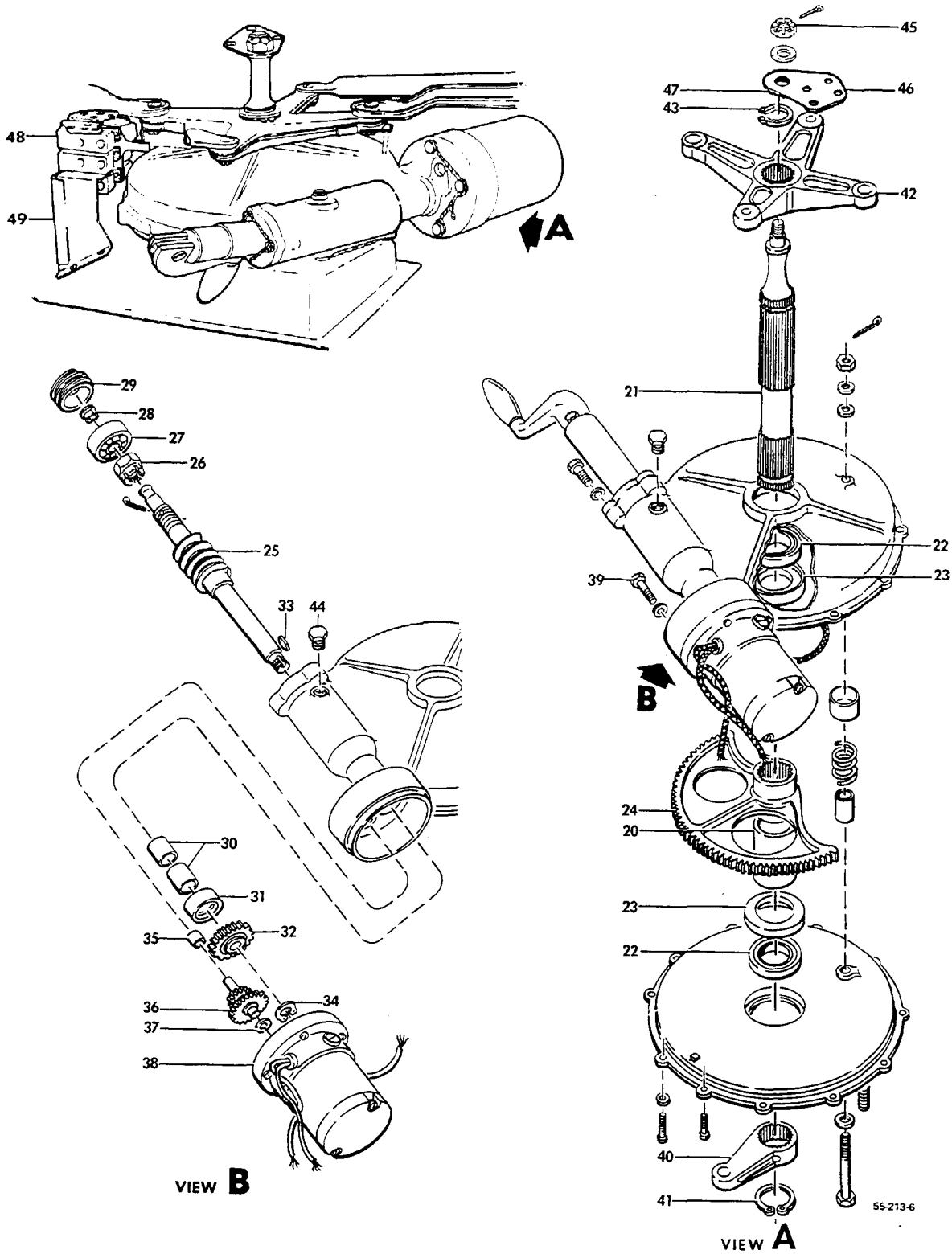

FIGURE 30-20. LANDING GEAR RETRACT MOTOR AND GEARBOX/SHEET 2 OF 2 SHEETS/

SUB-SECT UNIT & ITEM NO.	PART NO.	DESCRIPTION 1 2 3 4 5 6 7	UNITS PER ASSY	USABLE ON CODE
30-20 - 20	35-810088	. SPACER,LANDING GEAR ACTUATOR.	1	
- 21	35-810083	. SHAFT,ACTUATOR DRIVE.	1	
- 22	K21B	. BEARING,DRIVE SHAFT	2	
- 23	450273	. SEAL/ALTERNATE FOR 15766/	2	
	15766	. SEAL/ALTERNATE FOR 450273/.	2	
- 24	35-810117	. SECTOR,ACTUATOR WORM.	1	
- 25	35-810076-3	. GEAR,ACTUATOR WORM.	1	
	AN380-3-4	. PIN,COTTER.	1	
- 26	35-810147	. NUT,ACTUATOR WORM GEAR.	1	
- 27	5201KD	. BEARING/ALTERNATE FOR 5201SBKF/	1	
	5201SBKF	. BEARING/ALTERNATE FOR 5201KD/	1	
- 28	35-810077-3	. BUSHING,ACTUATOR WORM GEAR.	2	
- 29	45-810144	. NUT	1	
- 30	B88X	. BEARING	2	
- 31	09916M1	. SEAL.	1	
- 32	35-810136	. GEAR,REDUCTION.	1	
- 33	35-810091	. KEY,WORM DRIVE GEAR	1	
- 34	MS16624-1043	. RING,SNAP	1	
- 35	M471X	. BEARING	1	
- 36	35-810135	. GEAR,SPUR & PINION.	1	
- 37	105090CR032-4E	. WASHER.	1	
- 38	96-380022	. MOTOR ASSY,LANDING GEAR ACTUATOR.	1	
		/SEE CHAPTER 32-30-30/		
		/ATTACHING PARTS/		
- 39	AN73-15/M/	. BOLT.	3	
	AN960-10L	. WASHER.	3	
		----*----		
- 40	35-825172-2	. ARM,NOSE GEAR ACTUATOR RETRACT.	1	
- 41	NAS51-131	. RING.	1	
- 42	45-810090	. ARM,ACTUATOR RETRACT.	1	
- 43	NAS51-131	. RING.	1	
- 44	45-810071	. PLUG ASSY,WORM GEAR GREASE.	1	1
	5677	. PLUG.	1	2
	AN900-9	. GASKET.	1	
	35-810132	SUPPORT ASSY,LANDING GEAR ACTUATOR UPPER. . . .	1	
		/ATTACHING PARTS/		
	AN960-716	WASHER.	1	
	AN960-516	WASHER.	1	
- 45	AN310-5	NUT	1	
	MS24665-132	PIN,COTTER.	1	
		----*----		
- 46	35-810132-2	. SUPPORT,GEAR ACTUATOR UPPER	1	
- 47	35-810133	. BUSHING,ACTUATOR GEAR SUPPORT	1	
- 48	R 95-364011	SWITCH ASSY,LANDING GEAR LIMIT.	1	
- 49	R 35-364126	BRACKET	1	

CODES OF EFFECTIVITY

1 TC-1 THRU TC-240

2 TC-241 THRU TC-1607
TE-1 THRU TE-942
EXCEPT TE-938

32-30-30
LANDING GEAR RETRACT MOTOR

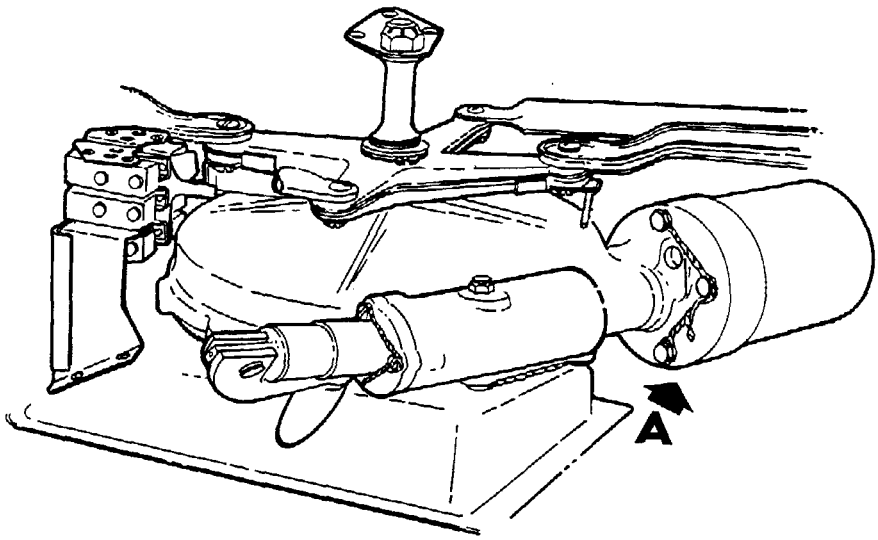

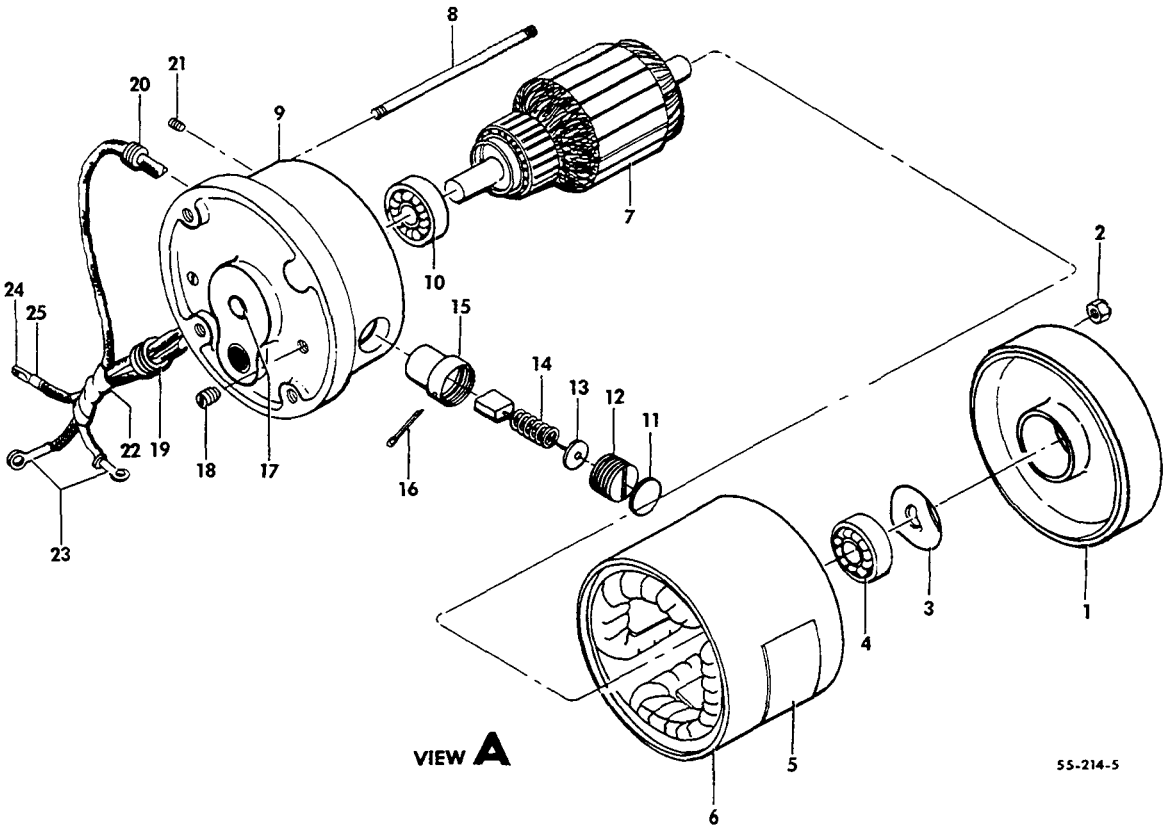

FIGURE 30-30. LANDING GEAR RETRACT MOTOR

ATA CODE & INDEX NO.	PART NO.	DESCRIPTION 1 2 3 4 5 6 7	UNITS PER ASSY	USABLE ON CODE
30-30	96-380022	MOTOR ASSY,LANDING GEAR RETRACT	1	
- 1	0-6864	. BRACKET,END	1	
- 2	7469	. NUT	2	
- 3	0-3518	. SPRING,LOAD	2	
	20-2279	. WASHER,SHIM	AR	
- 4	20-7609	. BEARING,BALL	1	
- 5	8047	. NAME PLATE	1	
- 6	27395A	. COIL ASSY,FIELD	1	
- 7	32493A	. ARMATURE ASSY	1	
- 8	10-7888	. STUD	2	
- 9	0-6865	. BRACKET,COMMUTATOR END	1	
- 10	30-7623	. BEARING,BALL	1	
- 11	10-4431	. DISC,FIBER	2	
- 12	5705	. SCREW,BRUSH HOLDER	2	
- 13	0-2497	. WASHER,FIBER	2	
- 14	35175A	. BRUSH & SPRING ASSY	2	
- 15	33107A	. BRUSH HOLDER ASSY	2	
- 16	MS24665-138	. PIN,COTTER	2	
- 17	20-7642	. BEARING,NEEDLE	1	
- 18	7978	. SCREW,SET	2	
- 19	0-3896	. BUSHING,CORD	1	
- 20	0-3883	. BUSHING,CORD	1	
- 21	10-7822	. SCREW,SET	2	
	8058	. PIN,DRIVE	2	
- 22	39109A	. HARNESS ASSY	1	
- 23	0-5114	. . LUG,TERMINAL	2	
- 24	0-5113	. . LUG,TERMINAL	1	
- 25	20-3841	. . SLEEVE	3	

"END"

32-40-01
MAIN GEAR WHEEL
TC-1 THRU TC-1288

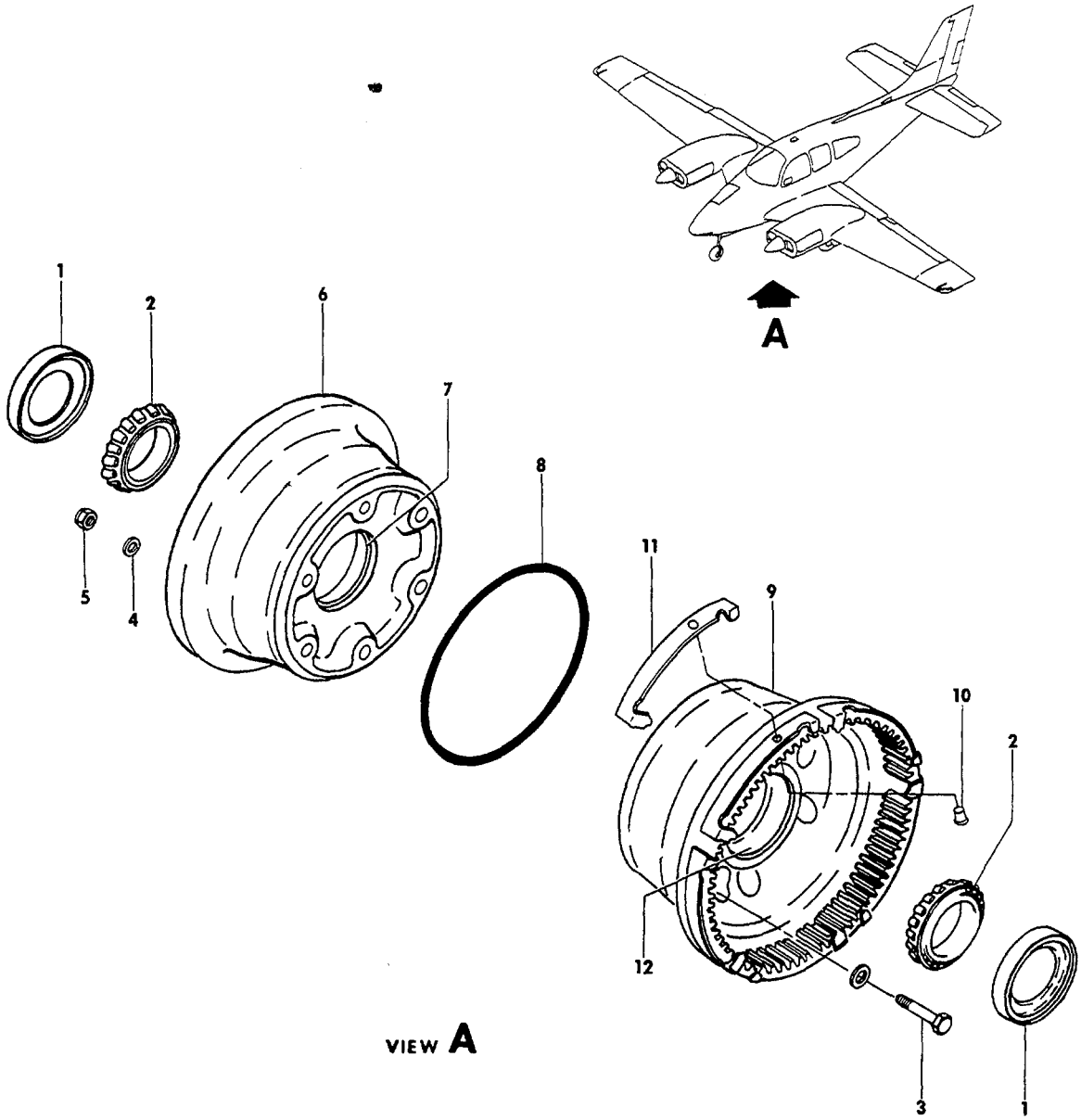

55-203-5

FIGURE 40-01.MAIN GEAR WHEEL

ATA CODE & INDEX NO.	PART NO.	DESCRIPTION 1 2 3 4 5 6 7	UNITS PER ASSY	USABLE ON CODE
40-01	96-300001-3	WHEEL ASSY,MAIN/SIDEWALL INFLATED TUBELESS TIRE	1	1
	96-300001-51	WHEEL ASSY,MAIN/TUBE TYPE TIRE/	1	1
- 1	169-300001-23	. SEAL,BEARING/SUPERSEDES 96-300001-25. . . . . AND 95-24218/	2	1
- 2	13889	. CONE,BEARING.	2	1
- 3	AN5-13A	. BOLT.	6	1
- 4	AN960-516	. WASHER.	12	1
- 5	32FE-524	. NUT,SELF LOCKING.	6	1
- 6	96-300001-13	. WHEEL ASSY,NO BRAKE HALF/TUBELESS TIRE/ . . .	1	1
	96-300001-57	. WHEEL ASSY,NO BRAKE HALF/TUBE TYPE TIRE/. . .	1	1
- 7	13830	. . CUP,BEARING	1	1
- 8	96-300001-23	. SEAL,WHEEL O-RING/USE WITH TUBELESS TIRE ONLY	1	1
- 9	96-300001-11	. WHEEL ASSY,BRAKE HALF	1	1
- 10	MS20426DD6-6	. . RIVET	5	1
- 11	96-300001-19	. . CLIP,DISC	5	1
- 12	13830	. . CUP,BEARING	1	1

CODES OF EFFECTIVITY

1 TC-1 THRU TC-1288

"END"

32-40-02
MAIN WHEEL ASSY
TC-1289 THRU TC-1607
TE-1 THRU TE-942 EXCEPT TE-938

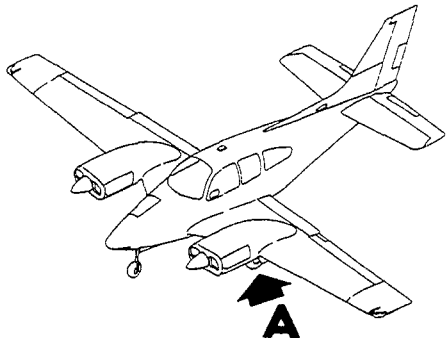

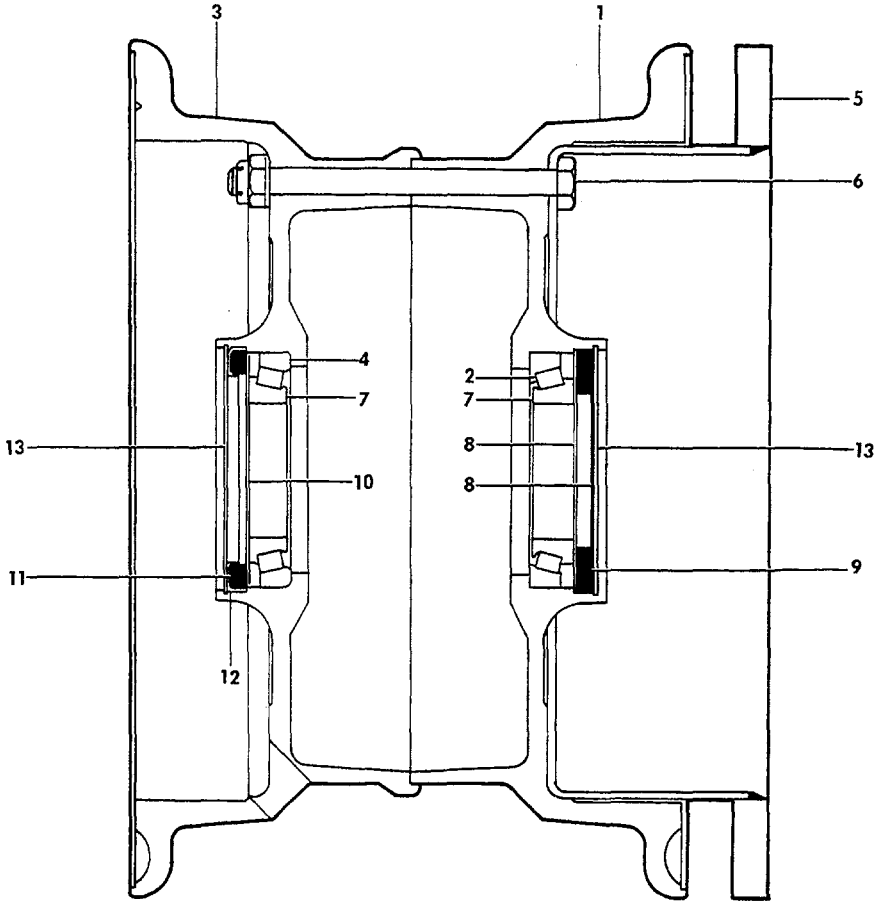

VIEW A

55-203-3

FIGURE 40-02.MAIN GEAR WHEEL

ATA CODE & INDEX NO.	PART NO.	DESCRIPTION 1 2 3 4 5 6 7	UNITS PER ASSY	USABLE ON CODE
40-02	40-98	WHEEL ASSY.	1	1
	161-23	. WHEEL HALF ASSY,INNER	1	1
- 1	151-19	. . WHEEL HALF,INNER.	1	1
- 2	13836	. . CUP,BEARING	1	1
	162-21	. WHEEL HALF ASSY,OUTER	1	1
- 3	152-17	. . WHEEL HALF,OUTER.	1	1
- 4	13836	. . CUP,BEARING	1	1
- 5	164-27	. DISC ASSY,BRAKE	1	1
- 6	AN5-35A/M/	. BOLT.	6	1
	AN960-516	. WASHER.	6	1
	MS20365-524	. NUT	6	1
- 7	13889	. CONE,BEARING.	2	1
- 8	153-9	. RING,GREASE SEAL.	2	1
- 9	154-14	. FELT,GREASE SEAL.	1	1
- 10	A39070	. RING,GREASE SEAL.	1	1
- 11	154-13	. FELT,GREASE SEAL.	1	1
- 12	153-15	. RING,GREASE SEAL.	1	1
- 13	3023	. RING,SNAP	2	1

CODES OF EFFECTIVITY

1 TC-1289 THRU TC-1607
TE-1 THRU TE-942
EXCEPT TE-938

"END"

32-40-10
NOSE GEAR WHEEL

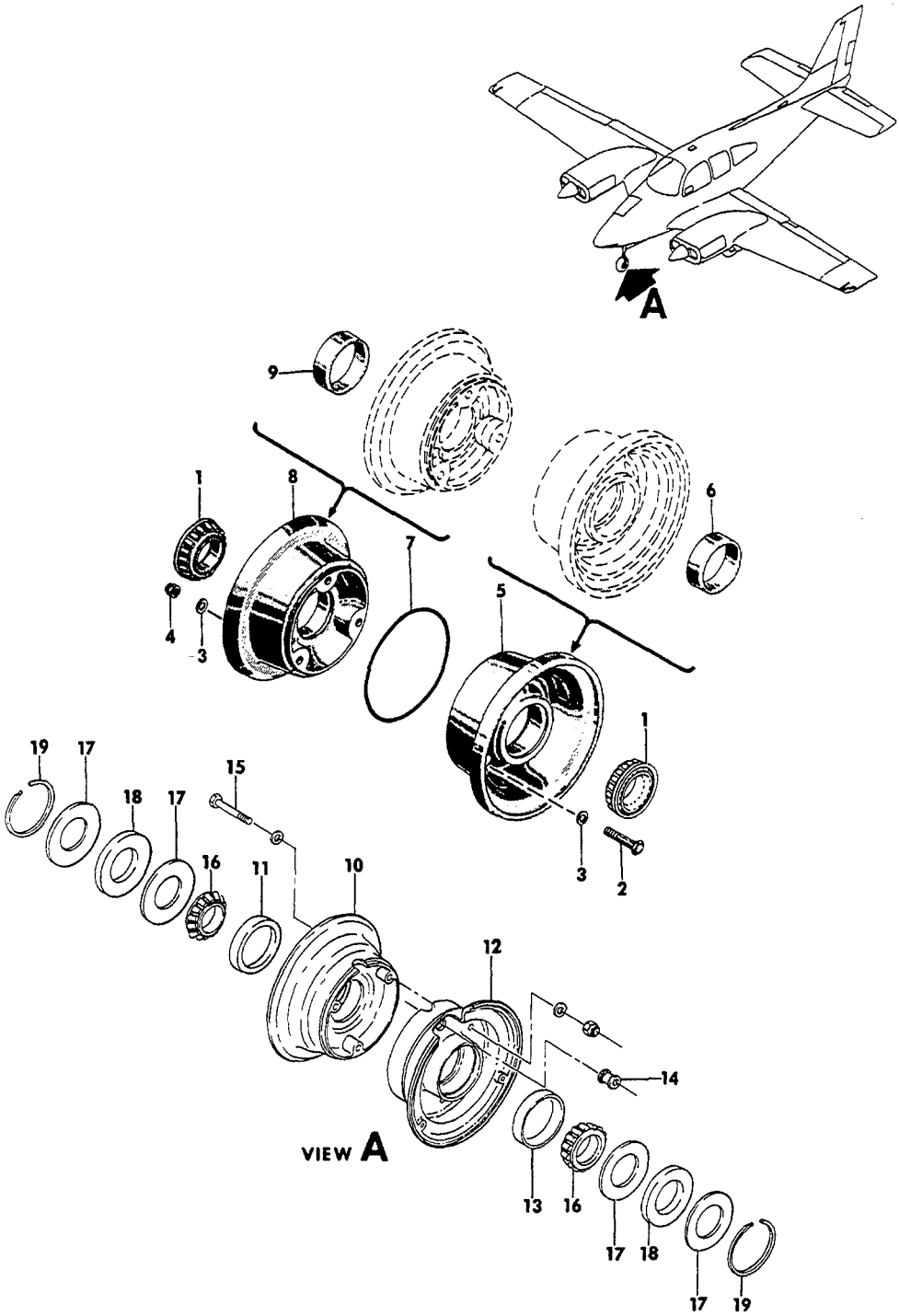

55-207-4

FIGURE 40-10.NOSE GEAR WHEEL

SUB-SECT UNIT & ITEM NO.	PART NO.	DESCRIPTION 1 2 3 4 5 6 7	UNITS PER ASSY	USABLE ON CODE
40-10	95-32669	WHEEL ASSY/TUBELESS TIRE.	1	1
		SUPERSEDES 95-32102/		
	95-32926	WHEEL ASSY/TUBE TYPE TIRE/.	1	2
- 1	LM67048XL	. CONE,BEARING.	2	2
- 2	AN4-14A/M/	. BOLT.	3	2
- 3	AN960-416	. WASHER.	6	2
- 4	95-6867	. NUT	3	2
- 5	95-24192	. WHEEL HALF ASSY,OUTER/USE ON 95-32102	1	2
		WHEEL ASSY,TUBELESS TIRE/		
	95-32671	. WHEEL HALF ASSY,OUTER/USE ON 95-32669	1	2
		WHEEL ASSY,TUBELESS TIRE/		
	95-41899	. WHEEL HALF ASSY,OUTER/TUBE TYPE TIRE/	1	2
		HAS PROVISION FOR VALVE STEM		
- 6	LM67010XL	. . CUP,BEARING	1	2
- 7	95-25419	. SEAL,O RING WHEEL/SUPERSEDES AN6230820. . . .	1	2
		TUBELESS TIRE/		
- 8	95-32671	. WHEEL HALF ASSY,INNER/USE ON 95-32102	1	2
		WHEEL ASSY,TUBELESS TIRE		
		SUPERSEDES 95-24193/		
	95-32672	. WHEEL HALF ASSY,INNER/USE ON 95-32669	1	2
		WHEEL ASSY,TUBELESS TIRE/		
	95-41898	. WHEEL HALF ASSY,INNER/USE ON 95-32926	1	2
		WHEEL ASSY,TUBE TYPE TIRE/		
- 9	LM67010XL	. . CUP,BEARING	1	2
	36-8002-1	WHEEL ASSY,NOSE/TUBE TYPE TIRE/	1	3
- 10	36-8002-3	. WHEEL HALF ASSY,INNER	1	3
- 11	08231	. . CUP,BEARING	1	3
- 12	36-8002-5	. WHEEL HALF ASSY,OUTER	1	3
- 13	08231	. . CUP,BEARING	1	3
- 14	217-1	. . GROMMET	1	3
- 15	AN4-22A/M/	. BOLT.	3	3
	AN960-416	. WASHER.	6	3
	MS20365-428	. NUT	3	3
- 16	08125	. CONE,BEARING.	2	3
- 17	153-1	. RING,GREASE SEAL.	4	3
- 18	154-1	. FELT,GREASE SEAL.	2	3
- 19	155-2	. RING,SNAP	2	3

CODES OF EFFECTIVITY

1 TC-1 THRU TC-809 2 TC-1 THRU TC-1077
3 TC-1078 THRU TC-1607
TE-1 THRU TE-942
EXCEPT TE-938

32-40-20
BRAKE ASSY
TC-1 THRU TC-422

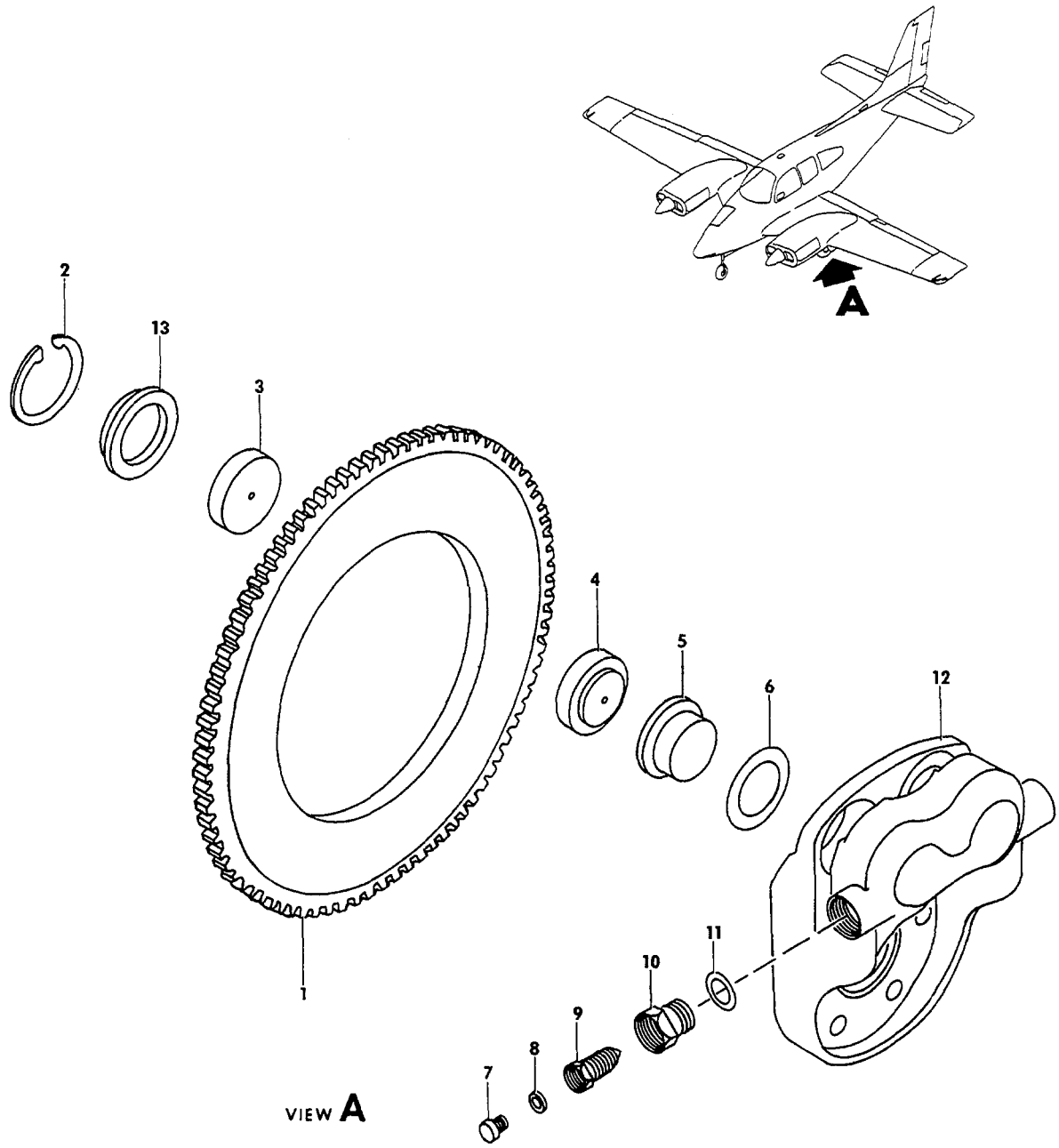

55-218-9

FIGURE 40-20.BRAKES

SUB-SECT UNIT & ITEM NO.	PART NO.	DESCRIPTION 1 2 3 4 5 6 7	UNITS PER ASSY	USABLE ON CODE
40-20	95-32412	BRAKE ASSY.	2	1
	95-32679	BRAKE ASSY.	2	2
- 1	95-32166	. DISC,BRAKE.	1	1
	95-32684	. DISC,BRAKE.	1	2
- 2	95-8072	. RING,RETAINING.	2	3
- 3	95-24805	. LINING,ANVIL.	2	1
	95-26275	. LINING,ANVIL/SUPERSEDES 95-25132/	2	2
- 4	95-24804	. LINING,PISTON	2	1
	95-26274	. LINING,PISTON/SUPERSEDES 95-25133/.	2	2
- 5	95-24834	. PISTON.	2	3
- 6	AN6227B23	. O RING.	2	3
- 7	AN501A10-4	. SCREW,BLEEDER	1	3
- 8	96-300001-41	. WASHER.	1	3
- 9	95-5204	. VALVE,BLEEDER/SUPERSEDES AN6204-1/.	1	3
- 10	50-300013-37	. ADAPTER,BLEEDER/SUPERSEDES 95-22134/.	1	3
- 11	AN6290-6	. GASKET,INLET AND BLEEDER.	2	1
	MS28778-6	. GASKET,INLET AND BLEEDER.	2	2
- 12	95-41589	. HOUSING,BRAKE	1	3
- 13	95-26146	. CARRIER,LINING/USE WITH 95-26275 LINING/.	2	2

CODES OF EFFECTIVITY

1 TC-1 THRU TC-199 2 TC-200 THRU TC-422
3 TC-1 THRU TC-422

32-40-21
BRAKE ASSY
TC-423 THRU TC-1288

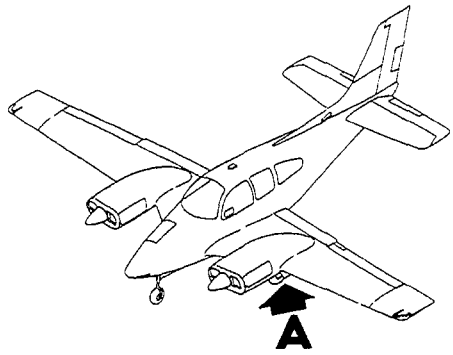

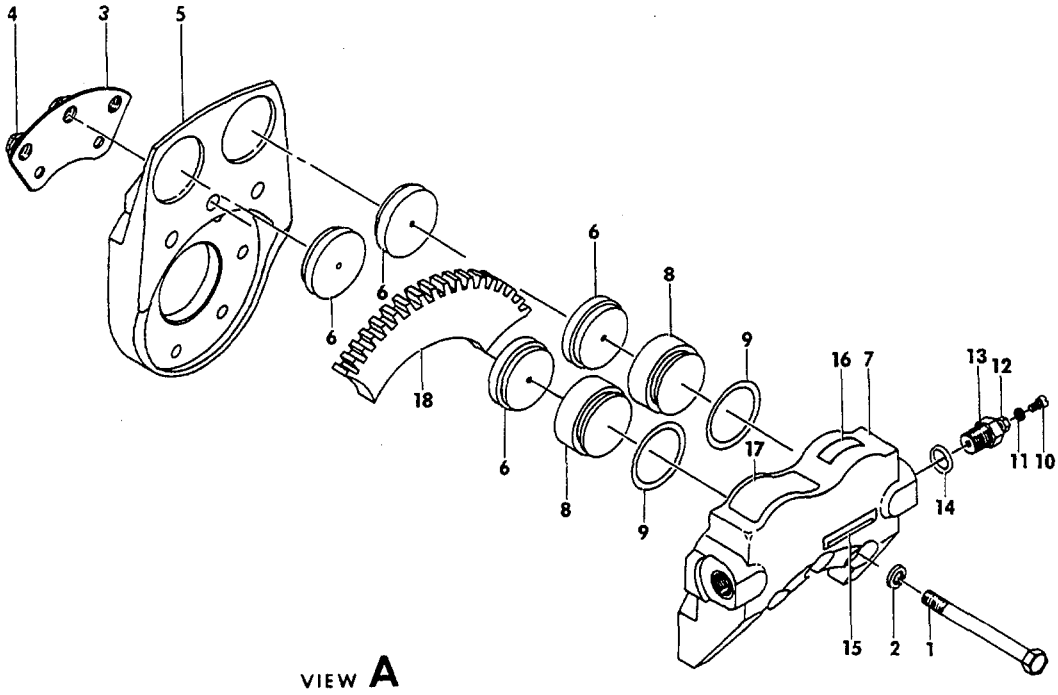

55-218-8

FIGURE 40-21.BRAKES

ATA CODE & INDEX NO.	PART NO.	DESCRIPTION 1 2 3 4 5 6 7	UNITS PER ASSY	USABLE ON CODE
40-21	96-300001-5	BRAKE ASSY.	2	1
- 1	AN6-27A	. BOLT.	3	1
- 2	AN960-616	. WASHER.	3	1
	96-300001-15	. NUTPLATE ASSY	1	1
- 3	96-300001-37	. . PLATE	1	1
- 4	2610-064	. . NUT-SHEL.	3	1
	MS20427F4-5	. . RIVET	6	1
- 5	96-300001-35	. HOUSING,BACK PLATE.	1	1
- 6	96-300001-49	. LINING,BRAKE.	4	1
- 7	96-300001-29	. HOUSING	1	1
- 8	96-300001-31	. PISTON.	2	1
- 9	AN6227B25	. O-RING,PISTON	2	1
- 10	AN501A10-4	. SCREW,BLEEDER	1	1
- 11	96-300001-41	. WASHER.	1	1
- 12	95-5204	. VALVE,BLEEDER/SUPERSEDES AN6204-1/.	1	1
- 13	50-300013-37	. ADAPTER,BLEEDER	1	1
- 14	MS28778-6	. GASKET,BLEEDER.	1	1
- 15	96-300001-43	. PLATE,SERIAL DATA	1	1
- 16	96-300001-45	. PLATE,TORQUE DATA	1	1
- 17	96-300001-47	. PLATE,BEECHCRAFT.	1	1
- 18	96-300001-9	. DISC,BRAKE.	1	1

CODES OF EFFECTIVITY

1 TC-423 THRU TC-1288

"END"

32-40-22
BRAKE ASSY
TC-1289 THRU TC-1607
TE-1 THRU TE-942 EXCEPT TE-938

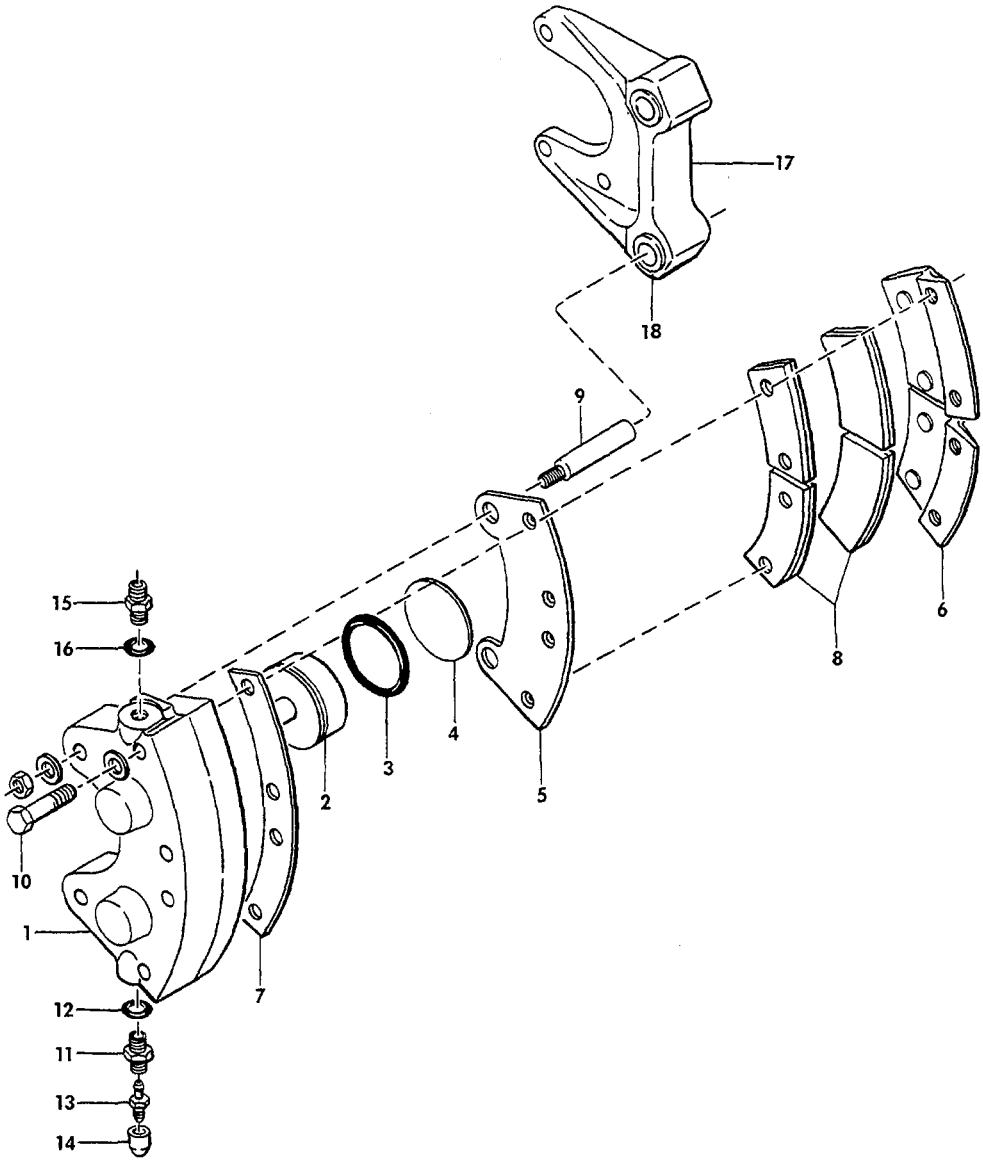

E55-218-1

FIGURE 40-22.BRAKES

ATA CODE & INDEX NO.	PART NO.	DESCRIPTION 1 2 3 4 5 6 7	UNITS PER ASSY	USABLE ON CODE
40-22	30-66	BRAKE ASSY.	2	1
	91-27	. CYLINDER ASSY	1	1
- 1	61-22	. . CYLINDER.	1	1
	92-18	. . PISTON ASSY	2	1
- 2	62-17	. . . PISTON.	NP	1
- 3	AN6227B27	. . . O RING.	1	1
- 4	88-1	. . . INSULATOR	1	1
- 5	73-13	. . PLATE ASSY,PRESSURE	1	1
- 6	74-12	. . PLATE ASSY,BACK	2	1
- 7	66-17	. . SHIM,BACK PLATE	1	1
- 8	66-22	. . LINING.	4	1
- 9	69-4	. . BOLT.	2	1
	AN960-416L	. . WASHER.	2	1
	MS20365-428	. . NUT	2	1
- 10	LP4-20AM	. . BOLT.	4	1
	AN960-416L	. . WASHER.	4	1
- 11	81-2	. . SEAT,BLEEDER.	1	1
- 12	AN6227B7	. . O RING.	1	1
- 13	95-9279	. . SCREW,BLEEDER	1	1
- 14	183-1	. . CAP,BLEEDER	1	1
- 15	AN815-4D	. . FITTING,TUBE.	1	1
- 16	AN6227B7	. . O RING.	1	1
	75-40	. PLATE ASSY,TORQUE	1	1
- 17	65-30	. . PLATE,TORQUE.	NP	1
- 18	145-20	. . BUSHING	NP	1

CODES OF EFFECTIVITY

1 TC-1289 THRU TC-1607
TE-1 THRU TE-942
EXCEPT TE-938

"END"

32-40-30
BRAKE PLUMBING
TC-1 THRU TC-1221
TE-1 THRU TE-694

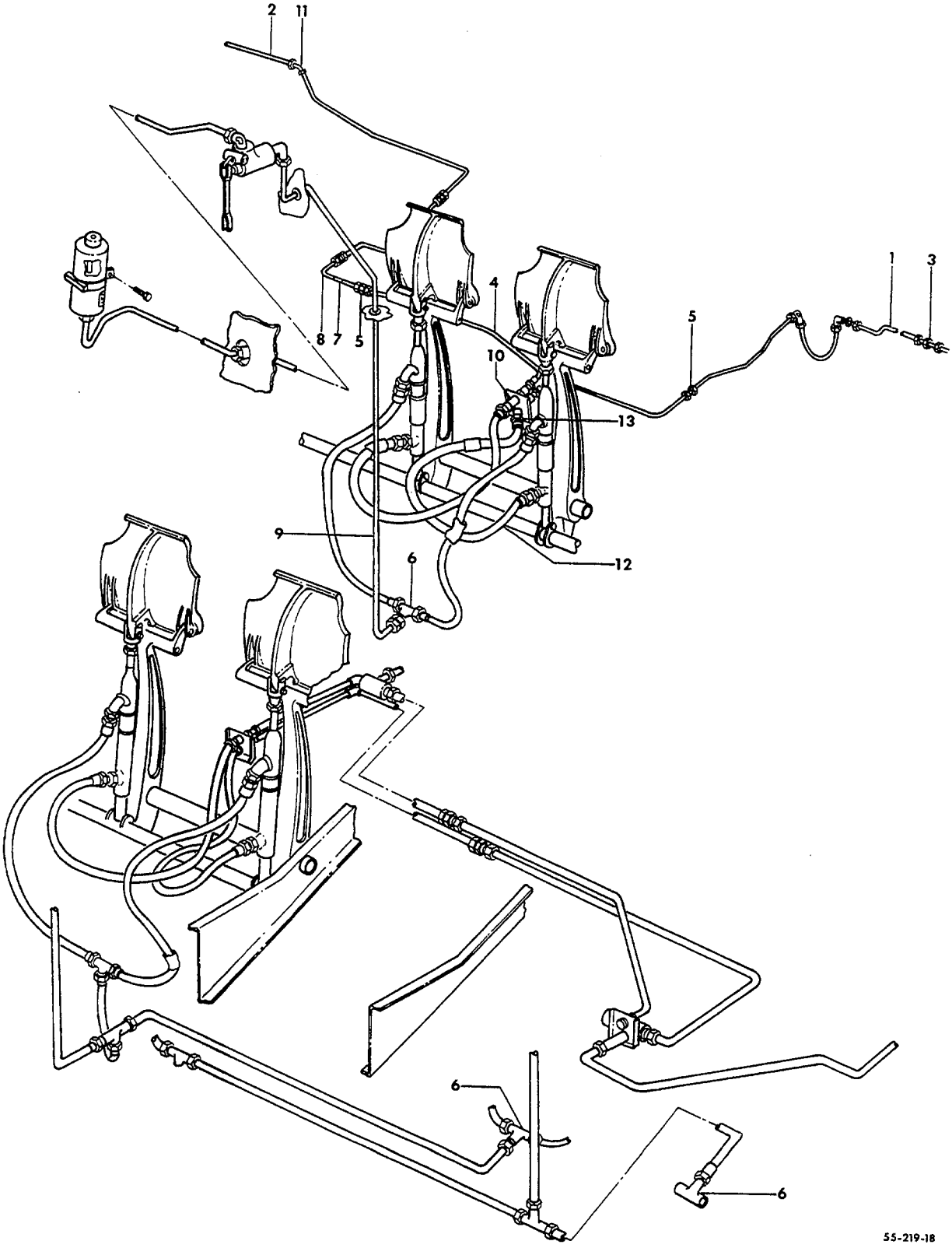

FIGURE 40-30.BRAKE PLUMBING
/SHEET 1 OF 4 SHEETS/

ATA CODE & INDEX NO.	PART NO.	DESCRIPTION 1 2 3 4 5 6 7	UNITS PER ASSY	USABLE ON CODE
40-30	95-814005-41	BRAKE PLUMBING INSTL/SINGLE BRAKES/	NP	1
	95-814005-43	BRAKE PLUMBING INSTAL/SINGLE BRAKES/	NP	2
	95-810019-45	BRAKE PLUMBING INSTL/DUAL BRAKES/	NP	3
- 1	35-815006-12	. TUBE ASSY,LH.	1	4
	95-814005-37	. TUBE ASSY,LH.	1	5
- 2	35-815006-13	. TUBE ASSY,RH.	1	4
	95-814005-38	. TUBE ASSY,RH.	1	5
- 3	AN837-4D	. ELBOW	2	4
	AN833-4D	. UNION	2	5
	AN960-716	. WASHER.	2	3
	AN924-4D	. NUT	2	3
	AN743-12	. BRACKET/SUPERSEDES AN743-6/ /ATTACHING PARTS/	2	3
	AN515-8-7	. SCREW	1	
	AN960-8	. WASHER.	1	
	MS20365-832	. NUT	1	
		——*——		
	MS21919-G4	. CLAMP/SUPERSEDES AN742-6C/ /ATTACHING PARTS/	2	3
	AN520-10-8	. SCREW	1	
	AN960-10	. WASHER.	1	
	MS20365-1032	. NUT	1	
		——*——		
	AN743-12	. BRACKET/SUPERSEDES AN743-6/ /ATTACHING PARTS/	1	3
	AN515-8-7	. SCREW	1	
	AN960-8	. WASHER.	1	
	MS20365-832	. NUT	1	
		——*——		
	MS21919-G4	. CLAMP/SUPERSEDES AN742-6C/ /ATTACHING PARTS/	1	3
	AN520-10-8	. SCREW	1	
	AN960-10	. WASHER.	1	
	MS20365-1032	. NUT	1	
		——*——		
- 4	35-815048	. TUBE ASSY/STANDARD/	1	3
- 5	AN815-4D	. UNION	2	3
- 6	AN834-4D	. TEE	1	3
- 7	AN789-4	. CLIP. /ATTACHING PARTS/	2	3
	AN515-8-7	. SCREW	2	
	AN960-8	. WASHER.	2	
	MS20365-832	. NUT	2	
		——*——		
- 8	95-814005-3	. TUBE ASSY/STANDARD/	1	3
- 9	95-814005-31	. TUBE ASSY/STANDARD/	1	3
- 10	AN832-4D	. UNION	1	3
	AN960-716	. WASHER.	1	3
	AN924-4D	. NUT	1	3
- 11	AN837-4D	. ELBOW	1	4
	AN833-4D	. ELBOW	1	5
	AN960-716	. WASHER.	1	3
	AN924-4D	. NUT	1	3
- 12	MS28741-4-0084	. HOSE ASSY	2	3
- 13	AN837-4D	. ELBOW/STANDARD/	1	3
	AN960-716	. WASHER.	2	3
	AN924-4D	. NUT	1	3

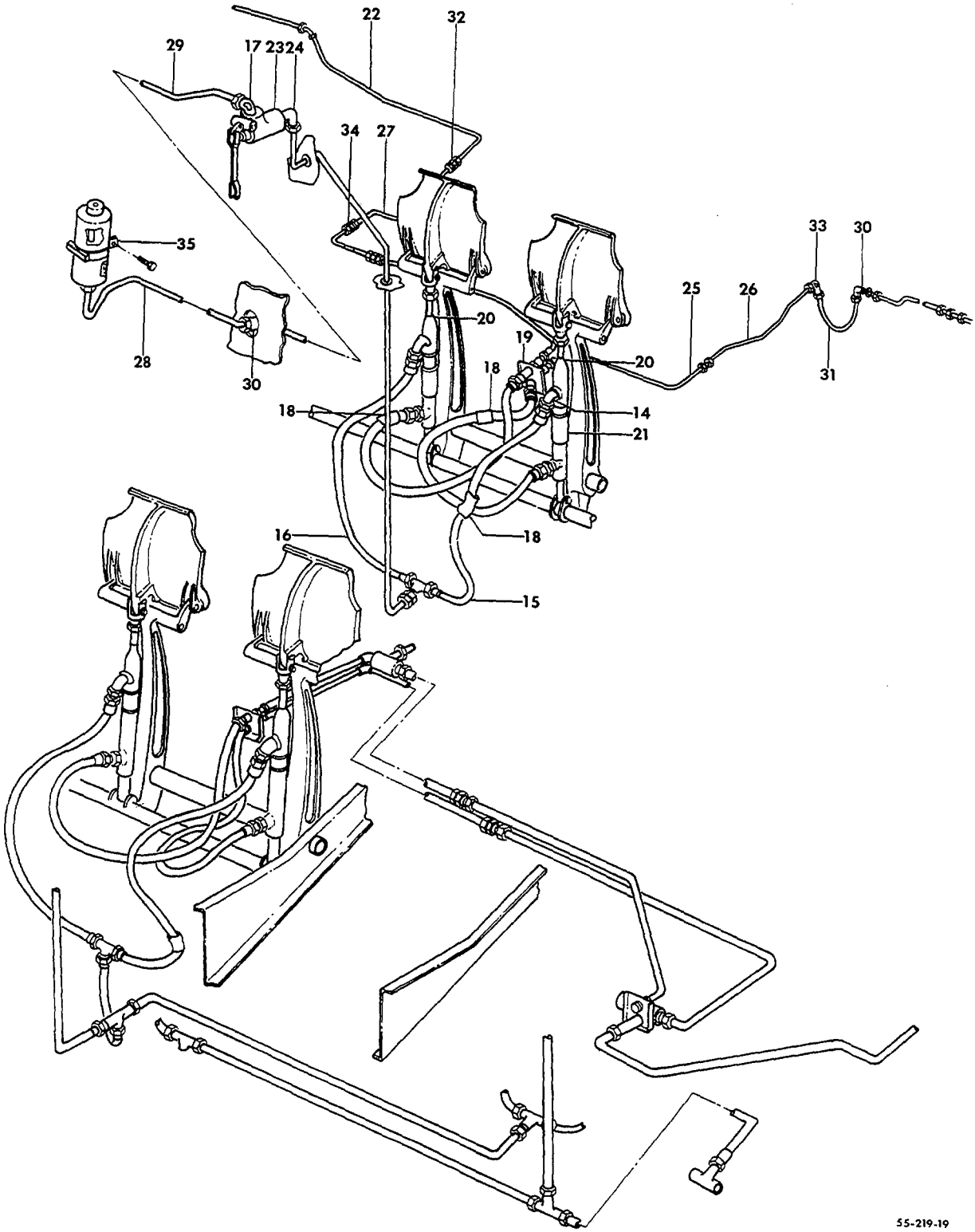

FIGURE 40-30. BRAKE PLUMBING
/SHEET 2 OF 4 SHEETS/

ATA CODE & INDEX NO.	PART NO.	DESCRIPTION 1 2 3 4 5 6 7	UNITS PER ASSY	USABLE ON CODE
40-30 - 14	MS20822-4	. ELBOW/90 DEGREE/.	4	3
- 15	MS28741-4-0152	. HOSE ASSY	1	3
- 16	MS28741-4-0156	. HOSE ASSY	1	3
- 17	AN823-4D	. ELBOW	1	3
- 18	106242-10-00800	. TUBING/USED ON MS28741-4-0084/.	2	3
	106242-10	. TUBING/USED WITH MS28741-4-0152 & -0156/. . .	2	3
- 19	35-815037	. BRACKET	1	3
		/ATTACHING PARTS/		
	AN3-4A	. BOLT.	2	
	AN960-10	. WASHER.	2	
		----*----		
- 20	35-815006-24	. COVER,MASTER CYLINDER	2	3
- 21	VV15-625-2	. CYLINDER ASSY,BRAKE MASTER/SUPERSEDES	2	6
		VV15-625-1,SEE CHAPTER 32-40-40/		
	96-380034-1	. CYLINDER ASSY,BRAKE MASTER/SEE.	2	7
		CHAPTER 32-40-41/		
		/ATTACHING PARTS/		
	AN3-10/M/	. BOLT.	2	
	AN960-10	. WASHER.	2	
	AN310-3	. NUT	2	
	MS24665-132	. PIN,COTTER.	2	
		----*----		
	AN911-1	. NIPPLE.	1	3
	AN822-4D	. ELBOW	1	3
	MS21919-G4	. CLAMP/SUPERSEDES AN742-6C/.	3	3
	AN520-10-8	. SCREW	3	3
	AN960-10	. WASHER.	3	3
	MS20365-1032	. NUT	3	3
- 22	95-814005-5	. TUBE ASSY	1	3
- 23	35-380065-5	. VALVE ASSY,PARKING BRAKE/SEE CHAPTER 32-40-60	1	3
		/ATTACHING PARTS/		
	AN520-10R	. SCREW	2	
	AN960-10L	. WASHER.	2	
		----*----		
- 24	AN822-4D	. ELBOW	1	3
- 25	35-815069	. TUBE ASSY,/STANDARD/.	1	3
- 26	35-815095	. TUBE ASSY	1	3
- 27	95-814005-9	. TUBE ASSY	1	3
- 28	95-814005-29	. TUBE ASSY	1	1
	95-814005-45	. TUBE ASSY	1	2
- 29	95-814005-33	. TUBE ASSY	1	3
- 30	AN833-4D	. ELBOW	1	3
	AN960-716	. WASHER.	1	3
	AN924-4D	. NUT	1	3
- 31	35-815006-8	. TUBE ASSY	1	3
- 32	AN815-4D	. UNION	1	3
- 33	AN821-4D	. ELBOW	1	3
	MS21919-G4	. CLAMP/SUPERSEDES AN742-6C/.	1	3
		/ATTACHING PARTS/		
	AN515-8-14	. SCREW	1	
	100696D-ZL016	. SPACER.	1	
	AN960-8	. WASHER.	1	
		----*----		
- 34	AN832-4D	. UNION	1	3
	AN960-716	. WASHER.	3	3
	AN924-4D	. NUT	1	3
- 35	766-4	. CLAMP	1	3

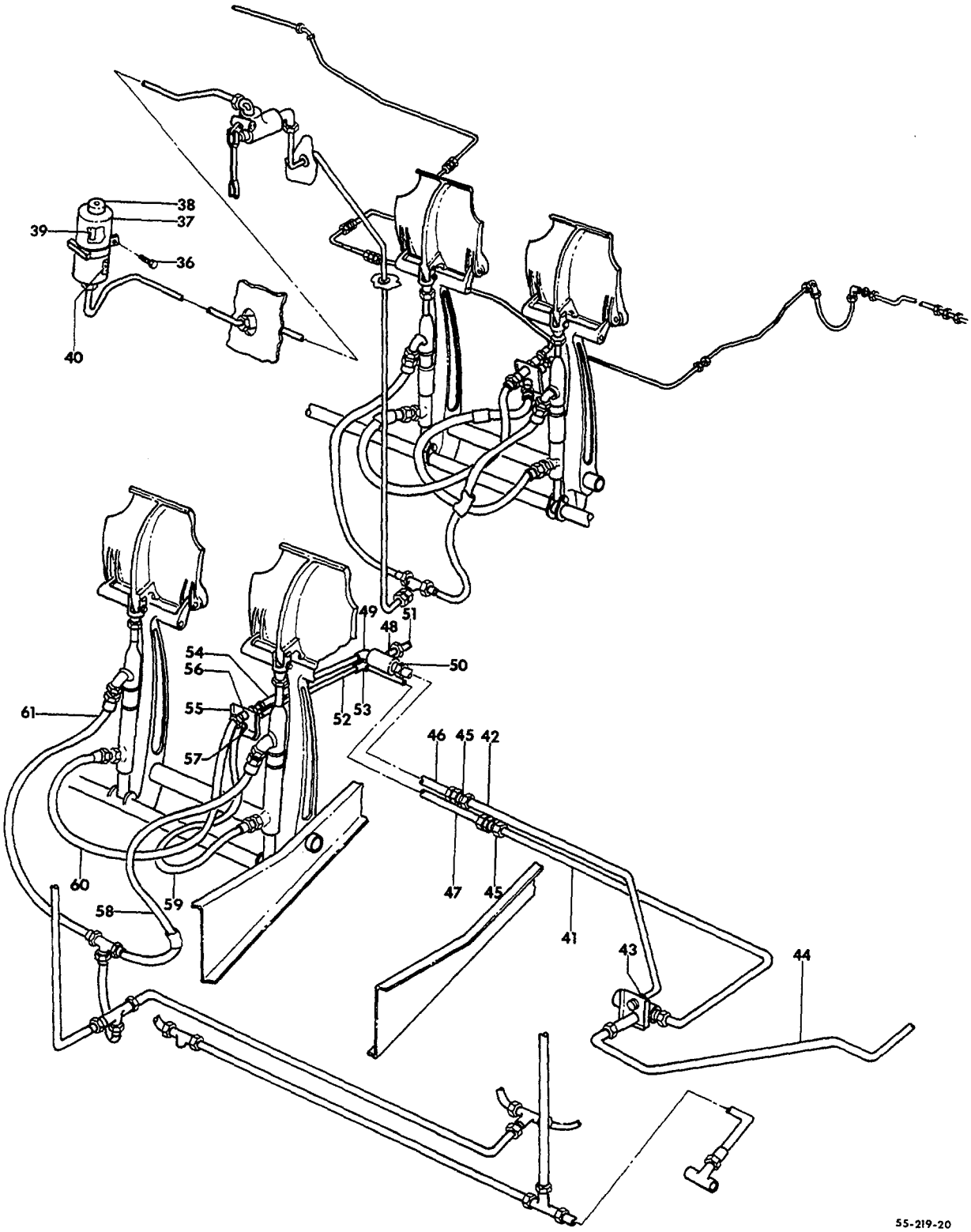

FIGURE 40-30. BRAKE PLUMBING
/SHEET 3 OF 4 SHEETS/

ATA CODE & INDEX NO.	PART NO.	DESCRIPTION 1 2 3 4 5 6 7	UNITS PER ASSY	USABLE ON CODE
40-30	35-815180	RESERVOIR ASSY,HYDRAULIC BRAKE FLUID	1	3
		/ATTACHING PARTS/		
- 36	AN520-10-10	SCREW	1	
	AN960-10	WASHER	1	
	MS20365-1032	NUT	1	
		*		
- 37	112136-4	CAN ASSY,BRAKE FLUID	1	3
- 38	35-815180-2	CAP	1	3
	AN515-6-40	SCREW	1	3
- 39	35-815180-6	SPACER	1	3
	100951DD032VA	WASHER	1	3
	AN960-6	WASHER	1	3
	MS20365-632	NUT	1	3
- 40	404-180074	PLACARD,HYDRAULIC BRAKE RESERVOIR	1	3
- 41	95-810019-11	TUBE ASSY/DUAL/	1	3
- 42	95-810019-9	TUBE ASSY/DUAL/	1	3
- 43	AN837-4D	ELBOW/DUAL/	1	3
	AN960-716	WASHER	2	3
	AN924-4D	NUT	1	3
- 44	95-810019-19	TUBE ASSY/DUAL/	1	3
	789-4	CLIP	2	3
		/ATTACHING PARTS/		
	AN515-8-7	SCREW	2	
	AN960-8	WASHER	2	
	MS20365-832	NUT	2	
		*		
- 45	AN815-4D	UNION	2	3
- 46	95-810019-7	TUBE ASSY/DUAL/	1	3
- 47	95-810019-37	TUBE ASSY/DUAL/	1	3
- 48	50-380079-1	VALVE,SHUTTLE	2	3
	50-380079-3	VALVE,SHUTTLE/ALTERNATE FOR 50-380079-1/	2	3
- 49	AN822-4D	ELBOW	3	3
- 50	AN816-4D	NIPPLE	1	3
- 51	95-810019-17	TUBE ASSY/DUAL/	1	3
- 52	95-810019-35	TUBE ASSY/DUAL/	1	3
- 53	AN833-4D	ELBOW	1	3
	AN924-4D	NUT	1	3
- 54	95-810019-41	TUBE ASSY/DUAL/	1	3
- 55	35-815037	BRACKET	1	3
		/ATTACHING PARTS/		
	AN520-10-8	SCREW	2	
	AN960-10	WASHER	2	
		*		
- 56	95-810019-39	ELBOW	1	3
- 57	AN832-4D	UNION	1	3
	AN960-716	WASHER	2	3
	AN924-4D	NUT	2	3
	AN821-4D	ELBOW	1	3
	MS21919DG4	CLAMP	1	3
	AN520-10-8	SCREW	1	3
	AN960-10	WASHER	1	3
	MS20365-1032	NUT	1	3
- 58	MS28741-4-0126	HOSE ASSY/DUAL/	1	3
- 59	MS28741-4-0107	HOSE ASSY/DUAL/	1	3
- 60	MS28741-4-0107	HOSE ASSY/DUAL/	1	3
- 61	MS28741-4-0120	HOSE ASSY/DUAL/	1	3

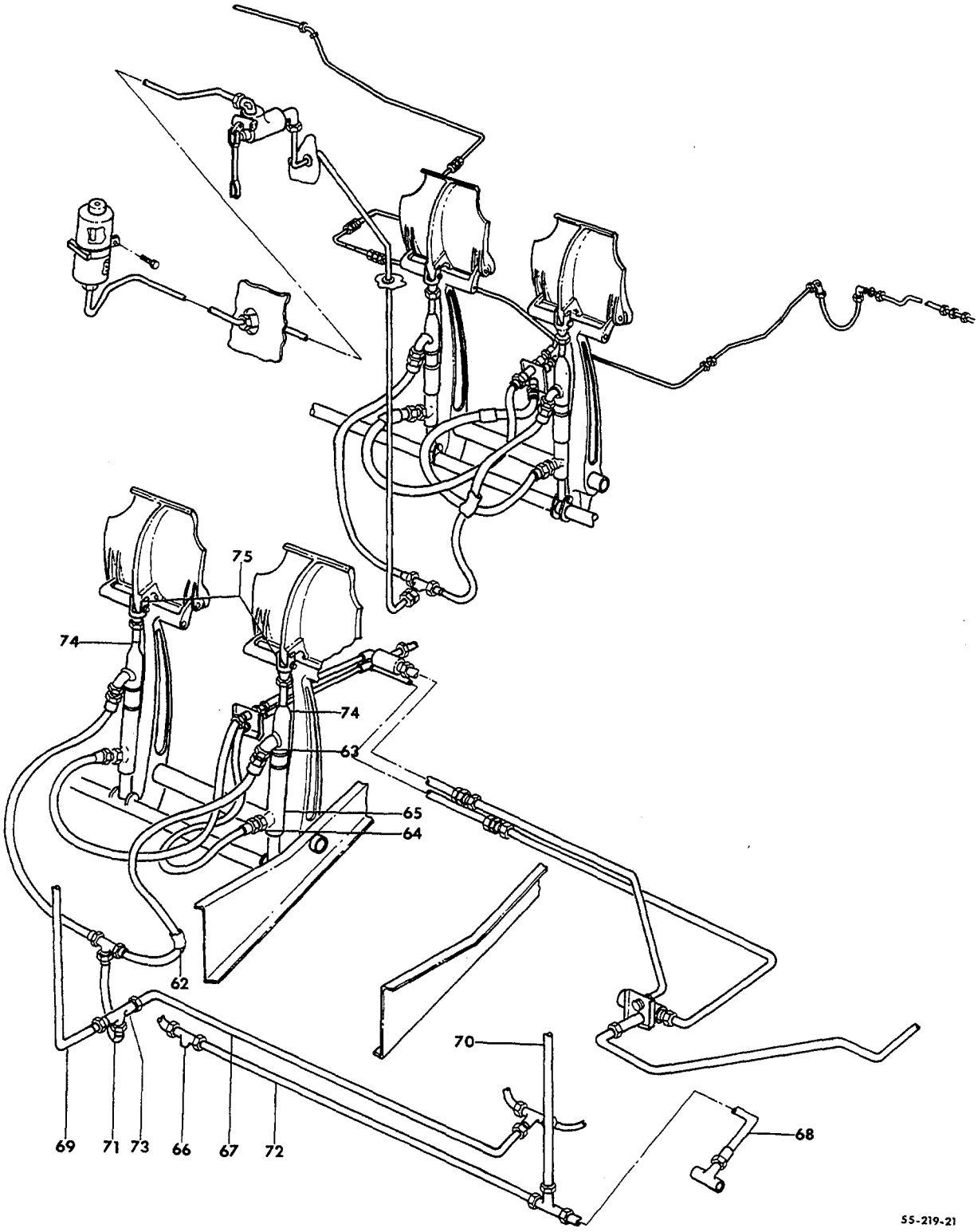

FIGURE 40-30.BRAKE PLUMBING
/SHEET 4 OF 4 SHEETS/

SUB-SECT UNIT & ITEM NO.	PART NO.	DESCRIPTION 1 2 3 4 5 6 7	UNITS PER ASSY	USABLE ON CODE
40-30 - 62	106242-10	. TUBE.	4	3
- 63	MS20823-4	. ELBOW,45 DEGREE/UPPER LH/	1	3
	MS20822-4	. ELBOW,90 DEGREE/UPPER RH.	1	3
- 64	MS20822-4	. ELBOW,90 DEGREE/LOWER/.	1	3
- 65	VV15-625-2	. CYLINDER ASSY,BRAKE MASTER/SUPERSEDES . . . . VV15-625-1,SEE CHAPTER 32-40-40/	2	6
	96-380034-1	. CYLINDER ASSY,BRAKE MASTER/SEE. . . . . CHAPTER 32-40-41/	2	7
- 66	AN804-4D	. TEE	1	3
	AN960-716	. WASHER.	1	3
	AN924-4D	. NUT	1	3
- 67	95-810019-21	. TUBE ASSY	1	8
- 68	95-810019-31	. TUBE ASSY	1	9
- 69	95-810019-23	. TUBE ASSY	1	8
- 70	95-810019-29	. TUBE ASSY	1	9
- 71	95-810019-25	. TUBE ASSY	1	8
- 72	95-810019-33	. TUBE ASSY	1	9
- 73	AN824-4D	. TEE	1	3
- 74	35-815006-24	. COVER,MASTER CYLINDER	2	3
- 75	850795-1	. CLEVIS,MASTER CYLINDER.	2	3
R	95-940011-5	CONTROL,PARKING BRAKE/PUSH-PULL/.	1	2

CODES OF EFFECTIVITY

1	TC-1 THRU TC-1221	2	TE-1 THRU TE-694
3	TC-1 THRU TC-1221 TE-1 THRU TE-694	4	TC-1 THRU TC-420
5	TC-421 THRU TC-1221 TE-1 THRU TE-694	6	TC-1 THRU TC-998
7	TC-999 THRU TC-1221 TE-1 THRU TE-694	8	TC-1 THRU TC-190
9	TC-191 THRU TC-1221		

"END"

32-40-31
BRAKE PLUMBING
TC-1222 THRU TC-1607
TE-695 THRU TE-942 EXCEPT TE-938

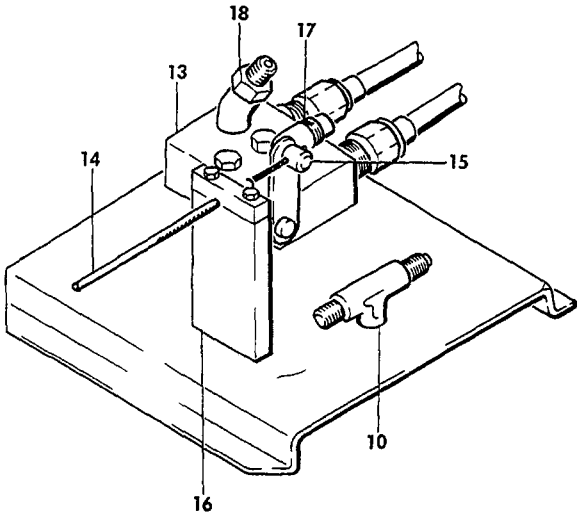

VIEW A

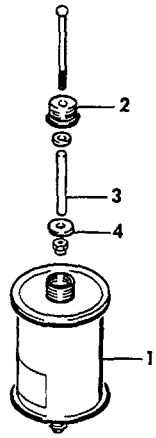

VIEW B

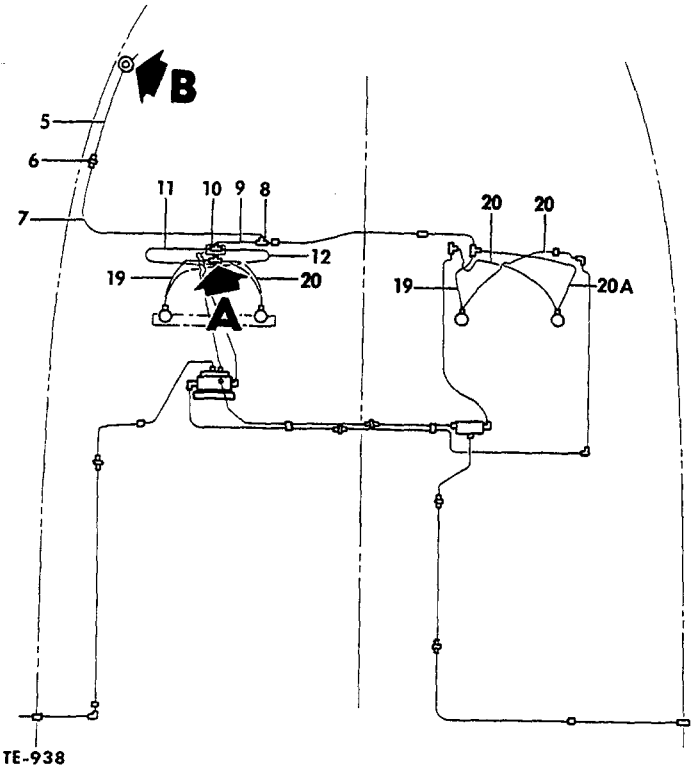

TC-1222 thru TC-1607
TE-695 thru TE-942 except TE-938

55-219-15

FIGURE 40-31. BRAKE PLUMBING
/SHEET 1 OF 3 SHEETS/

SUB-SECT UNIT & ITEM NO.	PART NO.	DESCRIPTION 1 2 3 4 5 6 7	UNITS PER ASSY	USABLE ON CODE
40-31	95-814005-101	BRAKE PLUMBING INSTL/SINGLE BRAKES/	NP	1
	95-814005-103	BRAKE PLUMBING INSTL/SINGLE BRAKES/	NP	2
	95-810019-101	BRAKE PLUMBING INSTL/DUAL BRAKES/	NP	1
	95-810019-105	BRAKE PLUMBING INSTL/DUAL BRAKES/	NP	2
	35-815180-8	. RESERVOIR ASSY,HYDRAULIC BRAKE FLUID.	1	3
		/ATTACHING PARTS/		
	35-415330-82	. CLAMP	1	
	AN520-10-10	. SCREW	1	
		----*----		
- 1	112136-4	. . CAN ASSY.	1	3
- 2	35-815180-4	. . CAP ASSY.	1	3
	35-815180-2	. . . CAP	1	3
	AN526-632-40	. . . SCREW	1	3
	AN960-6	. . . WASHER.	1	3
- 3	35-815180-6	. . . SPACER.	1	3
- 4	100951DD032VA	. . . WASHER.	1	3
	MS20365-632	. . . NUT	1	3
- 5	95-814005-109	. TUBE ASSY	1	3
- 6	AN832-4D	. UNION	1	3
- 7	95-814005-111	. TUBE ASSY	1	1
	95-814005-113	. TUBE ASSY	1	2
- 8	AN824-4D	. TEE/DUAL ONLY/.	1	3
- 9	95-810019-119	. TUBE ASSY/DUAL ONLY/.	1	3
- 10	AN834-4D	. TEE	1	3
	AN960-716	. WASHER.	2	3
	AN924-4D	. NUT	1	3
- 11	MS28741-4-0152	. HOSE ASSY	1	3
	106242-10	. TUBE,HOSE REINFORCEMENT	1	3
- 12	MS28741-4-0156	. HOSE ASSY	1	3
	106242-10	. TUBE,HOSE REINFORCEMENT	1	3
- 13 R	HE7002-3	. VALVE ASSY,PARKING BRAKE/SEE CHAPTER 32-40-61	1	3
	A850-8	. VALVE ASSY,PARKING BRAKE/ALTERNATE.	1	3
		FOR HE7002-3,SEE CHAPTER 32-40-61/		
		/ATTACHING PARTS/		
	AN3-12A/M/	. BOLT.	2	
	AN960-10	. WASHER.	2	
	NAS697A3	. NUTPLATE.	2	
		----*----		
- 14	35-380063-9	. CONTROL,PARKING BRAKE VALVE/PUSH PULL/.	1	3
- 15	36-580011	. SWIVEL,CONTROL CABLE ATTACHMENT	1	3
		/ATTACHING PARTS/		
	AN960-10	. WASHER.	2	
	MS24665-153	. PIN,COTTER.	1	
		----*----		
	AN520-10-6	. SCREW,SWIVEL.	1	3
	AN345-10	. NUT,SWIVEL SCREW STOP	1	3
- 16	50-580027-37	. BLOCK,PARKING BRAKE VALVE CONTROL CABLE	1	3
	50-580027-39	. BLOCK,PARKING BRAKE VALVE CONTROL CABLE	1	3
		/ATTACHING PARTS/		
	AN3-25A/M/	. BOLT.	2	
	AN960-10	. WASHER.	2	
	NAS43DD3-46	. SPACER.	2	
	NAS686A3	. NUTPLATE.	2	
		----*----		
- 17	MS20822-4D	. ELBOW/90 DEGREE/.	1	3
- 18	MS20823-4D	. ELBOW/45 DEGREE/.	1	3
- 19	MS28741-4-0126	. HOSE ASSY	2	3
- 20	MS28741-4-0107	. HOSE ASSY	3	3
- 20A	MS28741-4-0120	. HOSE ASSY	1	3
	106242-10-0080	. TUBE,HOSE REINFORCEMENT	6	3

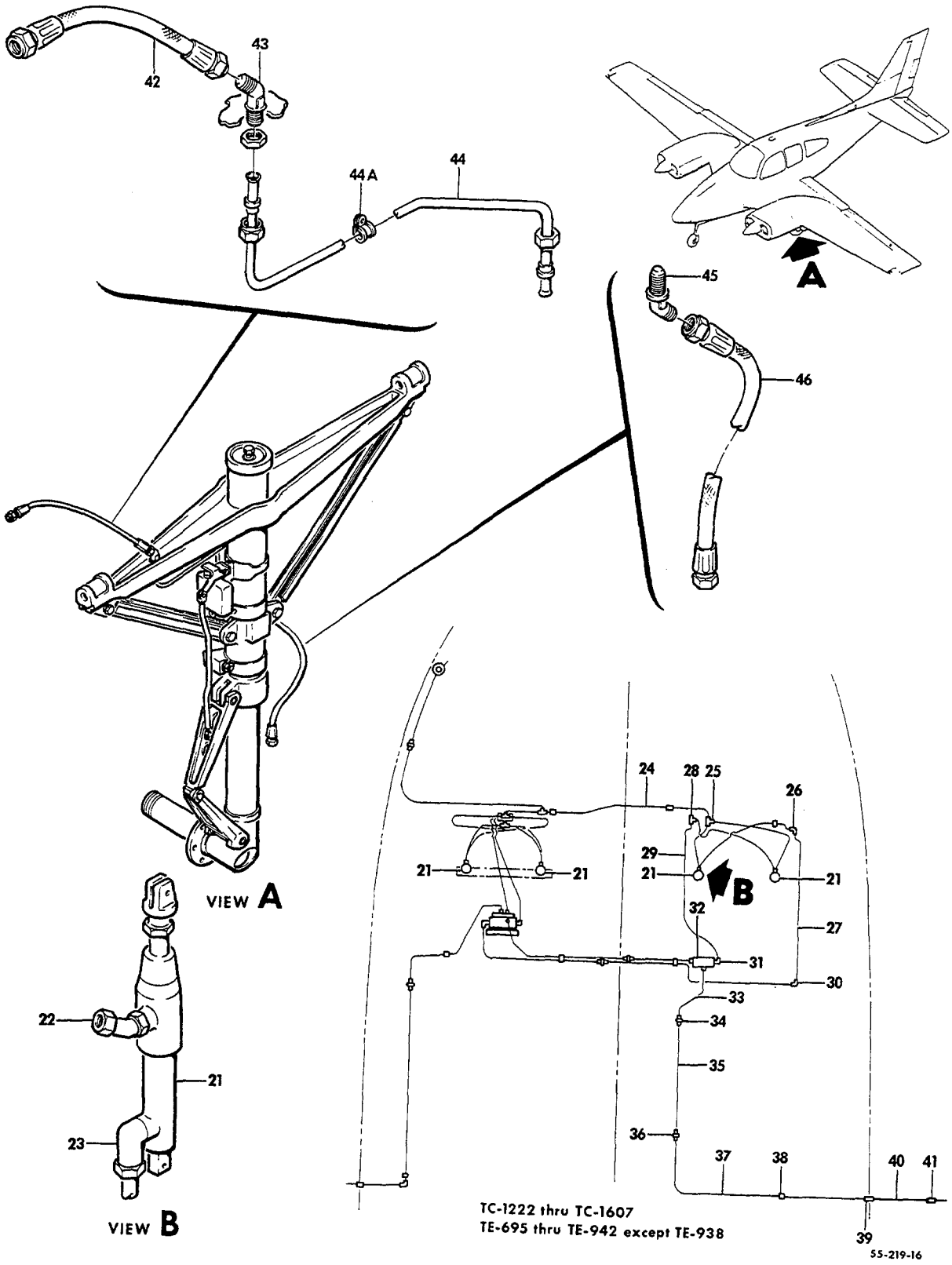

FIGURE 40-31.BRAKE PLUMBING
/SHEET 2 OF 3 SHEETS/

SUB-SECT UNIT & ITEM NO.	PART NO.	DESCRIPTION 1 2 3 4 5 6 7	UNITS PER ASSY	USABLE ON CODE
40-31 - 21	96-380034-1	CYLINDER ASSY,BRAKE MASTER/SEE CHAPTER 32-40-41/	4	3
	35-815006-24	COVER,MASTER CYLINDER	4	3
- 22	MS20822-4	ELBOW/90 DEGREE,PILOT BRAKES/	2	3
	MS20823-4	ELBOW/45 DEGREE,COPILOT BRAKES/	2	3
- 23	MS20822-4	ELBOW/90 DEGREE/	4	3
- 24	95-810019-121	TUBE ASSY/DUAL ONLY/	1	3
	AN931-4-7	GROMMET,TUBE	2	3
- 25	AN804-4D	TEE/DUAL ONLY/	1	3
	AN960-716	WASHER	2	3
	AN924-4D	NUT	1	3
- 26	AN821-4D	ELBOW/90 DEGREE,DUAL ONLY/	1	3
- 27	95-810019-35	TUBE/DUAL ONLY/	1	3
- 28	95-810019-39	ELBOW/DUAL ONLY/	1	3
	AN924-4D	NUT,ELBOW/DUAL ONLY/	1	3
	AN929-4	CAP ASSY,ELBOW/DUAL ONLY/	1	3
- 29	95-810019-41	TUBE ASSY/DUAL ONLY/	1	3
- 30	AN833-4D	ELBOW/90 DEGREE,DUAL ONLY/	1	3
- 31	MS20822-4D	ELBOW/90 DEGREE,DUAL ONLY/	1	3
- 32	50-380079-1	VALVE ASSY,BRAKE SHUTTLE/DUAL ONLY,SEE CHAPTER 32-40-50/	2	3
	50-380079-3	VALVE ASSY,BRAKE SHUTTLE/SEE CHAPTER 32-40-50 ALTERNATE FOR 50-380079-1,DUAL ONLY/	2	3
- 33	95-810019-17	TUBE ASSY/DUAL ONLY/	1	3
	95-814005-3	TUBE ASSY/SINGLE ONLY/	1	3
	AN931-4-7	GROMMET/DUAL ONLY/	1	3
- 34	AN832-4D	UNION	1	3
- 35	95-814005-9	TUBE ASSY	1	3
- 36	AN815-4D	UNION	1	3
- 37	95-814005-5	TUBE ASSY	1	3
- 38	MS21919G4	CLAMP,TUBE SUPPORT /ATTACHING PARTS/	3	3
	AN520-10-8	SCREW	1	
	AN960-10	WASHER	1	
	MS20365-1032	NUT	1	
		----*----		
- 39	AN837-4D	ELBOW/45 DEGREE/	1	3
- 40	95-814005-38	TUBE ASSY	1	3
- 41	AN833-4D	ELBOW/90 DEGREE/	1	3
- 42	MS28741-4-0170	HOSE ASSY	1	3
- 43	AN837-4D	ELBOW	1	3
	AN924-4D	NUT	1	3
- 44	95-810002-3	TUBE ASSY,LH	1	1
	95-810002-37	TUBE ASSY,LH	1	2
	95-810002-4	TUBE ASSY,RH	1	1
	95-810002-38	TUBE ASSY,RH /ATTACHING PARTS/	1	2
- 44A	MS21919DG4	CLAMP	1	
	AN520-1032	SCREW	1	
	AN960D10	WASHER	1	
	MS20365-1032	NUT	1	
		----*----		
- 45 R	AN837-4D	ELBOW	1	3
	AN960D716	WASHER	3	3
	AN924-4D	NUT	1	3
- 46	MS28741-4-0160	HOSE ASSY	1	3

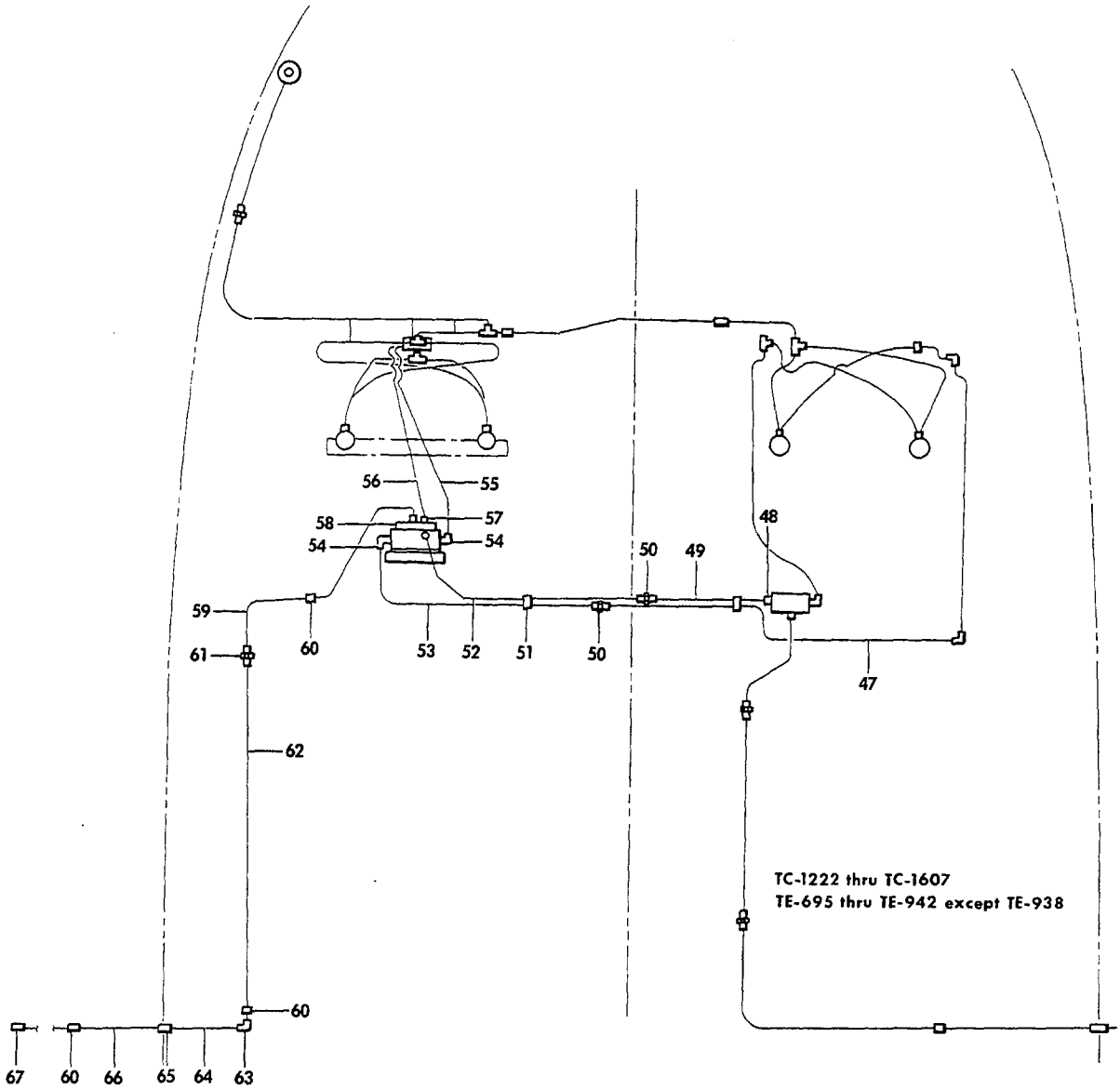

55-219-17

FIGURE 40-31.BRAKE PLUMBING
/SHEET 3 OF 3 SHEETS/

ATA CODE & INDEX NO.	PART NO.	DESCRIPTION 1 2 3 4 5 6 7	UNITS PER ASSY	USABLE ON CODE
40-31 - 47	95-810019-37	TUBE ASSY/DUAL ONLY/	1	3
- 48	AN832-4D	UNION/DUAL ONLY/	1	3
- 49	95-810019-7	TUBE ASSY/DUAL ONLY/	1	3
- 50	AN815-4D	UNION	2	3
- 51	789-4	CLIP,TUBE SUPPORT	2	3
		/ATTACHING PARTS/		
	AN515-8-7	SCREW	2	
	AN960-8	WASHER	2	
	MS20365-832	NUT	2	
		——*——		
- 52	95-810019-9	TUBE ASSY/DUAL ONLY/	1	3
	35-815048	TUBE ASSY/SINGLE ONLY/	1	3
- 53	95-810019-11	TUBE ASSY/DUAL ONLY/	1	3
- 54	MS20822-4D	ELBOW/90 DEGREE,DUAL ONLY/	2	3
- 55	95-810019-107	TUBE ASSY/DUAL ONLY/	1	3
	95-814005-115	TUBE ASSY/SINGLE ONLY/	1	3
- 56	95-810019-109	TUBE ASSY/DUAL ONLY/	1	3
	95-814005-117	TUBE ASSY/SINGLE ONLY/	1	3
- 57	AN837-4D	ELBOW/45 DEGREE/	2	3
- 58	35-815037	BRACKET	1	3
		/ATTACHING PARTS/		
	AN520-10-20	SCREW	2	
	AN960-10	WASHER	4	
	MS20365-1032	NUT	2	
		——*——		
- 59	95-810019-19	TUBE ASSY/DUAL ONLY/	1	3
	35-815069	TUBE ASSY/SINGLE ONLY/	1	3
	AN743-6	BRACKET,TUBE CLAMP SUPPORT	3	3
- 60	MS21919DG4	CLAMP,TUBE SUPPORT	3	3
		/ATTACHING PARTS/		
	AN520-10-8	SCREW	3	
	AN520-10-7	SCREW	3	
	AN960-10	WASHER	6	
	MS20365-1032	NUT	3	
	NAS1329-3-80	RIVNUT	3	
		——*——		
- 61	AN815-4D	UNION	1	3
- 62	35-815095	TUBE ASSY	1	3
- 63	AN821-4D	ELBOW/90 DEGREE/	1	3
- 64	36-580000-15	TUBE ASSY	1	3
- 65	AN833-4D	ELBOW/90 DEGREE/	1	3
- 66	95-814005-37	TUBE ASSY	1	3
- 67	AN833-4D	ELBOW/90 DEGREE/	1	3

CODES OF EFFECTIVITY

1 TC-1222 THRU TC-1607
2 TE-695 THRU TE-942 EXCEPT TE-938
3 TC-1222 THRU TC-1607
TE-695 THRU TE-942
EXCEPT TE-938

"END"

32-40-40
BRAKE MASTER CYLINDER
TC-1 THRU TC-998

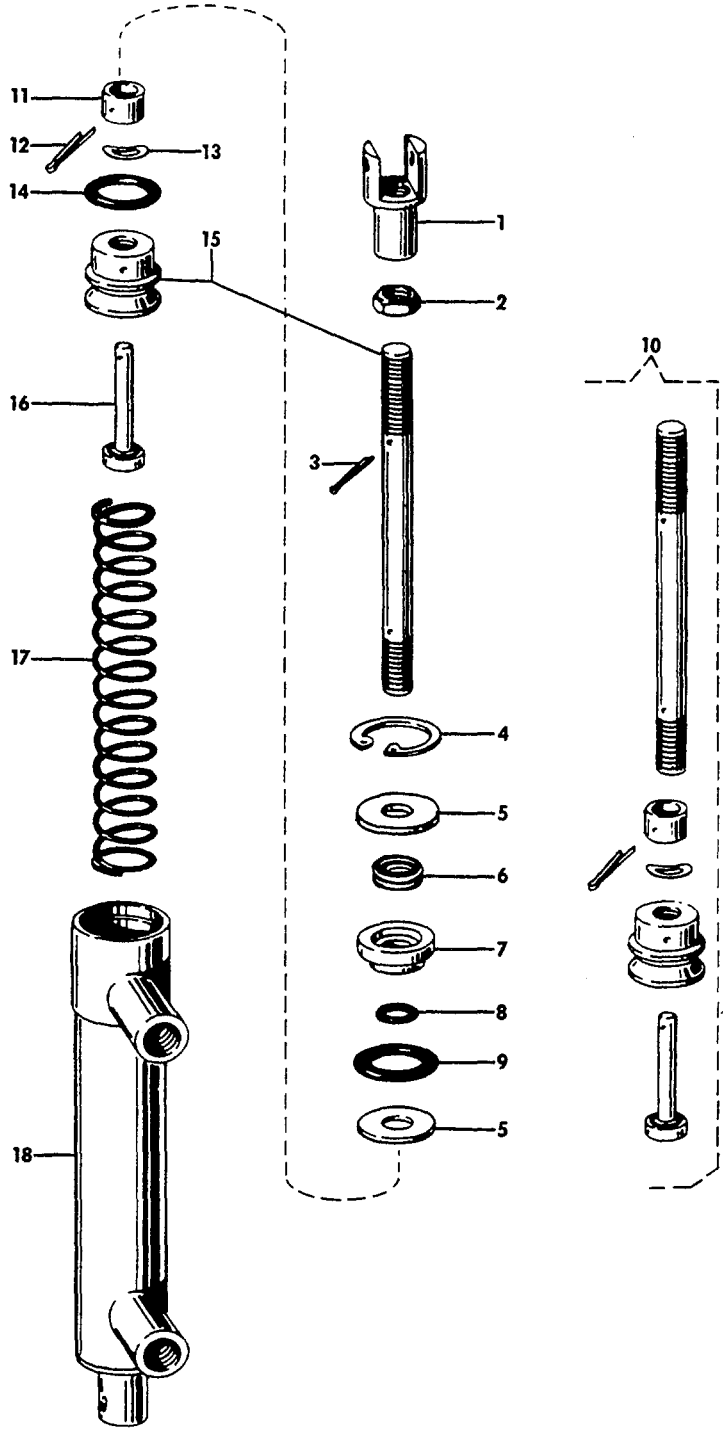

55-220-5

FIGURE 40-40. BRAKE MASTER CYLINDER

ATA CODE & INDEX NO.	PART NO.	DESCRIPTION 1 2 3 4 5 6 7	UNITS PER ASSY	USABLE ON CODE
40-40	VV15-625-1	BRAKE MASTER CYLINDER	NP	1
	VV15-625-2	BRAKE MASTER CYLINDER/SUPERSEDES VV15-625-1/.	4	2
- 1	A57G105	. CLEVIS.	1	1
	A57G400	. CLEVIS.	1	2
- 2	AN316-4	. NUT	1	1
	AN316-5	. NUT	1	2
- 3	AN380C2-2	. PIN,COTTER.	1	3
- 4	5000-68	. RING,TRUARC SNAP.	1	1
	5000-77	. RING,TRUARC SNAP.	1	2
- 5	A57G107	. WASHER,RETAINING.	2	1
	A57G395	. WASHER,RETAINING.	2	2
- 6	109010	. WIPER,ROD	1	1
	A57G401	. WIPER,ROD	1	2
- 7	A57G118	. GUIDE,PISTON.	1	1
	A57G399	. GUIDE,PISTON.	1	2
- 8	AN6227B5	. RING,O.	1	1
	AN6227B6	. RING,O.	1	2
- 9	AN6227B10	. RING,O.	1	1
	AN6227B11	. RING,O.	1	2
- 10	A57G336	. PISTON AND PUSH ROD ASSY.	1	1
	A57G394	. PISTON AND PUSH ROD ASSY.	1	2
- 11	A57G109	. . VALVE,STOP.	1	1
	A50H011	. . VALVE,STOP.	1	2
- 12	AN380C2-2	. . PIN,COTTER.	1	3
- 13	3536-18	. . WASHER,SHAKEPROOF	1	1
	3502-18-24-0511	. . WASHER,SHAKEPROOF	1	2
- 14	AN6227B9	. . RING,O.	1	3
- 15	A57G334	. . PISTON AND ROD.	1	1
	A57G396	. . PISTON AND ROD.	1	2
- 16	A57G113	. . VALVE ASSY.	1	1
	A47G032	. . VALVE ASSY.	1	2
- 17	A57G111	. SPRING.	1	3
- 18	A57G104	. CYLINDER ASSY	1	1
	A57G393	. CYLINDER ASSY	1	2

CODES OF EFFECTIVITY

1 TC-1 THRU TC-954 2 TC-955 THRU TC-998
3 TC-1 THRU TC-998

"END"

32-40-41
BRAKE MASTER CYLINDER
TC-999 THRU TC-1607
TE-1 THRU TE-942 EXCEPT TE-938

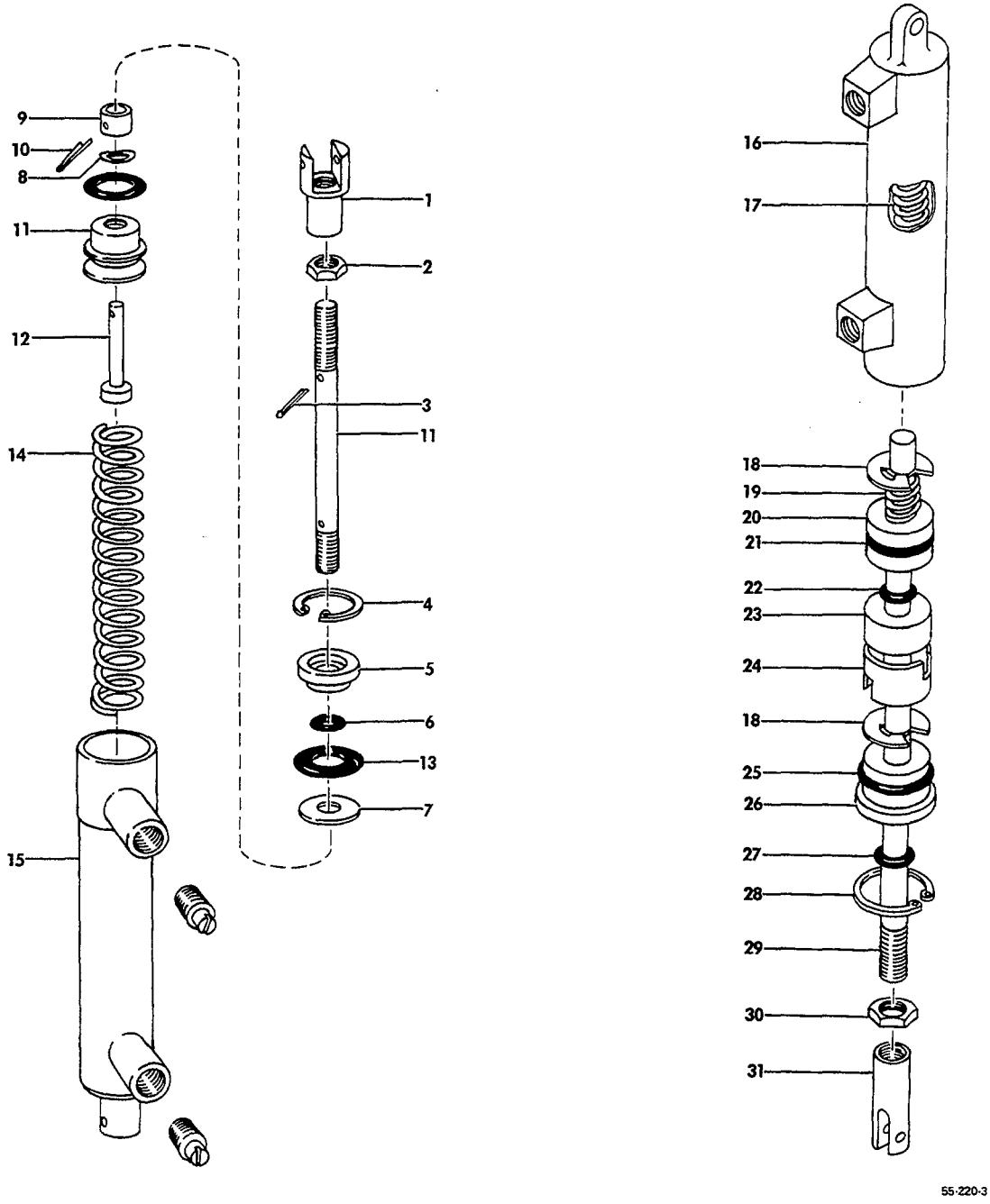

FIGURE 40-41.BRAKE MASTER CYLINDER

SUB-SECT UNIT & ITEM NO.		PART NO.	DESCRIPTION 1 2 3 4 5 6 7	UNITS PER ASSY	USABLE ON CODE
40-41		96-380034-1	CYLINDER ASSY,MASTER/HYDROMOTIVE/	4	1
- 1		A57G400	. CLEVIS.	1	1
- 2		AN316-5	. NUT	1	1
- 3	R	AN380C2-2	. PIN,COTTER.	1	1
- 4		5000-77	. RING,TRUARC SNAP.	1	1
- 5		A47G389	. BUSHING,GUIDE	1	1
- 6		AN6227B6	. RING,O.	1	1
- 7		A57G395	. WASHER.	1	1
		A47G387	. PISTON ASSY	1	1
- 8		3502-18-24-0511	. . WASHER,SPRING	1	1
- 9		A50H011	. . VALVE,STOP.	1	1
- 10		A606	. . PIN,MODIFIED COTTER	1	1
- 11		A47G388	. . PISTON AND ROD ASSY	1	1
- 12		A47G032-1	. . VALVE ASSY.	1	1
- 13		AN6227B11	. RING,O.	2	1
- 14		A47G385	. SPRING,RETURN	1	1
- 15		A47G386	. CYLINDER ASSY	1	1
		96-380034-1	CYLINDER ASSY,MASTER/GERDES/.	4	1
- 16		A141A	. BRAKE HOUSING	1	1
- 17		A1203A	. SPRING.	1	1
- 18		X5133-21	. RING,TRUARC SNAP.	2	1
- 19		A113A	. SPRING.	1	1
- 20		A139A	. PISTON.	1	1
- 21		MS28775-113	. RING,O/SUPERSEDES 2-113/.	1	1
- 22		MS28775-008	. RING,O/SUPERSEDES 2-008/.	1	1
- 23		A142A	. SPACER.	1	1
- 24		A086A	. COLLAR,THRUST	1	1
- 25		11-016	. RING,O.	1	1
- 26		A116A	. END CAP AND BEARING	1	1
- 27		MS28775-011	. RING,O.	1	1
- 28		N5000-81MD	. RING,TRUARC SNAP.	1	1
- 29		A137A	. SHAFT	1	1
- 30		AN316-5	. NUT,LOCK.	1	1
- 31		A091A	. CLEVIS.	1	1

CODES OF EFFECTIVITY

1 TC-999 THRU TE-1607
TE-1 THRU TE-942
EXCEPT TE-938

32-40-50
BRAKE SHUTTLE VALVE

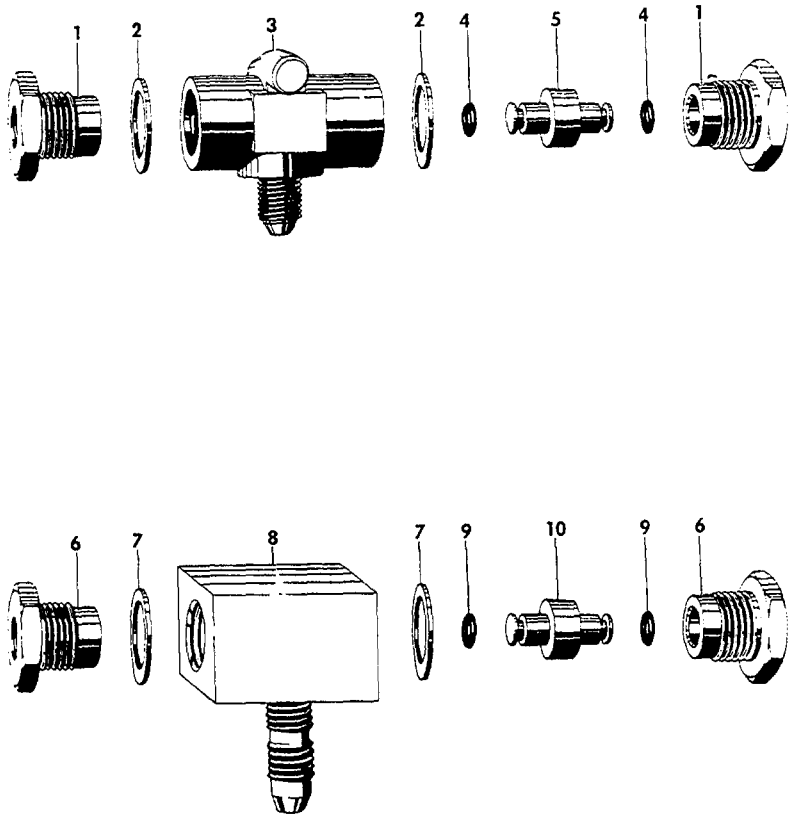

200-221-1

FIGURE 40-50.BRAKE SHUTTLE VALVE

ATA CODE & INDEX NO.	PART NO.	DESCRIPTION 1 2 3 4 5 6 7	UNITS PER ASSY	USABLE ON CODE
40-50	50-380079-1	VALVE,SHUTTLE	2	1
- 1	A102-15	. FITTING,END	2	1
- 2	HL5	. GASKET	2	1
- 3	A101-22	. BODY,VALVE	1	1
- 4	HL214	. O RING	2	1
- 5	HL837	. PISTON	1	1
	50-380079-3	. VALVE,SHUTTLE/ALTERNATE FOR 50-380079-1/	2	1
- 6	A-SA408	. FITTING,END	2	1
- 7	A-SA405	. WASHER	2	1
- 8	A-SA406	. BODY,VALVE	1	1
- 9	AN6227B3	. O RING	2	1
- 10	A-SA407	. PISTON	1	1

CODES OF EFFECTIVITY

1 TC-1 THRU TC-1607
TE-1 THRU TE-942
EXCEPT TE-938

"END"

32-40-60
PARKING BRAKE VALVE
TC-1 THRU TC-1221,TE-1 THRU TE-694

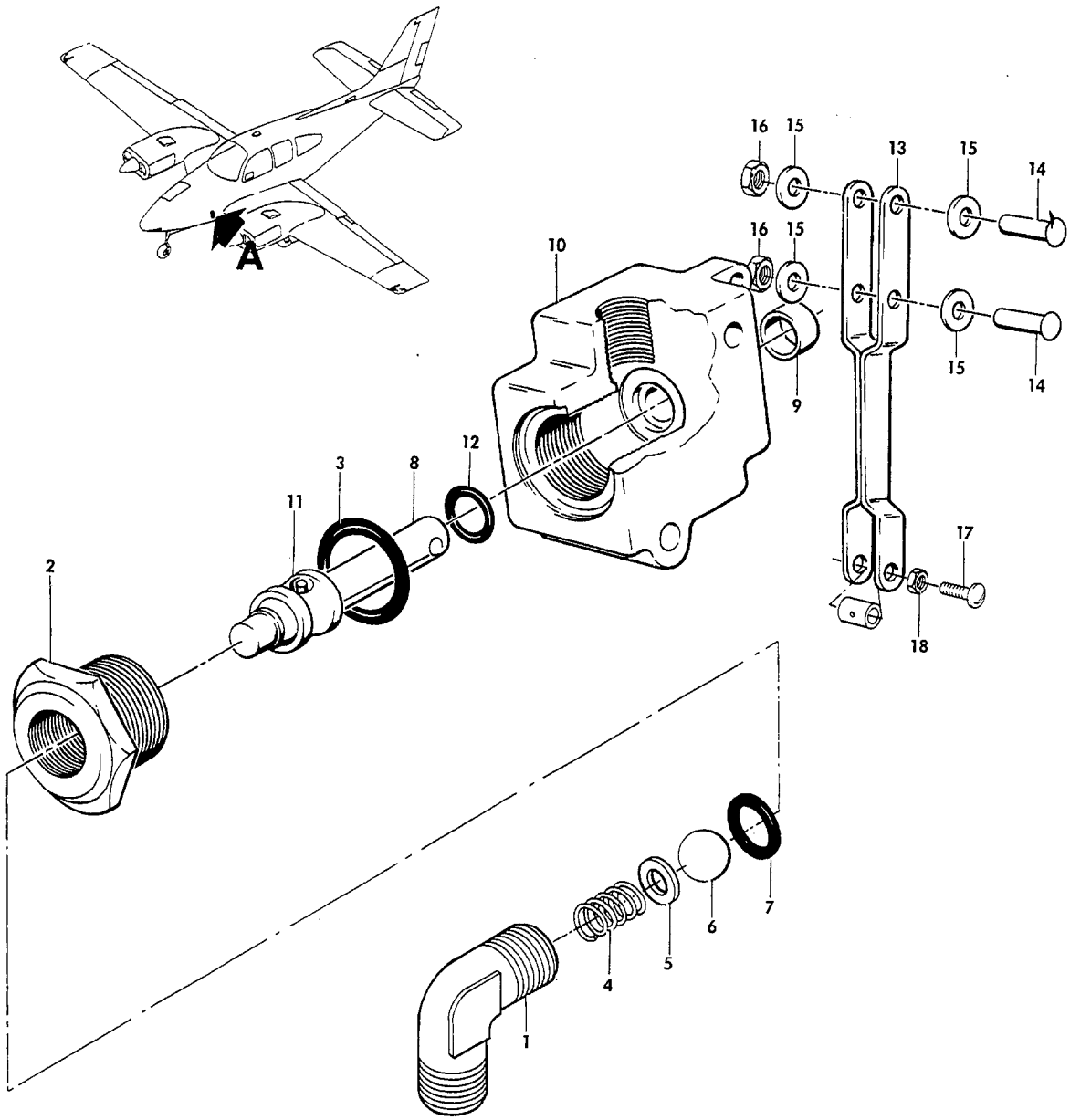

VIEW A

55-222-9

FIGURE 40-60. PARKING BRAKE VALVE

SUB-SECT UNIT & ITEM NO.	PART NO.	DESCRIPTION 1 2 3 4 5 6 7	UNITS PER ASSY	USABLE ON CODE
40-60	35-380065-5	VALVE ASSY,PARKING BRAKE.	1	1
	A164-669	. VALVE ASSY,CHECK.	1	1
- 1	A194-35	. . ELBOW	1	1
- 2	A102-29	. . FITTING,END	1	1
- 3	HL200	. . GASKET,END FITTING.	1	1
- 4	A110-99	. . SPRING.	1	1
- 5	A117-133	. . WASHER,SPRING SEAT.	1	1
- 6	A134-9	. . BALL,POLISHED STEEL	1	1
- 7	A106-502	. . O RING.	1	1
- 8	A164-454	. PISTON ASSY	1	1
- 9	A150-126	. SPACER,LEVER.	1	1
	A164-668	. BODY ASSY,VALVE	1	1
- 10	A101-353	. . BODY.	1	1
- 11	A129-48	. . RETAINER,BUSHING.	1	1
- 12	HL338	. . O RING.	1	1
- 13	R A104-188	. LEVER ASSY.	1	1
		/ATTACHING PARTS/		
- 14	A116-45	. PIN	2	
- 15	A117-133	. WASHER/INSTALL ONE ON EACH SIDE OF LEVER/ . .	4	
- 16	A115-61	. NUT,SPEED	2	
- 17	A114-176	. SCREW,FILLISTER HEAD.	1	1
- 18	A115-62	. NUT,HEXAGON	1	1

CODES OF EFFECTIVITY

1 TC-1 THRU TC-1221
TE-1 THRU TE-694

"END"

32-40-61
PARKING BRAKE VALVE
TC-1222 THRU TC-1607
TE-695 THRU TE-942 EXCEPT TE-938

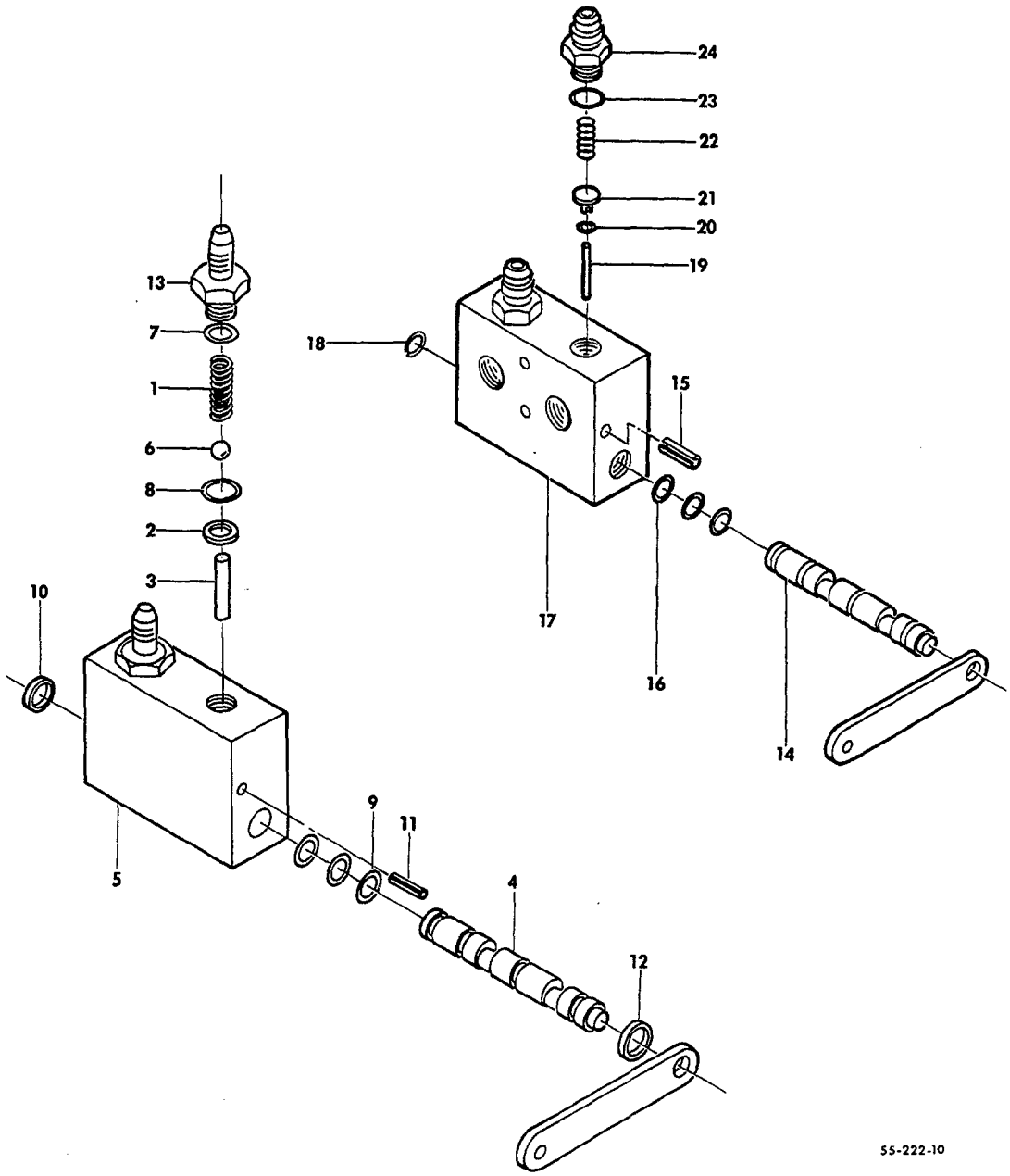

FIGURE 40-61.PARKING BRAKE VALVE

ATA CODE & INDEX NO.	PART NO.	DESCRIPTION 1 2 3 4 5 6 7	UNITS PER ASSY	USABLE ON CODE
40-61	HE7002-3	VALVE ASSY,PARKING BRAKE.	1	1
- 1	HE1793	. SPRING.	2	1
- 2	HE1902	. SEAL.	2	1
- 3	HE1903	. PIN	2	1
- 4	HE1905-1	. LEVER ASSY,CAM.	1	1
- 5	HE1906	. BODY,VALVE.	1	1
- 6	7/32 DIA	. BALL,STEEL.	2	1
- 7	AN6290-4	. O RING.	2	1
- 8	AN6227B7	. O RING.	2	1
- 9	AN6227B5	. O RING.	3	1
- 10	5100-37	. RING,RETAINING.	1	1
- 11	79-022-094-0375	. PIN,ROLL.	1	1
- 12	HE1373	. WASHER.	1	1
- 13	HE1900-4	. FITTING	2	1
	A850-8	VALVE ASSY,PARKING BRAKE/ALTERNATE FOR HE7002-3	1	1
- 14	A865A1	. CAMSHAFT.	1	1
- 15	21S125-0250	. PIN,ROLL.	1	1
- 16	MS28775-010	. O RING/SUPERSEDES 2-010/.	3	1
- 17	A889B	. BODY,VALVE.	1	1
- 18	N5100-37MD	. RING,SNAP	1	1
- 19	28420-093-10	. PIN,DOWEL	2	1
- 20	N507-90-006	. O RING/SUPERSEDES 2-006/.	2	1
- 21	A1384A	. VALVE,POPPET.	2	1
- 22	A1259A	. SPRING.	2	1
- 23	MS28775-012	. O RING.	2	1
- 24	A867A	. FITTING	2	1

CODES OF EFFECTIVITY

1 TC-1222 THRU TC-1607
TE-695 THRU TE-942
EXCEPT TE-938

"END"

32-50-01
NOSE WHEEL STEERING INSTALLATION

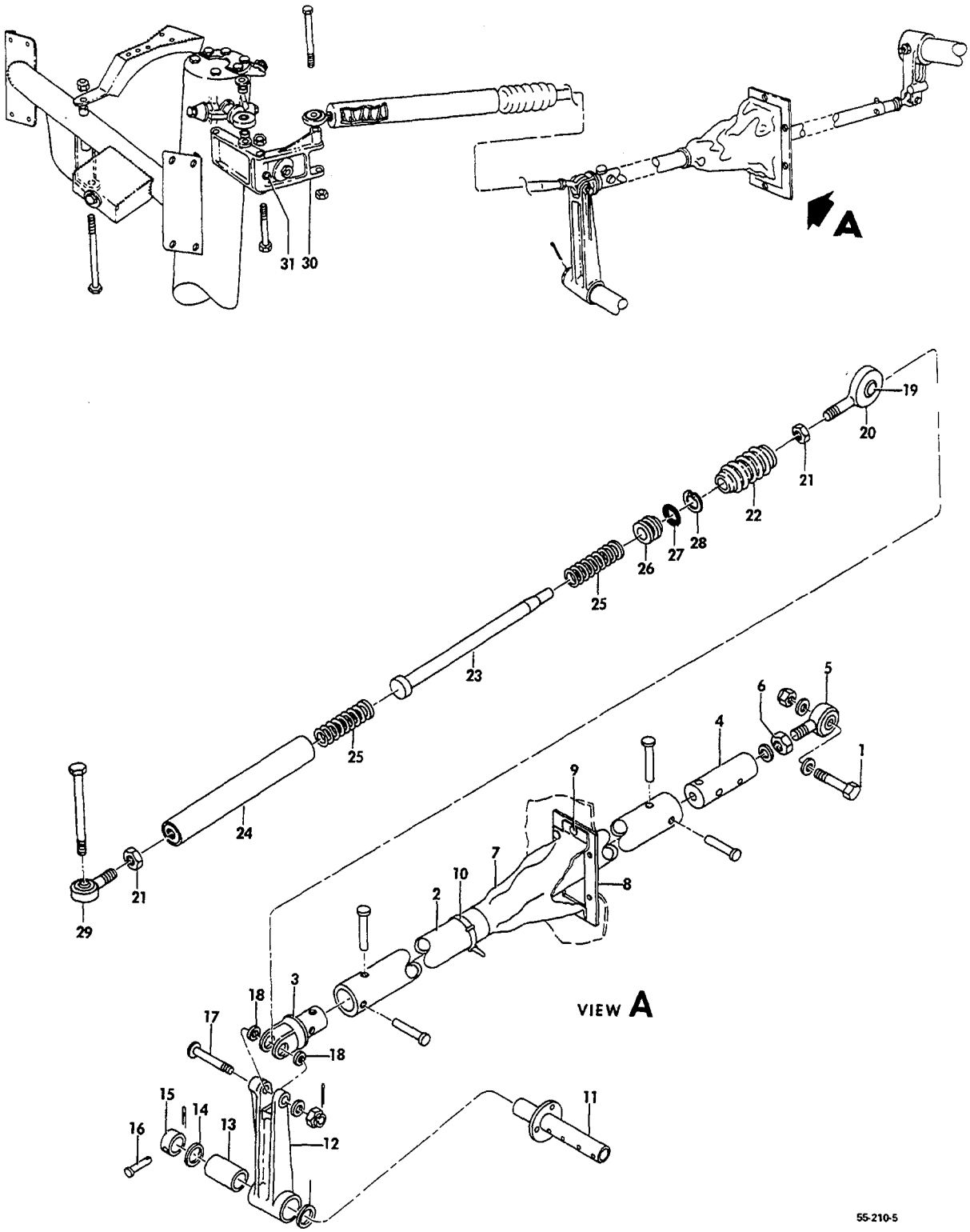

FIGURE 50-01.NOSE GEAR STEERING
/SHEET 1 OF 3 SHEETS/

ATA CODE & INDEX NO.	PART NO.	DESCRIPTION 1 2 3 4 5 6 7	UNITS PER ASSY	USABLE ON CODE
50-01	35-825160	STEERING INSTL,NOSE WHEEL	NP	1
	96-820013	STEERING INSTL,NOSE WHEEL	NP	2
	35-825044-4	. ROD ASSY,AFT NOSE GEAR STEERING	1	1
	96-820014	. ROD ASSY,AFT NOSE GEAR STEERING	1	2
		/ATTACHING PARTS/		
- 1	AN4-13A	. BOLT	1	
	AN960-416	. WASHER	2	
	MS20365	. NUT	1	
		——*——		
	NO NUMBER	. . TUBE ASSY	NP	1
	96-820014-5	. . TUBE ASSY	1	2
- 2	35-825044-6	. . . TUBE	1	1
	96-820014-3	. . . TUBE	1	2
- 3	002-410037-5	. . . END,ROD/SUPERSEDES 35-820045/	1	
- 4	35-825097	. . . SLEEVE	1	
- 5	MD46-15	. . END,ROD	1	
- 6	AN316-6R	. . NUT	1	
	AN960-616L	. . WASHER	1	
- 7	35-825171-1	. BOOT,NOSE GEAR STEERING	1	
- 8	35-825170	. RING,BOOT RETAINING	1	
		/ATTACHING PARTS/		
- 9	49338	. STUD	6	
- 10	MS3367-1	. STRAP	1	
		——*——		
- 11	35-825049	. SHAFT ASSY,STEERING IDLER ARM	1	
	35-825052	. ARM ASSY,STEERING ROD IDLER	1	
- 12	35-825052-2	. . ARM,IDLER	1	
- 13	A779	. . BEARING	1	
- 14	100951S032XL	. WASHER	2	
- 15	35-825051	. COLLAR	1	
		/ATTACHING PARTS/		
- 16	MS20392-1C25	. PIN,CLEVIS	1	
	MS24665-132	. PIN,COTTER	1	
		——*——		
	35-825160-601	. LINK ASSY,FWD NOSE WHEEL STEERING	1	1
	96-820013-601	. LINK ASSY,FWD NOSE WHEEL STEERING	1	2
		/ATTACHING PARTS/		
- 17	AN24-25/M/	. BOLT	1	
- 18	105740X-ZL0104	. BUSHING	2	
	AN960-416L	. WASHER	3	
	AN320-4	. NUT	1	
	MS24665-132	. PIN,COTTER	1	
		——*——		
	35-825161	. . LINK ASSY,NOSE GEAR STEERING	1	
	35-825162	. . . END ASSY,FLEXIBLE STEERING LINK	1	
- 19	35-825162-2	. . . . EYE	1	
- 20	LS4	. . . . BEARING	1	
- 21	AN316-4R	. . . NUT	2	
- 22	3686	. . . BOOT	1	
- 23	35-825163	. . . SHAFT ASSY,NOSE GEAR STEERING	1	
- 24	35-825165	. . . BARREL ASSY,NOSE GEAR STEERING	1	
- 25	100943YD302C	. . . SPRING	2	
- 26	35-825164	. . . BEARING,FLEXIBLE STEERING LINK	1	
- 27	AN6227-13	. . . O RING	1	
- 28	NAS50-87	. . . RING,RETAINING	1	
- 29	HM4	. . . END,ROD	1	
	35-825173	. . LINK ASSY,NOSE GEAR STEERING	1	
- 30	35-825173-2	. . . LINK,NOSE GEAR STEERING	1	
- 31	MS15001-4	. . . FITTING,LUBRICATION	1	

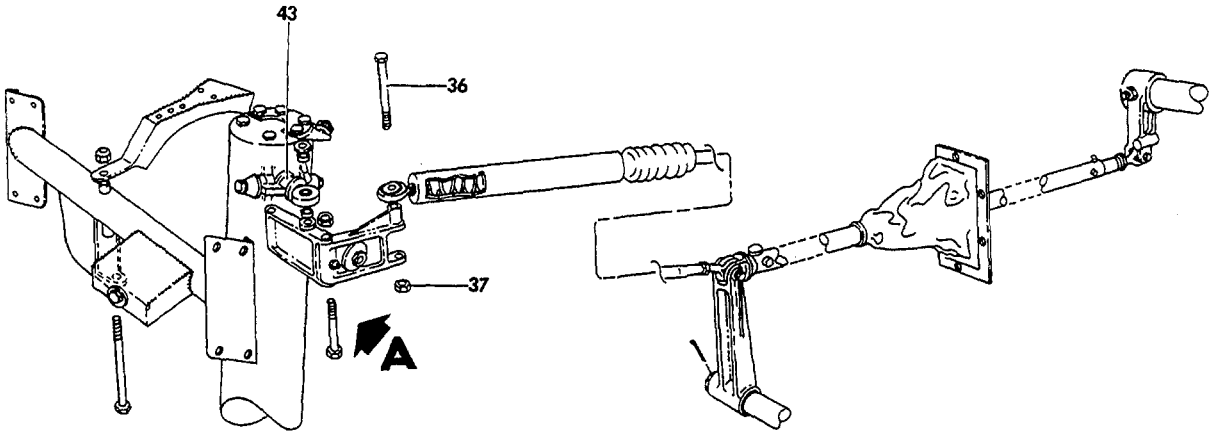

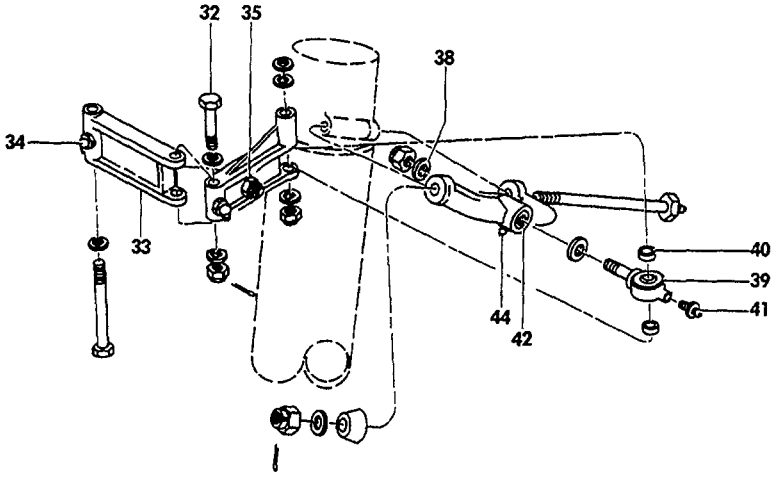

VIEW A

55-210-10

FIGURE 50-01.NOSE GEAR STEERING
/SHEET 2 OF 3 SHEETS/

ATA CODE & INDEX NO.	PART NO.	DESCRIPTION 1 2 3 4 5 6 7	UNITS PER ASSY	USABLE ON CODE
50-01	35-825035	. . LINK ASSY,NOSE GEAR STEERING IDLER CROSS. . /ATTACHING PARTS/	1	
- 32	NAS54-16/M/	. . BOLT.	1	
	AN960-416	. . WASHER.	2	
	AN310-4	. . NUT	1	
	MS24665-132	. . PIN,COTTER.	1	
		----*----		
- 33	35-825035-2	. . . LINK,NOSE GEAR STEERING IDLER CROSS . . .	1	
- 34	MS15001-4	. . . FITTING,LUBRICATION	1	
- 35	35-825046	. . BOLT,NOSE GEAR STOP	1	
	MS20364-428	. . NUT	2	
	35-825006	. . EYE ASSY,NOSE GEAR STEERING SWIVEL. . . . . /ORDER 50-820130-8/	NP	3
	50-820130-4	. . EYE ASSY,NOSE GEAR STEERING SWIVEL. . . . . /SUPERSEDES 35-825006,ORDER 50-820130-8	1	
	50-820130-8	. . EYE ASSY,NOSE GEAR STEERING SWIVEL/SPARE. . REPLACEMENT FOR 35-825006 & 50-820130-4 /ATTACHING PARTS/	1	
- 36	AN174-24A/M/	. . BOLT.	1	
	AN960-416	. . WASHER.	3	
	35-825053	. . SPACER.	2	
- 37	MS21042-4	. . NUT	1	
	MS20002C7	. . WASHER.	1	
- 38	100951X063YH	. . WASHER.	1	
	AN320-5	. . NUT	1	
	MS24665-134	. . PIN,COTTER.	1	
		----*----		
- 39	35-825006-2	. . . EYE,NOSE GEAR STEERING SWIVEL/USED. . . . WITH 35-825006/	1	3
	50-820130-6	. . . EYE,NOSE GEAR STEERING SWIVEL/USED. . . . WITH 50-820130-4/	1	
	50-820130-10	. . . EYE,NOSE GEAR STEERING SWIVEL/USED. . . . WITH 50-820130-8/	1	
- 40	115-384041	. . . BEARING/USED WITH 50-820130-4/.	1	
	LS4	. . . BEARING/USED WITH 35-825006 & 50-820130-8	1	
- 41	1736	. . . FITTING,LUBRICATION/SUPERSEDES AN287-1. . USED WITH 35-825006/	1	3
	NAS516-1	. . . FITTING,LUBRICATION/USED WITH 50-820130-8	1	
	35-825007	. . YOKE ASSY,NOSE GEAR STEERING.	1	
- 42	35-825007-2	. . . YOKE,NOSE GEAR STEERING	1	
- 43	NAS76A7-020	. . . BUSHING	1	
- 44	1736	. . . FITTING,LUBRICATION	1	

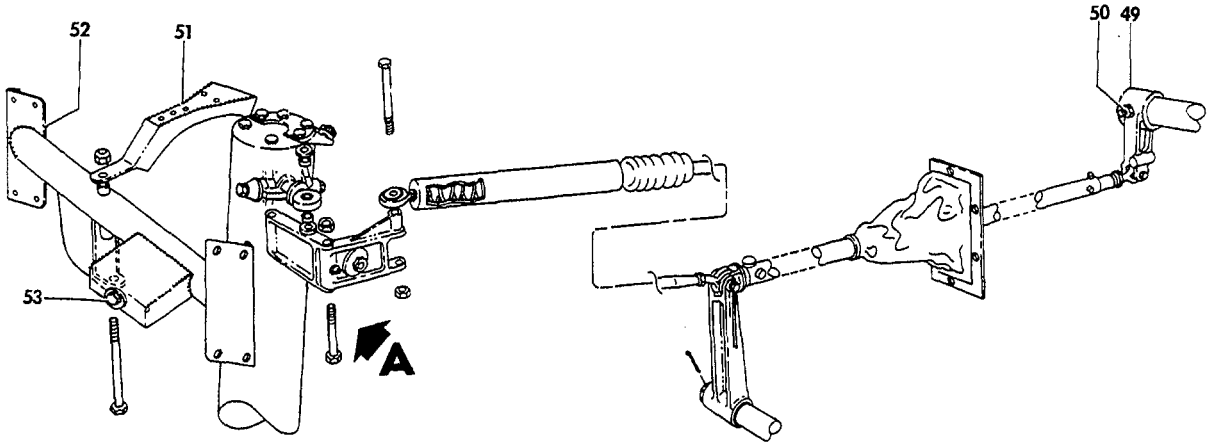

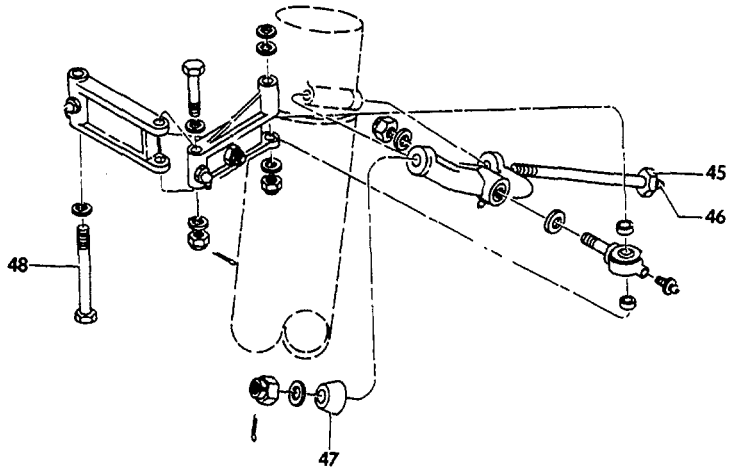

VIEW A

55-210-11

FIGURE 50-01.NOSE GEAR STEERING
/SHEET 3 OF 3 SHEETS/

SUB-SECT UNIT & ITEM NO.	PART NO.	DESCRIPTION 1 2 3 4 5 6 7	UNITS PER ASSY	USABLE ON CODE
50-01 - 45	35-825005	. BOLT ASSY,STEERING YOKE ATTACHING	1	
- 46	1736	. . FITTING,LUBRICATION	1	
	AN960-516L	. WASHER.	2	
- 47	35-825045	. STOP,NOSE GEAR.	1	
	AN310-5	. NUT	1	
	MS24665-134	. PIN,COTTER.	1	
- 48	AN174-34/M/	. BOLT,CROSS LINK ATTACHING	1	
	AN960-416L	. WASHER.	4	
	AN310-4	. NUT	1	
	MS24665-132	. PIN,COTTER.	1	
- 49	35-825054-5	ARM,NOSE STEERING	1	4
	60-820031-11	ARM,NOSE STEERING	1	5
		/ATTACHING PARTS/		
- 50	AN386-2-12A	PIN,TAPERED	1	
	AN960-416L	WASHER.	1	
	AN975-3	WASHER.	1	
	MS20364-1032	NUT	1	
		——*——		
- 51	95-410030-95	TRACK,NOSE GEAR STRAIGHTENER.	1	4
	96-820030	TRACK,NOSE GEAR STRAIGHTENER.	1	5
- 52	R 002-410032-17	SUPPORT ASSY,NOSE GEAR STRAIGHTENER	1	
- 53	35-825046	BOLT,NOSE WHEEL STOP.	1	
	MS20364-428	NUT	1	
	AN366F428	NUTPLATE.	1	

CODES OF EFFECTIVITY

1 TC-1 THRU TC-1607
2 TE-1 THRU TE-942 EXCEPT TE-938
3 TC-1 THRU TC-1607 TE-1 THRU TE-767
4 TC-1 THRU TC-1607 TE-1 THRU TE-300
5 TE-301 THRU TE-942 EXCEPT TE-938

"END"

32-50-10
NOSE SHIMMY DAMPER

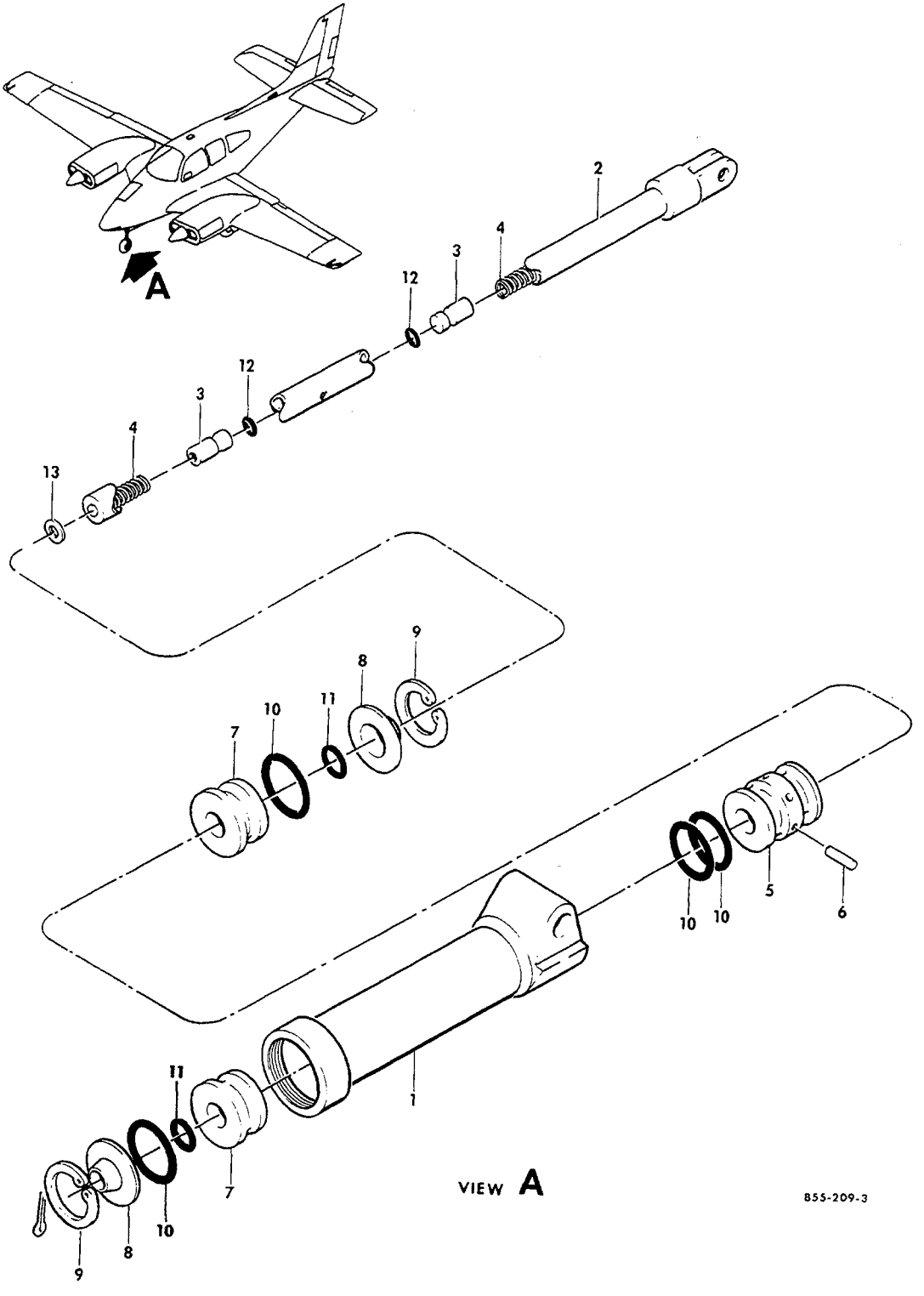

FIGURE 50-10.NOSE GEAR SHIMMY DAMPER

SUB-SECT UNIT & ITEM NO.	PART NO.	DESCRIPTION 1 2 3 4 5 6 7	UNITS PER ASSY	USABLE ON CODE
50-10	R 35-825145-2	DAMPER ASSY,NOSE GEAR SHIMMY.	1	
- 1	35-825146	. BARREL,SHIMMY DAMPER.	1	
- 2	35-825148	. ROD ASSY,PISTON	1	
- 3	35-825152	. PISTON,FLOATING	2	
- 4	100943ZE316G	. SPRING,FLOATING PISTON.	2	
- 5	35-825147	. PISTON,SHIMMY DAMPER.	1	
- 6	102809-093-026	. PIN,PISTON RETAINING.	1	
- 7	35-825151	. END,SHIMMY DAMPER	2	
- 8	111190-14	. RING,PISTON SCRAPER	2	
- 9	NAS50-93	. RING,INTERNAL RETAINER.	2	
- 10	AN6227B13	. O RING.	4	
- 11	AN6227B7	. O RING.	2	
- 12	AN6227B1	. O RING.	2	
- 13	AN960-3	. WASHER.	1	
	MS24665-281	. PIN,COTTER/SUPERSEDES AN380-3-2/.	1	

32-60-01
LANDING GEAR POSITION,SAFETY AND WARNING
TC-350,TC-1024 THRU TC-1607
TE-252 THRU TE-942 EXCEPT TE-938

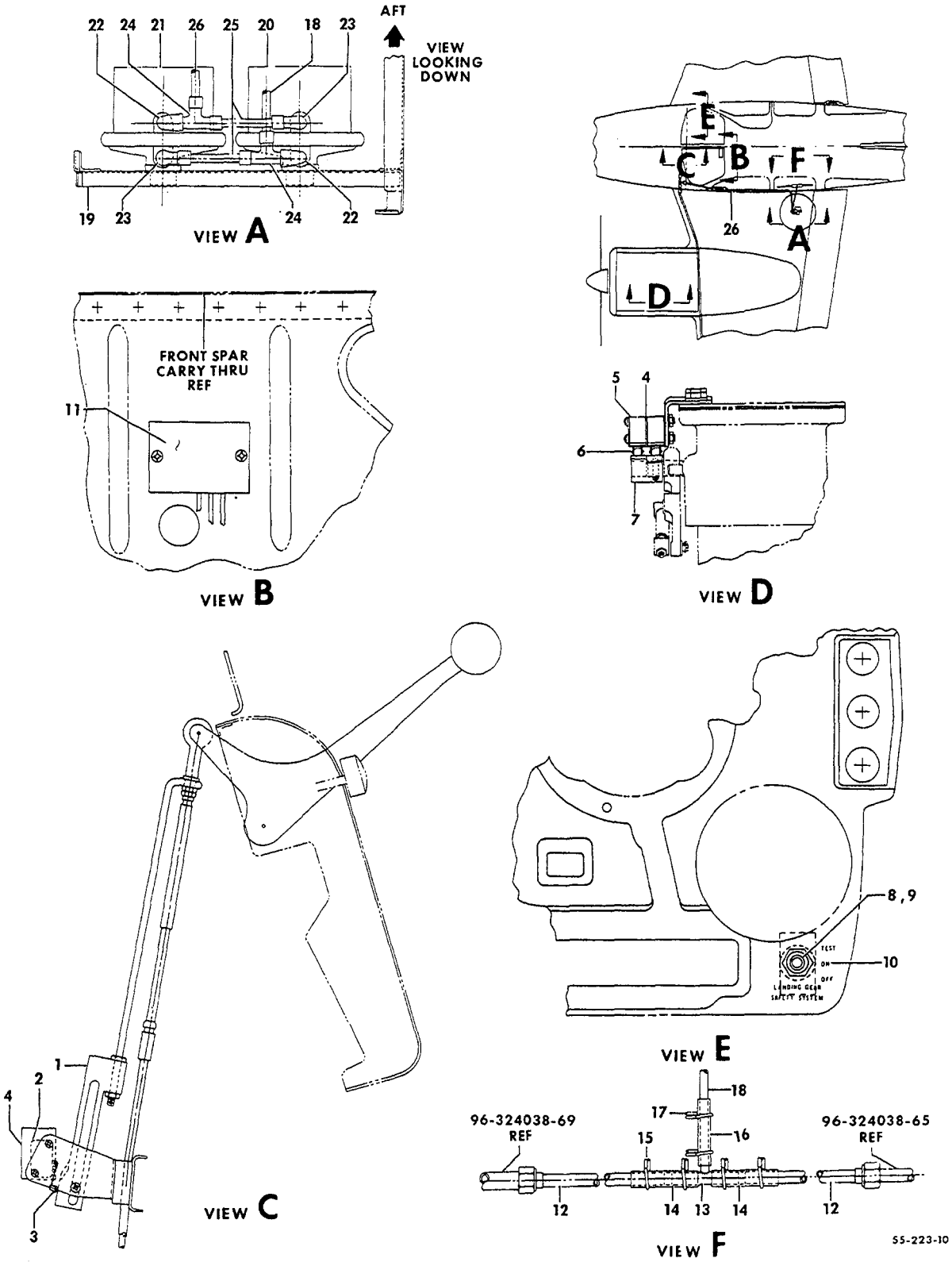

FIGURE 60-01.LANDING GEAR POSITION,SAFETY AND WARNING/SHEET 1 OF 2 SHEETS/

ATA CODE & INDEX NO.	PART NO.	DESCRIPTION 1 2 3 4 5 6 7	UNITS PER ASSY	USABLE ON CODE
60-01	96-810022-1	LANDING GEAR SAFETY SYSTEM INSTL.	NP	1
	96-810022	LANDING GEAR SAFETY SYSTEM INSTL.	NP	2
- 1	96-810022-43	. CAM,LH.	1	1
	96-810022-44	. CAM,RH.	1	1
- 2	AN3234-2	. SWITCH.	2	1
- 3	JV20	. ACTUATOR.	2	1
		/ATTACHING PARTS/		
	AN515-4R18	. SCREW	2	
	AN960-4	. WASHER.	2	
	MS20365-440	. NUT	2	
		——*——		
- 4	50-364108	. INSULATOR	2	3
- 5	AN3234-2	. SWITCH.	2	2
- 6	JV5	. ACTUATOR.	2	2
		/ATTACHING PARTS/		
	AN515-4R18	. SCREW	2	
	AN960-4	. WASHER.	2	
	MS20365-440	. NUT	2	
		——*——		
- 7	96-810022-37	. CAM	2	2
		/ATTACHING PARTS/		
	NAS561P4-10	. PIN	1	
		——*——		
	96-810022-607	. SWITCH & WIRE ASSY,ON-OFF TEST.	1	3
	35-380053-656	. . SWITCH ASSY,ON-OFF TEST	1	3
- 8	35-380053-11	. . . SWITCH.	1	3
		/ATTACHING PARTS/		
	15-124	. . . NUT,FACE.	1	
		——*——		
- 9	35-380052	. . . KNOB,SWITCH	1	4
	96-384050-7	. . . KNOB,SWITCH	1	5
- 10	96-324105	. PLACARD,LANDING GEAR SAFETY SYSTEM.	1	3
- 11	60-364012-601	. PRINTED CIRCUIT BOARD ASSY.	1	3
		/ATTACHING PARTS/		
	AN520-10R18	. SCREW	2	
	AN960-10	. WASHER.	4	
	MS20365-1032	. NUT	2	
		——*——		
	96-810022-31	. TUBE ASSY	1	3
- 12	96-810022-33	. . TUBE ASSY	2	3
- 13	96-810022-11	. . TEE ASSY.	1	3
- 14	96-810022-29	. . TUBE SPLICE	2	3
- 15	A8	. . CLAMP,HOSE.	4	3
- 16	96-810022-27	. . TUBE,SPLICE	1	3
- 17	A6	. . CLAMP,HOSE.	2	3
- 18	96-810022-25	. TUBE/STATIC SYSTEM TO PRESSURE SWITCH/. . . .	1	3
- 19	96-810022-39	. SUPPORT,PRESSURE SWITCH	1	3
	96-810022-41	. ANGLE,SUPPORT	2	3
- 20	90-380010-7	. SWITCH,PRESSURE/STATIC SYSTEM,.	1	3
		SUPERSEDES 35-380092-25/		
- 21	90-380010-5	. SWITCH,PRESSURE/PITOT SYSTEM, ...	1	3
		SUPERSEDES 35-380092-11/		
- 22	AN914-1D	. ELBOW/90 DEGREE/.	2	3
- 23	269P1/4-1/8	. ELBOW/TUBING TO PIPE THREAD/.	2	3
- 24	271P1/4-1/8	. TEE/TUBING TO PIPE THREAD	2	3
- 25	96-810022-17	. TUBE,SWITCH INTERCONNECT.	2	3
- 26	96-810022-21	. TUBE/PITOT SYSTEM TO PRESSURE SWITCH/	1	3
	MS35489-16S	. GROMMET	2	3

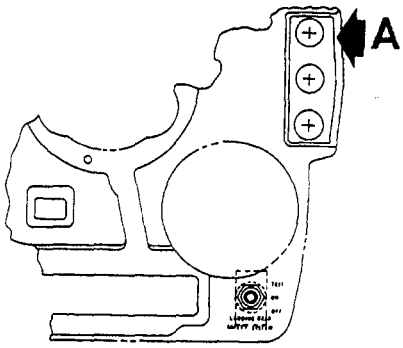

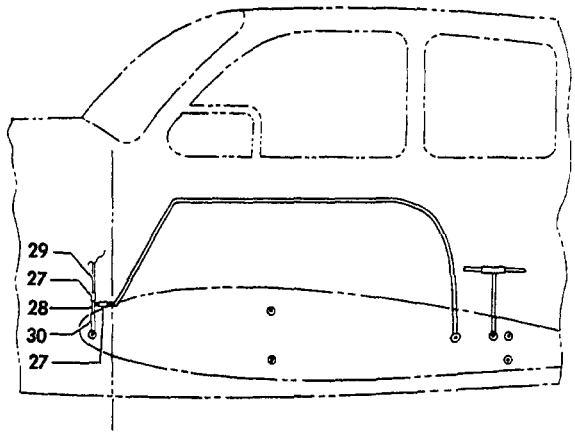

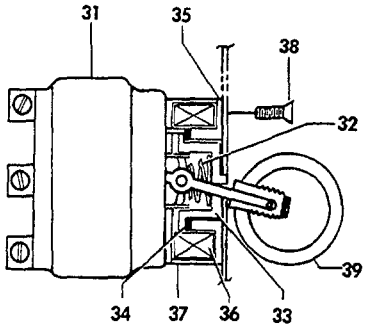

VIEW **A**

55-223-11

FIGURE 60-01.LANDING GEAR POSITION,SAFETY
AND WARNING/SHEET 2 OF 2 SHEETS/

ATA CODE & INDEX NO.	PART NO.	DESCRIPTION 1 2 3 4 5 6 7	UNITS PER ASSY	USABLE ON CODE
60-01 - 27	96-810022-27	. TUBE,SPLICE	2	3
		/ATTACHING PARTS/		
	A6	. CLAMP,HOSE	4	
		----*----		
- 28	96-810022-5	. TEE ASSY,PITOT AIR	1	3
- 29	96-810022-45	. TUBE ASSY,PITOT AIR	1	3
- 30	114693-2-00900	. TUBING,PITOT AIR	1	4
	106200H4-52	. TUBING,PITOT AIR	1	5
		/ATTACHING PARTS/		
	A6	. CLAMP,HOSE	2	
		----*----		
	96-324102-5	. COVER,CONSOLE	1	1
	96-324102-1	. COVER,CONSOLE	1	6
	96-324174-3	. COVER,CONSOLE	1	5
	60-364011	SWITCH ASSY,LANDING GEAR SAFETY	1	3
- 31	60-364011-15	. SWITCH	1	3
- 32	35-364171-3	. SPRING	1	3
- 33	60-364011-1	. LATCH,SOLENOID	1	3
- 34	105090D030-9F	. WASHER	1	3
- 35	60-364011-13	. CAP ASSY	1	3
	60-364011-3	. . CAP	1	3
	60-364011-17	. . BEARING ASSY,SLEEVE	1	3
- 36	35-380090	. COIL ASSY	1	3
- 37	60-364011-11	. HOUSING ASSY	1	3
	60-364011-9	. . HOUSING	1	3
	MS9048-065	. . PIN,ROLL	1	3
- 38	AN507-4R4	. SCREW	2	3
- 39	35-380087-1	. LEVER,LANDING GEAR SWITCH	1	3
		/ATTACHING PARTS/		
	AN565D8H2	. SCREW,SET	1	
		----*----		
	AN565D4H6	. SCREW,SET	1	3

CODES OF EFFECTIVITY

1 TC-1024 THRU TC-1607
2 TC-350 AND TE-252 THRU TE-942 EXCEPT TE-938
3 TC-1024 THRU TC-1607 TC-350 AND TE-252 THRU TE-942 EXCEPT TE-938
4 TC-1024 THRU TC-1607 TC-350 AND TE-252 THRU TE-767
5 TE-768 THRU TE-942 EXCEPT TE-938
6 TE-252 THRU TE-767

"END"

CHAPTER 33

LIGHTS

LIST OF PAGES & TABLE OF CONTENTS
FOR
CHAPTER 33-00-00 LIGHTS

CHAP/SUB-SECT & UNIT	PAGE NO.	EFFECTIVE DATE	TABLE OF CONTENTS
33-00-00	1	04/05/85	LIST OF PAGES & TABLE OF CONTENTS
33-00-00	2	04/05/85	
33-10-01	1	03/10/78	OPTIONAL INSTRUMENT PANEL LIGHTS
33-10-01	2	03/10/78	
33-10-01	3	03/10/78	
33-11-10	1	03/10/78	CABIN DOOR COURTESY LIGHT & INTERIOR LAMPS
33-11-10	2	03/10/78	TC-1043 THRU TC-1607
33-11-10	3	03/10/78	TE-452 THRU TE-942 EXCEPT TE-938
33-30-01	1	03/10/78	NOSE BAGGAGE COMPARTMENT LIGHTS
33-30-01	2	03/10/78	TE-452 THRU TE-942 EXCEPT TE-938
33-30-01	3	03/10/78	
33-40-01	1	03/10/78	NOSE GEAR TAXI AND LANDING LIGHT
33-40-01	2	03/10/78	TC-1 THRU TC-1607,TE-1 THRU TE-300
33-40-01	3	03/10/78	
33-40-02	1	04/05/85	NOSE CONE TAXI LIGHT/REFERENCE/
33-40-03	1	03/10/78	NOSE GEAR TAXI LIGHT
33-40-03	2	03/10/78	TE-301 THRU TE-767
33-40-03	3	03/10/78	
33-40-05	1	03/10/78	NOSE GEAR TAXI LIGHT
33-40-05	2	03/10/78	TE-768 THRU TE-834
33-40-05	3	03/10/78	
33-40-07	1	03/10/78	NOSE GEAR TAXI LIGHT
33-40-07	2	03/10/78	TE-835 THRU TE-937,TE-939 THRU TE-942
33-40-07	3	03/10/78	
33-40-08	1	03/10/78	WING NAVIGATION LIGHTS
33-40-08	2	03/10/78	TC-1 THRU TC-1607,TE-1 THRU TE-767
33-40-08	3	03/10/78	
33-40-09	1	04/05/85	WING LANDING LIGHT/REFERENCE/
33-44-01	1	03/10/78	LOWER STROBE LIGHT
33-44-01	2	03/10/78	TC-1261 THRU TC-1607 AND TE-730 THRU TE-862
33-44-01	3	03/10/78	
33-44-10	1	03/10/78	STROBE LIGHTS
33-44-10	2	03/10/78	TC-1299 THRU TC-1607
33-44-10	3	03/10/78	TE-768 THRU TE-942 EXCEPT TE-938
33-44-10	4	03/10/78	
33-44-10	5	03/10/78	
33-45-01	1	03/10/78	UPPER ROTATING BEACON
33-45-01	2	03/10/78	
33-45-01	3	03/10/78	
33-46-01	1	04/05/85	LOWER ROTATING BEACON
33-46-01	2	03/10/78	TC-1403 THRU TC-1607
33-46-01	3	04/05/85	TE-1 THRU TE-767

LIST OF PAGES & TABLE OF CONTENTS
FOR
CHAPTER 33-00-00 LIGHTS

CHAP/SUB-SECT & UNIT	PAGE NO.	EFFECTIVE DATE	TABLE OF CONTENTS
33-47-01	1	03/10/78	UPPER OSCILLATING BEACON
33-47-01	2	03/10/78	TE-768 THRU TE-942 EXCEPT TE-938
33-47-01	3	04/05/85	
33-48-01	1	03/10/78	WING ICE LIGHT
33-48-01	2	03/10/78	TC-191 THRU TC-1607
33-48-01	3	03/10/78	TE-1 THRU TE-942 EXCEPT TE-938
33-49-01	1	03/10/78	LOWER OSCILLATING BEACON
33-49-01	2	03/10/78	TE-768 THRU TE-942 EXCEPT TE-938
33-49-01	3	03/10/78	

33-10-01
OPTIONAL INSTRUMENT PANEL LIGHTS

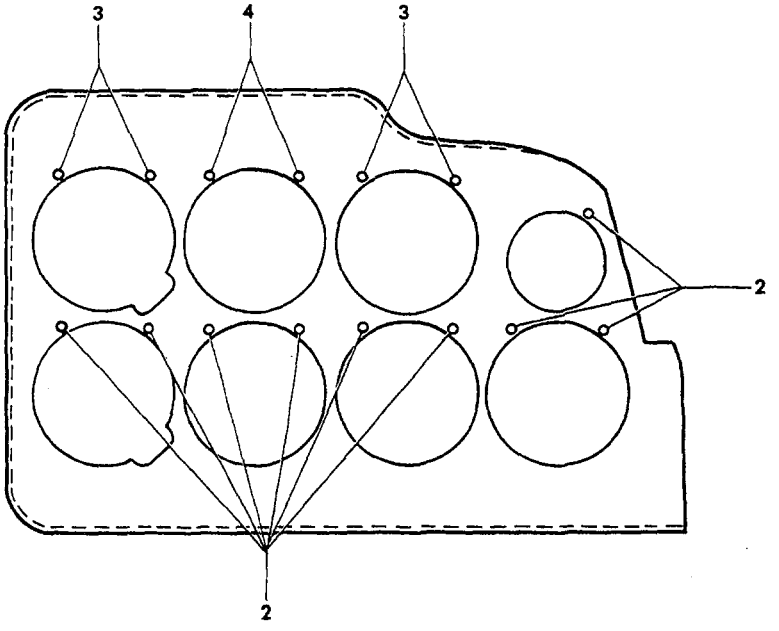

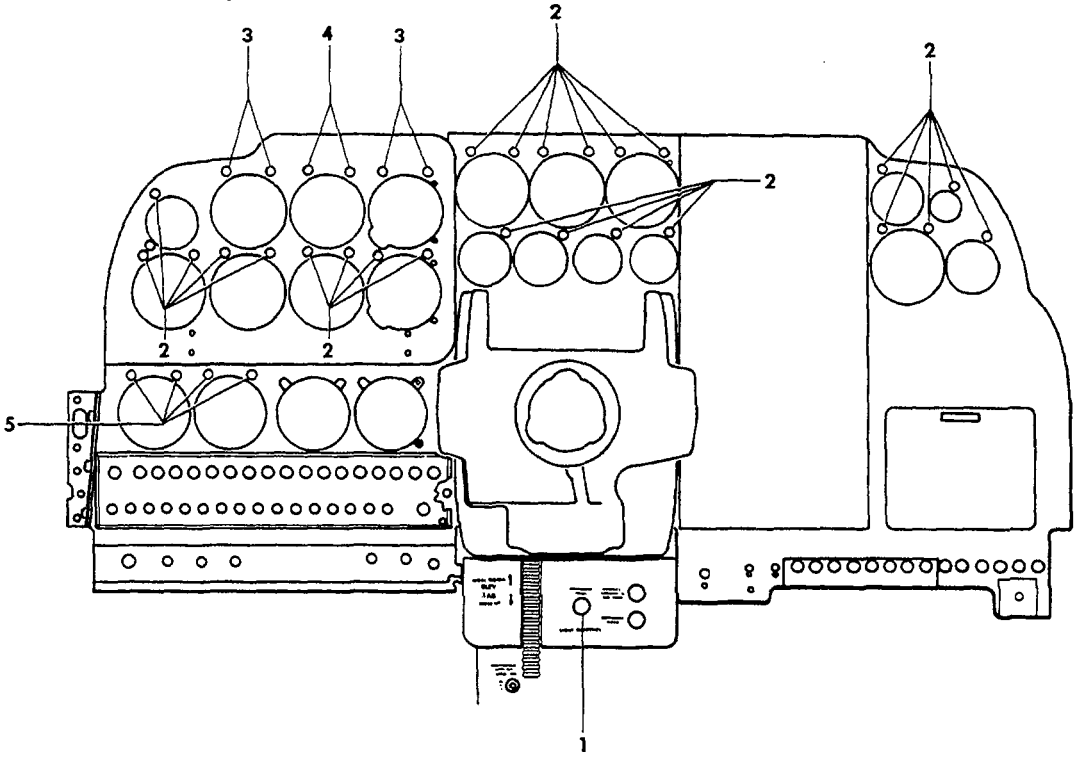

55-351-4

FIGURE 10-01.OPTIONAL INSTRUMENT PANEL LIGHTS

ATA CODE & INDEX NO.	PART NO.	DESCRIPTION 1 2 3 4 5 6 7	UNITS PER ASSY	USABLE ON CODE
10-01	96-364015	LIGHT INSTL,INSTRUMENT.	NP	1
	96-364015-1	LIGHT INSTL,INSTRUMENT/DUAL/.	NP	1
	96-364015-3	LIGHT INSTL,INSTRUMENT.	NP	2
	96-364015-5	LIGHT INSTL,INSTRUMENT/DUAL/.	NP	2
	96-364054-3	LIGHT INSTL,INSTRUMENT.	NP	3
	96-364054-7	LIGHT INSTL,INSTRUMENT/DUAL	NP	4
	96-364089-1	LIGHT INSTL,INSTRUMENT.	NP	5
	96-364089-3	LIGHT INSTL,INSTRUMENT.	NP	5
- 1	C316-351	. RHEOSTAT.	1	6
	90-1-2	. KNOB.	1	6
- 2	A8970B1-327	. LIGHT ASSY,INSTRUMENT POST.	22	1
	A8970B2-327	. LIGHT ASSY,INSTRUMENT POST.	22	8
		/30 REQUIRED FOR DUAL INST PANEL/		
- 3	A8970B2-327	. LIGHT ASSY,INSTRUMENT POST.	4	7
		/8 REQUIRED FOR DUAL INST PANEL/		
- 4	A8975B1-327	. LIGHT ASSY,INSTRUMENT POST.	2	1
	A8970B2-327	. LIGHT ASSY,INSTRUMENT POST.	2	8
		/4 REQUIRED FOR DUAL INST PANEL/		
- 5	A8970B2-375	. LIGHT ASSY,INSTRUMENT POST.	2	8
	327	. . LAMP,INSTRUMENT POST LIGHT.	1	7

CODES OF EFFECTIVITY

1	TC-191 THRU TC-1042 TE-1 THRU TE-451	2	TC-1043 THRU TC-1157
3	TC-1157 THRU TC-1607 TE-452 THRU TE-840	4	TE-452 THRU TE-840
5	TE-841 THRU TE-942 EXCEPT TE-938	6	TC-191 THRU TC-1042 TE-I THRU TE-767
7	TC-191 THRU TC-1607 TE-1 THRU TE-942 EXCEPT TE-938	8	TC-1043 THRU TC-1607 TE-452 THRU TE-942 EXCEPT TE-938

"END"

33-11-10
CABIN DOOR COURTESY LIGHT & INTERIOR LAMPS
TC-1043 THRU TC-1607
TE-452 THRU TE-942 EXCEPT TE-938

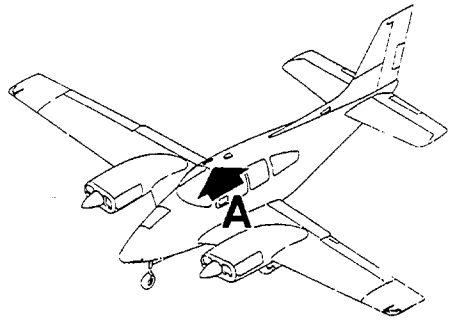

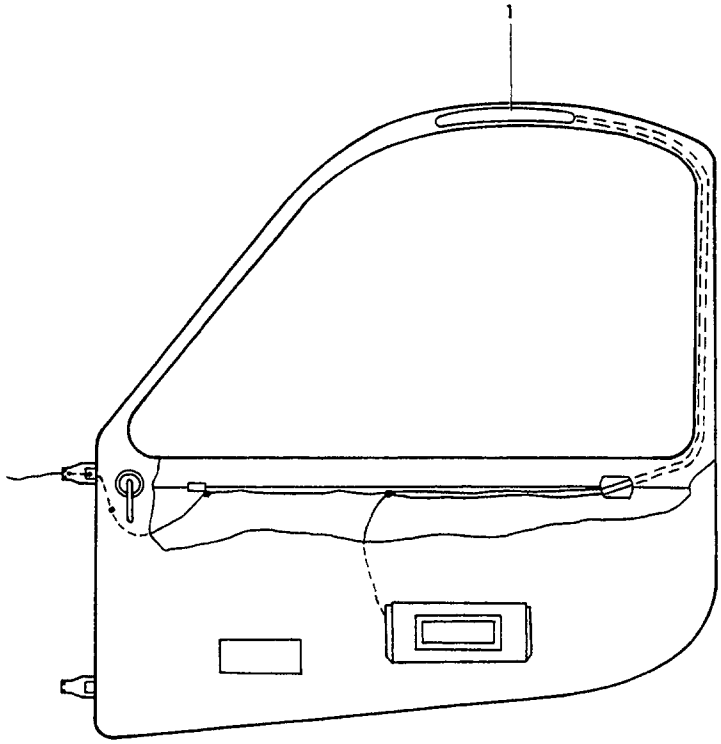

VIEW A

55-354-31

FIGURE 11-10.CABIN DOOR COURTESY LIGHT & INTERIOR LAMPS

ATA CODE & INDEX NO.	PART NO.	DESCRIPTION 1 2 3 4 5 6 7	UNITS PER ASSY	USABLE ON CODE
11-10	36-364019-1	COURTESY LIGHT INSTL,CABIN DOOR	NP	1
- 1	30-0502-5	. LIGHT ASSY,THRESHOLD.	1	1
	31-1705-3	. . LENS/UNBREAKABLE/	1	1
	31-1704-1	. . HOUSING	1	1
	424	. . BOOT.	1	1
	361S1	. . TERMINAL.	1	1
	307	. BULB,THRESHOLD LIGHT.	1	1
	SW442	. SWITCH,THRESHOLD LIGHT.	1	1
	1864	LAMP,CABIN LIGHT.	2	2
	1495	LAMP,3RD & 4TH SEAT READING	2	2
	313	LAMP,GLARESHIELD.	12	2
	1829	LAMP,GLARESHIELD.	4	3

CODES OF EFFECTIVITY

1 TC-1403 THRU TC-1607
TE-452 THRU TE-942
EXCEPT TE-938

2 TC-1403 THRU TC-1607
TE-768 THRU TE-942
EXCEPT TE-938

3 TE-1043 THRU TC-1402
TE-452 THRU TE-767

"END"

33-30-01
NOSE BAGGAGE COMPARTMENT LIGHTS
TE-452 THRU TE-942 EXCEPT TE-938

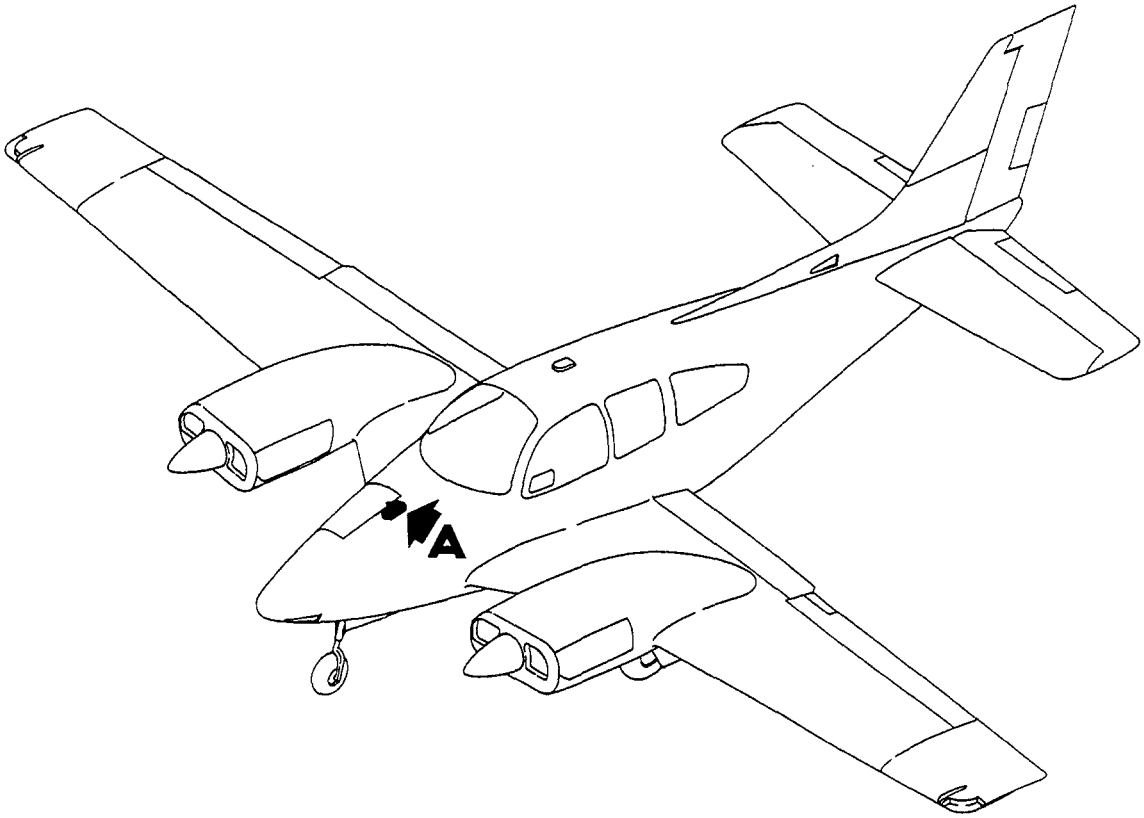

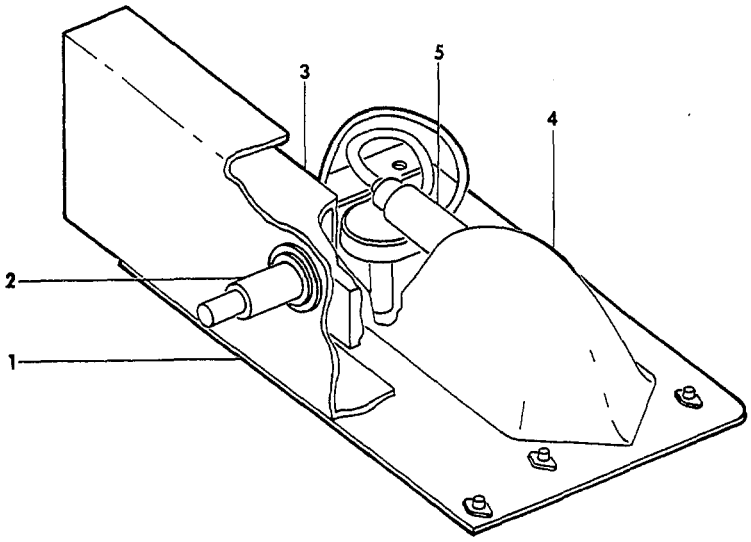

55-351-1

VIEW A

FIGURE 30-01.NOSE BAGGAGE COMPARTMENT LIGHTS

ATA CODE & INDEX NO.	PART NO.	DESCRIPTION 1 2 3 4 5 6 7	UNITS PER ASSY	USABLE ON CODE
30-01	96-364058	LIGHT INSTL,NOSE BAGGAGE.	NP	1
- 1	96-364058-1	. BRACKET,LIGHT	1	1
- 2	AN3168-2	. ACTUATOR.	1	1
- 3	AN3210-1	. SWITCH.	1	1
- 4	B3555A307	. LIGHT ASSY.	1	1
	AN515-6R6	. SCREW	1	
	AN960-6	. WASHER.	4	
	MS20365-632	. NUT	4	
- 5	307	. . LAMP,GE	1	1

CODES OF EFFECTIVITY

1 TE-452 THRU TE-942
EXCEPT TE-938

"END"

33-40-01
NOSE GEAR TAXI AND LANDING LIGHT
TC-1 THRU TC-1607,TE-1 THRU TE-300

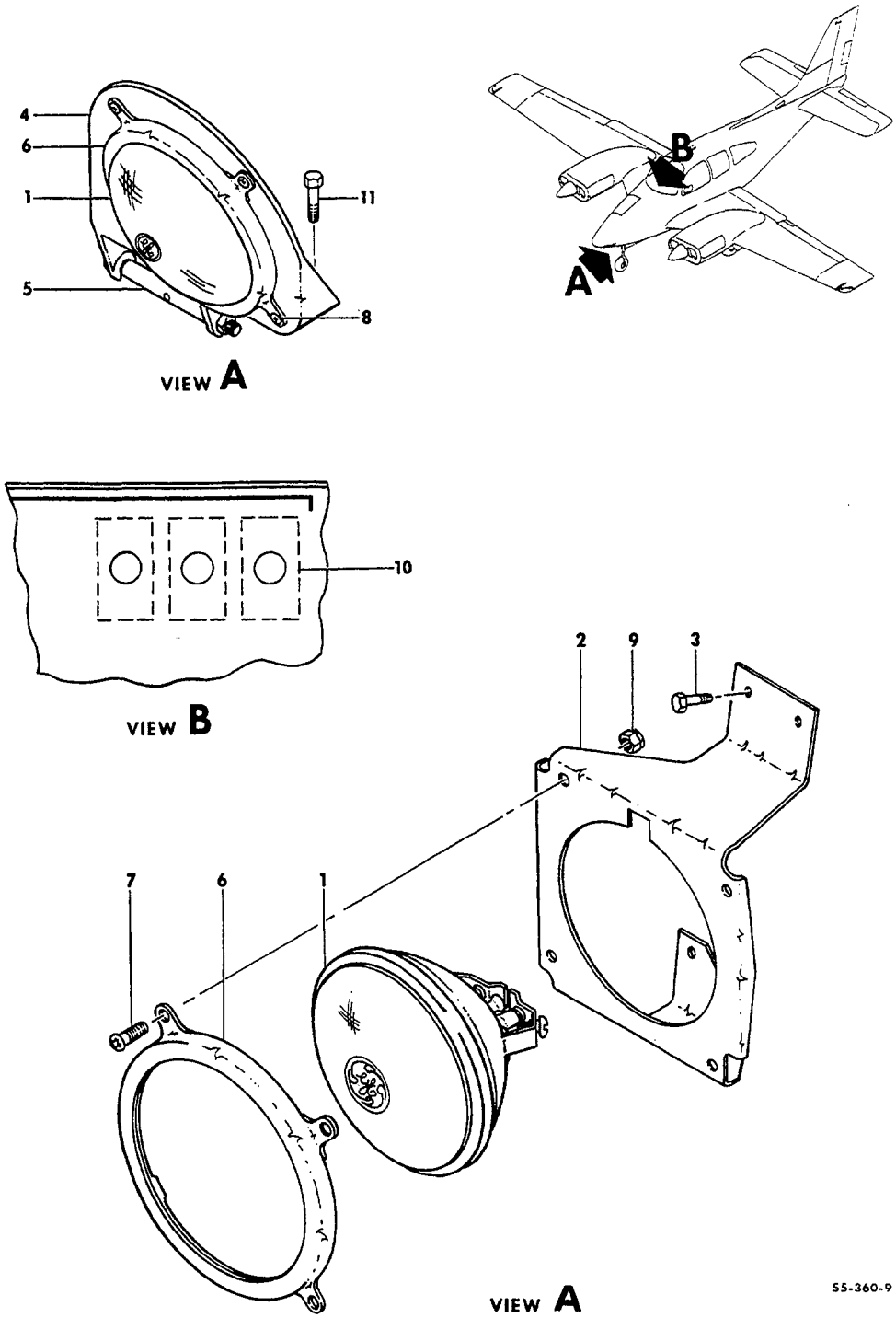

FIGURE 40-01. NOSE GEAR TAXI AND LANDING LIGHT

ATA CODE & INDEX NO.	PART NO.	DESCRIPTION 1 2 3 4 5 6 7	UNITS PER ASSY	USABLE ON CODE
40-01	95-364032	LIGHT INSTL,LANDING	NP	2
	96-364012	LIGHT INSTL,TAXI	NP	3
	35-364258-1	BRACKET INSTL,TAXI LIGHT/STEERABLE/	NP	4
- 1	4626	. BULB	1	1
- 2	95-364032-1	. BRACKET,LANDING LIGHT	1	2
	96-364012-3	. BRACKET,TAXI LIGHT	1	3
		/ATTACHING PARTS/		
- 3	AN3-A	. BOLT	3	
	MS20365-1032	. NUT	3	
		----*----		
- 4	35-364259-1	. BRACKET,TAXI LIGHT	1	4
		/ATTACHING PARTS/		
- 5	35-825200	. PIN,UPPER TORQUE KNEE	1	4
	MS20365-428	. NUT	2	4
		----*----		
- 6	96-364012-5	. CLAMP	1	1
	45-115018	. CLAMP	1	2
		/ATTACHING PARTS/		
- 7	AN515-8R	. SCREW	4	
- 8	AN515-8R6	. SCREW	4	4
- 9	MS20365-832	. NUT	4	
	MS20365-832	. NUT	4	4
		----*----		
	112416-01316	. EXTRUSION,RUBBER SEAL	1	3
	112416-01124	. EXTRUSION,RUBBER SEAL	1	4
- 10	113-210-102	. CIRCUIT BREAKER	1	2
	AN960-816	. WASHER	1	4
		/ATTACHING PARTS/		
- 11	AN3-10	. BOLT	1	4
	AN960-10	. WASHER	AR	4
	MS20365-1032	. NUT	1	4
		----*----		

CODES OF EFFECTIVITY

1 TE-1 THRU TE-300
2 TC-1 THRU TC-1607
3 TE-1 THRU TE-300
TC-1 THRU TC-1607
4 TC-1299 THRU TC-1670

"END"

33-40-02
NOSE CONE TAXI LIGHT/REFERENCE/
TC-1 THRU TC-501
SEE CHAPTER 53-50-01 FOR BREAKDOWN

"END"

33-40-03
NOSE GEAR TAXI LIGHT
TE-301 THRU TE-767

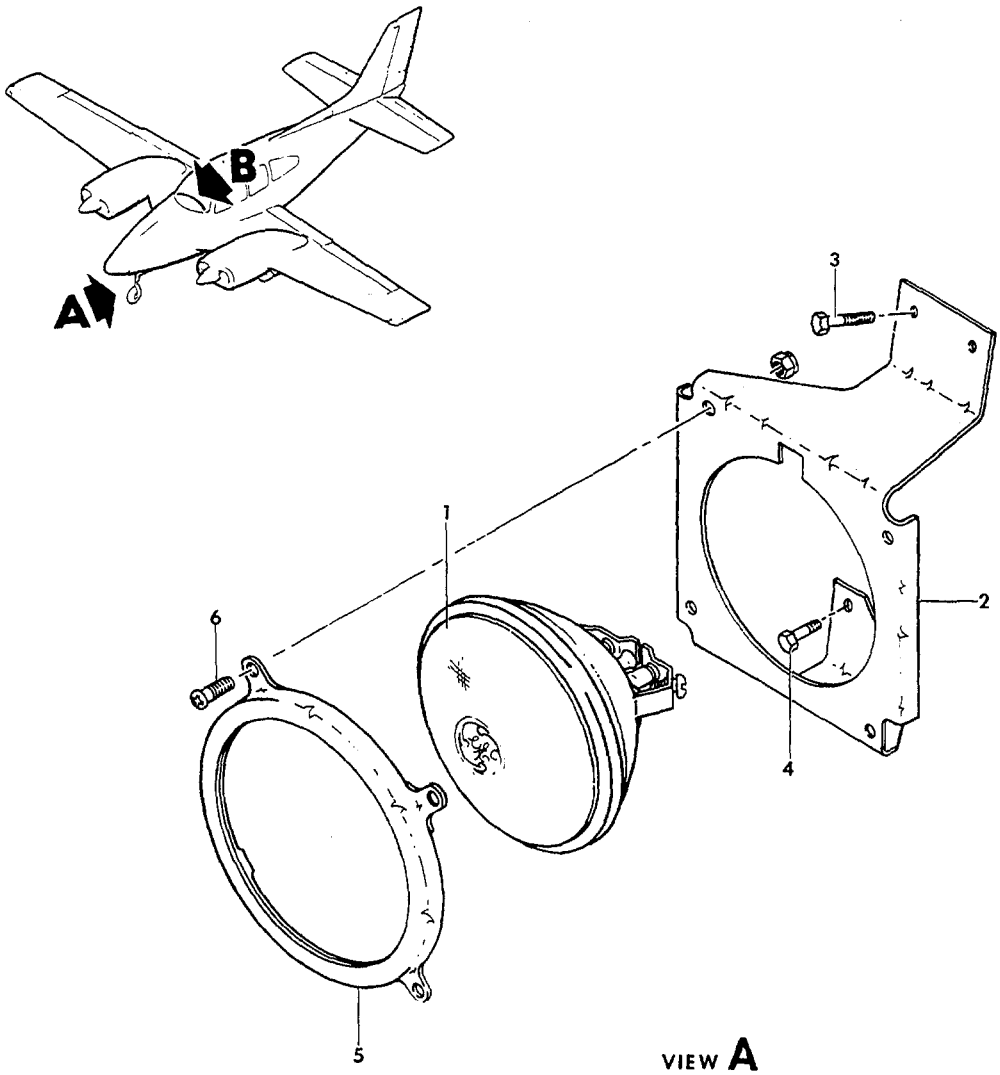

VIEW A

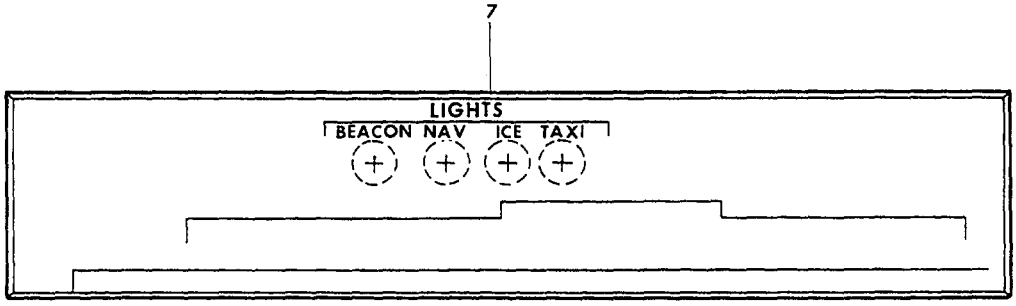

VIEW B

55-360-10

FIGURE 40-03.NOSE GEAR TAXI LIGHT

ATA CODE & INDEX NO.	PART NO.	DESCRIPTION 1 2 3 4 5 6 7	UNITS PER ASSY	USABLE ON CODE
40-03	96-364045	LIGHT INSTL,TAXI.	NP	1
- 1	4626	. BULB.	1	1
- 2	96-364045-1	. BRACKET,TAXI LIGHT.	1	1
		/ATTACHING PARTS/		
- 3	AN3-22A	. BOLT.	2	
	MS20365-1032	. NUT	2	
	AN960-10	. WASHER.	4	
- 4	AN3-11A	. BOLT.	1	
	MS20365-1032	. NUT	1	
	100696-S-ZD015	. SPACER.	1	
		----*----		
- 5	96-364012-5	. CLAMP	1	1
		/ATTACHING PARTS/		
- 6	AN515-8R	. SCREW	1	
	MS20365-832	. NUT	4	
		----*----		
	112416-01316	. EXTRUSION,RUBBER SEAL	1	1
- 7	113-210-102	. CIRCUIT BREAKER	1	1

CODES OF EFFECTIVITY

1 TE-301 THRU TE-767

"END"

33-40-05
NOSE GEAR TAXI LIGHT
TE-768 THRU TE-834

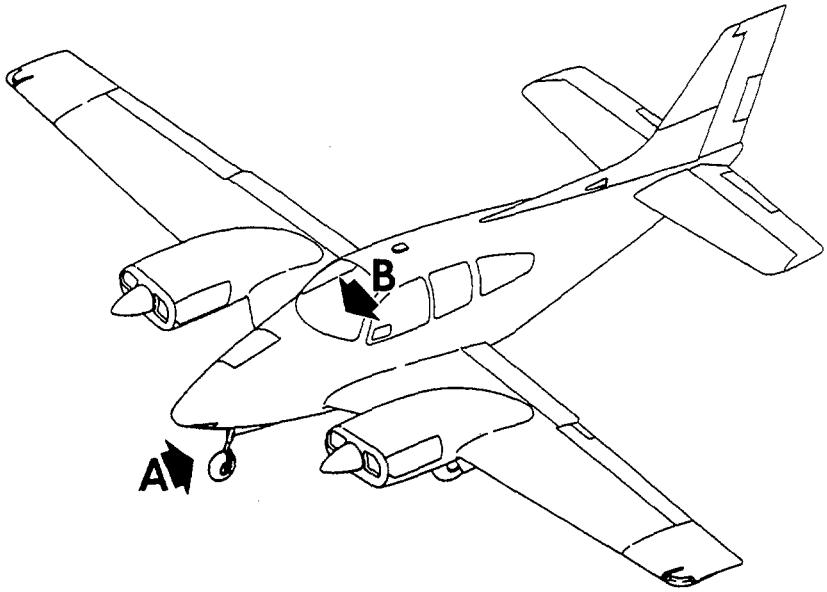

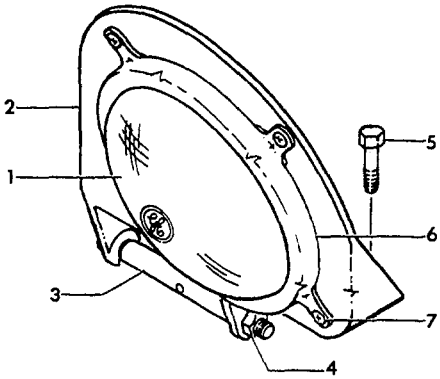

VIEW A

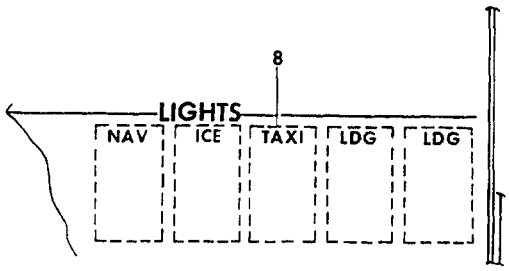

VIEW B

55-360-11

FIGURE 40-05.NOSE GEAR TAXI LIGHT

ATA CODE & INDEX NO.	PART NO.	DESCRIPTION 1 2 3 4 5 6 7	UNITS PER ASSY	USABLE ON CODE
40-05	58-360022-1	LIGHT INSTL,TAXI.	NP	1
- 1	4626	. BULB.	1	1
- 2	58-360024-1	. BRACKET,TAXI LIGHT.	1	1
	C84220-1	. BRACKET,TAXI LIGHT.	1	2
		/ATTACHING PARTS/		
- 3	35-825200	. PIN,UPPER TORQUE KNEE	1	1
	58-820010	. PIN,UPPER TORQUE KNEE	1	2
- 4	MS20365-428	. NUT	2	
- 5	MS24694-S58	. BOLT.	1	
	AN960-10L	. WASHER/UNDER BOLT HEAD/	2	
	AN960-10	. WASHER/ALTERNATE AN960-10L/	AR	
	AN960-10L	. WASHER/BETWEEN NUT & SHIMMY DAMPER/	1	
	MS20365-1032	. NUT	1	
		----*----		
- 6	96-364012-5	. CLAMP	1	1
		/ATTACHING PARTS/		
- 7	MS27039-0806	. SCREW	4	
	MS20365-832	. NUT	4	
		----*----		
	112416-01124	. EXTRUSION,RUBBER SEAL	1	1
- 8	35-380132-43	. CIRCUIT BREAKER	1	1

CODES OF EFFECTIVITY

1 TE-768 THRU TE-834 2 TE-806 THRU TE-834

"END"

33-40-07
NOSE GEAR TAXI LIGHT
TE-835 THRU TE-937,TE-939 THRU TE-942

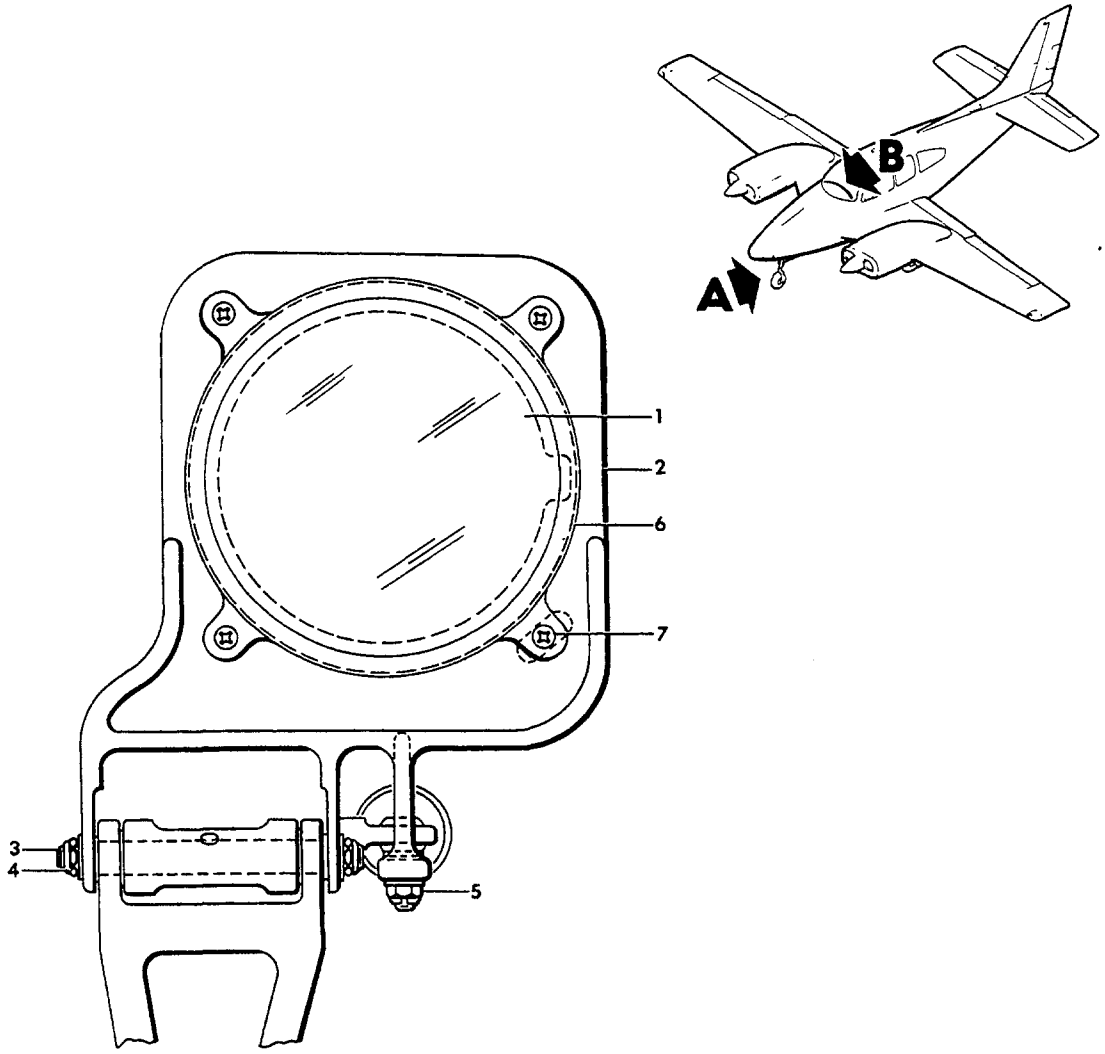

VIEW A

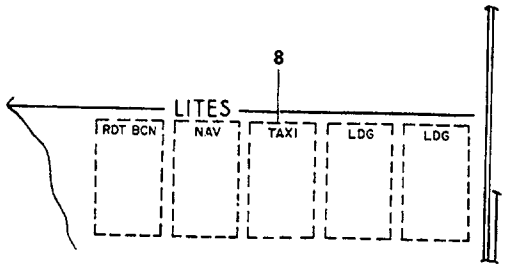

VIEW B

55-360-12

FIGURE 40-07.NOSE GEAR TAXI LIGHT

ATA CODE & INDEX NO.	PART NO.	DESCRIPTION 1 2 3 4 5 6 7	UNITS PER ASSY	USABLE ON CODE
40-07	58-360026-1	LIGHT INSTL,NOSE GEAR TAXI.	NP	1
- 1	4626	. BULB.	1	1
- 2	58-360027	. BRACKET,TAXI LIGHT.	1	1
		/ATTACHING PARTS/		
- 3	58-820010	. PIN,UPPER TORQUE KNEE	1	
	AN960-416L	. WASHER.	4	
- 4	MS20365-428	. NUT	2	
- 5	AN3-11	. BOLT.	1	
	AN310-3	. NUT	1	
	AN960-10	. WASHER.	1	
	AN960-10L	. WASHER.	3	
	MS24665-132	. PIN,COTTER.	1	
		----*----		
- 6	96-364012-5	. CLAMP	1	1
		/ATTACHING PARTS/		
- 7	MS27039-0806	. SCREW	4	
	MS20365-832	. NUT	4	
		----*----		
	112416-01124	. EXTRUSION,RUBBER SEAL	1	
- 8	35-380132-43	. CIRCUIT BREAKER	1	

CODES OF EFFECTIVITY

1 TE-835 THRU TE-937,
TE-939 THRU TE-942

"END"

33-40-08
WING NAVIGATION LIGHTS
TC-1 THRU TC-1607,TE-1 THRU TE-767

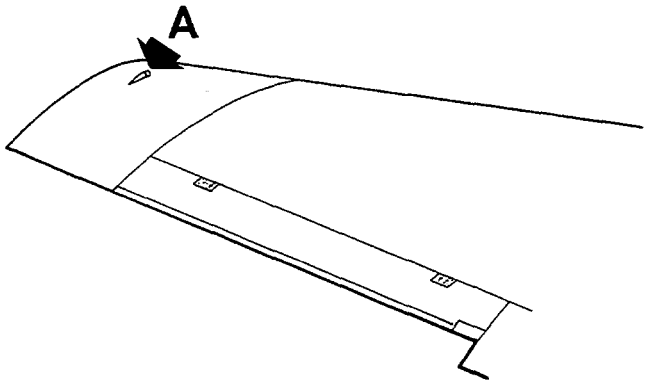

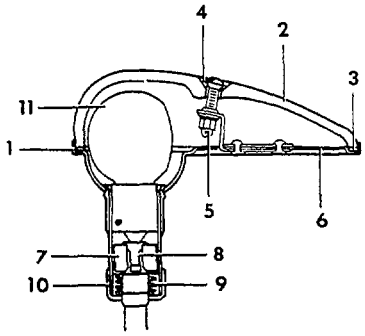

VIEW A

55-31-11

FIGURE 40-08.WING NAVIGATION LIGHTS

ATA CODE & INDEX NO.	PART NO.	DESCRIPTION 1 2 3 4 5 6 7	UNITS PER ASSY	USABLE ON CODE
40-08	95-360000-601	WIRE ASSY,WING TIP LIGHT LH	1	1
	96-360000-601	WIRE ASSY,WING TIP LIGHT LH	1	1
	96-360011-678	WIRE ASSY,WING TIP LIGHT LH	1	1
	96-360015-678	WIRE ASSY,WING TIP LIGHT LH	1	1
	95-360000-602	WIRE ASSY,WING TIP LIGHT RH	1	1
	96-360000-602	WIRE ASSY,WING TIP LIGHT RH	1	1
	96-360011-679	WIRE ASSY,WING TIP LIGHT RH	1	1
	96-360015-679	WIRE ASSY,WING TIP LIGHT RH	1	1
	B3307-4	. LAMP ASSY,LH LOWER/RED/	1	1
- 1	B3307-3	. LAMP ASSY,LH UPPER/RED/	1	1
	B3307-1	. LAMP ASSY,RH UPPER/GREEN/	1	1
	B3307-2	. LAMP ASSY,RH LOWER/GREEN/	1	1
- 2	A3258-3	. . LENS,LH UPPER/RED/	1	1
	A3258-4	. . LENS,LH LOWER/RED/	1	1
	A3258-1	. . LENS,RH UPPER/GREEN/	1	1
	A3258-2	. . LENS,RH LOWER/GREEN/	1	1
- 3	A2134	. . GASKET,LENS	1	1
- 4	A3649	. . GASKET,LENS ATTACHING	1	1
- 5	6-32 X 3/4	. . SCREW,LENS ATTACHING	1	1
- 6	A3442-2	. . BASE SUBASSY,POSITION LIGHT	1	1
- 7	A2353	. . GUIDE,TERMINAL	1	1
- 8	A2351	. . TERMINAL,CRIMP TYPE	1	1
- 9	A1783	. . SPRING,LAMP SOCKET	1	1
- 10	A1111	. . NUT	1	1
- 11	1524	. . BULB	1	1

CODES OF EFFECTIVITY

1 TC-1 THRU TC-1607
TE-1 THRU TE-767

"END"

33-40-09
WING LANDING LIGHT/REFERENCE/
FOR BREAKDOWN SEE CHAPTER 57-20-01

33-44-01
LOWER STROBE LIGHT
TC-1261 THRU TC-1607 AND TE-730 THRU TE-862

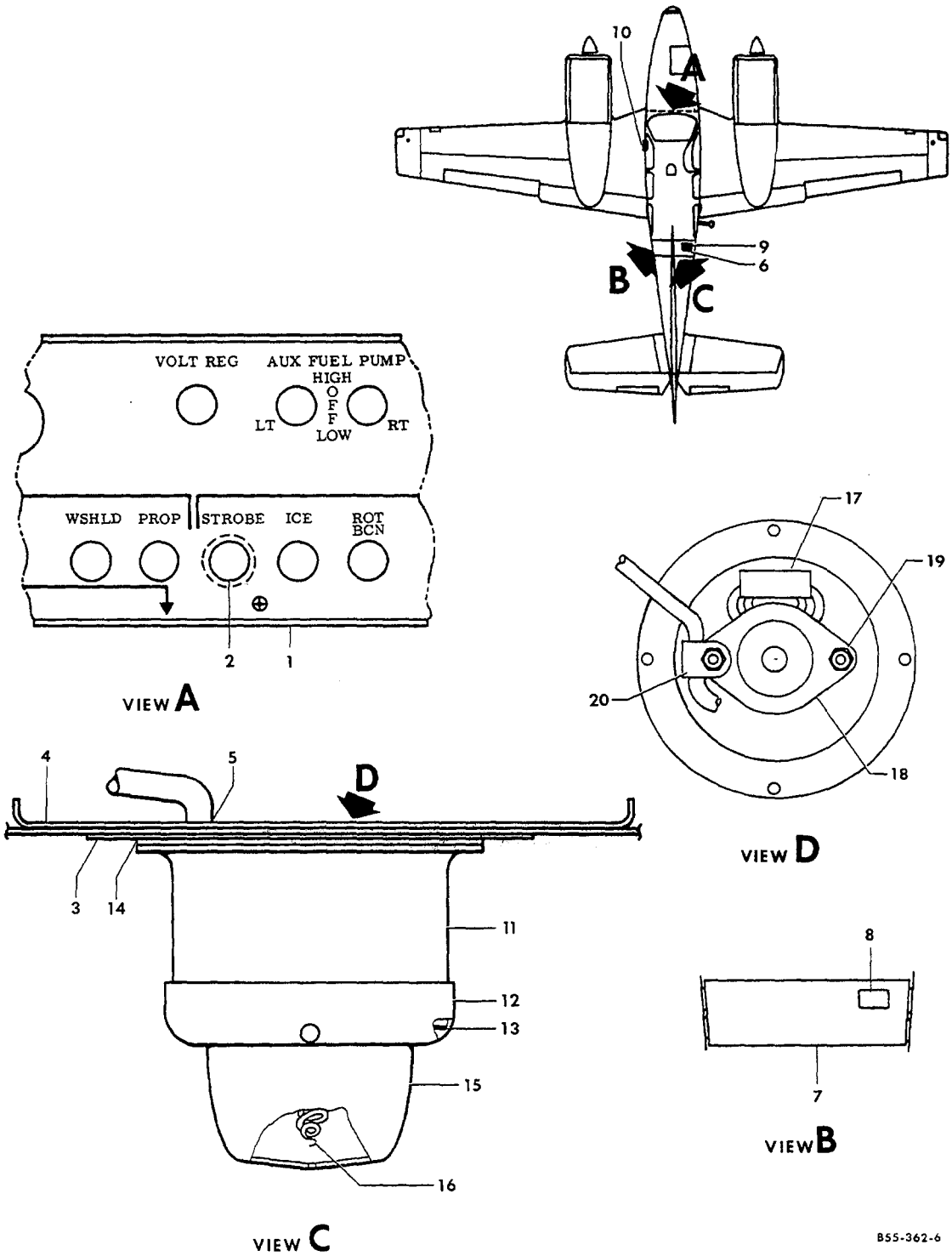

FIGURE 44-01. LOWER STROBE LIGHT

ATA CODE & INDEX NO.	PART NO.	DESCRIPTION 1 2 3 4 5 6 7	UNITS PER ASSY	USABLE ON CODE
44-01	96-364086	STROBE LIGHT INSTL.	NP	1
	96-364086-3	STROBE LIGHT INSTL.	NP	2
- 1	96-364086-1	. PANEL	1	1
	35-380052	. KNOB.	1	1
	96-384050-1	. KNOB.	1	2
- 2	35-380053-3	. SWITCH.	1	1
- 3	35-364268-1	. ADAPTER ASSY.	1	3
		/ATTACHING PARTS/		
	AN515-6R8	. SCREW	5	
		----*----		
- 4	95-364027-21	. REINFORCEMENT	1	3
- 5	MS35489-65	. GROMMET	1	3
- 6	1100	. POWER SUPPLY,AIRGUARD,LOWER STROBE LIGHT.	1	3
	AN366F832	. NUTPLATE.	4	3
		/ATTACHING PARTS/		
	AN525-8-7	. SCREW	4	
		----*----		
- 7	58-360025-15	. FLOORBOARD.	1	3
- 8	58-360025-13	. COVER,FLOORBOARD/POWER SUPPLY ACCESS/	1	3
		/ATTACHING PARTS/		
	NAS387-832P8	. SCREW	4	
	NAS391-8P	. WASHER.	4	
	NAS1329A08K75	. NUT	4	
		----*----		
- 9	96-364086-5	. BRACKET ASSY.	1	3
	96-364086-11	. . BRACKET	1	3
	NAS1031-AD8	. . NUTPLATE.	4	3
		/ATTACHING PARTS/		
	AN525-8R7	. . SCREW	4	
	AN936A8B	. . WASHER.	4	
		----*----		
- 10	96-364087	. PLACARD	1	3
	NAS384-6-12P	. SCREW	2	3
	1425 1M	. LAMP ASSY	1	3
		/ATTACHING PARTS/		
	AN515-6R8	. SCREW	4	
		----*----		
- 11	SR0335	. . CASE.	1	3
- 12	SR0336	. . COVER	1	3
- 13	SR0338	. . GASKET.	1	3
- 14	SR0337	. . GASKET.	1	3
- 15	4701	. . LENS,CLEAR,SAE 53	1	3
- 16	1014	. . LAMP.	1	3
- 17	ATC-7	. . COIL.	1	3
- 18	78RS8	. . SOCKET,FEMALE	1	3
- 19	8507	. . SPACER.	2	3
- 20	1/4 34378C	. . CLAMP,NYLON	1	3
		/ATTACHING PARTS/		
	632X1 1/2	. . SCREW	2	
	632	. . NUT,LOCK.	2	
	N06	. . WASHER.	1	
		----*----		

CODES OF EFFECTIVITY

1 TC-1261 THRU TC-1607 2 TE-730 THRU TE-862
3 TC-1261 THRU TC-1607
& TE-730 THRU TE-862

"END"

33-44-10
STROBE LIGHTS
TC-1299 THRU TC-1607
TE-768 THRU TE-942 EXCEPT TE-938

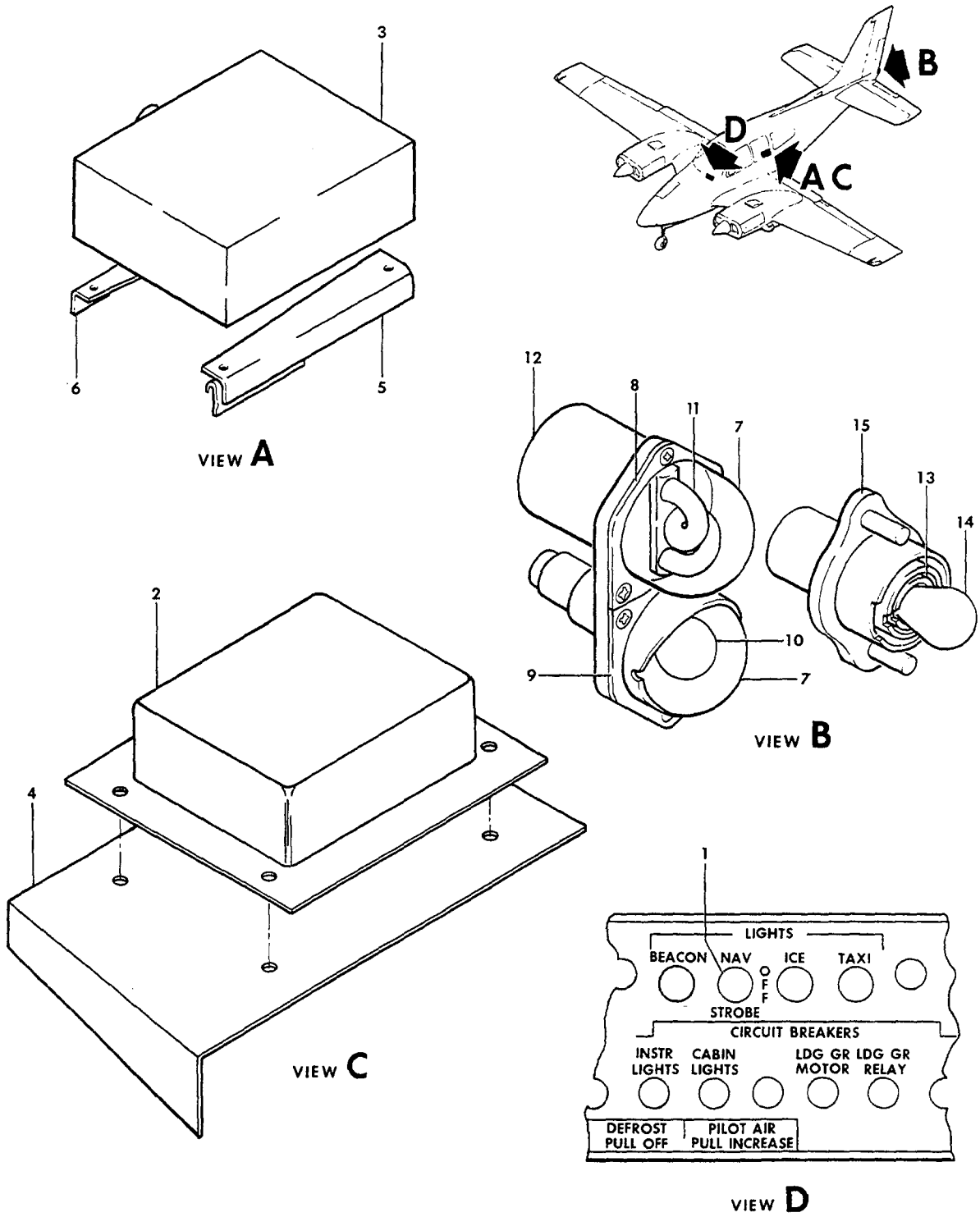

FIGURE 44-10. STROBE LIGHTS
/SHEET 1 OF 2 SHEETS/

ATA CODE & INDEX NO.	PART NO.	DESCRIPTION 1 2 3 4 5 6 7	UNITS PER ASSY	USABLE ON CODE
44-10	96-360024-1	LIGHT INSTL,STROBE.	NP	1
	96-360024-3	LIGHT INSTL,STROBE.	NP	1
	58-360025-1	LIGHT INSTL,STROBE.	NP	2
	58-360025-5	LIGHT INSTL,STROBE.	NP	2
	58-360028-3	LIGHT INSTL,STROBE.	NP	3
	58-360028-5	LIGHT INSTL,STROBE.	NP	4
	58-360028-13	LIGHT INSTL,STROBE.	NP	5
	58-360028-23	LIGHT INSTL,STROBE.	NP	6
- 1	35-380053-3	. SWITCH,STROBE LIGHT	1	7
	35-380052	. KNOB,STROBE LIGHT SWITCH.	1	7
	35-380132-43	. SWITCH,STROBE LIGHT	1	8
- 2	60-2038	. POWER SUPPLY/HOSKINS/	1	9
- 3	60-1750-3	. POWER SUPPLY/GRIMES/.	1	10
		/ATTACHING PARTS/		
	NAS387-832P8	. SCREW	4	1
	AN520-10R10	. SCREW	4	2
	AN3-4A	. BOLT.	4	10
	NAS931-8P	. WASHER.	4	1
	AN960-10	. WASHER.	4	10
	NAS1329A08K75	. NUT/RIVNUT TYPE/.	4	1
	NAS1329S3K80	. NUT/RIVNUT TYPE/.	4	2
	SL213-3-1	. NUT/CLIPNUT TYPE/	4	11
		----*----		
	61-2008	. . MODULE,POWER SUPPLY	3	9
	62-2038	. . TIMER	1	9
- 4	58-360025-9	. BRACKET ASSY,STROBE LIGHT POWER SUPPLY. . . .	1	9
		/ATTACHING PARTS/		
	MS27039-1-06	. SCREW	4	
	AN960-10	. WASHER.	4	
	MS20365-1032	. NUT	4	
		----*----		
- 5	58-360028-7	. BRACKET,STROBE LIGHT POWER SUPPLY LH.	1	11
- 6	58-360028-9	. BRACKET,STROBE LIGHT POWER SUPPLY RH.	1	11
		/ATTACHING PARTS/		
	AN3-5A	. BOLT.	4	
	AN960-10	. WASHER.	4	
	SL213-3-1	. CLIPNUT	4	
		----*----		
	58-360025-15	. FLOORBOARD/STA 170.0 TO 190.0/.	1	10
	58-360025-13	. COVER,STROBE LIGHT POWER SUPPLY ACCESS. . . .	1	10
	30-0530-5	. LIGHT ASSY,TAIL/STROBE & NAVIGATION/.	1	12
		/ATTACHING PARTS/		
	AN515-8R8	. SCREW	2	
		----*----		
- 7	A4513	. . LENS.	1	12
- 8	30-0329D1	. . RETAINER,STROBE LIGHT LENS.	1	12
- 9	30-0329E1	. . RETAINER,NAVIGATION LIGHT LENS.	1	12
	A1257A	. . GASKET,LENS	2	12
- 10	1683	. . BULB,NAVIGATION LIGHT	1	12
- 11	31-0725-1	. . FLASHTUBE,STROBE LIGHT.	1	12
- 12	30-0329A	. . BASE ASSY,NAVIGATION AND STROBE LIGHT . . .	1	12
	30-0815-1	. LIGHT ASSY,TAIL/STROBE AND NAVIGATION/. . . .	1	6
		/ATTACHING PARTS/		
	MS35206-230	. SCREW	2	
	AN935-6L	. WASHER.	2	
		----*----		
- 13	31-1745	. . FLASHTUBE ASSY,STROBE LIGHT	1	6
- 14	NO.678	. . LIGHT ASSY,NAVIGATION	1	6
- 15	31-2440-3	. . LIGHT SUBASSEMBLY	1	6

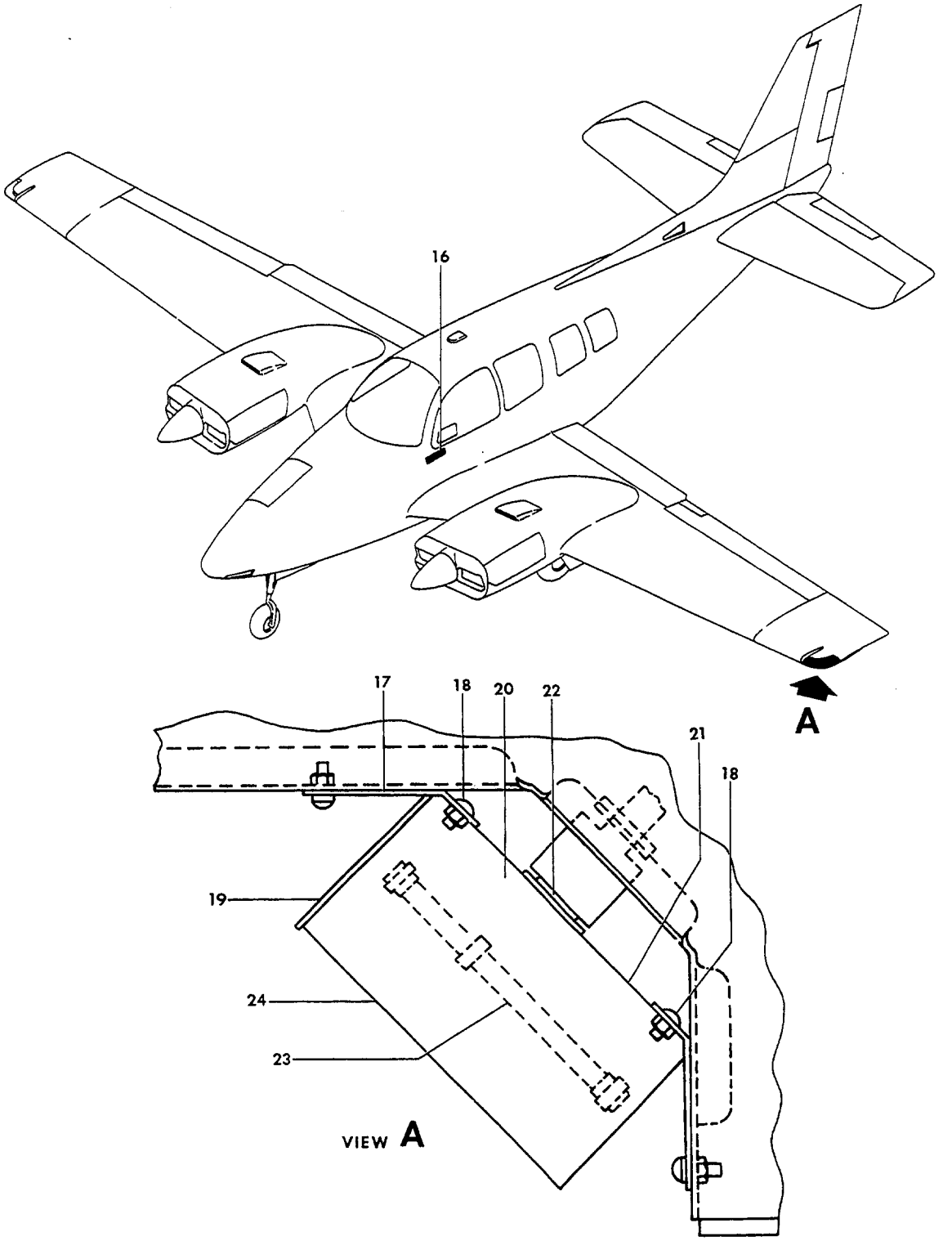

FIGURE 44-10.STROBE LIGHTS
/SHEET 2 OF 2 SHEETS/

ATA CODE & INDEX NO.	PART NO.	DESCRIPTION 1 2 3 4 5 6 7	UNITS PER ASSY	USABLE ON CODE
44-10 - 16	96-364087	PLACARD	1	10
		/ATTACHING PARTS/		
	NAS384-6-12P	SCREW	2	
		——*——		
	30-1467-5	LIGHT ASSY,WING TIP STROBE	2	10
		/ATTACHING PARTS/		
	MS35206-245	SCREW	2	
	AN960-8L	WASHER	2	
		——*——		
- 17	31-3908-1	BRACKET	2	10
- 18	6-32 X 3/8	SCREW	4	10
- 19	31-3921-1	PLATE ASSY,END	1	10
	6-32 X 1/4	SCREW	2	10
- 20	31-3792-3	LIGHT SUBASSEMBLY	1	10
	31-3794-1	PLATE,IDENTIFICATION/ON TOP OF LIGHT ASSY/	1	10
	31-2401-1	PLATE,INSTRUCTION/ON END PLATE ASSY/	1	10
- 21	31-3920-1	BRACKET	1	10
- 22	30-1467-101	CONNECTOR,ELECTRICAL	1	10
	6-32 X 1/4	SCREW	4	10
- 23	55-0221-1	FLASHTUBE,STROBE LIGHT	1	10
- 24	25-0491-1	LENS,STROBE LIGHT	1	10

CODES OF EFFECTIVITY

1	TC-1299 THRU 1415	2	TE-768 THRU TE-860
3	TC-1416 THRU TC-1600	4	TE-856 THRU TE-942 EXCEPT TE-938
5	TC-1601 THRU TC-1606	6	TC-1607
7	TC-1299 THRU TC-1607	8	TE-730 THRU TE-942 EXCEPT TE-938
9	TC-1299 THRU TC-1415 TE-768 THRU TE-860	10	TC-1416 THRU TC-1607 TE-768 THRU TE-942 EXCEPT TE-938
11	TC-1416 THRU TC-1607 TE-856 THRU TE-942 EXCEPT TE-938	12	TC-1299 THRU TC-1606 TE-768 THRU TE-942 EXCEPT TE-938

"END"

33-45-01
UPPER ROTATING BEACON

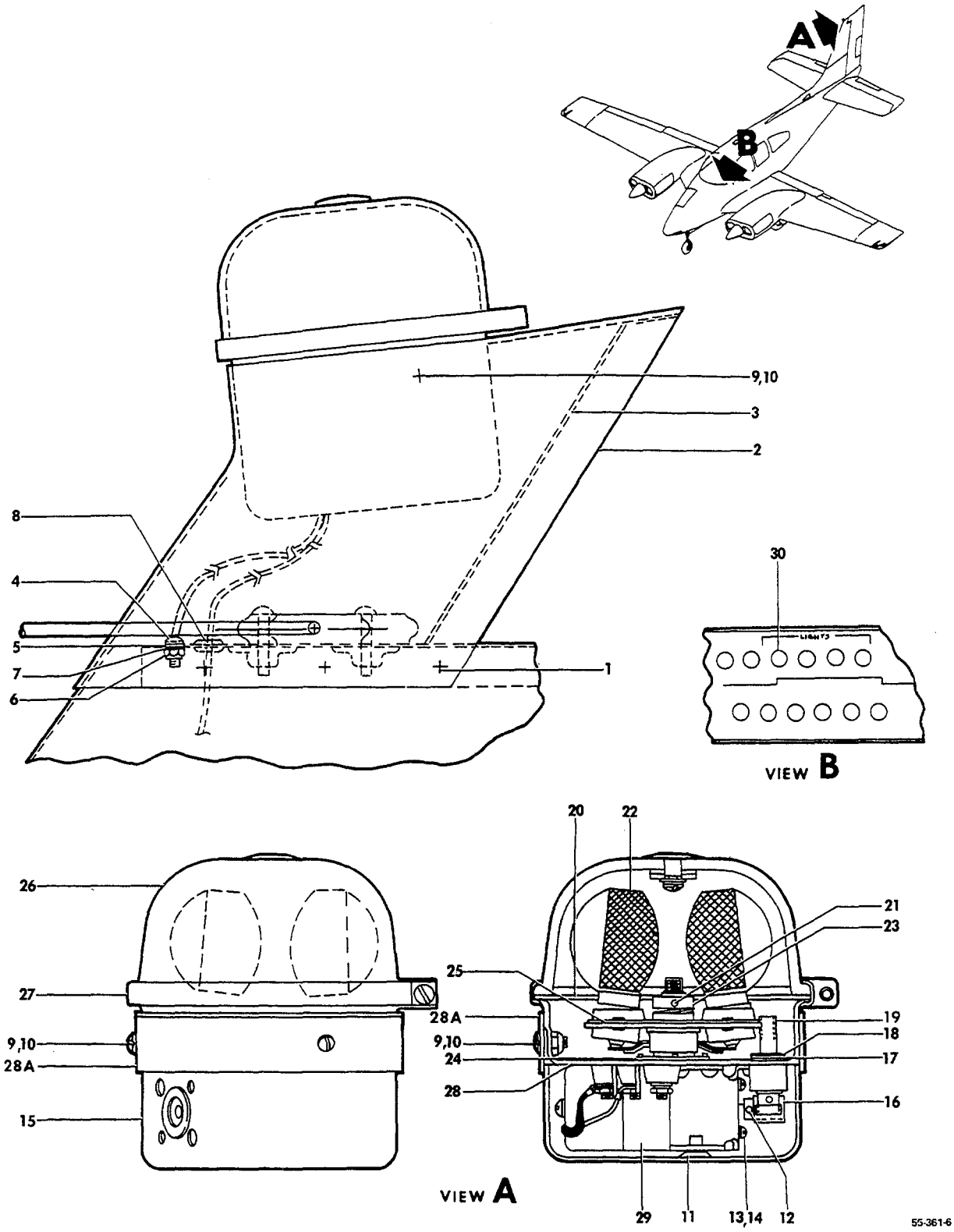

FIGURE 45-01.UPPER ROTATING BEACON

ATA CODE & INDEX NO.	PART NO.	DESCRIPTION 1 2 3 4 5 6 7	UNITS PER ASSY	USABLE ON CODE
45-01	96-364036	LIGHT INSTL,ROTATING BEACON/WITH VRP-37 ANTENNA/	NP	2
	96-364036-5	LIGHT INSTL,ROTATING BEACON/WITHOUT VRP-37. ANTENNA/	NP	2
	96-364010	LIGHT INSTL,ROTATING BEACON/UPPER/.	NP	3
	96-364036-7	. TIP ASSY,ROTATING BEACON/WITHOUT ANTENNA/	1	1
	96-364036-1	. TIP ASSY,ROTATING BEACON/WITH ANTENNA/ /ATTACHING PARTS/	1	1
- 1	AN525-832	. SCREW	6	
		----*----		
- 2	50-364261-5	. . TIP,VERTICAL STABILIZER/USE WITHOUT VRP-37 ANTENNA/	1	1
	96-364036-3	. . TIP,VERTICAL STABILIZER/USE WITH ANTENNA/	1	1
- 3	96-640000-27	. . BULKHEAD.	1	1
- 4	AN515-8	. . SCREW	1	1
- 5	AN960-8	. . WASHER.	1	1
- 6	MS20365-832	. . NUT	1	1
- 7	MS25036-3	. . TERMINAL.	1	1
- 8	AN931-3-5	. . GROMMET	1	1
	96-364036-9	. . LIGHT ASSY,ROTATING BEACON.	1	2
	96-364010-3	. . LIGHT ASSY,ROTATING BEACON. /ATTACHING PARTS/	1	3
- 9	AN515-6R	. . SCREW	3	
- 10	AN960-6L	. . WASHER.	3	
		----*----		
- 11	MS35223-28	. . . SCREW	2	1
- 12	AN565D4H2	. . . SCREW,SET	2	1
- 13	AN515-4-4	. . . SCREW	2	2
	55-207-13	. . . SCREW	2	3
- 14	AN935-4	. . . LOCKWASHER.	2	2
	MS35338-40	. . . LOCKWASHER.	2	3
- 15	A8107-1	. . . COVER ASSY.	1	1
- 16	A7613-1	. . . WORM.	1	1
- 17	A7614	. . . WASHER,THRUST	1	1
- 18	5555-25	. . . RING,GRIP	1	1
- 19	A7615	. . . WORM WHEEL AND PINION	1	1
- 20	A7632	. . . GASKET.	1	1
- 21	AN565B6H2	. . . SCREW	2	1
- 22	A7079B24	. . . LAMP.	2	1
- 23	A7631	. . . COLLAR.	1	2
	11154	. . . COLLAR.	1	3
- 24	16781	. . . WASHER.	1	2
	A7739	. . . WASHER.	1	3
- 25	B7620A	. . . GEAR ASSY	1	2
	21375	. . . GEAR ASSY	1	3
- 26	A7942	. . . LENS AND PLUG ASSY/PAINT OR TAPE BEFORE INSTALLING/RED/	1	2
	A7942-1	. . . LENS AND PLUG-ASSY/PAINT OR TAPE BEFORE INSTALLING/CLEAR/	1	3
- 27	A7635A	. . . RETAINER BAND ASSY.	1	1
- 28	B7605A	. . . MECHANISM PLATE	1	2
	B7605-1	. . . MECHANISM PLATE	1	3
- 28A	B7640-1	. . . FLANGE,MOUNTING	1	1
- 29	41-0190-1	. . . MOTOR ASSY.	1	2
	A6458	. . . MOTOR ASSY.	1	3
- 30	CB3110A	. . SWITCH,CIRCUIT BREAKER.	1	1

CODES OF EFFECTIVITY

1 TC-1 AND AFTER

2 TC-371,TC-502 AND AFTER

3 TC-1 THRU TC-501 EXCEPT TC-371

"END"

33-46-01
LOWER ROTATING BEACON
TC-1403 THRU TC-1607
TE-1 THRU TE-767

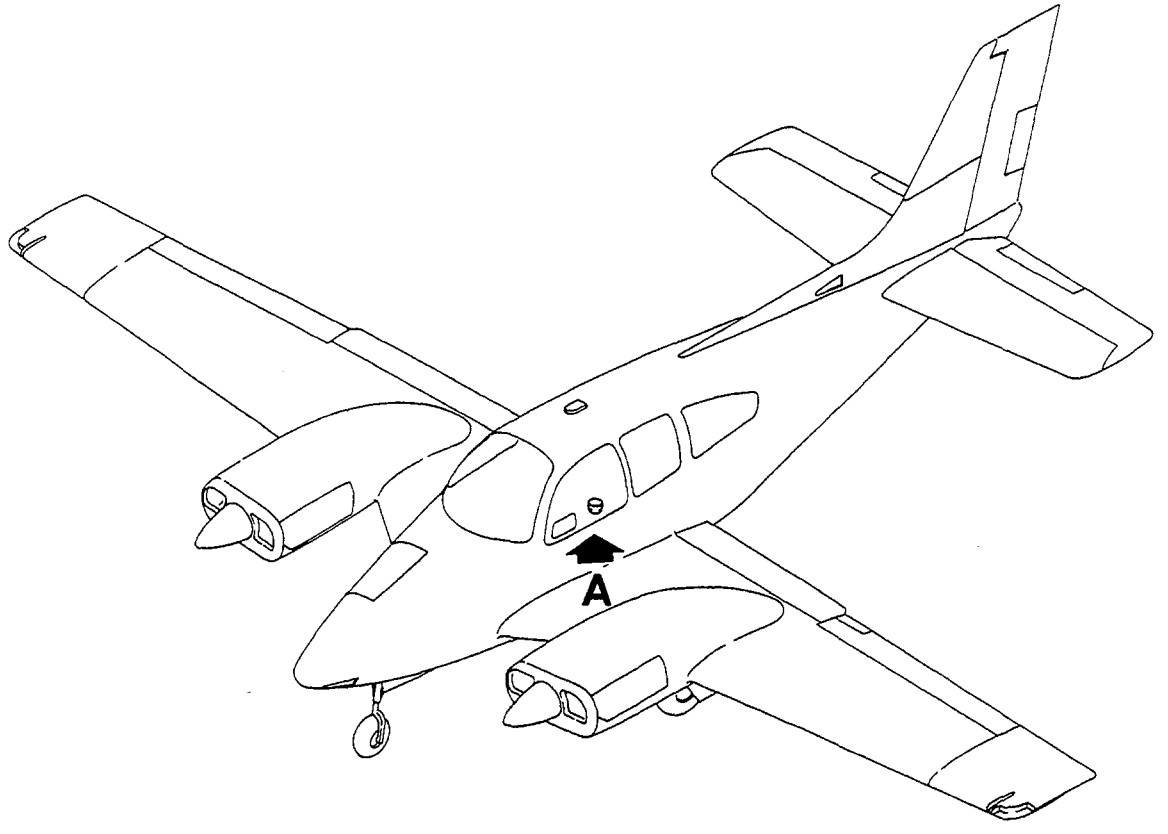

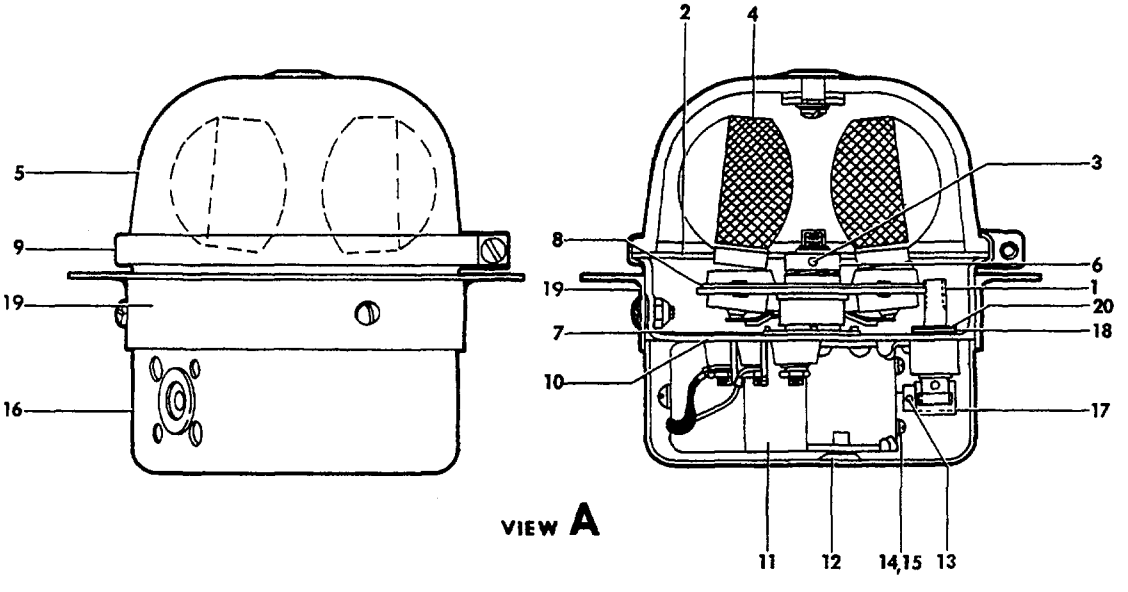

55-361-5

FIGURE 46-01.LOWER ROTATING BEACON

SUB-SECT UNIT & ITEM NO.	PART NO.	DESCRIPTION 1 2 3 4 5 6 7	UNITS PER ASSY	USABLE ON CODE
46-01	95-364027-17	LIGHT INSTL,ROTATING BEACON	NP	1
	95-364027-608	. LIGHT ASSY,BEACON	1	1
	D7080A5-24	. . LIGHT ASSY.	1	1
- 1	A7615	. . . WORM WHEEL AND PINION	1	1
- 2	A7632	. . . GASKET.	1	1
- 3	AN565B6H2	. . . SCREW,SET	2	1
- 4	A7079B24	. . . LAMP.	2	1
- 5	A7942	. . . LENS/REMOVE PLUG FROM LENS/	1	1
- 6	A7631	. . . COLLAR.	1	1
- 7	16781	. . . WASHER.	1	1
- 8	B7620A	. . . GEAR ASSY	1	1
- 9	A7635A	. . . BAND ASSY,LENS RETAINING.	1	1
- 10	B7605A	. . . PLATE,MECHANISM	1	1
- 11	41-0190-3	. . . MOTOR ASSY.	1	1
- 12	MS35223-28	. . . SCREW	5	1
- 13	AN565D4H2	. . . SCREW,SET	2	1
- 14	AN515-4-4	. . . SCREW	2	1
- 15	AN935-4	. . . LOCKWASHER.	2	1
- 16	A8107-1	. . . COVER ASSY.	1	1
- 17	A7613-1	. . . WORM.	1	1
- 18	A7614	. . . WASHER,THRUST	1	1
- 19	B7640-1	. . . FLANGE,MOUNTING	1	1
- 20	5555-25	. . . RING,GRIP	1	1
	95-364027-21	. . DOUBLER ASSY.	1	1
	95-364027-31	. . SPACER.	1	1
	AN515-6R8	. . SCREW	5	1

CODES OF EFFECTIVITY

1 TC-1403 THRU TC-1607
TE-1 THRU TE-767

"END"

33-47-01
UPPER OSCILLATING BEACON
TE-768 THRU TE-942 EXCEPT TE-938

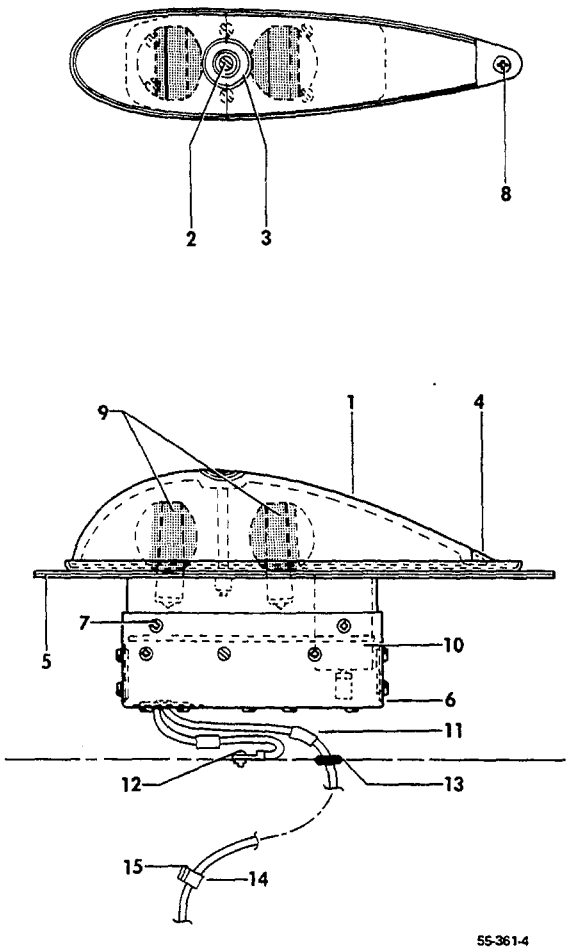

BEACON ASSY UPPER OSCILLATING

FIGURE 47-01.UPPER OSCILLATING BEACON

SUB-SECT UNIT & ITEM NO.	PART NO.	DESCRIPTION 1 2 3 4 5 6 7	UNITS PER ASSY	USABLE ON CODE
47-01	58-360021	LIGHT INSTL,UPPER OSCILLATING BEACON.	NP	1
	40-0127-1	. LIGHT ASSY.	1	1
- 1	D9961-3	. . LENS.	1	1
- 2	AN507C1032-40	. . SCREW,LENS RETAINING.	1	1
- 3	A4253-3	. . WASHER.	1	1
- 4	12613-1	. . CLIP.	1	1
- 5	32495-1	. . PLATE,MOUNTING.	1	1
- 6	41-0832-3	. . MECHANISM ASSY.	1	1
- 7	AN507-632R5	. . SCREW	8	1
- 8	AN507C1032-10	. . SCREW	1	1
- 9	A7079B24	. . LAMP.	2	1
- 10	55-0069-1	. . MOTOR	1	1
- 11	32446	. DISCONNECT.	2	1
- 12	R AN515-6R5	. SCREW	1	1
- 13	AN931-2-9	. GROMMET	1	1
- 14	49158	. CLAMP	2	1
- 15	49296	. CLIP.	2	1
	106242	. TUBING,INSULATION/USE TO COVER BEACON WIRE/ .	AR	1

CODES OF EFFECTIVITY

1 TE-768 THRU TE-942
EXCEPT TE-938

33-48-01
WING ICE LIGHT
TC-191 THRU TC-1607
TE-1 THRU TE-942 EXCEPT TE-938

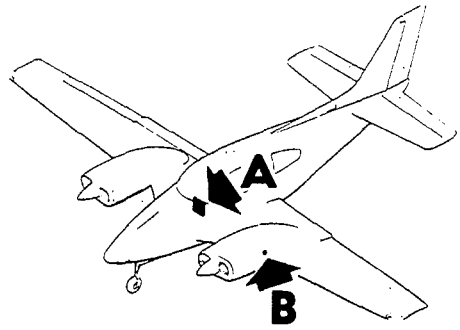

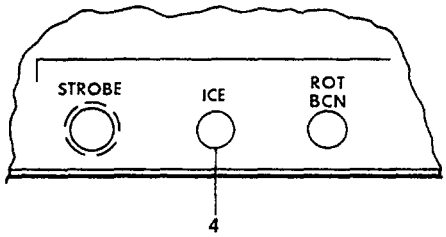

VIEW **A**

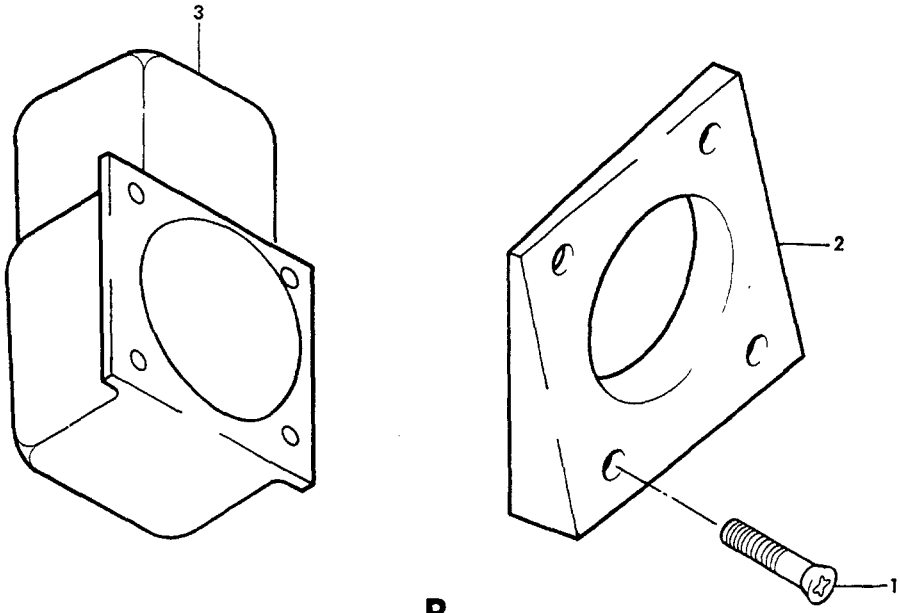

VIEW **B**

55-367-3

FIGURE 48-01.WING ICE LIGHT

ATA CODE & INDEX NO.	PART NO.	DESCRIPTION 1 2 3 4 5 6 7	UNITS PER ASSY	USABLE ON CODE
48-01	96-361010	ICE LIGHT INSTL,WING.	NP	1
	96-361010-3	ICE LIGHT INSTL,WING.	NP	2
		/ATTACHING PARTS/		
- 1	AN505-6R	SCREW	4	
		----*----		
- 2	96-361010-1	. SPACER.	2	3
- 3	MS25318-1	. LIGHT ASSY,WING ICE	2	3
	002-361010-15	. LIGHT ASSY,WING ICE/SPARES REPL FOR	2	3
		MS25318-1/		
	113-205-102	. CIRCUIT BREAKER	1	1
- 4	35-380132-41	. CIRCUIT BREAKER SWITCH.	1	2

CODES OF EFFECTIVITY

1 TC-191 AND AFTER
TE-1 THRU TE-767

2 TE-768 THRU TE-942
EXCEPT TE-938

3 TC-191 AND AFTER
TE-1 THRU TE-942
EXCEPT TE-938

"END"

33-49-01
LOWER OSCILLATING BEACON
TE-768 THRU TE-942 EXCEPT TE-938

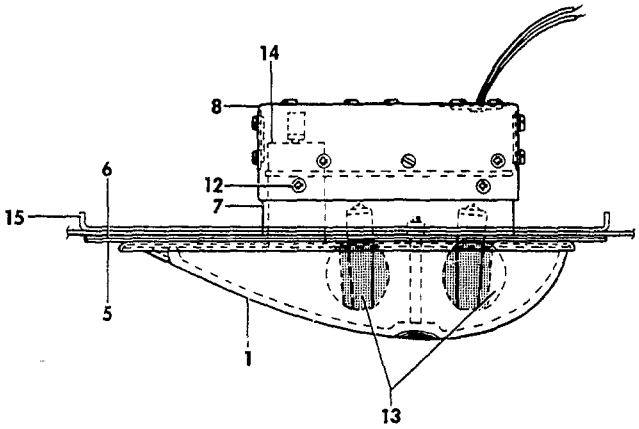

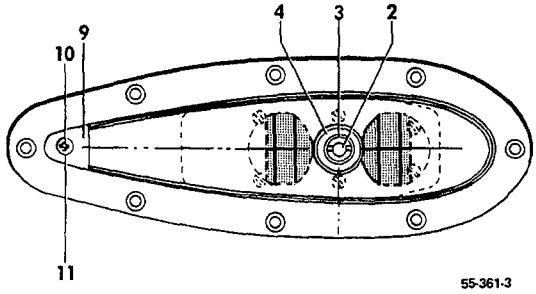

BEACON ASSY LOWER OSCILLATING

FIGURE 49-01.LOWER OSCILLATING BEACON

ATA CODE & INDEX NO.	PART NO.	DESCRIPTION 1 2 3 4 5 6 7	UNITS PER ASSY	USABLE ON CODE
49-01	96-364078	LIGHT INSTL,LOWER OSCILLATING BEACON.	NP	1
	40-0100-3	. LIGHT ASSY.	1	1
- 1	D9961-3	. . LENS.	1	1
- 2	AN565D6H4	. . SCREW,SET	1	1
- 3	13731-3	. . SCREW	1	1
- 4	13737	. . WASHER.	1	1
- 5	34300-9	. . PLATE,MOUNTING.	1	1
- 6	36112	. . GASKET.	1	1
- 7	33793-11	. . COVER,MECHANISM	1	1
- 8	41-0832-1	. . MECHANISM ASSY.	1	1
- 9	12613-1	. . CLIP,LENS RETAINING	1	1
- 10	LP507-10-32	. . SCREW	1	1
- 11	MS35333-73	. . WASHER.	1	1
- 12	MS35223-27	. . SCREW	4	1
- 13	A7079824	. . LAMP.	2	1
- 14	55-0069-1	. . MOTOR	1	1
	96-364078-1	. REINFORCEMENT ASSY. . . . . /ATTACHING PARTS/	1	1
	AN509-10R8	. SCREW	8	1
		----*----		
- 15	96-364078-3	. REINFORCEMENT	1	1
	AN366F1032	. NUTPLATE.	8	1

CODES OF EFFECTIVITY

1 TE-768 THRU TE-942
EXCEPT TE-938

"END"

CHAPTER

34

NAVIGATION

LIST OF PAGES & TABLE OF CONTENTS FOR CHAPTER 34-00-00 NAVIGATION, PITOT/STATIC

CHAP/SUB-SECT & UNIT	PAGE NO.	EFFECTIVE DATE	TABLE OF CONTENTS
34-00-00	1	04/05/85	LIST OF PAGES & TABLE OF CONTENTS
34-10-01	1	03/10/78	PITOT AND STATIC SYSTEM
34-10-01	2	03/10/78	TC-1 THRU TC-1607
34-10-01	3	03/10/78	TE-1 THRU TE-451
34-10-01	4	03/10/78	
34-10-01	5	04/05/85	
34-10-01	6	03/10/78	
34-10-01	7	03/10/78	
34-10-10	1	03/10/78	PITOT AND STATIC SYSTEM
34-10-10	2	03/10/78	TE-452 THRU TE-942 EXCEPT TE-938
34-10-10	3	03/10/78	
34-10-10	4	03/10/78	
34-10-10	5	03/10/78	
34-10-20	1	03/10/78	FLIGHT DATA INSTRUMENTS
34-10-20	2	03/10/78	
34-10-20	3	03/10/78	

34-10-01
PITOT AND STATIC SYSTEM
TC-1 THRU TC-1607
TE-1 THRU TE-451

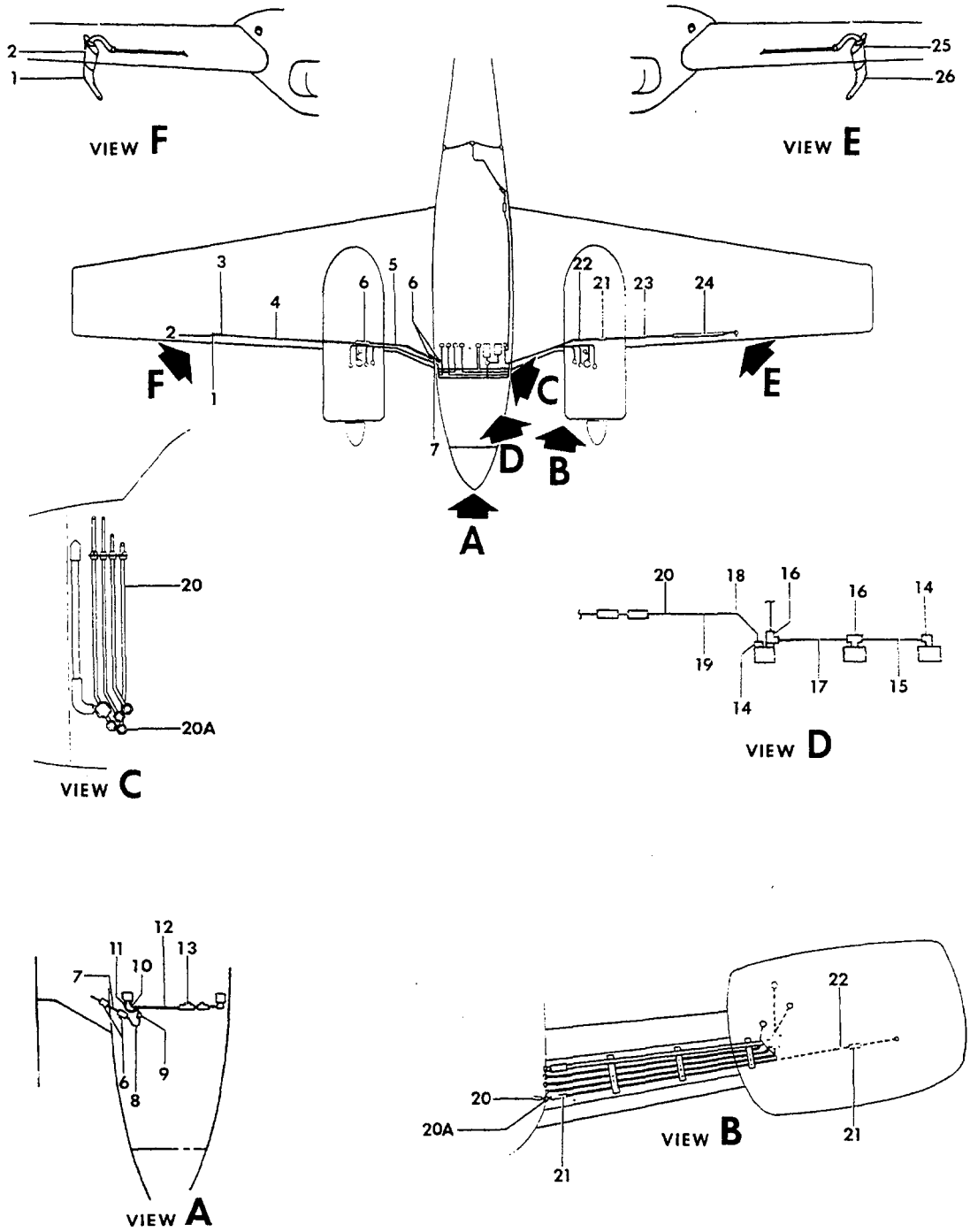

FIGURE 10-01.PITOT AND STATIC SYSTEM
/SHEET 1 OF 3 SHEETS

ATA CODE & INDEX NO.	PART NO.	DESCRIPTION 1 2 3 4 5 6 7	UNITS PER ASSY	USABLE ON CODE
10-01	95-324076-3	DUAL AIRSPEED AND PITOT INSTL/OPT RH/	NP	2
	96-324054 1	DUAL AIRSPEED AND PITOT INSTL/OPT RH/	NP	11
	96-324054-1	DUAL AIRSPEED AND PITOT INSTL/OPT RH/	NP	5
	96-324054-3	DUAL AIRSPEED AND PITOT INSTL/OPT RH WEDGE LIT/	NP	14
	96-324054-5	DUAL AIRSPEED AND PITOT INSTL/OPT RH WEDGE LIT/	NP	5
- 1	50-384040	. TUBE,PITOT.	1	1
- 2	95-324076-21	. MAST ASSY,RH PITOT.	1	1
	95-324018-143	. TUBE,PITOT MAST CONNECTING.	1	12
- 3	96-324038-39	. TUBE,PITOT MAST CONNECTING.	1	13
- 4	95-324076-17	. TUBE,RH WING.	1	12
- 4A	95-324076-15	. TUBE,RH WING.	1	1
- 4B	95-324018-185	. TUBE,CONNECTING/RH WING/.	1	12
- 5	95-324076-23	. TUBE,RH NACELLE	1	1
- 6	95-324018-135	. TUBE,CONNECTING/RH NACELLE & FUSELAGE/. . . .	AR	1
- 7	AN846-4D	. ELBOW,RH FUSELAGE/PITOT/.	1	1
- 8	95-324076-11	. TUBE,RH FUSELAGE/PITOT/	1	1
- 9	AN832-4D	. ELBOW,RH FUSELAGE/PITOT/.	1	1
- 10	AN6270-4-12	. HOSE ASSY,RH AIRSPEED IND/PITOT/.	1	1
- 11	AN322-4D	. ELBOW,RH AIRPSEED IND/PITOT & STATIC/	2	1
	95-324076-7	. TUBE ASSY/RH A/S IND TO RATE OF CLIMB IND/. .	1	2
- 12	AN6270-4-47	. HOSE ASSY/RH A/S IND TO RATE OF CLIMB IND/. .	1	6
- 13	AN826-4D	. TEE/REPLACES AN816-4D NIPPLE/	1	1
	95-324018	INSTRUMENT PLUMBING INSTL	NP	2
	96-324038	INSTRUMENT PLUMBING INSTL	NP	3
	96-324038-41	INSTRUMENT PLUMBING INSTL	NP	4
	96-324038-109	INSTRUMENT PLUMBING INSTL	NP	5
- 14	AN816-4D	. NIPPLE.	2	1
	95-324018-205	. TUBE ASSY/RATE OF CLIMB IND & ALTIMETER/. . .	1	2
	96-324038-5	. TUBE ASSY/RATE OF CLIMB IND & ALTIMETER/. . .	1	9
- 15	96-324038-97	. TUBE ASSY/RATE OF CLIMB IND & ALTIMETER/. . .	1	10
- 16	AN826-4D	. TEE	2	1
	95-324018-201	. TUBE ASSY/ALTIMETER TO AIRSPEED IND/.	1	2
	96-324038-35	. TUBE ASSY/ALTIMETER TO AIRSPEED IND/.	1	7
- 17	96-324128-21	. TUBE ASSY/ALTIMETER TO AIRSPEED IND/.	1	8
- 18	AN6270-4-12	. HOSE ASSY,AIRSPEED IND/PITOT/	1	1
- 19	AN833-4D	. ELBOW,LH FUSELAGE/PITOT/.	1	1
	95-324018-7	. TUBE ASSY,LH FUSELAGE/PITOT/.	1	2
- 20	96-324038-61	. TUBE ASSY,LH FUSELAGE/PITOT/.	1	6
	AN924-4D	. ELBOW,LH FUSELAGE/PITOT/.	1	2
- 20A	AN931-4-7	. GROMMET,LH FUSELAGE/PITOT/.	1	6
- 21	106200H-4-24	. HOSE,CONNECTING/PITOT/INBD WING	2	6
	95-324018-135	. HOSE,CONNECTING/PITOT/WING.	3	1
- 22	95-324018-223	. TUBE,LH WING INBD/PITOT/.	1	1
- 23	95-324018-221	. TUBE,LH WING NACELLE/PITOT/	1	1
	95-324018-219	. TUBE,LH WING OUTBD/PITOT/	1	2
	95-324018-185	. TUBE,CONNECTING/OUTBD WING/	1	2
- 24	106200H4-90	. HOSE,LH OUTBD WING/PITOT MAST/.	1	6
	95-324018-143	. TUBE,CONNECTING/PITOT MAST/	1	2
- 25	95-324018-151	. MAST ASSY,PITOT	1	1
- 26	50-384040	. TUBE,PITOT.	1	1

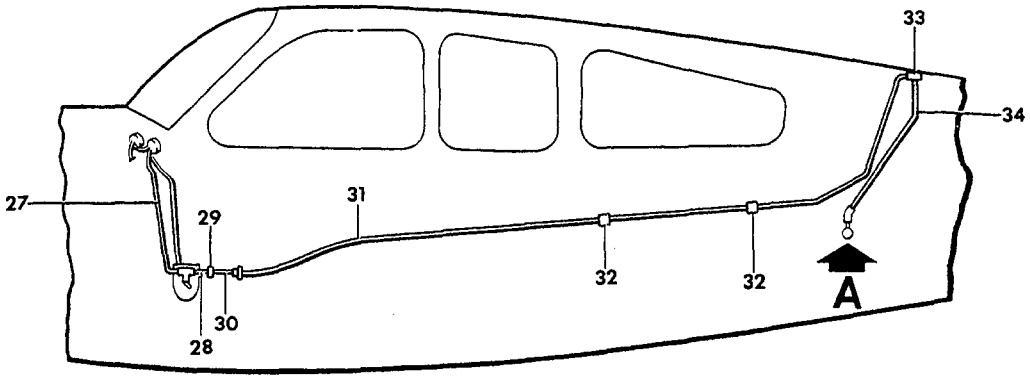

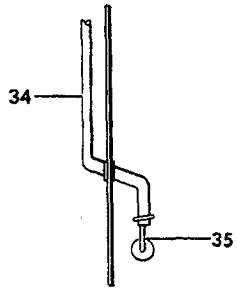

VIEW A

B55-394-24

FIGURE 10-01.PITOT AND STATIC SYSTEM
/SHEET 2 OF 3 SHEETS/

SUB-SECT UNIT & ITEM NO.	PART NO.	DESCRIPTION 1 2 3 4 5 6 7	UNITS PER ASSY	USABLE ON CODE
10-01	95-324018-145	. HOSE ASSY,STATIC AIR/AIRSPEED IND/.	1	2
	96-324038-37	. HOSE ASSY,STATIC AIR/AIRSPEED IND/.	1	15
- 27	96-324038-131	. TUBE ASSY,STATIC AIR/AIRSPEED IND/.	1	16
	R AN824-4D	. TEE	1	16
	AN929-4D	. CAP,TEE	1	16
	R 96-324038-129	. HOSE ASSY,STATIC DRAIN.	1	16
	35-324323-7	. HOSE,CONNECTING/STATIC AIR W/O DRAIN INSTL/ .	1	2
- 28	96-324012-65	. TUBE ASSY,STATIC AIR/WITH DRAIN INSTL/. . . .	1	1
- 29	AN916-6D	. REDUCER,STATIC AIR/WITH DRAIN INSTL/.	1	1
	35-324098	. TUBE ASSY,STATIC AIR/FWD CABIN/	1	2
	AN815-5D	. UNION	1	2
	96-324038-69	. TUBE ASSY,STATIC AIR/FWD CABIN/	1	25
- 30	58-324021-41	. TUBE ASSY,STATIC AIR/FWD CABIN/	1	16
	95-324018-211	. TUBE ASSY,STATIC AIR/AFT CABIN/	1	2
	96-324038-67	. TUBE ASSY,STATIC AIR/MID CABIN/	1	24
	96-324038-65	. TUBE ASSY,STATIC AIR/AFT CABIN/	1	25
	96-324038-63	. TUBE ASSY,STATIC AIR/AFT FUSELAGE/.	1	26
	96-324038-47	. TUBE ASSY,STATIC AIR/AFT FUSELAGE/.	1	27
	AN832-6D	. FITTING,BHD	3	25
	AN924-6	. NUT	3	25
- 31	58-324021-45	. TUBE ASSY,STATIC AIR/CABIN/	1	16
- 32	100ABMS-A-C	. CLAMP	2	16
	AN824-4D	. TEE,STATIC AIR/AFT FUSELAGE/.	1	21
- 33	264PX1/2	. TEE,STATIC AIR/AFT FUSELAGE/.	1	16
	95-324018-213	. TUBE,STATIC AIR/AFT FUSELAGE/	2	2
	96-324038-43	. TUBE ASSY,STATIC AIR LH/AFT FUSELAGE/	1	28
	96-324038-45	. TUBE ASSY,STATIC AIR RH/AFT FUSELAGE/	1	28
	96-324038-77	. TUBE ASSY,STATIC AIR LH/AFT FUSELAGE/	1	29
	96-324038-78	. TUBE ASSY,STATIC AIR RH/AFT FUSELAGE/	1	29
	106200H6-16	. HOSE,STATIC AIR CONNECTING/AFT FUSELAGE/. . .	2	25
	A12	. CLAMP	4	25
- 34	58-324021-43	. TUBE,STATIC AIR/AFT FUSELAGE/	2	16
- 35	96-440012-1	. BUTTON,STATIC AIR/AFT FUSELAGE/	2	16
	96-440014	. BUTTON,STATIC AIR/AFT FUSELAGE/	2	29

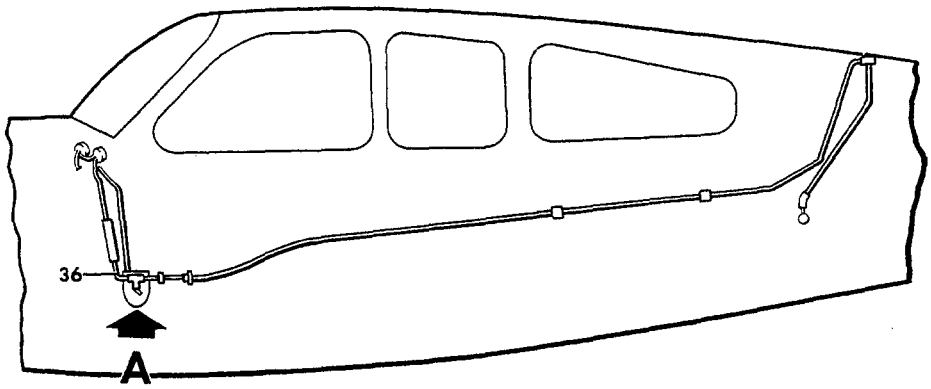

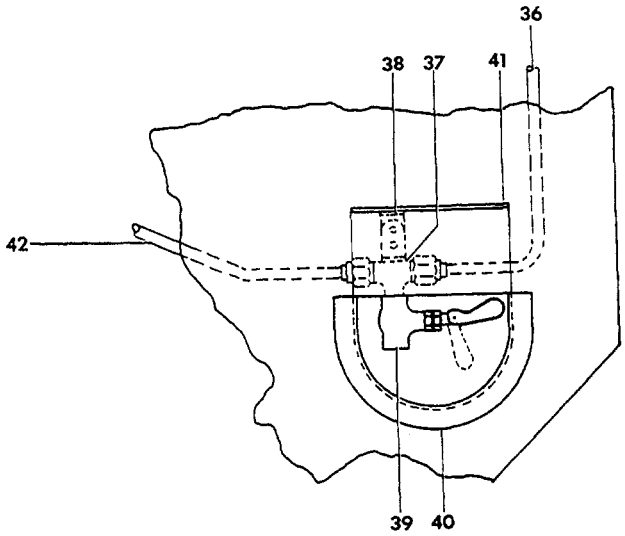

VIEW A

855-394-25

FIGURE 10-01.PITOT AND STATIC SYSTEM
/SHEET 3 OF 3 SHEETS

ATA CODE & INDEX NO.	PART NO.	DESCRIPTION 1 2 3 4 5 6 7	UNITS PER ASSY	USABLE ON CODE
10-01	96-324038	. AIR SOURCE INSTL,EMERGENCY STATIC	NP	17
	96-324038	. AIR SOURCE INSTL,EMERGENCY STATIC	NP	18
	58-324046-1	. DRAIN INSTL,STATIC AIR.	NP	19
- 36	95-970000-141	. . TUBE ASSY,STATIC AIR DRAIN.	1	1
- 37	MS20825-4D	. . TEE,STATIC AIR DRAIN.	1	1
- 38	AN743-13	. . BRACKET	2	1
- 39	35-324428-11	. . VALVE ASSY,STATIC AIR DRAIN	1	31
	96-324148	. . GUARD,STATIC AIR DRAIN VALVE.	1	20
	58-380032	. . VALVE ASSY,STATIC AIR DRAIN	1	18
	95-970000-151	. . COVER,STATIC DRAIN.	1	23
- 40	35-324428-23	. . COVER,STATIC DRAIN.	1	22
	96-324141	. . PLATE INSTRUCTION,STATIC AIR.	1	23
	58-324047-1	. . PLATE INSTRUCTION,STATIC AIR.	1	22
- 41	96-324038-95	. . TUBE ASSY,STATIC AIR DRAIN.	1	1

CODES OF EFFECTIVITY

1	TC-1 THRU TC-1607 TE-1 THRU TE-451	2	TC-1 THRU TC-190
3	TC-191 THRU TC-954	4	TC-955 THRU TC-1607
5	TE-1 THRU TE-451	6	TC-191 THRU TC-1607 TE-1 THRU TE-451
7	TC-191 THRU TC-1156	8	TC-1157 THRU TC-1607
9	TC-191 THRU TC-940	10	TC-941 THRU TC-1607
11	TC-191 THRU TC-1607	12	TC-1 THRU TC-399
13	TC-400 THRU TC-1607 TE-1 THRU TE-451	14	TC-1299 THRU TC-1607
15	TC-191 THRU TC-1402 TE-1 THRU TE-451	16	TC-1403 THRU TC-1607
17	TC-1 THRU TC-1372	18	TC-1373 THRU TC-1402
19	TC-1403 THRU TC-1607	20	TC-1117 THRU TC-1137
21	TC-1 THRU TC-1402 TE-1 THRU TE-451	22	TC-1138 THRU TC-1607
23	TC-1 THRU TC-1137 TE-1 THRU TE-451	24	TC-1 THRU TC-954
25	TC-955 THRU TC-1402 TE-1 THRU TE-451	26	TC-191 THRU TC-677
27	TC-678 THRU TC-1402 TE-1 THRU TE-451	28	TC-191 THRU TC-934
29	TC-935 THRU TC-1402 TE-1 THRU TE-451	30	TC-678 THRU TC-934
31	TC-1 THRU TC-1607 EXCEPT TC-1373 THRU TC-1402 TE-1 THRU TE-451		

"END"

34-10-10
PITOT AND STATIC SYSTEM
TE-452 THRU TE-942 EXCEPT TE-938

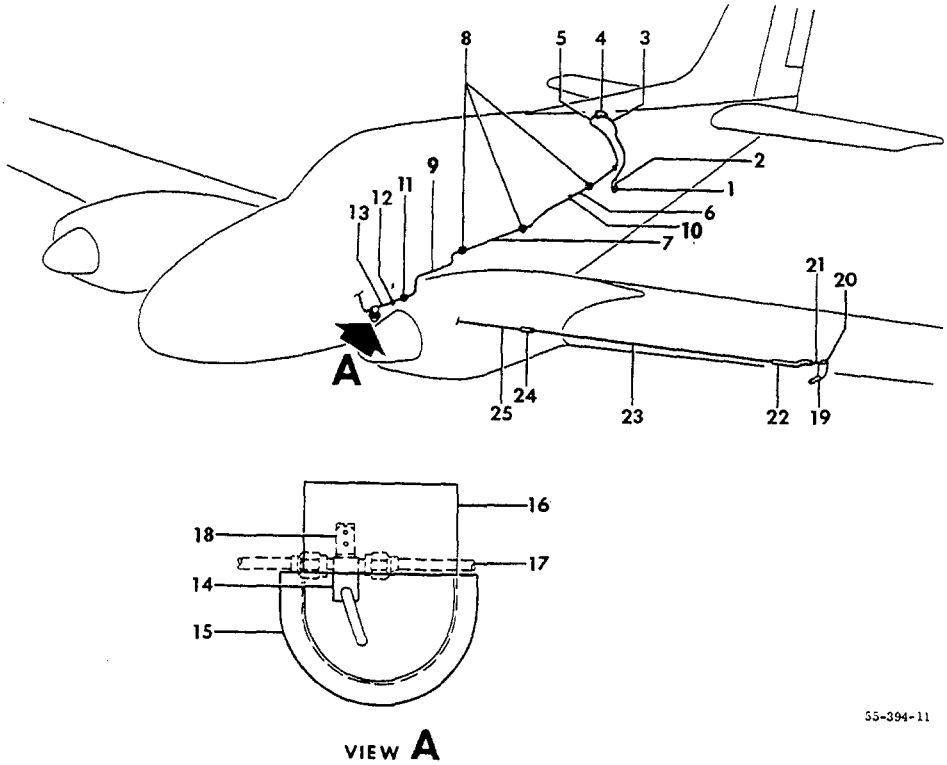

FIGURE 10-10.PITOT AND STATIC SYSTEM
/SHEET 1 OF 2 SHEETS/

ATA CODE & INDEX NO.	PART NO.	DESCRIPTION 1 2 3 4 5 6 7	UNITS PER ASSY	USABLE ON CODE
10-10	96-324012-3	PLUMBING INSTL,FUSELAGE INSTRUMENT & PRESSURE .	NP	10
	58-324021-1	PLUMBING INSTL,FUSELAGE INSTRUMENT & PRESSURE .	NP	11
- 1	96-440012-1	. BUTTON,STATIC AIR	2	1
- 2	106200H20	. HOSE,STATIC PRESSURE/LH & RH/	2	2
	106200H6-6	. HOSE,STATIC PRESSURE/LH & RH/	2	3
	A12	. CLAMP	4	2
	A10	. CLAMP	4	3
- 3	96-324038-77	. TUBE ASSY,LH STATIC PRESSURE.	1	2
	96-324038-78	. TUBE ASSY,RH STATIC PRESSURE.	1	2
	58-324021-67	. TUBE,STATIC PRESSURE/LH & RH/	2	3
	58-324021-43	. TUBE,STATIC PRESSURE/LH & RH/	2	3
- 4	AN824-6D	. TEE	1	2
	264PX1/2	. TEE	1	3
- 5	96-324038-63	. TUBE ASSY,STATIC PRESSURE	1	2
- 6	96-324038-65	. TUBE ASSY,STATIC PRESSURE	1	2
- 7	96-324038-67	. TUBE ASSY,STATIC PRESSURE	1	2
- 8	AN832-4D	. UNION	3	2
	AN960-617	. WASHER.	3	2
	AN924-6D	. NUT	3	2
- 9	96-324038-69	. TUBE ASSY,STATIC PRESSURE	1	10
	58-324021-29	. TUBE ASSY,STATIC PRESSURE	1	12
	58-324021-45	. TUBE ASSY,STATIC PRESS./FWD CABIN TO AFT FUS/	1	13
- 10	MS35489-14S	. GROMMET,STATIC PRESSURE TUBE.	7	1
- 11	AN919-6D	. REDUCER	1	2
- 12	MS35489-7S	. GROMMET,STATIC PRESSURE TUBE/F.S. 68.00/. . .	1	1
- 13	96-324012-65	. TUBE ASSY,STATIC PRESSURE	1	10
	58-324021-19	. TUBE ASSY,STATIC PRESSURE	1	12
	58-324021-33	. TUBE ASSY,STATIC PRESSURE	1	13
	96-324068	. AIR SOURCE INSTL,EMERGENCY STATIC/STANDARD/ .	NP	4
	96-324068-3	. AIR SOURCE INSTL,EMERGENCY STATIC/STANDARD/ .	NP	5
	96-324068-3	. AIR SOURCE INSTL,EMERGENCY STATIC/OPTIONAL/ .	NP	3
	58-324046-1	. DRAIN INSTL,STATIC AIR/STANDARD/.	NP	3
	35-324428-11	. . VALVE,EMERGENCY STATIC AIR.	1	9
- 14	58-380032	. . VALVE,STATIC AIR DRAIN.	1	8
	95-970000-151	. . COVER,STATIC AIR SOURCE VALVE	1	6
- 15	35-324428-23	. . COVER/AIR SOURCE & AIR DRAIN VALVE/	1	7
	96-324141	. . PLATE,INSTRUCTION	1	4
- 16	58-324043	. . PLATE,INSTRUCTION	1	8
	58-324047-1	. . PLACARD,STATIC AIR DRAIN INSTRUCTION. . . .	1	3
- 17	95-970000-141	. . TUBE ASSY,STATIC PRESSURE	1	1
- 18	AN743-13	. . BRACKET,SUPPORT	2	1
- 19	50-384040	. TUBE,PITOT.	1	1
	AN507-640R4	. SCREW	4	1
- 20	95-324018-151	. MAST ASSY,LH PITOT.	1	1
	AN509-8R8	. SCREW	4	1
- 21	35-361109	. TUBE ASSY,LH PITOT MAST	1	1
- 22	106200H4-90	. HOSE,CONNECTING/LH OUTBD WING PITOT/.	1	1
	A8	. CLAMP	AR	1
- 23	95-324018-221	. TUBE,LH OUTBD WING PITOT.	1	10
	96-324106-1	. TUBE,ASSY,LH OUTBD WING PITOT	1	11
- 24	106200H4-24	. HOSE,CONNECTING/LH INBD WING PITOT/	2	1
- 25	96-324018-13	. TUBE,LH INBD WING PITOT	1	10
	96-324106-7	. TUBE ASSY,LH INBD WING PITOT.	1	11

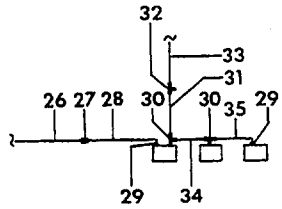

VIEW A

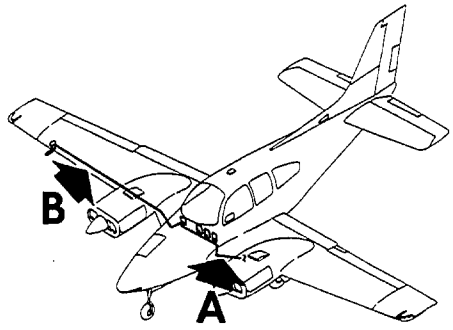

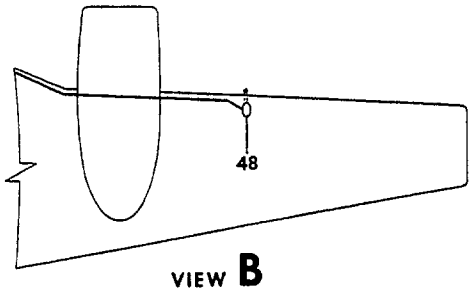

VIEW B

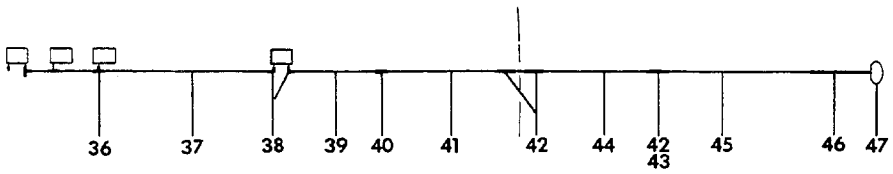

B55-394-12

FIGURE 10-10.PITOT AND STATIC SYSTEM
/SHEET 2 OF 2 SHEETS/

ATA CODE & INDEX NO.	PART NO.	DESCRIPTION 1 2 3 4 5 6 7	UNITS PER ASSY	USABLE ON CODE
10-10	96-324128-1	PLUMBING INSTL,SINGLE INSTRUMENT PANEL.	NP	1
	96-324128-3	PLUMBING INSTL,DUAL INSTRUMENT PANEL.	NP	1
- 26	96-324038-61	. TUBE ASSY,LH FUS PITOT.	1	1
- 27	AN837-4D	. ELBOW,LH FUS PITOT.	1	1
	AN960PD716	. WASHER.	1	1
	AN924-4D	. NUT	1	1
- 28	AN6270-4-17	. HOSE ASSY,PITOT/AIRSPEED IND/	1	1
- 29	AN816-4D	. NIPPLE.	2	1
- 30	AN826-4D	. TEE	2	1
- 31	96-324038-131	. TUBE ASSY,INSTRUMENT STATIC	1	1
- 32	AN824-4D	. TEE	1	1
	AN929-4D	. CAP,TEE	1	1
- 33	96-324038-129	. HOSE ASSY,STATIC.	1	1
	AN737TW22	. CLAMP,HOSE.	1	1
- 34	96-324128-21	. TUBE ASSY,PITOT/AIRSPEED IND TO ALTIMETER/. .	1	1
- 35	96-324128-19	. TUBE ASSY,PITOT/ALTIMETER TO RATE OF CLIMB/ .	1	1
	96-324054-1	PLUMBING INSTL,DUAL AIRSPEED & PITOT/RH/. . . .	NP	1
- 36	AN824-4D	. TEE/REPLACES AN816-4D NIPPLE/	1	1
- 37	AN6270-4-47	. HOSE ASSY,PITOT/RH AIRSPEED IND TO ROC IND/ .	1	1
- 38	AN822-4D	. ELBOW	2	1
- 39	AN6270-4-12	. HOSE ASSY,PITOT/RH AIRSPEED IND/.	1	1
- 40	AN832-4D	. ELBOW,RH FUS PITOT.	1	1
	AN960-716	. WASHER.	1	1
	AN924-4D	. NUT	1	1
- 41	95-324076-11	. TUBE ASSY,RH FUS PITOT.	1	1
- 42	95-324018-135	. HOSE,CONNECTING/PITOT/.	3	1
- 43	AN846-4D	. ELBOW	1	1
	AN960-716	. WASHER.	1	1
	AN924-4D	. NUT	1	1
- 44	95-324076-23	. TUBE,RH INBD WING PITOT	1	1
- 45	95-324076-15	. TUBE,RH OUTBD WING PITOT.	1	1
- 46	96-324038-39	. HOSE,RH PITOT MAST CONNECTING	1	1
- 47	95-324076-21	. MAST ASSY,RH PITOT.	1	1
	AN520-6R4	. SCREW	4	1
- 48	50-384040	. TUBE,PITOT.	1	1
	AN515-8R8	. SCREW	4	1
	31TOA	. BREAKER,CIRCUIT	1	1

CODES OF EFFECTIVITY

1 TE-452 THRU TE-942 EXCEPT TE-938
2 TE-452 THRU TE-846
3 TE-847 THRU TE-942
4 TE-452 THRU TE-832
5 TE-833 THRU TE-846
6 TE-452 THRU TE-613
7 TE-614 THRU TE-942 EXCEPT TE-938
8 TE-833 THRU TE-942 EXCEPT TE-938
9 TE-768 THRU TE-842, TE-847 THRU TE-942 EXCEPT TE-938
10 TE-452 THRU TE-767
11 TE-768 THRU TE-942 EXCEPT TE-938
12 TE-768 THRU TE-846
13 TE-847 THRU TE-942 EXCEPT TE-938

"END"

34-10-20
FLIGHT DATA INSTRUMENTS

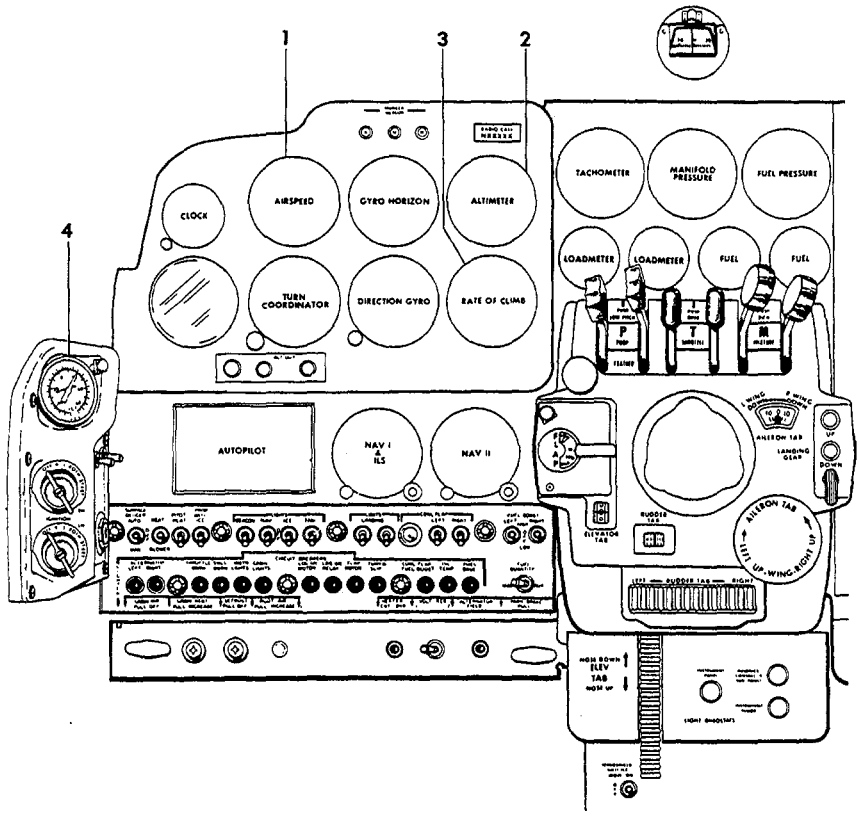

55-391-23

FIGURE 10-20.FLIGHT DATA INSTRUMENTS

ATA CODE & INDEX NO.	PART NO.	DESCRIPTION 1 2 3 4 5 6 7	UNITS PER ASSY	USABLE ON CODE
10-20	95-324007-7	PANEL ASSY,FLOATING	NP	1
	96-324029	PANEL INSTL,INSTRUMENT/WITH GENERATOR/	NP	2
	96-324029-9	PANEL INSTL,INSTRUMENT/WITH ALTERNATOR/	NP	3
	96-324056	PANEL INSTL,INSTRUMENT	NP	4
	96-324008	PANEL INSTL,INSTRUMENT	NP	5
	96-324005	PANEL INSTL,DUAL INSTRUMENT	NP	6
	96-324006	PANEL INSTL,DUAL INSTRUMENT	NP	7
	58-324000-11	PANEL INSTL,SINGLE INSTRUMENT	NP	8
	58-324001-1	PANEL INSTL,DUAL INSTRUMENT	NP	8
	58-324039-9	INSTRUMENT INSTL,WEDGELIT	NP	8
	50-384024-15	. INDICATOR,AIRSPEED	1	1
	50-384024-41	. INDICATOR,AIRSPEED	1	9
	50-384024-49	. INDICATOR,AIRSPEED	1	10
	50-384024-19	. INDICATOR,AIRSPEED	1	11
	58-380010-5	. INDICATOR,AIRSPEED/WEDGELIT/	1	12
- 1	58-380010-1	. INDICATOR,AIRSPEED/WEDGELIT/	1	13
	96-324035-61	. ALTIMETER/STD CAL/	1	1
	58-380045-1	. ALTIMETER/STD CAL/	1	14
	58-380041-1	. ALTIMETER/STD CAL/	1	15
- 2	58-380041-3	. ALTIMETER	1	16
	50-380094-9	. ALTIMETER	1	23
	95-324035-65	. INDICATOR,RATE OF CLIMB	1	1
	35-380044-1	. INDICATOR,RATE OF CLIMB	1	17
- 3	50-384073	. INDICATOR,RATE OF CLIMB	1	18
	96-324033-23	. INDICATOR,RATE OF CLIMB	1	19
	35-380019-1	. INDICATOR,OUTSIDE AIR TEMPERATURE	1	20
	35-380019-3	. INDICATOR,OUTSIDE AIR TEMPERATURE	1	21
- 4	35-380019-5	. INDICATOR,OUTSIDE AIR TEMPERATURE	1	22

CODES OF EFFECTIVITY

1 TC-1 THRU TC-190
2 TC-191 THRU TC-1607
3 TC-502 THRU TC-1607
4 TE-1 THRU TE-451
5 TE-452 THRU TE-942 EXCEPT TE-938
6 TC-191 THRU TC-501
7 TC-502 THRU TC-1607 TE-1 THRU TE-767
8 TE-768 THRU TE-942 EXCEPT TE-938
9 TC-191 THRU TC-954
10 TC-955 THRU TC-1607
11 TE-1 THRU TE-942 EXCEPT TE-938
12 TC-1299 THRU TC-1607
13 TE-768 THRU TE-942 EXCEPT TE-938
14 TC-1 THRU TC-1004 TE-1 THRU TE-451
15 TC-1005 THRU TC-1607 TE-452 THRU TE-942 EXCEPT TE-938
16 TC-1299 THRU TC-1607 TE-768 THRU TE-942 EXCEPT TE-938
17 TC-191 THRU TC-779
18 TC-780 THRU TC-940 TC-1157 THRU TC-1607 TE-1 THRU TE-942 EXCEPT TE-938
19 TC-941 THRU TC-1156
20 TC-1 THRU TC-569
21 TC-570 THRU TC-1042 TE-1 THRU TE-451
22 TC-1043 THRU TC-1607 TE-452 THRU TE-942 EXCEPT TE-938
23 TE-452 THRU TE-767

"END"

CHAPTER 35

OXYGEN

LIST OF PAGES & TABLE OF CONTENTS FOR CHAPTER 35-00-00 OXYGEN

CHAP/SUB-SECT & UNIT	PAGE NO.	EFFECTIVE DATE	TABLE OF CONTENTS
35-00-00	1	04/05/85	LIST OF PAGES & TABLE OF CONTENTS
35-00-01	1	03/10/78	OXYGEN STORAGE/NOSE BAGGAGE/
35-00-01	2	03/10/78	
35-00-01	3	04/05/85	
35-00-05	1	03/10/78	OXYGEN STORAGE/AFT BAGGAGE/
35-00-05	2	03/10/78	
35-00-05	3	03/10/78	
35-00-20	1	03/10/78	OXYGEN SYSTEM INSTALLATION
35-00-20	2	03/10/78	TC-1 THRU TC-357
35-00-20	3	03/10/78	
35-00-21	1	03/10/78	OXYGEN SYSTEM INSTALLATION
35-00-21	2	03/10/78	TC-358 THRU TC-954
35-00-21	3	03/10/78	
35-00-21	4	03/10/78	
35-00-21	5	03/10/78	
35-00-22	1	03/10/78	OXYGEN SYSTEM INSTALLATION
35-00-22	2	03/10/78	TC-358 THRU TC-1029,TE-1 THRU TE-344
35-00-22	3	03/10/78	
35-00-22	4	03/10/78	
35-00-22	5	03/10/78	
35-00-22	6	03/10/78	
35-00-22	7	03/10/78	
35-00-23	1	03/10/78	OXYGEN SYSTEM INSTALLATION
35-00-23	2	03/10/78	TC-1030 THRU TE-1607,TE-345 THRU TE-767
35-00-23	3	03/10/78	
35-00-23	4	03/10/78	
35-00-23	5	03/10/78	
35-00-24	1	03/10/78	OXYGEN SYSTEM INSTALLATION
35-00-24	2	03/10/78	TE-768 THRU TE-942 EXCEPT TE-938
35-00-24	3	03/10/78	
35-00-24	4	03/10/78	
35-00-24	5	04/05/85	

35-00-01
OXYGEN STORAGE/NOSE BAGGAGE/

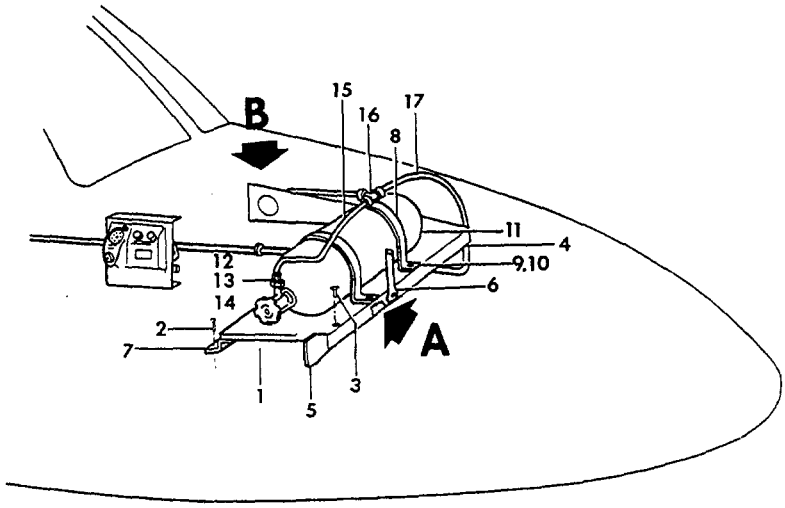

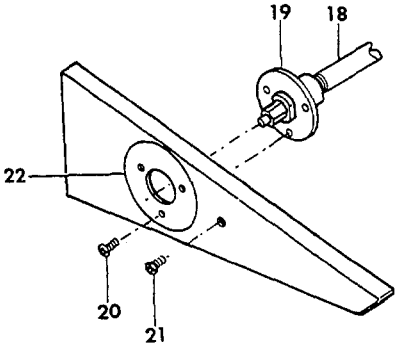

VIEW A

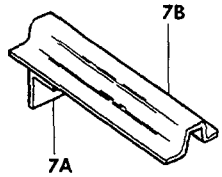

VIEW B

55-341-27

FIGURE 00-01. OXYGEN STORAGE/NOSE BAGGAGE/

SUB-SECT UNIT & ITEM NO.	PART NO.	DESCRIPTION 1 2 3 4 5 6 7	UNITS PER ASSY	USABLE ON CODE
00-01	96-560002	OXYGEN SYSTEM INSTL,NOSE BAGGAGE.	NP	2
	96-560004	OXYGEN SYSTEM INSTL,NOSE BAGGAGE.	NP	3
- 1	95-344056-1	. SHELF,OXYGEN BOTTLE MTG	1	1
		/ATTACHING PARTS/		
- 2	AN520-10	. SCREW	12	
	AN960-10	. WASHER.	12	
- 3	AN525-10	. SCREW	15	
	AN365-1032	. NUT	15	
		----*----		
- 4	95-344056-9	. CHANNEL	1	1
- 5	95-344056-11	. GUSSET.	1	1
- 6	95-344056-37	. TUBE.	1	1
- 7	95-344056-15	. ZEE	1	1
- 7A	58-560011-43	. ANGLE	1	1
- 7B	58-560011-45	. SUPPORT,BOTTLE.	2	1
- 8	18-300002	. BRACKET,BOTTLE MOUNTING	2	1
		/ATTACHING PARTS/		
	MS27039-1-14	. SCREW	1	
	AN525-10	. SCREW	1	
	AN3-4A	. BOLT.	1	
	AN960-10	. WASHER.	1	
	MS20365-1032	. NUT	1	
- 9	130171-SD10-04	. SLEEVE.	2	
- 10	130171PD10-2	. PLUG.	2	
		----*----		
- 11	18-300004-3	. BOTTLE,OXYGEN/38 CU FT/	1	1
	18-300004-1	. BOTTLE,OXYGEN/49 CU FT/	1	1
	ZC268-64-6	. BOTTLE,OXYGEN/65 CU FT/	1	1
- 12	8580	. COUPLING.	1	1
- 13	AN910-1	. COUPLING.	1	1
- 14	AN780-3	. NIPPLE.	1	1
- 15	96-560002-17	. TUBE ASSY,OXYGEN.	1	4
	96-560002-31	. TUBE ASSY,OXYGEN.	1	5
- 16	AN795-3	. TEE	1	1
- 17	96-560002-13	. TUBE ASSY,OXYGEN.	1	4
	96-560002-33	. TUBE ASSY,OXYGEN.	1	6
- 18	96-560002-29	. TUBE ASSY,FILLER.	1	5
	96-560002-15	. TUBE ASSY,FILLER.	1	4
- 19	18-300009-11	. VALVE,FILLER.	1	2
	26875-48	. VALVE,FILLER.	1	3
		/ATTACHING PARTS/		
- 20	AN520-10R5	. SCREW	3	
	AN960-10L	. WASHER.	3	
	MS20365-1032	. NUT	3	
- 21	AN515-4R4	. SCREW	1	
	AN960-4	. WASHER.	1	
	MS20365-440	. NUT	1	
		----*----		
- 22	96-560002-35	. PLACARD,OXYGEN RECHARGE	1	7
	96-560012	. PLACARD,OXYGEN RECHARGE	1	8

CODES OF EFFECTIVITY

1 TC-358 THRU TC-1607
TE-1 THRU TE-942
EXCEPT TE-938

2 TC-358 THRU TC-954

3 TC-955 THRU TC-1607
TE-1 THRU TE-942
EXCEPT TE-938

4 TC-358 THRU TC-870

5 TC-871 THRU TC-1607
TE-1 THRU TE-942
EXCEPT TE-938

6 TE-1 THRU TE-767

7 TC-358 THRU TC-1607

"END"

35-00-05
OXYGEN STORAGE/AFT BAGGAGE/

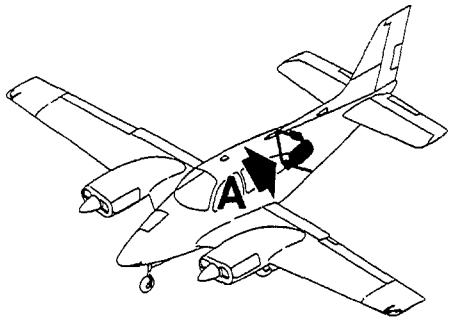

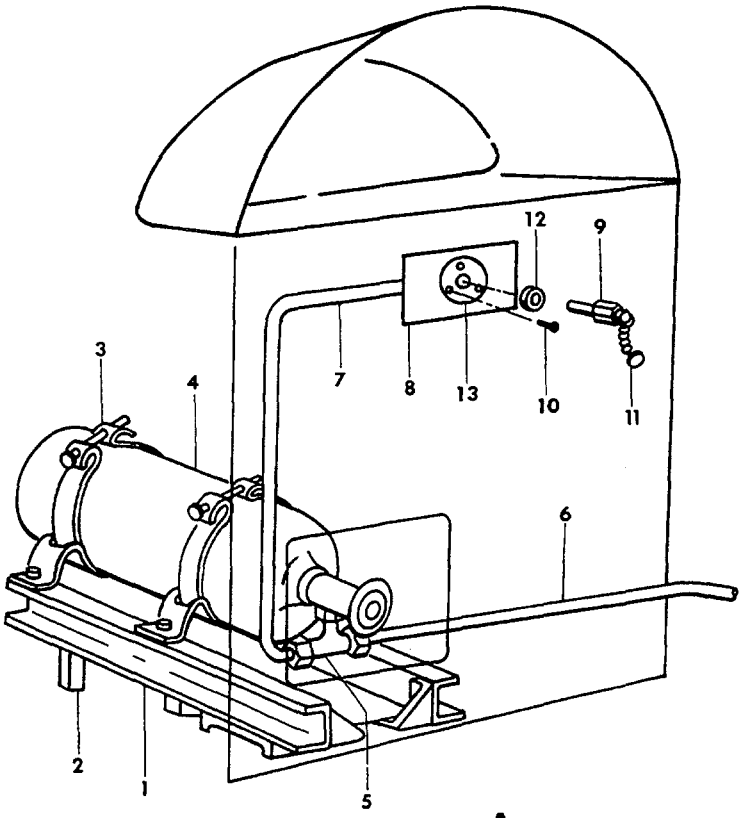

VIEW **A**

55-341-25

FIGURE 00-05.OXYGEN STORAGE/AFT BAGGAGE/

ATA CODE & INDEX NO.	PART NO.	DESCRIPTION 1 2 3 4 5 6 7	UNITS PER ASSY	USABLE ON CODE
00-05	96-560014	OXYGEN BOTTLE INSTL	NP	4
	96-560000	OXYGEN SYSTEM INSTL	NP	2
	96-560001	OXYGEN SYSTEM INSTL	NP	3
- 1	96-560000-3	. BRACKET,BOTTLE MOUNTING LH.	1	1
	96-560000-4	. BRACKET,BOTTLE MOUNTING RH.	1	1
- 2	96-560000-5	. CHANNEL	1	1
- 3	18-300002	. BRACKET,BOTTLE CLAMP.	1	1
		/ATTACHING PARTS/		
	AN3A	. BOLT.	2	
	AN960-10-10	. WASHER.	2	
		----*----		
- 4	18-300004-3	. BOTTLE,OXYGEN/38.4 CU FT/	1	6
	18-300004-1	. BOTTLE,OXYGEN/48.3 CU FT/	1	6
	18-300004	. BOTTLE,OXYGEN	1	5
- 5	18-300009-21	. TEE	1	1
- 6	96-560001-53	. TUBE ASSY,OXYGEN.	1	1
- 7	96-560001-49	. TUBE ASSY,FILLER.	1	1
- 8	96-560001-51	. DOUBLER	1	1
	AN6011-18	. GAGE,OXYGEN	1	5
	96-560000-23	. TUBE ASSY,OXYGEN GAGE	1	5
- 9	18-300009-11	. FILLER.	1	1
		/ATTACHING PARTS/		
- 10	AN520-10R	. SCREW	3	
- 11	AN515-440	. SCREW	1	
	AN960-10L	. WASHER.	3	
	AN960-4	. WASHER.	1	
	MS20365-1032	. NUT	3	
	MS20365-440	. NUT	1	
		----*----		
- 12	10095100020WH	. WASHER.	1	1
- 13	50-560015	. PLACARD	1	1

CODES OF EFFECTIVITY

1	TC-1 THRU TC-954	2	TC-1 THRU TC-190
3	TC-191 THRU TC-954	4	TE-211 THRU TE-767
5	TC-1 THRU TC-357	6	TC-358 THRU TC-954

"END"

35-00-20
OXYGEN SYSTEM INSTALLATION
TC-1 THRU TC-357

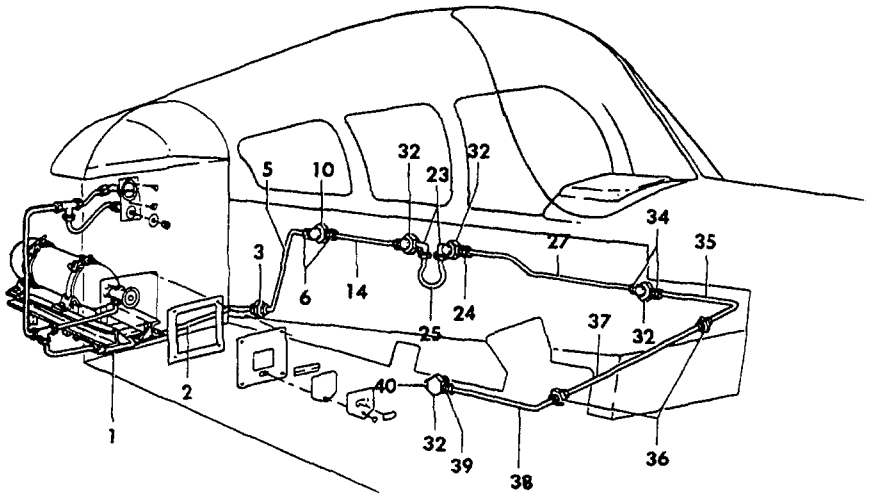

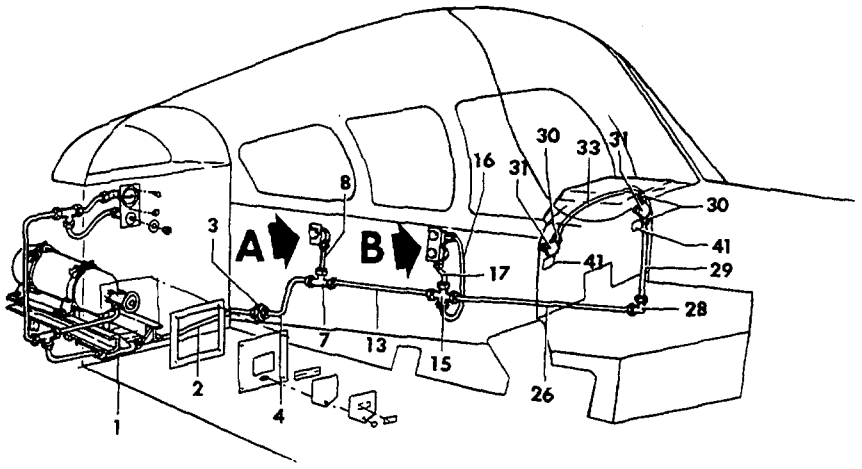

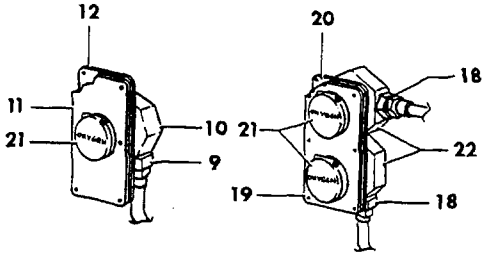

VIEW A VIEW B

55-341-26

FIGURE 00-20. OXYGEN SYSTEM INSTALLATION

ATA CODE & INDEX NO.	PART NO.	DESCRIPTION 1 2 3 4 5 6 7	UNITS PER ASSY	USABLE ON CODE
00-20	96-560000	OXYGEN SYSTEM INSTL/38.4 CU FT/	NP	1
	96-560000-1	OXYGEN SYSTEM INSTL/48.3 CU FT/	NP	1
	96-560001	OXYGEN SYSTEM INSTL/38.4 CU FT/	NP	2
	96-560001-1	OXYGEN SYSTEM INSTL/48.3 CU FT/	NP	2
- 1	A-2000	. REGULATOR,OXYGEN.	1	3
		/ATTACHING PARTS/		
	AN520R10	. SCREW	4	
	AN960-10	. WASHER.	4	
	AN365-1032	. NUT	4	
		——*——		
- 2	96-560000-43	. TUBE ASSY	1	3
- 3	AN815-5D	. UNION	1	3
- 4	96-560000-47	. TUBE ASSY	1	1
- 5	96-560001-7	. TUBE ASSY	1	2
- 6	AN816-5D	. UNION	2	2
- 7	AN824-5D	. TEE	1	1
- 8	96-560000-51	. TUBE ASSY	1	1
- 9	AN816-5D	. UNION	1	1
- 10	18-300008	. VALVE,OUTLET/SUPERSEDES Z651.	1	3
	AN913-1D	. PLUG.	1	1
- 11	96-560000-79	. PLATE,FACE.	1	1
- 12	96-560000-77	. DOUBLER	1	1
- 13	96-560000-55	. TUBE ASSY	1	1
- 14	96-560001-9	. TUBE ASSY	1	2
- 15	AN827-5D	. CROSS	1	1
- 16	96-560000-63	. TUBE ASSY	1	1
- 17	96-560000-59	. TUBE ASSY	1	1
- 18	AN816-5D	. UNION	2	1
	AN913-1D	. PLUG.	2	1
- 19	96-560000-75	. FACE.	1	1
- 20	96-560000-73	. DOUBLER	1	1
- 21	50-560012	. PLACARD,OXYGEN.	5	3
- 22	18-300008	. VALVE,OUTLET/SUPERSEDES Z651/	2	3
- 23	AN822-5D	. ELBOW	2	2
- 24	AN816-5D	. UNION	2	2
- 25	96-560001-11	. TUBE ASSY	2	2
- 26	96-560000-67	. TUBE ASSY	1	1
- 27	96-560001-13	. TUBE ASSY	1	2
- 28	AN821-5D	. ELBOW	1	1
- 29	AN6039-5-24	. HOSE ASSY	1	1
- 30	AN822-5D	. UNION	3	1
- 31	18-300008-3	. VALVE,OUTLET/SUPERSEDES Z651A/.	1	1
- 32	18-300008	. VALVE,OUTLET/SUPERSEDES Z651/	1	1
- 33	96-560000-71	. TUBE ASSY	1	1
- 34	AN816-5D	. UNION	2	2
- 35	96-560001-19	. TUBE ASSY	1	2
- 36	AN815-5D	. UNION	2	2
- 37	96-560001-15	. TUBE ASSY	1	2
- 38	96-560001-17	. TUBE ASSY	1	2
- 39	AN816-5D	. UNION	1	2
- 40	AN931-1D	. PLUG.	1	2
	AN931-5-13	. GROMMET	AR	3
- 41	50-534288	. PLACARD,OXYGEN.	2	3

CODES OF EFFECTIVITY

1 TC-1 THRU TC-190 2 TC-191 THRU TC-357
3 TC-1 THRU TC-357

"END"

35-00-21
OXYGEN SYSTEM INSTALLATION
TC-358 THRU TC-954

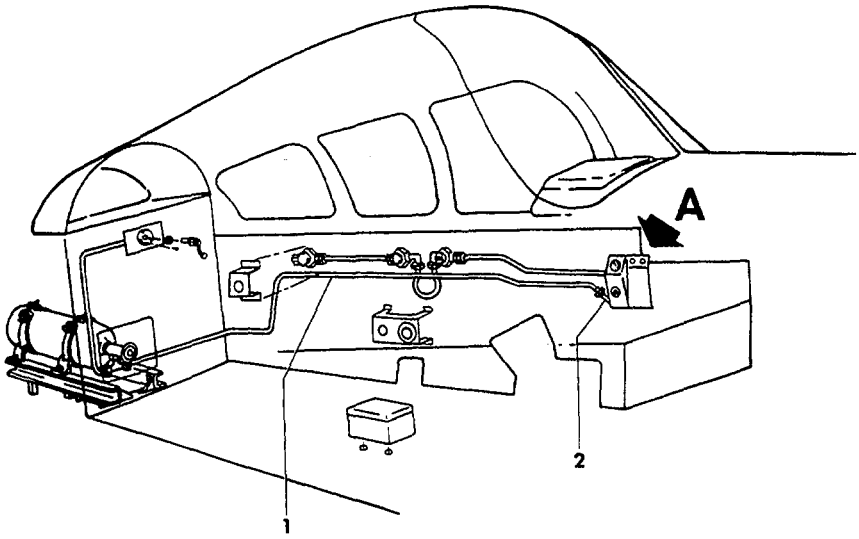

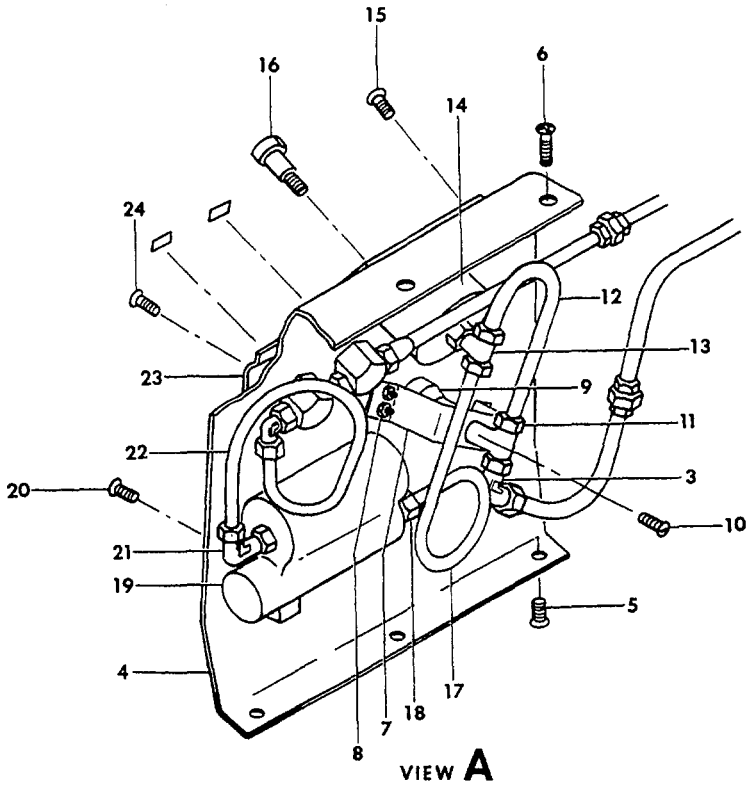

55-341-5

FIGURE 00-21.OXYGEN SYSTEM INSTALLATION
/SHEET 1 OF 2 SHEETS/

ATA CODE & INDEX NO.	PART NO.	DESCRIPTION 1 2 3 4 5 6 7	UNITS PER ASSY	USABLE ON CODE
00-21	96-560001-71	OXYGEN SYSTEM INSTL,4 OUTLET/38.4 CU. FT/ . . .	NP	1
	96-560001-65	OXYGEN SYSTEM INSTL,4 OUTLET/48.3 CU. FT/ . . .	NP	1
	96-560001-69	OXYGEN SYSTEM INSTL,5 OUTLET/38.4 CU. FT/ . . .	NP	1
	96-560001-31	OXYGEN SYSTEM INSTL,5 OUTLET/48.3 CU. FT/ . . .	NP	1
	96-560001-67	OXYGEN SYSTEM INSTL,6 OUTLET/38.4 CU. FT/ . . .	NP	1
	96-560001-33	OXYGEN SYSTEM INSTL,6 OUTLET/48.3 CU. FT/ . . .	NP	1
- 1	96-560001-53	. TUBE ASSY,OXYGEN.	1	1
- 2	96-560001-75	. TUBE ASSY,OXYGEN.	1	1
- 3	AN790-3	. ELBOW	1	1
- 4	96-560001-35	. ESCUTCHEON.	1	1
		/ATTACHING PARTS/		
- 5	6 TYPE A	. SCREW	3	
- 6	AN530-6R8	. SCREW	3	
	A1793-6Z3	. NUT	3	
		——*——		
- 7	96-560001-39	. BRACKET,VALVE MOUNTING.	1	2
	96-560002-25	. BRACKET,VALVE MOUNTING.	1	3
		/ATTACHING PARTS/		
- 8	AN507-632R5	. SCREW	4	
	AN960-6L	. WASHER.	4	
	H10-06	. NUT	4	
		——*——		
- 9	AN6012-1A	. VALVE,REGULATOR	1	1
		/ATTACHING PARTS/		
- 10	AN515-6R6	. SCREW	2	
	AN960-6L	. WASHER.	2	
		——*——		
- 11	AN780-3	. NIPPLE.	1	1
- 12	96-560001-41	. TUBE ASSY,OXYGEN.	1	2
	96-560002-21	. TUBE ASSY,OXYGEN.	1	3
- 13	72F	. TEE	1	1
- 14	50-384046	. INDICATOR	1	1
		/ATTACHING PARTS/		
- 15	AN507-632R10	. SCREW	3	
	NAS487-20	. NUT	3	
		——*——		
- 16	A8970-1-327	. POST LIGHT.	1	1
- 17	96-560001-77	. TUBE ASSY,OXYGEN.	1	2
	96-560002-19	. TUBE ASSY,OXYGEN.	1	3
	96-560002-23	. TUBE ASSY,OXYGEN.	1	3
- 18	AN780-3	. NIPPLE.	1	1
- 19	18-300009-23	. REGULATOR ASSY.	1	1
		/ATTACHING PARTS/		
- 20	AN509-416R8	. SCREW	2	
	AN509-416R6	. SCREW	1	
	AN960-416	. WASHER.	2	
		——*——		
- 21	MS20822-51	. ELBOW	1	1
- 22	96-560001-45	. TUBE ASSY.OXYGEN.	1	1
- 23	96-560001-37	. SUPPORT,OUTLET.	1	1
		/ATTACHING PARTS/		
- 24	AN507-632R5	. SCREW	4	
	AN960-6L	. WASHER.	4	
	H10-06	. NUT	4	
		——*——		

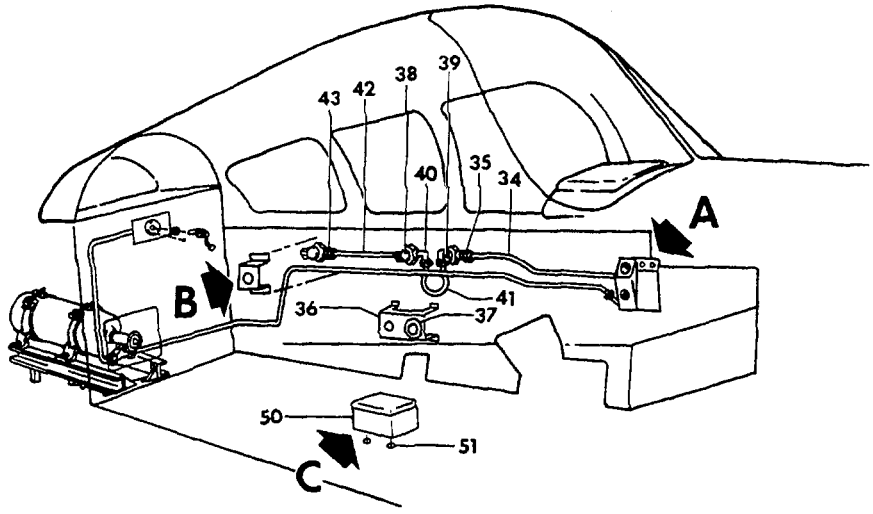

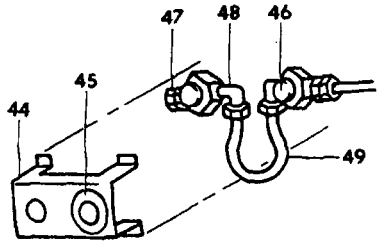

VIEW B

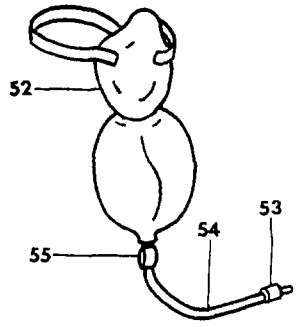

VIEW C

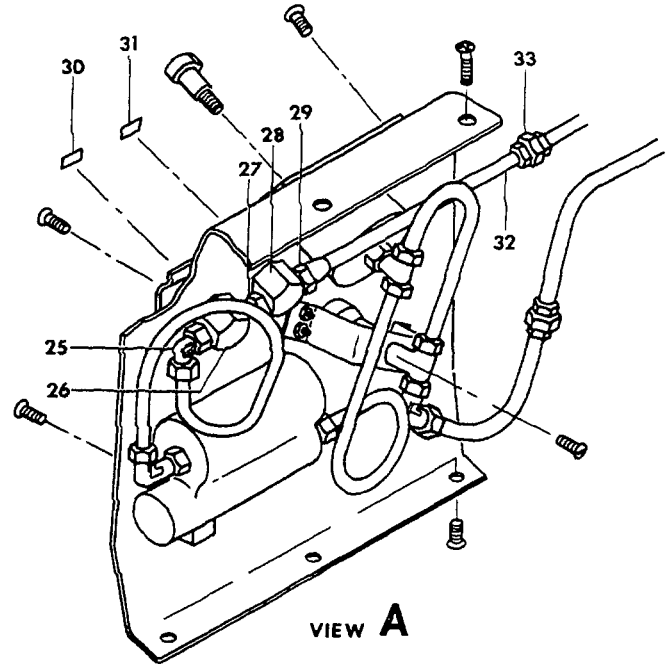

VIEW A

55-341-6

FIGURE 00-21.OXYGEN SYSTEM INSTALLATION
/SHEET 2 OF 2 SHEETS/

ATA CODE & INDEX NO.	PART NO.	DESCRIPTION 1 2 3 4 5 6 7	UNITS PER ASSY	USABLE ON CODE
00-21 - 25	MS20822-5D	. ELBOW	1	1
- 26	18-300009-29	. OUTLET,PILOT OXYGEN	1	1
- 27	AN911-1D	. NIPPLE	1	1
- 28	18-300009-31	. OUTLET,CO-PILOT OXYGEN	1	1
- 29	AN823-5D	. NIPPLE	1	1
- 30	96-560011-1	. PLACARD,PILOT OXYGEN	1	1
- 31	96-560011-3	. PLACARD,CO-PILOT OXYGEN	1	1
- 32	96-560001-75	. TUBE ASSY,OXYGEN	1	1
- 33	AN815-5D	. UNION	1	1
- 34	96-560001-47	. TUBE ASSY,OXYGEN	1	1
- 35	AN816-5D	. UNION	1	1
- 36	96-560001-3	. BRACKET,OXYGEN OUTLET	1	1
- 37	50-534363	. ESCUTCHEON	1	1
- 38	18-300009-31	. OUTLET,OXYGEN	2	1
- 39	50-560012	. PLACARD,OXYGEN	2	1
- 40	AN822-5D	. ELBOW	2	1
- 41	96-560001-11	. TUBE ASSY,OXYGEN	1	1
- 42	96-560001-9	. TUBE ASSY,OXYGEN/5 OUTLET ONLY/	1	1
	96-560001-61	. TUBE ASSY,OXYGEN/6 OUTLET ONLY/	1	1
	AN931-1D	. PLUG/4 OUTLET ONLY/	1	1
- 43	AN816-5D	. UNION	1	1
- 44	96-560001-3	. BRACKET,OXYGEN OUTLET/6 OUTLET ONLY/	1	1
	96-560001-5	. BRACKET,OXYGEN OUTLET/5 OUTLET ONLY/	1	1
- 45	50-534363	. ESCUTCHEON/6 OUTLET ONLY/	2	1
	50-534363	. ESCUTCHEON/5 OUTLET ONLY/	1	1
- 46	18-300009-31	. OUTLET,OXYGEN/6 OUTLET ONLY/	2	1
	18-300009-31	. OUTLET,OXYGEN/5 OUTLET ONLY/	1	1
- 47	AN931-1D	. PLUG	1	1
- 48	AN822-5D	. ELBOW/6 OUTLET ONLY/	2	1
- 49	96-560001-11	. TUBE ASSY,OXYGEN/6 OUTLET ONLY/	1	1
- 50	96-560001-59	. BOX ASSY,OXYGEN MASK STORAGE	1	1
- 51	AN227-6B	. BUTTON	2	1
	AN227-7B	. SOCKET	2	1
	18-300009-27	. MASK ASSY,OXYGEN	AR	1
- 52	18-300001	. . MASK	1	1
- 53	ZF454	. . CONNECTOR,PLUG-IN	1	1
- 54	OT536	. . HOSE	1	1
- 55	ZV852	. . FLOWMETER	1	1

CODES OF EFFECTIVITY

1 TC-358 THRU TC-954 2 TC-358 THRU TC-860
3 TC-861 THRU TC-954

"END"

35-00-22
OXYGEN SYSTEM INSTALLATION
TC-358 THRU TC-1029,TE-1 THRU TE-344

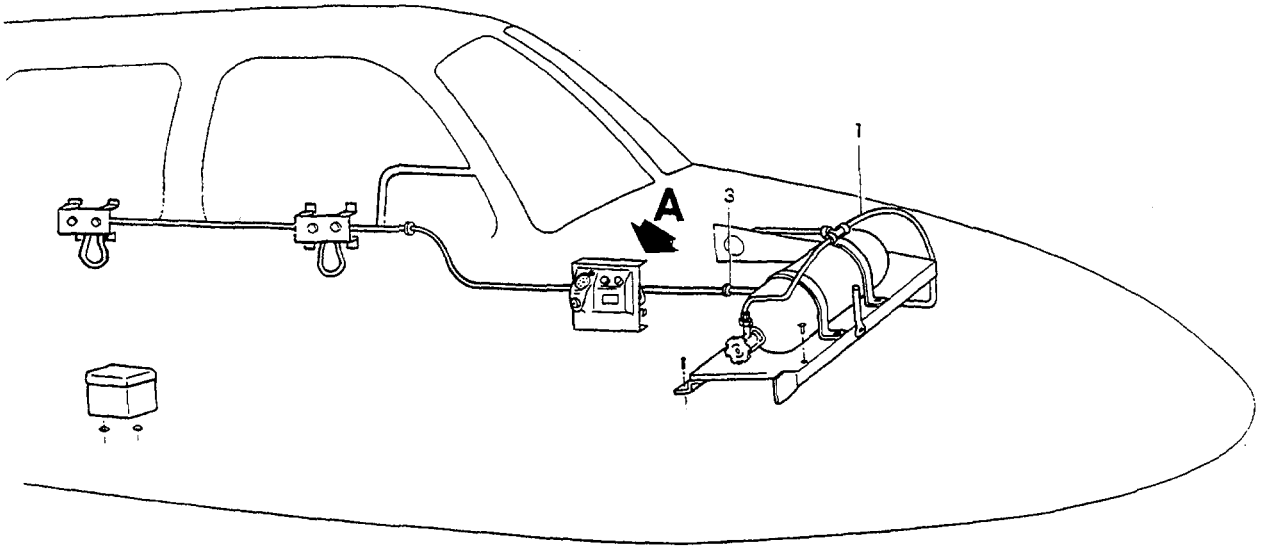

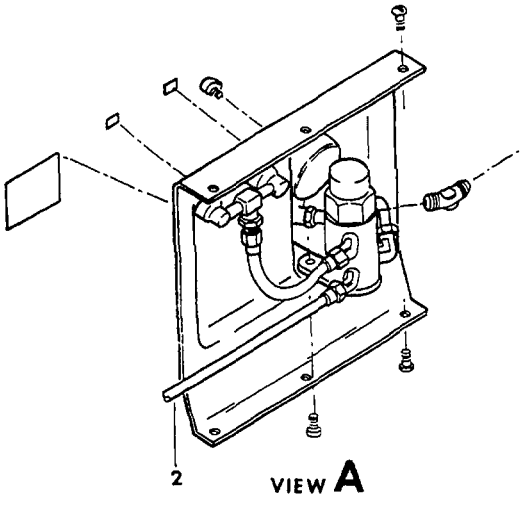

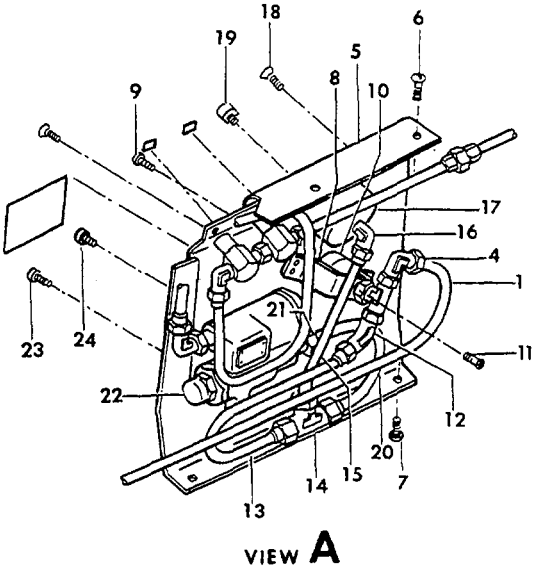

55-341-28

FIGURE 00-22.OXYGEN SYSTEM INSTALLATION
/SHEET 1 OF 3 SHEETS/

ATA CODE & INDEX NO.	PART NO.	DESCRIPTION 1 2 3 4 5 6 7	UNITS PER ASSY	USABLE ON CODE
00-22	96-560002-1	OXYGEN SYSTEM INSTL,4 OUTLETS/38 CU. FT/. . . .	NP	1
	96-560002-7	OXYGEN SYSTEM INSTL,4 OUTLETS/48 CU. FT/. . . .	NP	1
	96-560004-7	OXYGEN SYSTEM INSTL,4 OUTLETS/38 CU. FT/. . . .	NP	2
	96-560004-1	OXYGEN SYSTEM INSTL,4 OUTLETS/48 CU. FT/. . . .	NP	2
	96-560002-3	OXYGEN SYSTEM INSTL,5 OUTLETS/38 CU. FT/. . . .	NP	1
	96-560002-9	OXYGEN SYSTEM INSTL,5 OUTLETS/48 CU FT/	NP	1
	96-560004-9	OXYGEN SYSTEM INSTL,5 OUTLETS/38 CU. FT/. . . .	NP	2
	96-560004-3	OXYGEN SYSTEM INSTL,5 OUTLETS/48 CU. FT/. . . .	NP	2
	96-560002-5	OXYGEN SYSTEM INSTL,6 OUTLETS/38 CU. FT/. . . .	NP	1
	96-560002-11	OXYGEN SYSTEM INSTL,6 OUTLETS/48 CU. FT/. . . .	NP	1
	96-560004-11	OXYGEN SYSTEM INSTL,6 OUTLETS/38 CU. FT/. . . .	NP	2
	96-560004-5	OXYGEN SYSTEM INSTL,6 OUTLETS/48 CU. FT/. . . .	NP	2
	96-560002-13	. TUBE ASSY,OXYGEN.	1	3
- 1	96-560002-33	. TUBE ASSY,OXYGEN.	1	4
- 2	96-560004-25	. TUBE ASSY,OXYGEN.	1	2
- 3	MS35489-4	. GROMMET	2	5
	96-560002-601	. CONSOLE ASSY,OXYGEN	1	1
- 4	AN790-3	. . ELBOW	1	1
- 5	96-560001-35	. . ESCUTCHEON.	1	1
		/ATTACHING PARTS/		
- 6	AN530-6R8	. . SCREW	3	
	A1793-6Z3	. . NUT,TYPE E.	3	
- 7	PK84XA6-6	. . SCREW	3	
		----*----		
- 8	96-560001-39	. . BRACKET,VALVE MOUNTING.	1	1
		/ATTACHING PARTS/		
- 9	AN507-632R5	. . SCREW	4	
	AN960-6L	. . WASHER.	4	
	MS20365-632	. . NUT	4	
		----*----		
- 10	AN6012-1A	. . VALVE,OXYGEN REGULATOR.	1	1
		/ATTACHING PARTS/		
- 11	PK74XZ8-4	. . SCREW/USE WITH KEROTEST VALVE/.	3	
	AN515-8R7	. . SCREW/USE WITH SUPERIOR VALVE/.	2	
	AN936A8	. . WASHER.	AR	
		----*----		
- 12	AN791-3	. . ELBOW	1	1
- 13	96-560002-21	. . TUBE ASSY,OXYGEN.	1	1
- 14	AN795-3	. . TEE	1	1
- 15	96-560002-23	. . TUBE ASSY,OXYGEN.	1	1
- 16	AN790-3	. . ELBOW	1	1
- 17	50-384046	. . INDICATOR	1	1
		/ATTACHING PARTS/		
- 18	AN507-632R10	. . SCREW	3	
	NAS487-20	. . NUT	3	
		----*----		
- 19	A8970-1-327	. . LIGHT,POST.	1	1
- 20	96-560002-19	. . TUBE ASSY,OXYGEN.	1	1
- 21	AN780-3	. . NIPPLE.	1	1
- 22	18-300009-23	. . REGULATOR	1	1
		/ATTACHING PARTS/		
- 23	AN509-416R8	. . SCREW	1	
- 24	AN509-416R6	. . SCREW	2	
	AN960-416	. . WASHER.	4	
		----*----		

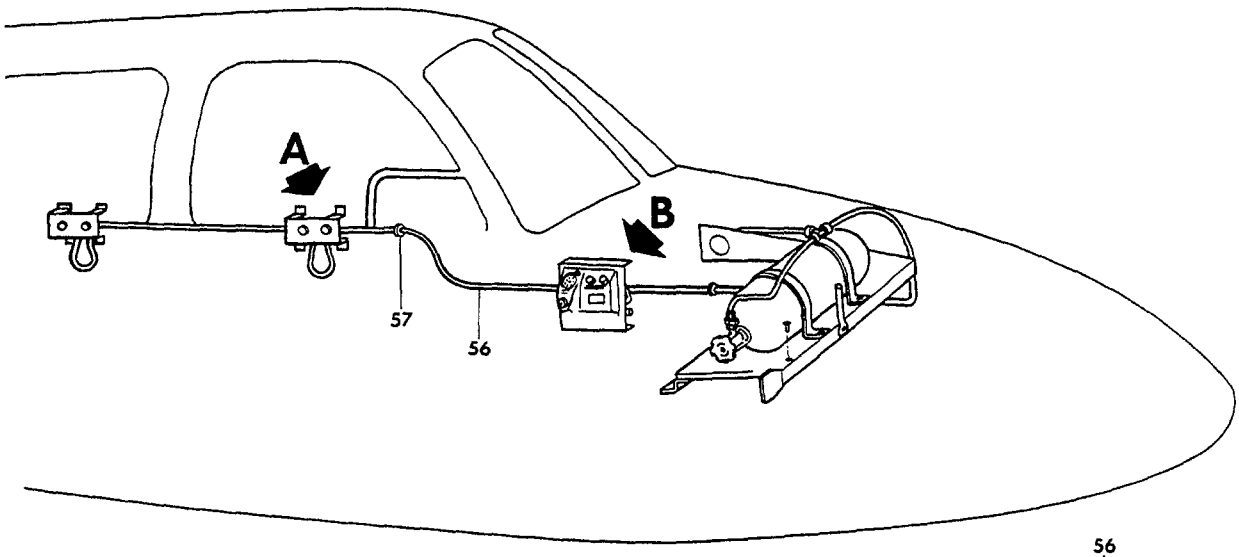

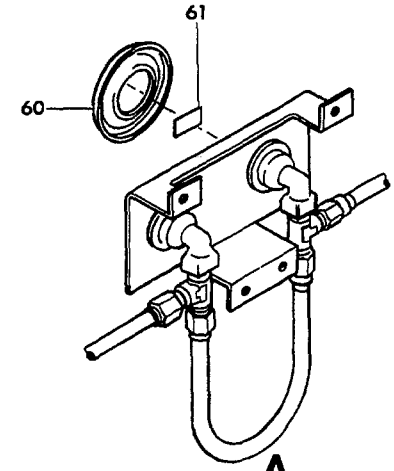

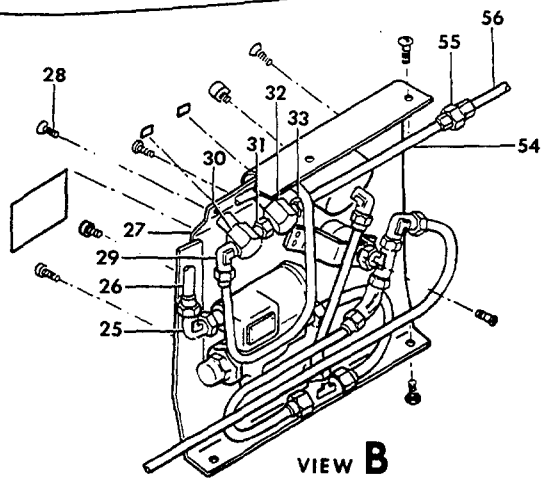

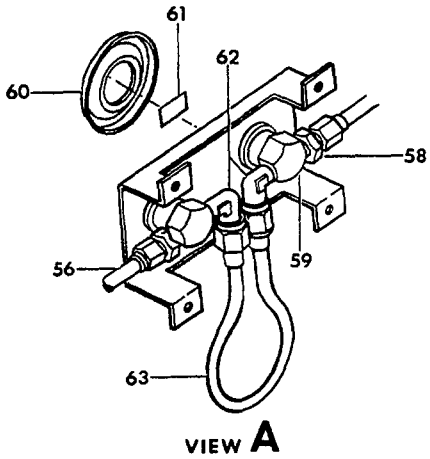

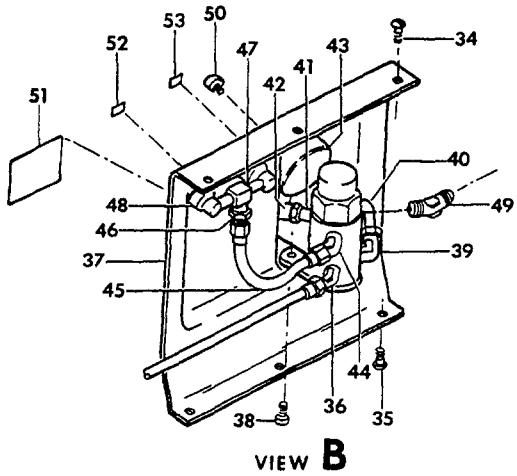

55-341-29

FIGURE 00-22.OXYGEN SYSTEM INSTALLATION
/SHEET 2 OF 3 SHEETS/

ATA CODE & INDEX NO.	PART NO.	DESCRIPTION 1 2 3 4 5 6 7	UNITS PER ASSY	USABLE ON CODE
00-22 - 25	MS20822-5D	. . ELBOW	1	1
- 26	96-560001-45	. . TUBE ASSY,OXYGEN.	1	1
- 27	96-560001-37	. . SUPPORT,OUTLET.	1	1
		/ATTACHING PARTS/		
- 28	AN507-632R5	. . SCREW	4	
	AN960-6L	. . WASHER.	4	
	MS20365-632	. . NUT	4	
		----*----		
- 29	MS20822-5D	. . ELBOW	1	1
- 30	18-300009-29	. . OUTLET,PILOT OXYGEN	1	1
- 31	AN911-1D	. . NIPPLE.	1	1
- 32	18-300009-31	. . OUTLET,CO-PILOT OXYGEN.	1	1
- 33	AN823-5D	. . ELBOW	1	1
	96-560021-601	. CONSOLE ASSY,OXYGEN	1	2
		/ATTACHING PARTS/		
- 34	AN530-6R8	. SCREW	3	
	A1793-6Z3	. NUT,TYPE E.	3	
- 35	PK84XZ6-6	. SCREW	3	
		----*----		
- 36	AN791-3	. . ELBOW	1	2
- 37	96-560021-1	. . ESCUTCHEON.	1	2
	800308	. . REGULATOR ASSY.	1	2
		/ATTACHING PARTS/		
- 38	AN507-632R	. . SCREW	3	
	AN960-68	. . WASHER.	3	
	MS20365-632	. . NUT	3	
		----*----		
- 39	200-2-2	. . ELBOW	1	2
- 40	96-560021-5	. . TUBE ASSY,OXYGEN.	1	2
- 41	5043-14	. . VALVE ASSY,RELIEF	1	2
- 42	200-8-2	. . ELBOW	1	2
- 43	800327-01	. . GAGE ASSY,OXYGEN PRESSURE	1	2
- 44	MS20823-4D	. . ELBOW	1	2
- 45	96-560021-3	. . TUBE ASSY,OXYGEN.	1	2
- 46	AN816-4D	. . NIPPLE.	1	2
- 47	PF3001-2	. . TEE	1	2
- 48	800316	. . OUTLET ASSY,OXYGEN.	2	2
- 49	MS20823-5D	. . ELBOW	1	2
- 50	A8970-1-327	. . LIGHT,POST.	1	2
- 51	50-534288	. PLACARD,INSTRUCTION/OXYGEN OUTLET PILOT/.	1	5
- 52	96-560011-1	. PLACARD,IDENTIFICATION/OXYGEN OUTLET PILOT/ .	1	5
- 53	96-560011-3	. PLACARD,IDENTIFICATION/OXYGEN OUTLET COPILOT/	1	5
- 54	96-560001-73	. TUBE ASSY,OXYGEN.	1	1
- 55	AN815-5D	. UNION	1	1
- 56	96-560001-47	. TUBE ASSY,OXYGEN.	1	1
	96-560004-23	. TUBE ASSY,OXYGEN.	1	2
- 57	MS35489-10	. GROMMET	6	5
- 58	AN816-5D	. NIPPLE.	3	1
	AN816-5D	. NIPPLE/5 OUTLET SYSTEM ONLY/.	1	2
	MS20913-1D	. PLUG.	1	1
- 59	18-300009-31	. OUTLET.	4	1
- 60	50-534363 C	. ESCUTCHEON.	4	6
	96-560004-31	. ESCUTCHEON.	4	7
- 61	50-560012	. PLACARD,IDENTIFICATION/OXYGEN OUTLET/	4	5
- 62	AN822-5D	. ELBOW	4	1
- 63	96-560001-11	. TUBE ASSY,OXYGEN.	2	1

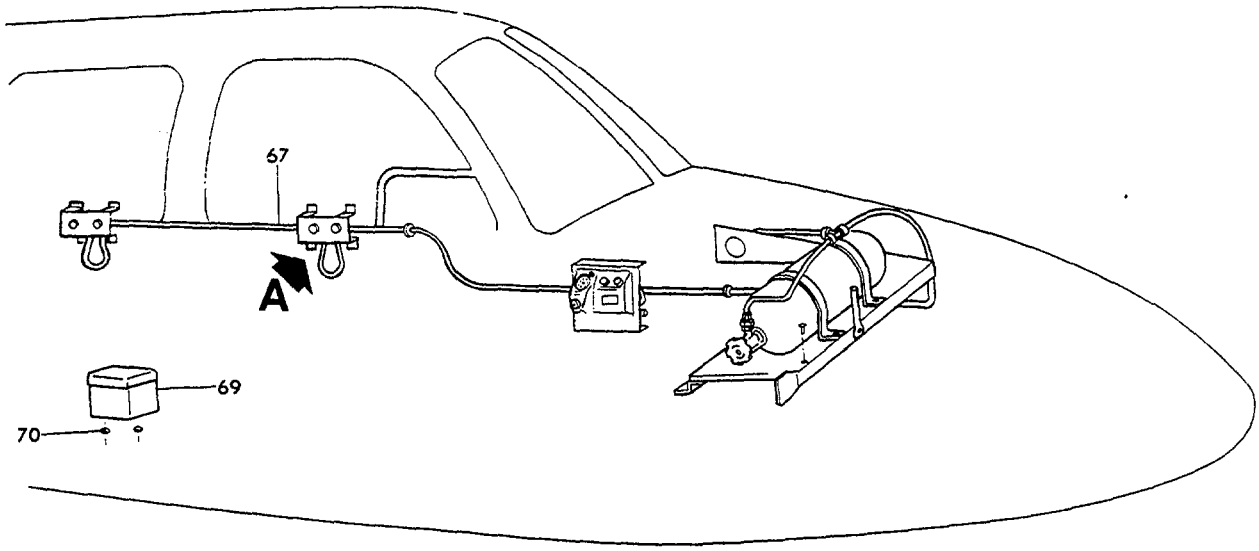

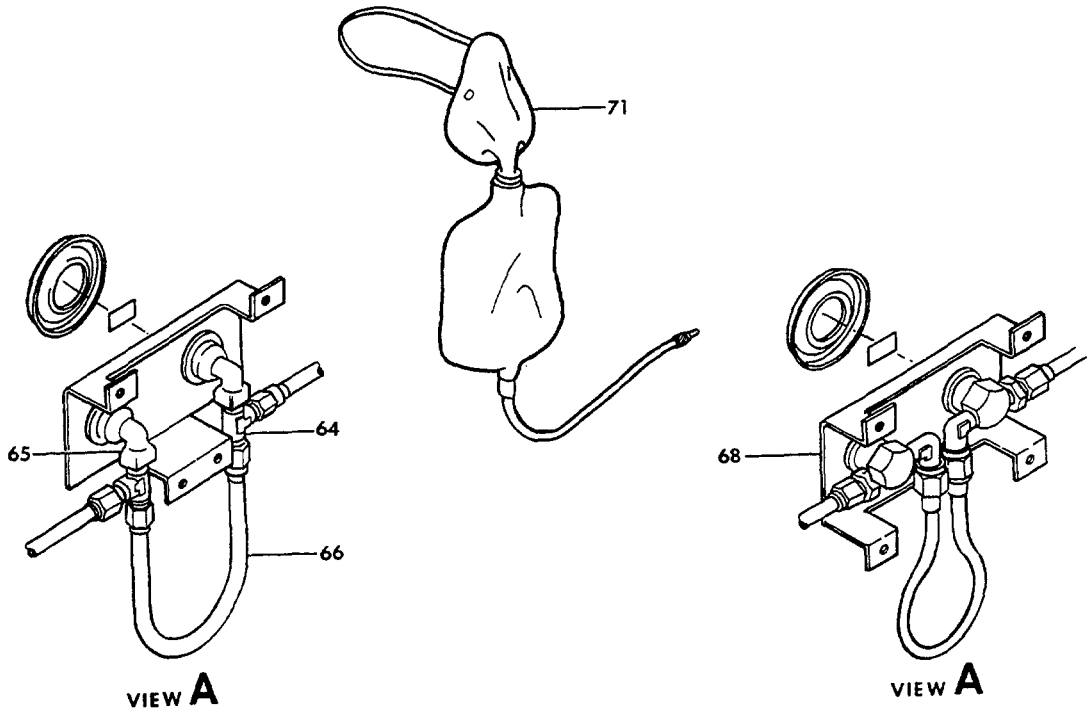

55-341-30

FIGURE 00-22.OXYGEN SYSTEM INSTALLATION
/SHEET 3 OF 3 SHEETS/

ATA CODE & INDEX NO.	PART NO.	DESCRIPTION 1 2 3 4 5 6 7	UNITS PER ASSY	USABLE ON CODE
00-22 - 64	MS20826-5D	TEE	4	2
- 65	800316	OUTLET	4	2
- 66	96-560004-21	TUBE ASSY,OXYGEN	2	2
- 67	96-560001-61	TUBE ASSY,OXYGEN/6 OUTLET SYSTEM ONLY/	1	1
	96-560004-19	TUBE ASSY,OXYGEN/6 OUTLET SYSTEM ONLY/	1	2
	96-560001-9	TUBE ASSY,OXYGEN/5 OUTLET SYSTEM ONLY/	1	1
	96-560004-17	TUBE ASSY,OXYGEN/5 OUTLET SYSTEM ONLY/	1	2
- 68	96-560001-3	BRACKET,OXYGEN OUTLET	2	1
	96-560004-15	BRACKET,OXYGEN OUTLET	2	2
	96-560001-5	BRACKET,OXYGEN OUTLET/5 OUTLET SYSTEM ONLY/	1	1
	96-560004-13	BRACKET,OXYGEN OUTLET/5 OUTLET SYSTEM ONLY/	1	2
- 69	96-560001-59	BOX ASSY,OXYGEN MASK STORAGE	1	5
		/ATTACHING PARTS/		
- 70	AN227-6B	BUTTON	2	
	AN227-7B	SOCKET	2	
		——*——		
- 71	800311	MASK ASSY,OXYGEN	6	2
	18-300009-27	MASK ASSY,OXYGEN	6	1

CODES OF EFFECTIVITY

1	TC-358 THRU TC-954	2	TC-955 THRU TC-1029 TE-1 THRU TE-344
3	TC-358 THRU TC-870	4	TC-871 THRU TC-1029 TE-1 THRU TE-344
5	TC-358 THRU TC-1029 TE-1 THRU TE-344	6	TC-358 THRU TC-1029
7	TE-1 THRU TE-344		

"END"

35-00-23
OXYGEN SYSTEM INSTALLATION
TC-1030 THRU TE-1607,TE-345 THRU TE-767

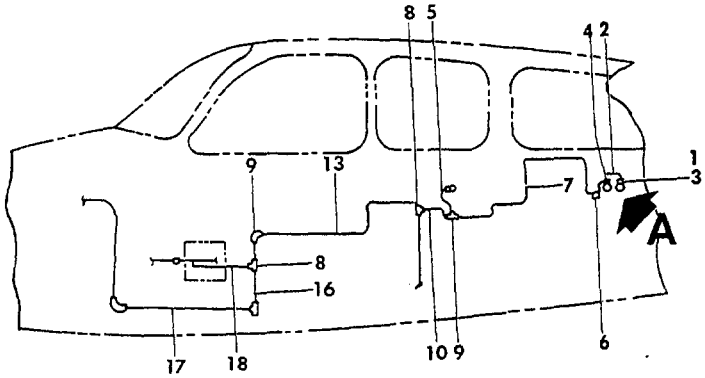

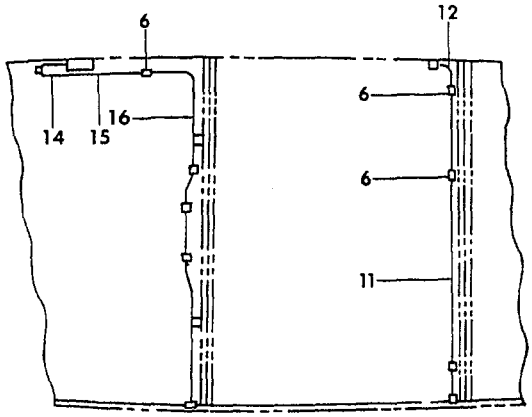

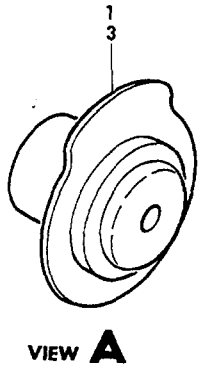

55-341-33

FIGURE 00-23. OXYGEN SYSTEM INSTALLATION
/SHEET 1 OF 2 SHEETS/

ATA CODE & INDEX NO.	PART NO.	DESCRIPTION 1 2 3 4 5 6 7	UNITS PER ASSY	USABLE ON CODE
00-23	35-560001-7	OXYGEN SYSTEM INSTL/6 OUTLET/	NP	1
	35-560001-15	OXYGEN SYSTEM INSTL/4 OUTLET/	NP	1
	35-560001-61	OXYGEN SYSTEM INSTL/5 OUTLET/	NP	1
- 1	23599-01	. OUTLET,OXYGEN	6	1
- 2	58-560000-89	. TUBE ASSY/6 OUTLET/	1	1
- 3	AN816-5D	. NIPPLE/6 OUTLET/	2	1
- 4	MS20826-5D	. TEE/6 OUTLET/	1	1
	MS20822-5D	. ELBOW/5 OUTLET	1	1
- 5	ZH691-8	. HOSE ASSY,OXYGEN	3	1
	37009-5-0080	. HOSE ASSY,OXYGEN/ALTERNATE FOR ZH691-8/	3	1
- 6	AN815-5D	. UNION	8	1
- 7	58-560000-79	. TUBE ASSY	1	1
- 8	ANX24-5D	. TEE	2	1
- 9	AN821-5D	. ELBOW	2	1
- 10	58-560000-81	. TUBE ASSY	1	1
- 11	35-560001-25	. TUBE ASSY	1	1
		/ATTACHING PARTS/		
	MS21919D65	. CLAMP	4	
	AN520-10R8	. SCREW	4	
	100696D-ZG016	. SPACER	4	
		----*----		
- 12	58-560000-91	. TUBE ASSY	1	1
- 13	58-560000-123	. TUBE ASSY	1	1
- 14	35-560001-49	. TUBE ASSY	1	1
- 15	35-560001-21	. TUBE ASSY	1	1
- 16	58-560000-125	. TUBE ASSY	2	1
- 17	58-560000-101	. TUBE ASSY	1	1
- 18	96-560022-13	. TUBE ASSY	1	1

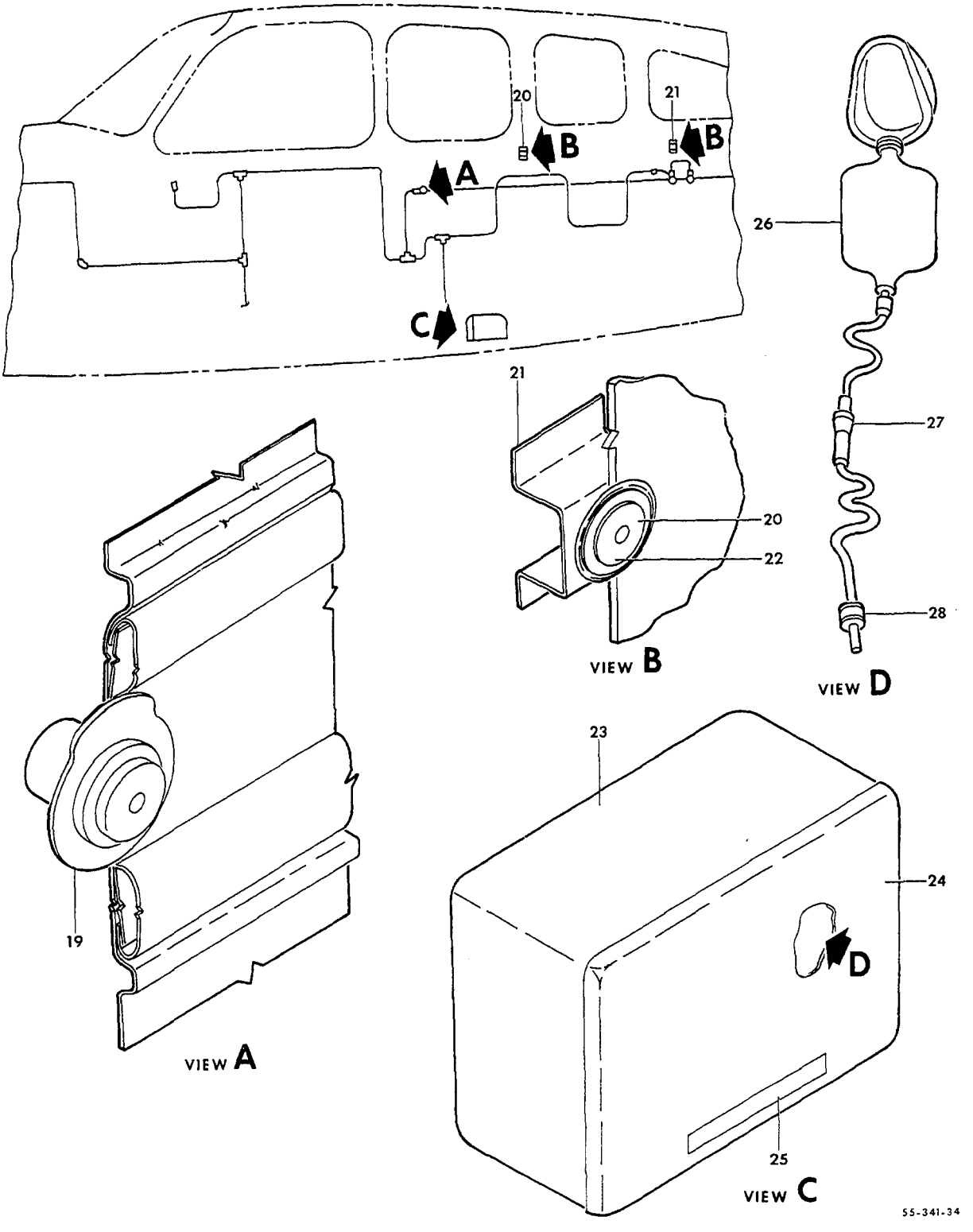

FIGURE 00-23. OXYGEN SYSTEM INSTALLATION
/SHEET 2 OF 2 SHEETS/

ATA CODE & INDEX NO.	PART NO.	DESCRIPTION 1 2 3 4 5 6 7	UNITS PER ASSY	USABLE ON CODE
00-23	23599-01	. OUTLET,OXYGEN	6	1
- 19	23719	. PLACARD,OXYGEN OUTLET	6	1
- 20	96-560004-31	. ESCUTCHEON,CO-PILOT OUTLET.	1	1
- 21	96-560004-13	. BRACKET	3	1
- 22	50-560012	. PLACARD,OXYGEN IDENTIFICATION	6	1
	58-560012-3	. BOX ASSY,OXYGEN MASK STOWAGE.	1	1
		/ATTACHING PARTS/		
	AN227-7B	. SOCKET.	2	
	AN227-6B	. BUTTON.	2	
		----*----		
- 23	58-560012-1	. . BOX,OXYGEN MASK STOWAGE	1	1
- 24	58-560012-5	. . COVER,OXYGEN MASK STOWAGE	1	1
	AN227-8B	. . STUD.	2	1
	AN227-9B	. . EYELET.	2	1
- 25	58-560013	. . PLACARD,OXYGEN MASK STOWAGE BOX	1	1
	801145-00	. MASK ASSY,PASSENGER OXYGEN.	5	1
	801144-01	. MASK ASSY,PILOT OXYGEN.	1	1
- 26	800717-00	. . MASK,PASSENGER OXYGEN	5	1
	800623-02	. . MASK,PILOT OXYGEN	1	1
	800777-02	. . . MICROPHONE ASSY,PILOT	1	1
- 27	8540	. . . INDICATOR,OXYGEN FLOW	6	1
- 28	8570	. . CONNECTOR,OXYGEN HOSE	6	1

CODES OF EFFECTIVITY

1 TC-1030 THRU TC-1607
TE-345 THRU TE-767

"END"

35-00-24
OXYGEN SYSTEM INSTALLATION
TE-768 THRU TE-942 EXCEPT TE-938

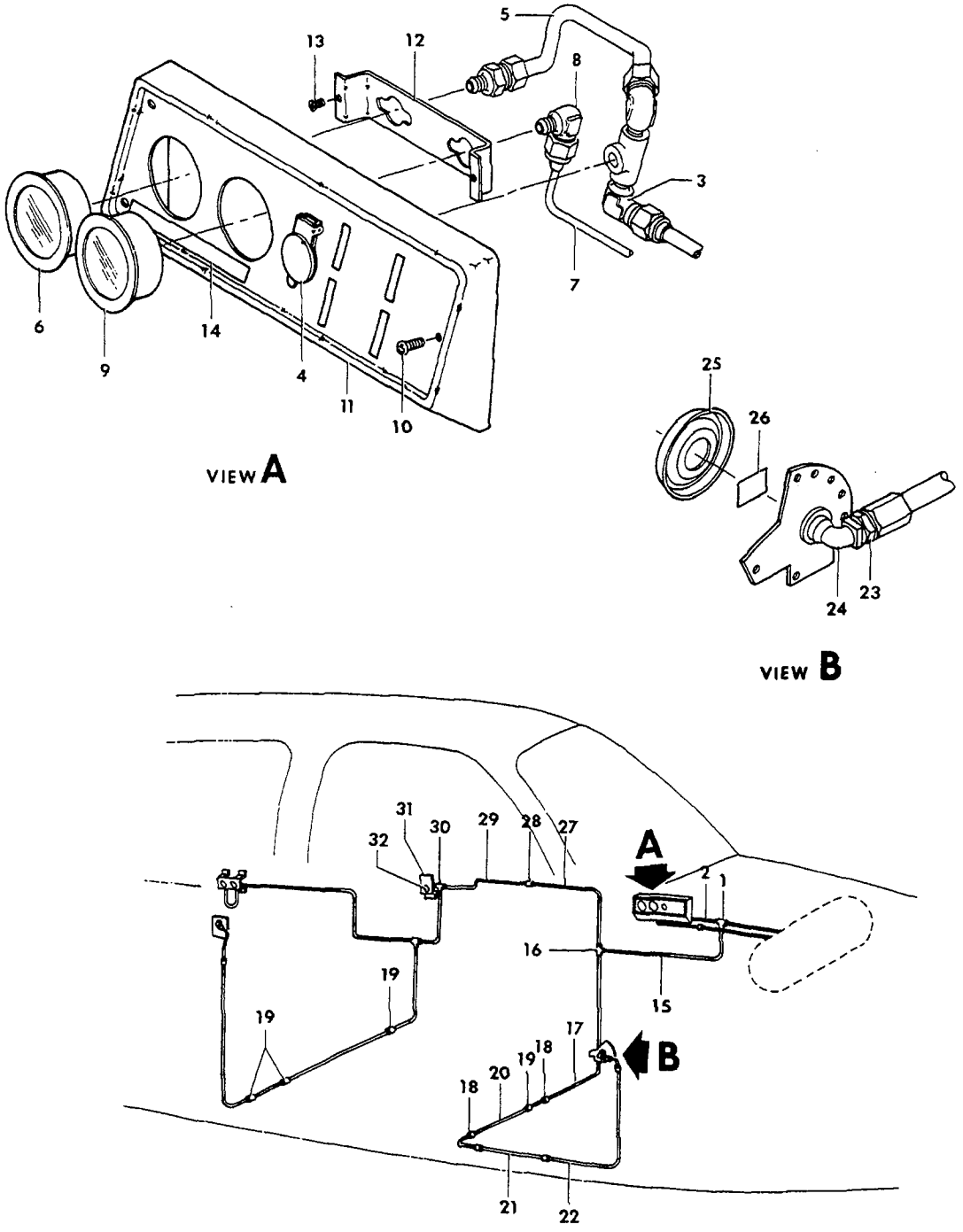

FIGURE 00-24.OXYGEN SYSTEM INSTALLATION
/SHEET 1 OF 2 SHEETS/

ATA CODE & INDEX NO.	PART NO.	DESCRIPTION 1 2 3 4 5 6 7	UNITS PER ASSY	USABLE ON CODE
00-24	58-560000-1	OXYGEN SYSTEM INSTL/4 OUTLET/	NP	1
	58-560000-3	OXYGEN SYSTEM INSTL/5 OUTLET/	NP	1
	58-560000-5	OXYGEN SYSTEM INSTL/6 OUTLET/	NP	1
- 1	AN824-5D	. TEE	1	1
- 2	58-560000-39	. TUBE ASSY,OUTLET/CYLINDER TO PILOT OXYGEN/	1	1
	58-560000-77	. TUBE ASSY	1	1
- 3	AN822-5D	. ELBOW	2	1
- 4	23599-02	. OUTLET,OXYGEN/PILOT/	1	1
- 5	58-560000-21	. TUBE ASSY	1	1
- 6	801118-00	. INDICATOR,OXYGEN FLOW	1	1
- 7	58-560000-45	. TUBE/REGULATOR TO QUANTITY GAGE/	1	1
- 8	100-8-2	. ELBOW	1	1
- 9	800322-00	. GAGE,OXYGEN QUANTITY	1	1
	96-534095-9	. ESCUTCHEON ASSY,OXYGEN PANEL	1	2
	58-364034-13	. ESCUTCHEON ASSY,OXYGEN PANEL	1	3
		/ATTACHING PARTS/		
- 10	NAS387-832-7P	. SCREW	3	1
		----*----		
- 11	96-534095-5	. . ESCUTCHEON,OXYGEN PANEL	1	2
	58-364034-5	. . ESCUTCHEON,OXYGEN PANEL	1	3
- 12	58-560000-53	. BRACKET,GAGE SUPPORT	1	1
		/ATTACHING PARTS/		
- 13	PK79XA6-6	. SCREW	2	
		----*----		
- 14	58-560000-71	. DECAL,OXYGEN OUTLET INSTRUCTIONS	1	1
- 15	58-560000-69	. TUBE ASSY	1	1
- 16	AN824-5D	. TEE	1	1
- 17	58-560000-125	. TUBE ASSY	1	1
- 18	MS21919DG5	. CLAMP	2	1
		/ATTACHING PARTS/		
	AN520-10R18	. SCREW	1	
	1006960-ZG016	. SPACER	1	
	A10K75	. RIVNUT	1	
		----*----		
- 19	AN815-5D	. UNION	4	1
- 20	58-560000-125	. TUBE ASSY	1	1
- 21	35-560001-21	. TUBE ASSY	1	1
- 22	35-560001-49	. TUBE ASSY	1	1
- 23	AN816-5D	. NIPPLE	1	1
- 24	23599-01	. OUTLET,OXYGEN MASK	1	1
- 25	96-560004-31	. ESCUTCHEON	1	1
- 26	50-560012	. PLACARD,OXYGEN OUTLET IDENTIFICATION	1	1
- 27	58-560000-65	. TUBE ASSY	1	1
- 28	AN815-5D	. UNION	1	1
- 29	58-560000-19	. TUBE ASSY	1	1
- 30	MS20826-5D	. TEE	1	1
- 31	58-560000-51	. BRACKET,OXYGEN OUTLET MOUNTING	1	1
- 32	23599-01	. OUTLET,OXYGEN MASK	1	1
	96-560000-31	. ESCUTCHEON	1	1
	50-560012	. PLACARD,OXYGEN OUTLET IDENTIFICATION	1	1

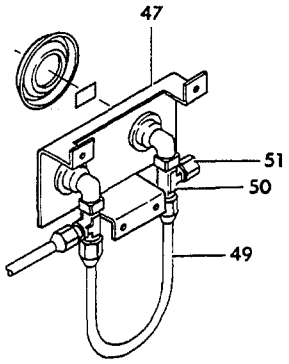

VIEW A

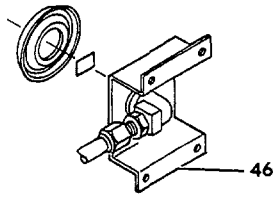

VIEW B

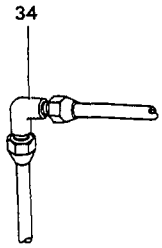

VIEW C

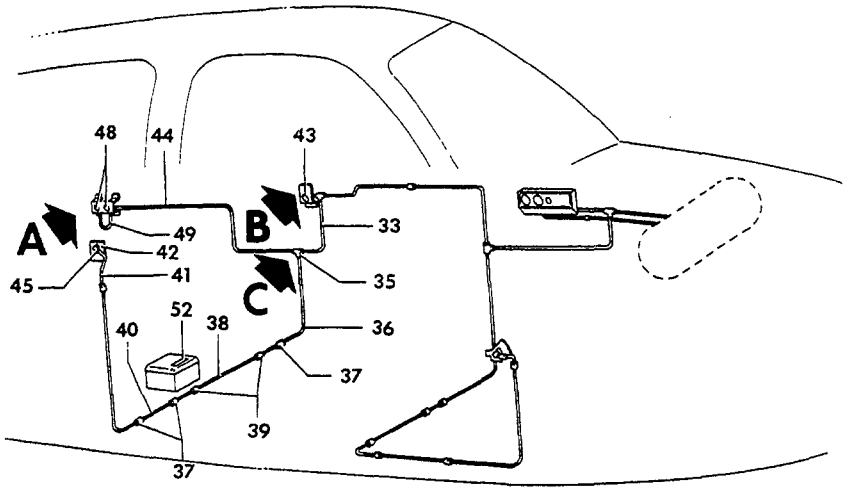

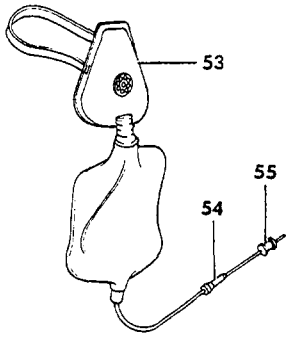

55-341-33

FIGURE 00-24.OXYGEN SYSTEM INSTALLATION
/SHEET 2 OF 2 SHEETS/

SUB-SECT UNIT & ITEM NO.	PART NO.	DESCRIPTION 1 2 3 4 5 6 7	UNITS PER ASSY	USABLE ON CODE
00-24 - 33	58-560000-33	. TUBE ASSY	1	1
- 34	AN821-5D	. ELBOW/4 OUTLET INSTL ONLY/.	1	1
- 35	AN824-5D	. TEE/5 & 6 OUTLET INSTL/	1	1
- 36	58-560000-61	. TUBE ASSY	1	1
- 37	AN815-5D	. UNION	3	1
- 38	35-560001-25	. TUBE ASSY	1	1
- 39	MS21919DG5	. CLAMP,TUBE.	2	1
		/ATTACHING PARTS/		
	AN520-10R18	. SCREW	1	
	100696D-ZG016	. SPACER.	1	
	A10K75	. RIVNUT.	1	
		----*----		
- 40	58-560000-59	. TUBE ASSY	1	1
- 41	58-560000-57	. TUBE ASSY	1	1
	AN931-5-12	. GROMMET	2	1
- 42	58-560000-49	. BRACKET,OXYGEN OUTLET MOUNTING.	1	1
- 43	23599-01	. OUTLET,OXYGEN MASK.	1	1
	96-560004-31	. ESCUTCHEON.	1	1
	50-560012	. PLACARD,OXYGEN OUTLET IDENTIFICATION.	1	1
- 44	58-560000-63	. TUBE ASSY	1	1
- 45	AN816-5D	. NIPPLE.	1	1
- 46 R	96-560004-13	. BRACKET,OXYGEN OUTLET MOUNTING.	1	1
		/WITH 5TH OUTLET INSTL/		
- 47	96-560004-15	. BRACKET,OXYGEN OUTLET MOUNTING.	1	1
		/WITH 6TH OUTLET INSTL/		
- 48	23599-01	. OUTLET,OXYGEN MASK/1 WITH 5TH OUTLET INSTL &.	2	1
		2 WITH 6TH OUTLET INSTL/		
	96-560004-31	. ESCUTCHEON.	1	1
	50-560012	. PLACARD,OXYGEN OUTLET IDENTIFICATION.	1	1
- 49	96-560004-21	. TUBE ASSY	1	1
- 50	MS20826-5D	. TEE	1	1
- 51	AN929-5D	. CAP	1	1
	58-560012	. BOX ASSY,OXYGEN MASK STOWAGE.	1	1
		/ATTACHING PARTS/		
	AN227-7B	. SOCKET.	2	
	AN227-6B	. BUTTON.	2	
	AN227-8B	. STUD.	2	
	AN227-9B	. EYELET.	2	
		----*----		
- 52	58-560013	. PLACARD,OXYGEN MASK BOX IDENTIFICATION.	1	1
	801145-00	. MASK ASSY,PASSENGER OXYGEN.	5	1
	801144-01	. MASK ASSY,PILOT OXYGEN.	1	1
- 53	800717-00	. . MASK,PASSENGER OXYGEN	5	1
	800623-02	. . MASK,PILOT OXYGEN	1	1
	800777-02	. . . MICROPHONE ASSY,PILOT	1	1
- 54	8540	. . INDICATOR,OXYGEN FLOW	6	1
- 55	8570	. . CONNECTOR	6	1

CODES OF EFFECTIVITY

1 TE-768 THRU TE-942 EXCEPT TE-938
2 TE-768 THRU TE-841
3 TE-842 THRU TE-942 EXCEPT TE-938

"END"

CHAPTER

36

PNEUMATIC

LIST OF PAGES & TABLE OF CONTENTS
FOR
CHAPTER 36-00-00 PNEUMATIC

CHAP/SUB-SECT & UNIT	PAGE NO.	EFFECTIVE DATE	TABLE OF CONTENTS
36-00-00	1	04/05/85	LIST OF PAGES & TABLE OF CONTENTS
36-10-01	1	03/10/78	PRESSURE SYSTEM
36-10-01	2	03/10/78	TE-452 THRU TE-942 EXCEPT TE-938
36-10-01	3	04/05/85	
36-10-01	4	03/10/78	
36-10-01	5	03/10/78	
36-10-01	6	03/10/78	
36-10-01	7	04/05/85	
36-10-01	8	03/10/78	
36-10-01	9	03/10/78	
36-10-10	1	04/05/85	FUSELAGE INSTRUMENT AND PRESSURE PLUMBING
36-10-10	2	03/10/78	TE-452 THRU TE-767
36-10-10	3	03/10/78	
36-10-10	4	03/10/78	
36-10-10	5	04/05/85	
36-20-01	1	04/05/85	PRESSURE INDICATING/REFERENCE/

36-10-01
PRESSURE SYSTEM
TE-452 THRU TE-942 EXCEPT TE-938

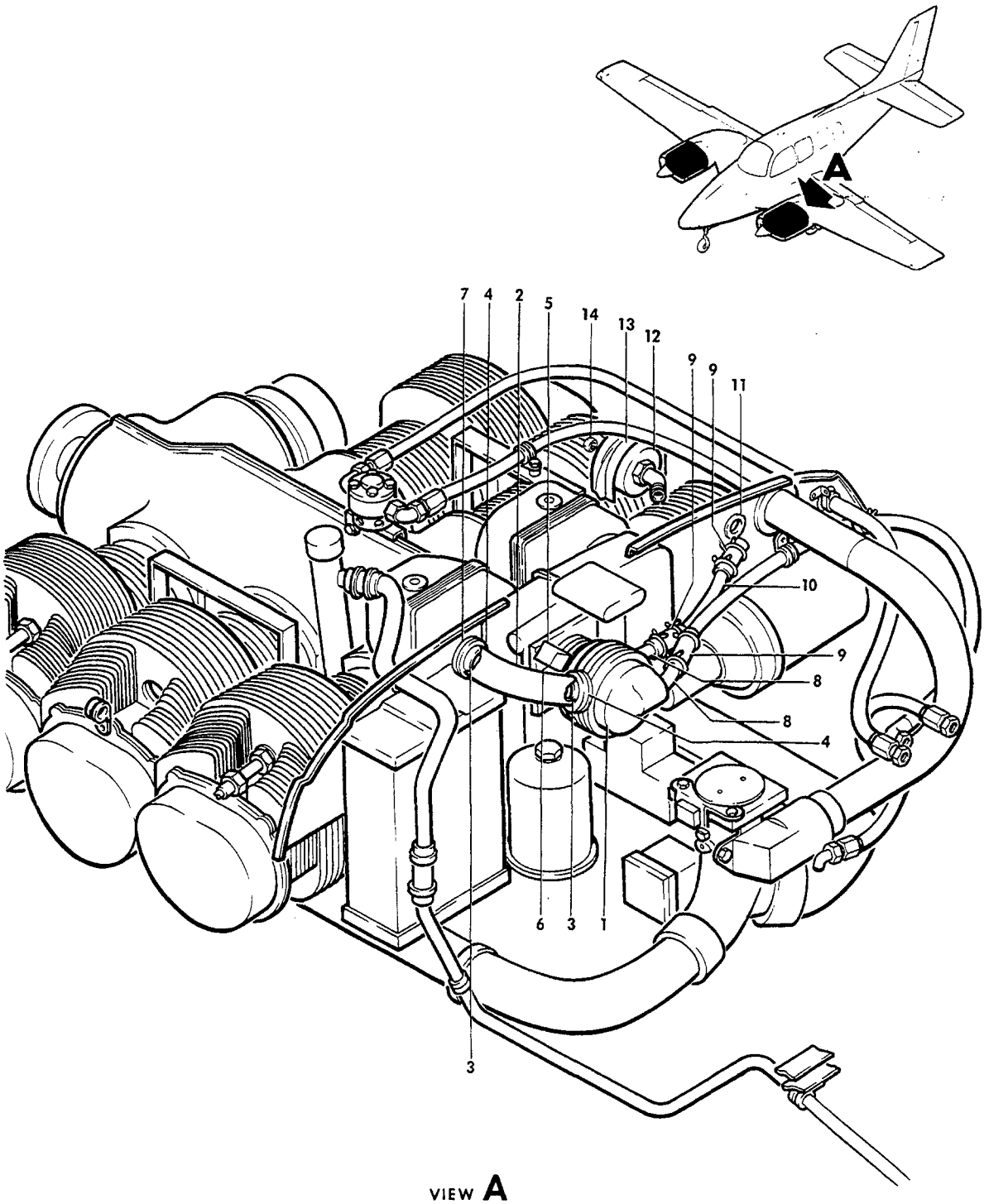

55-194-10

FIGURE 10-01.PRESSURE SYSTEM
/SHEET 1 OF 4 SHEETS/

SUB-SECT UNIT & ITEM NO.	PART NO.	DESCRIPTION 1 2 3 4 5 6 7	UNITS PER ASSY	USABLE ON CODE
10-01	96-910002-75	POWER PLANT INSTL,LH/2 BLADED PROP/	NP	1
	96-910002-76	POWER PLANT INSTL,RH/2 BLADED PROP/	NP	1
	96-910002-77	POWER PLANT INSTL,LH/3 BLADED PROP/	NP	1
	96-910002-78	POWER PLANT INSTL,RH/3 BLADED PROP/	NP	1
	96-910002-79	POWER PLANT INSTL,LH/2 BLADED PROP/	NP	2
	96-910002-80	POWER PLANT INSTL,RH/2 BLADED PROP/	NP	2
	96-910002-81	POWER PLANT INSTL,LH/3 BLADED PROP/	NP	2
	96-910002-82	POWER PLANT INSTL,RH/3 BLADED PROP/	NP	2
- 1	232CW	. PUMP,SMALL AIR PRESSURE	NP	3
	432CW12	. PUMP,LARGE AIR PRESSURE	NP	3
		NOTE 442CW12 MAY BE USED AS SPARES REPLACEMENT FOR 432CW12,442CW MAY BE USED AS A SPARES REPLACEMENT FOR 232CW,WHEN USED IN CONJUNCTION WITH 58-910024 AIR PUMP		
	242CW	. PUMP,SMALL AIR PRESSURE	1	3
	442CW12	. PUMP,LARGE AIR PRESSURE	1	3
	58-910024	. DUCT INSTL,AIR PUMP COOLING	NP	3
		/ATTACHING PARTS/		
	AN3-4A	. BOLT.	4	
	AN960-10L	. WASHER.	4	
	MS20365-1032	. NUT	4	
		----*----		
- 2	BE348-1	. . DUCT.	1	3
- 3	58-910024-3	. . TUBE.	2	3
- 4	MS21919DG21	. . CLAMP	2	3
- 5	58-910024-9	. . BRACKET	1	3
- 6	58-910024-7	. . CLIP.	1	3
- 7	AN743-12	. . CLIP.	1	3
- 8	R 1K10-6-12	. FITTING	2	3
- 9	96-910002-85	. HOSE,CONNECTING	2	3
		/ATTACHING PARTS/		
	A18	. CLAMP	6	
		----*----		
- 10	96-910002-83	. TUBE,AIR INTAKE	1	3
- 11	AN960PD1716	. WASHER.	1	3
- 12	1J1-5	. FILTER,AIR.	1	4
	1J2-5	. FILTER,AIR.	1	5
- 13	58-910021-1	. COVER,AIR FILTER.	1	3
		/ATTACHING PARTS/		
- 14	AN315-3R	. NUT	1	
	AN936A10	. WASHER.	1	
	AN970-3	. WASHER.	2	
	100696A-ZC012	. SPACER.	1	
		----*----		

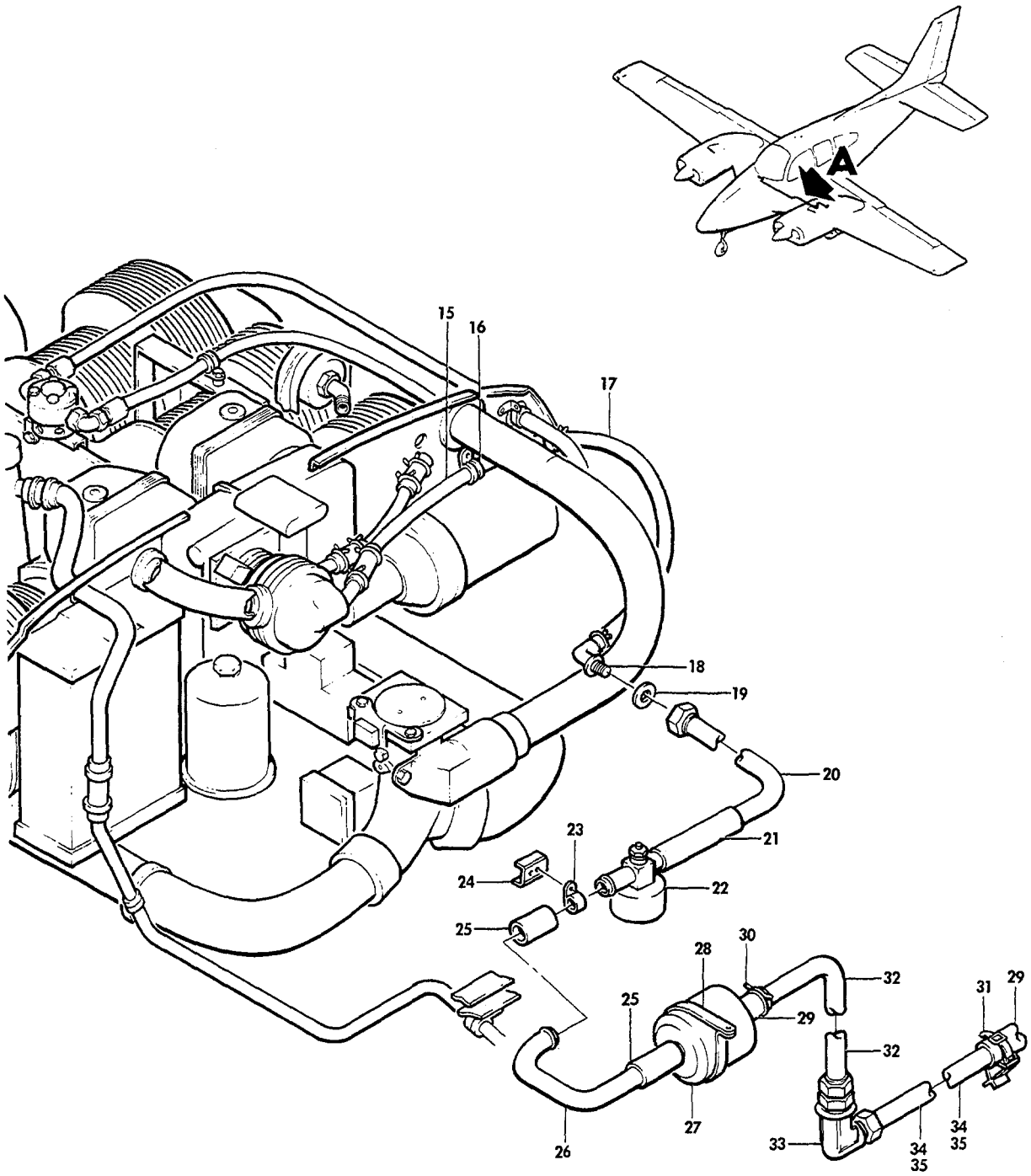

VIEW A

55-194-11

FIGURE 10-01.PRESSURE SYSTEM
/SHEET 2 OF 4 SHEETS/

ATA CODE & INDEX NO.	PART NO.	DESCRIPTION 1 2 3 4 5 6 7	UNITS PER ASSY	USABLE ON CODE
10-01 - 15	96-910002-87	TUBE,PNEUMATIC	1	3
- 16	AN742-14C	CLAMP	1	3
		/ATTACHING PARTS/		
	AN515-8R7	SCREW	1	
	AN960-8	WASHER	1	
	MS20365-832	NUT	1	
		——*——		
- 17	96-910002-89	HOSE	1	3
		/ATTACHING PARTS/		
	A18	CLAMP	2	
		——*——		
- 18	1K43-12-12	FITTING	1	3
- 19	AN960PD1716	WASHER	2	3
	96-321000-1	PLUMBING INSTL,PRESS & INSTR,NACELLE & WING	NP	3
- 20	96-321000-17	TUBE ASSY,PNEUMATIC LH	1	3
	96-321000-19	TUBE ASSY,PNEUMATIC RH	1	3
- 21	106200H12-18	HOSE,CONNECTING	1	3
		/ATTACHING PARTS/		
	AN737TW38	CLAMP,HOSE	2	
		——*——		
- 22	2H30-6	REGULATOR,PRESSURE	1	3
- 23	MS21919DG10	CLAMP,HOSE	1	3
		/ATTACHING PARTS/		
	AN3-6A	BOLT	1	3
	100696D-ZL008	SPACER	1	3
	AN960-10	WASHER	1	3
	MS20365-1032	NUT	1	3
		——*——		
- 24	96-321000-23	BRACKET,SUPPORT	1	3
- 25	106200H10-11	HOSE,CONNECTING	2	3
		/ATTACHING PARTS/		
	AN737TW34	CLAMP,HOSE	2	
		——*——		
- 26	58-320000-3	TUBE,PNEUMATIC	1	3
- 27	1J4-7	FILTER,AIR	1	3
- 28	MS21919DG50	CLAMP,AIR FILTER SUPPORT	1	3
		/ATTACHING PARTS/		
	AN3-4A	BOLT	1	
	AN960-10	WASHER	1	
	MS20365-1032	NUT	1	
		——*——		
- 29	96-321000-37	SPLICE	2	3
		/ATTACHING PARTS/		
- 30	A12	CLAMP,SUPPORT	2	
- 31	MS3367-2-9	STRAP	2	
		——*——		
- 32	96-321000-15	TUBE ASSY,LH	1	3
	96-321000-13	TUBE ASSY,RH	1	3
- 33	AN833-10D	ELBOW	1	3
	AN960-1016	WASHER	1	3
	AN924-10D	NUT	1	3
- 34	96-321000-9	TUBE ASSY,LH	1	3
- 35	96-321000-11	TUBE ASSY,RH	1	3

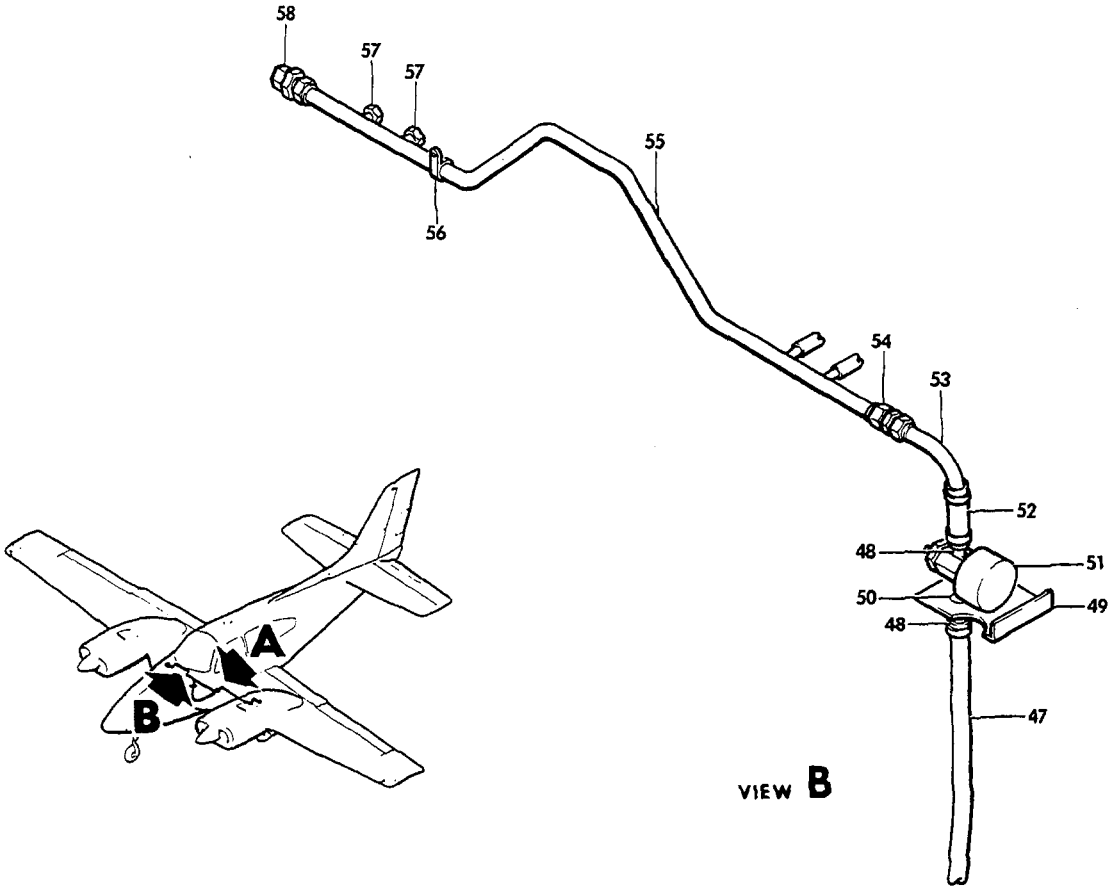

VIEW B

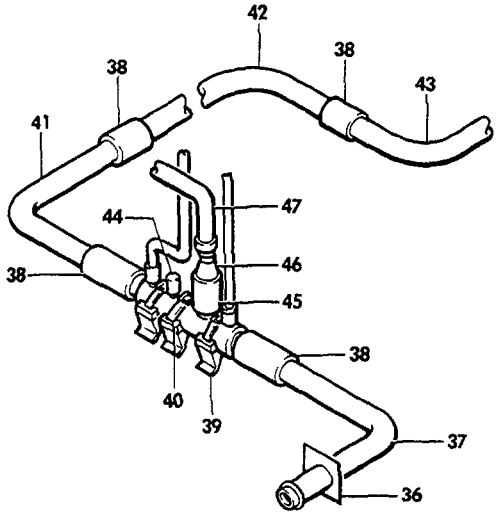

VIEW A

55-194-12

FIGURE 10-01.PRESSURE SYSTEM
/SHEET 3 OF 4 SHEETS/

SUB-SECT UNIT & ITEM NO.	PART NO.	DESCRIPTION 1 2 3 4 5 6 7	UNITS PER ASSY	USABLE ON CODE
10-01	96-324012-3	PLUMBING INSTL,FUSELAGE INST & PRESSURE . . . . /SEE CHAPTER 36-10-10/	NP	6
	58-324021-1	PLUMBING INSTL,FUSELAGE PRESSURE.	NP	7
- 36	96-324012-43	. DOUBLER,LH & RH BULKHEAD.	2	7
- 37 R	96-324102-27	. TUBE,PNEUMATIC.	1	7
- 38	58-324021-55	. TUBE,CONNECTING . . . . . /ATTACHING PARTS/	4	7
	AN737TW22	. CLAMP	2	
	A12	. CLAMP,HOSE.	2	
		----*----		
	96-384013-3	. GAGE,PRESSURE	1	7
- 39	50-324473-31	. MANIFOLD,PRESSURE DISTRIBUTION.	1	7
- 40	MS3367-1-9	. STRAP,MANIFOLD SUPPORT.	3	7
	SCMSP	. SWIVEL,MANIFOLD SUPPORT	3	7
	49296	. CLIP,MANIFOLD SUPPORT	3	7
- 41	96-324012-39	. TUBE,PNEUMATIC.	1	7
- 42	96-324012-37	. TUBE,PNEUMATIC.	1	7
- 43	96-324012-29	. TUBE,PNEUMATIC.	1	7
- 44	5-8SC	. CAP,SLEEVE. . . . . /ATTACHING PARTS/	1	7
	AN737TW26	. CLAMP	1	
		----*----		
- 45	58-324021-55	. TUBE,CONNECTING . . . . . /ATTACHING PARTS/	1	7
	AN737TW26	. CLAMP	2	
		----*----		
- 46	58-324021-61	. ADAPTER,TUBE.	1	7
- 47	58-324021-69	. TUBE,INSTRUMENT AIR . . . . . /ATTACHING PARTS/	1	7
	AN737TW24	. CLAMP	2	
		----*----		
- 48	1K10-4-8	. FITTING	2	7
- 49	96-324012-25	. BRACKET	1	7
- 50	MS35489-16	. GROMMET	1	7
- 51	50-324377-3	. VALVE ASSY.	1	7
- 52	58-324021-47	. TUBE,CONNECTING	1	7
- 53	58-324021-49	. TUBE,INSTRUMENT AIR	1	7
- 54	AN919-15D	. REDUCER	1	7
- 55	95-324073-27	. MANIFOLD ASSY,INSTRUMENT PRESSURE	1	7
- 56	AN742D8	. CLAMP,MANIFOLD SUPPORT. . . . . /ATTACHING PARTS/	1	7
	AN520-10R12	. SCREW	1	
	100696D-ZD014	. SPACER.	1	
	AN960-10	. WASHER.	1	
	MS20365-1032	. NUT	1	
		----*----		
- 57	AN913-2D	. PLUG/USE ON SINGLE INSTR PANEL INSTL/	2	7
- 58	AN806D10	. PLUG.	1	7

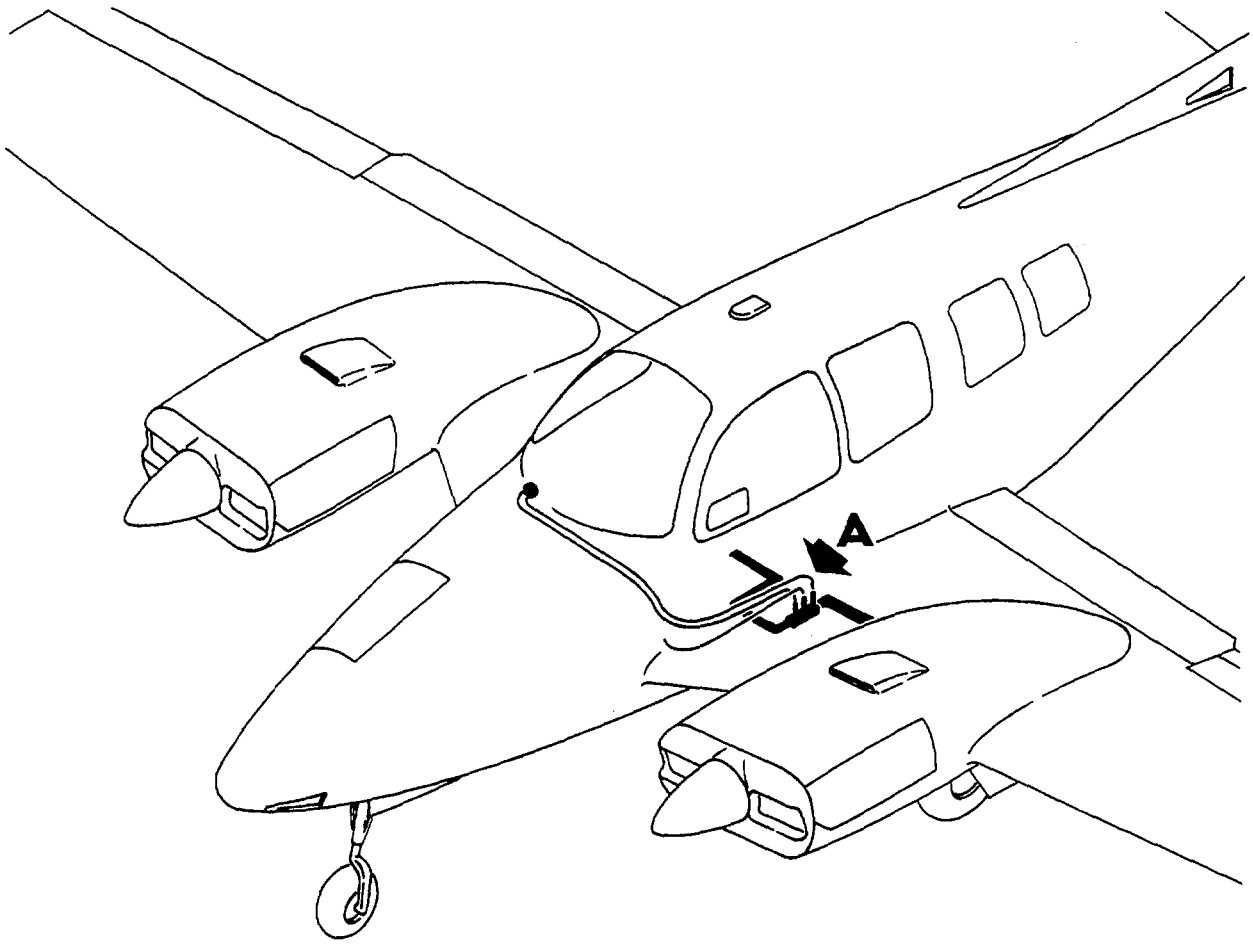

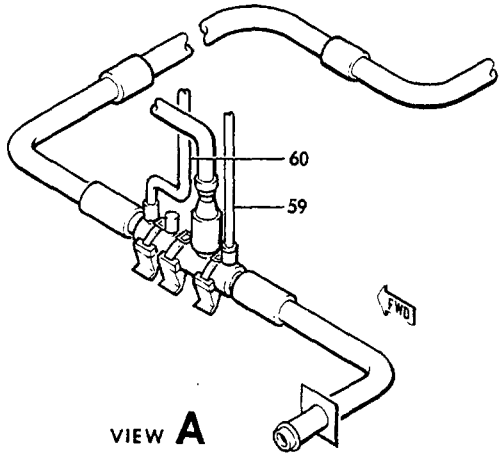

55-194-13

FIGURE 10-01.PRESSURE SYSTEM
/SHEET 4 OF 4 SHEETS/

ATA CODE & INDEX NO.	PART NO.	1 2 3 4 5 6 7 DESCRIPTION	UNITS PER ASSY	USABLE ON CODE
10-01 - 59	96-324128-95	. TUBE/TO LEFT SIDE OF PRESSURE GAGE/ . . . . . /ATTACHING PARTS/	1	7
	AN737TW22	. CLAMP	2	
		——*——		
- 60	96-324128-99	. TUBE/TO RIGHT SIDE OF PRESSURE GAGE/.	1	7

CODES OF EFFECTIVITY

1 TE-452 THRU TE-849
2 TE-850 THRU TE-942 EXCEPT TE-938
3 TE-452 THRU TE-942 EXCEPT TE-938
4 TE-452 THRU TE-936
5 TE-937,TE-939 THRU TE-942
6 TE-452 THRU TE-767
7 TE-768 THRU TE-942 EXCEPT TE-938

"END"

36-10-10
FUSELAGE INSTRUMENT AND PRESSURE PLUMBING
TE-452 THRU TE-767

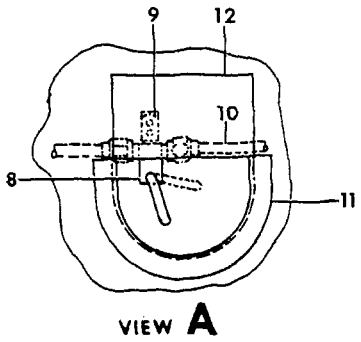

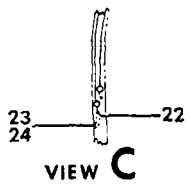

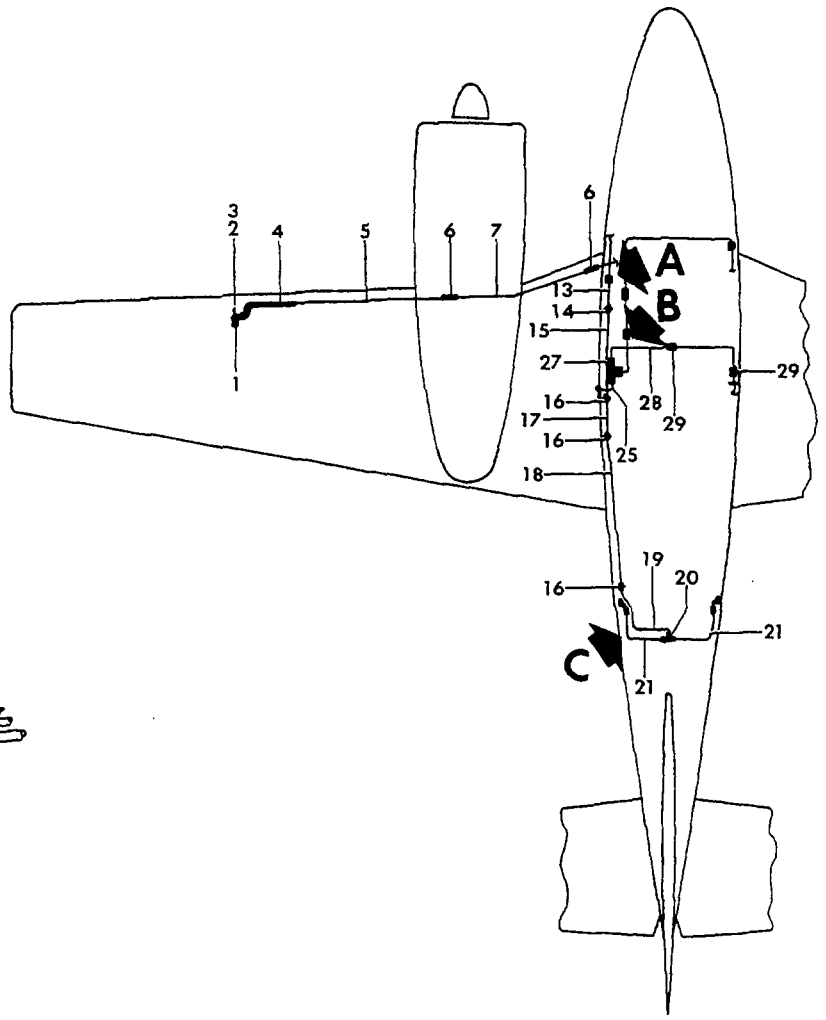

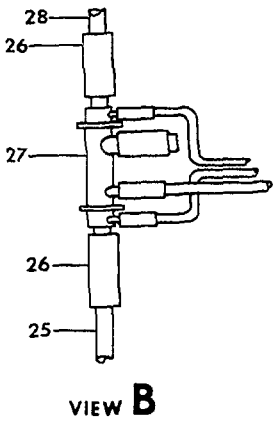

55-194-26

FIGURE 10-10.FUSELAGE INST & PRESSURE PLUMBING
/SHEET 1 OF 2 SHEETS/

ATA CODE & INDEX NO.	PART NO.	DESCRIPTION 1 2 3 4 5 6 7	UNITS PER ASSY	USABLE ON CODE
10-10	96-324012-3	PLUMBING INSTL,FUSELAGE INSTR & PRESSURE. . . . /FOR SERIALS TE-768 THRU TE-942 EXCEPT TE-938 SEE CHAPTER 36-10-01/	NP	1
- 1	95-324018-151	. MAST ASSY,PITOT LH. . . . . /ATTACHING PARTS/	1	1
	AN509-8R8	. SCREW	4	
		----*----		
- 2	50-384040	. TUBE ASSY,HEATED PITOT/ELECTRICAL/. . . . . /ATTACHING PARTS/	1	1
	AN507-640R4	. SCREW	4	
		----*----		
- 3	35-361109	. TUBE ASSY,HEATED PITOT.	1	1
- 4	96-324038-39	. TUBE,TYGON PITOT.	1	1
- 5	95-324018-221	. TUBE,ALUMINUM 90 DEGREE PITOT	1	1
- 6	95-324018-135	. TUBE,TYGON.	2	1
- 7	96-324018-13	. TUBE,ALUMINUM	1	1
	96-324068-3	. AIR SOURCE INSTL,EMERGENCY STATIC	NP	1
- 8	58-380032	. . VALVE,EMERGENCY STATIC AIR SOURCE	1	1
- 9	AN743-13	. . BRACKET,VALVE . . . . . /ATTACHING PARTS/	2	1
	AN520-10R	. . SCREW	1	
	AN960-10	. . WASHER.	1	
	MS20365-1032	. . NUT	1	
		----*----		
- 10	95-970000-141	. . TUBE ASSY,STATIC PRESSURE	1	1
- 11	95-970000-151	. . COVER,STATIC AIR SOURCE VALVE	1	1
- 12	96-324148	. . GUARD,VALVE HANDLE.	1	1
	58-324043	. . PLACARD,EMERGENCY STATIC AIR SOURCE VALVE .	1	1
- 13	96-324038-95	. TUBE ASSY,STATIC PRESSURE	1	1
	MS35489-7S	. GROMMET/STA 68/	1	1
- 14	AN919-6D	. REDUCER	1	1
	MS35489-14S	. GROMMET	7	1
- 15	96-324038-69	. TUBE ASSY,STATIC PRESSURE	1	1
- 16	AN832-6D	. UNION	3	1
	AN960-916	. WASHER,UNION.	AR	1
	AN924-6D	. NUT,UNION	3	1
- 17	96-324038-67	. TUBE ASSY	1	1
- 18	96-324038-65	. TUBE ASSY	1	1
- 19	96-324038-63	. TUBE ASSY	1	1
- 20	AN824-6D	. TEE	1	1
- 21	96-324038-77	. TUBE,LH STATIC.	1	1
	96-324038-78	. TUBE,RH STATIC.	1	1
- 22	114693-4-00500	. TUBING,TYGON. . . . . /ATTACHING PARTS/	2	1
	A8	. CLAMP	2	
		----*----		
- 23	96-440012-1	. BUTTON,STATIC AIR	2	1
- 24	35-410286	. PLACARD,STATIC AIR/BLACK OR WHITE/.	2	1
- 25	96-324012-27	. TUBE.	1	1
- 26	106200H10-10	. HOSE,MANIFOLD . . . . . /ATTACHING PARTS/	2	1
	AN737TW34	. CLAMP	2	
		----*----		
- 27	50-324473-1	. MANIFOLD.	1	1
- 28	96-324012-39	. TUBE.	1	1
- 29	106200H10-12	. HOSE. . . . . /ATTACHING PARTS/	2	1
	AN737RM34	. CLAMP	2	
		----*----		

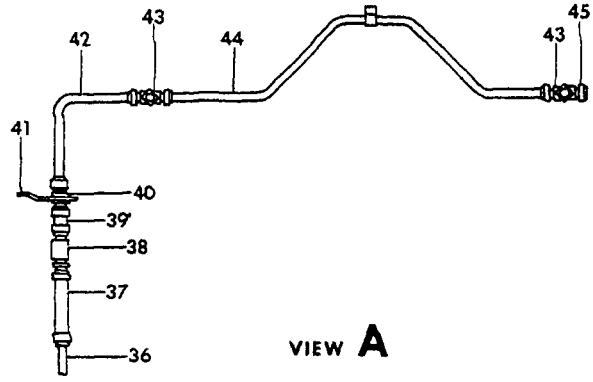

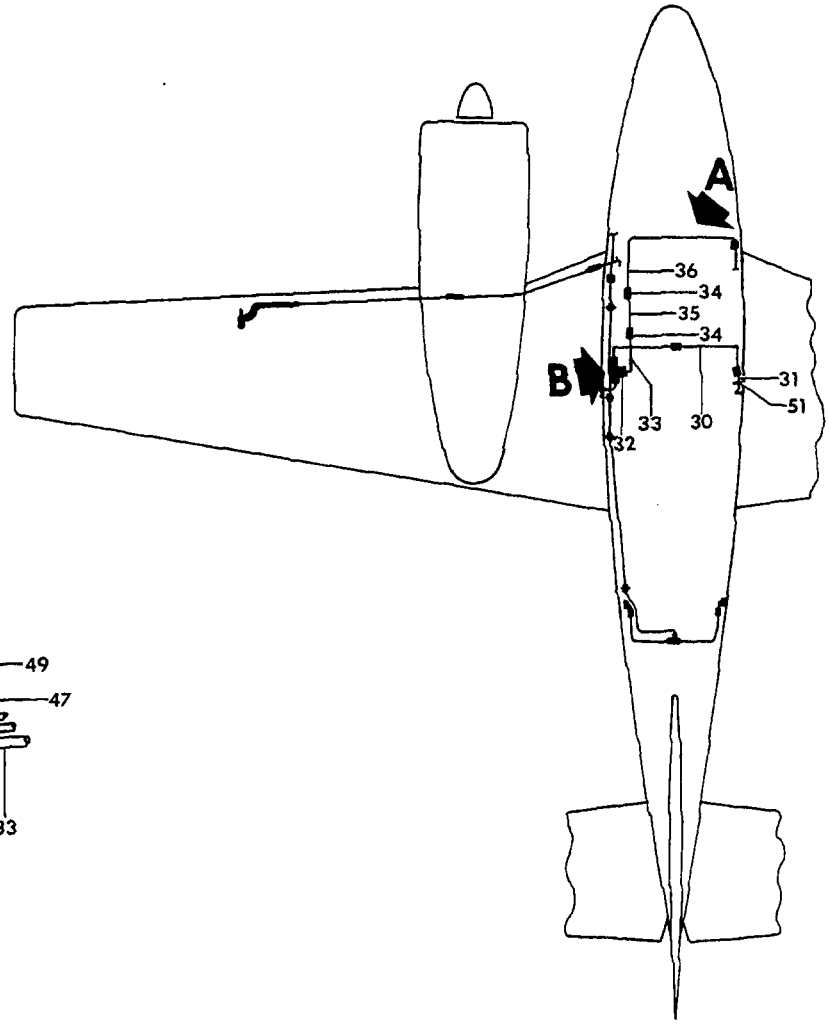

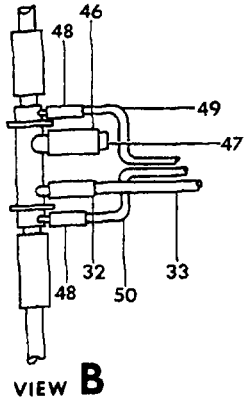

SS-194-27

FIGURE 10-10.FUSELAGE INST & PRESSURE PLUMBING
/SHEET 2 OF 2 SHEETS/

SUB-SECT UNIT & ITEM NO.	PART NO.	DESCRIPTION 1 2 3 4 5 6 7	UNITS PER ASSY	USABLE ON CODE
10-10 - 30	96-324012-37	TUBE	1	1
- 31	96-324012-29	TUBE	1	1
- 32	106200H6-8	HOSE,INSTRUMENT AIR /ATTACHING PARTS/	1	1
	A8	CLAMP	2	
		----*----		
- 33	96-324012-31	TUBE,INSTRUMENT AIR	1	1
- 34	106200H6-12	HOSE,INSTRUMENT AIR /ATTACHING PARTS/	2	1
	AN737RM26	CLAMP	2	
		----*----		
- 35	96-324012-41	TUBE,INSTRUMENT AIR	1	1
- 36	96-324012-21	TUBE,INSTRUMENT AIR	1	1
- 37	106200H6-18	HOSE,INSTRUMENT AIR /ATTACHING PARTS/	1	1
	AN737TW26	CLAMP	2	
		----*----		
- 38	50-324377-3	VALVE,INSTRUMENT AIR	1	1
- 39	106200H8-8	HOSE,INSTRUMENT AIR /ATTACHING PARTS/	1	1
	WWD30	CLAMP	2	
		----*----		
- 40	AN807-8D	ADAPTER	1	1
	AN960-1216	WASHER,ADAPTER	1	1
	AN924-8D	NUT,ADAPTER	1	1
- 41	96-324012-25	BRACKET	1	1
- 42	96-324012-23	TUBE ASSY	1	1
- 43	AN824-8D	TEE	2	1
- 44	96-324012-19	TUBE ASSY	1	1
- 45	AN929-8	CAP ASSY/TEE/	2	1
	AN742D8	CLAMP /ATTACHING PARTS/	2	1
	AN520-10R12	SCREW	1	
	100696D-ZD014	SPACER	1	
	MS20365-1032	NUT	1	
		----*----		
- 46	106200H10-8	HOSE /ATTACHING PARTS/	1	1
	AN737TW34	CLAMP	2	
		----*----		
- 47	R 60-320000-25	PLUG	1	1
- 48	106200H4-8	HOSE /ATTACHING PARTS/	2	1
	A6	CLAMP	2	
		----*----		
- 49	96-324012-35	TUBE	1	1
- 50	96-324012-33	TUBE	1	1
- 51	96-324012-43	DOUBLER/STA 100.0/	2	1

CODES OF EFFECTIVITY

1 TE-452 THRU TE-767

36-20-01
PRESSURE INDICATING/REFERENCE/
FOR BREAKDOWN OF PRESSURE INDICATING
SEE CHAPTER 39

CHAPTER

37

VACUUM

LIST OF PAGES & TABLE OF CONTENTS
FOR
CHAPTER 37-00-00 VACUUM

CHAP/SUB-SECT & UNIT	PAGE NO.	EFFECTIVE DATE	TABLE OF CONTENTS
37-00-00	1	04/05/85.	LIST OF PAGES & TABLE OF CONTENTS . . . . .
37-10-01	1	04/05/85.	VACUUM SYSTEM/REFERENCE/. . . . .
37-20-01	1	04/05/85.	VACUUM INDICATING/REFERENCE/. . . . .

37-10-01
VACUUM SYSTEM/REFERENCE/
FOR VACUUM SYSTEM BREAKDOWN SEE CHAPTER 71.

"END"

37-20-01
VACUUM INDICATING/REFERENCE/
FOR BREAKDOWN OF VACUUM INDICATING
SEE CHAPTER 39.

CHAPTER

39

LIST OF PAGES & TABLE OF CONTENTS FOR CHAPTER 39-00-00 ELEC PANELS,PARTS,INST.

CHAP/SUB-SECT & UNIT	PAGE NUMBER	EFFECTIVE DATE	TABLE OF CONTENTS
39-00-00	1	08/01/01	LIST OF PAGES & TABLE OF CONTENTS
39-00-00	2	08/01/01	
39-10-01	1	03/10/78	FIXED INSTRUMENT PANEL
39-10-01	2	03/10/78	TC-191 THRU TC-1607,TE-1 THRU TE-451
39-10-01	3	04/05/85	
39-10-01	4	03/10/78	
39-10-01	5	03/10/78	
39-10-01	6	03/10/78	
39-10-01	7	03/10/78	
39-10-10	1	03/10/78	FIXED INSTRUMENT PANEL
39-10-10	2	03/10/78	TE-452 THRU TE-767
39-10-10	3	03/10/78	
39-10-10	4	03/10/78	
39-10-10	5	03/10/78	
39-10-20	1	03/10/78	FIXED INSTRUMENT PANEL
39-10-20	2	03/10/78	TE-768 THRU TE-942 EXCEPT TE-938
39-10-20	3	03/10/78	
39-10-20	4	03/10/78	
39-10-20	5	03/10/78	
39-10-20	6	03/10/78	
39-10-20	7	03/10/78	
39-10-30	1	03/10/78	INSTRUMENT PANEL
39-10-30	2	03/10/78	TC-1 THRU TC-190
39-10-30	3	04/05/85	
39-10-30	4	03/10/78	
39-10-30	5	03/10/78	
39-10-30	6	03/10/78	
39-10-30	7	03/10/78	
39-14-01	1	03/10/78	FLOATING INSTRUMENT PANEL
39-14-01	2	03/10/78	TC-1 THRU TC-190
39-14-01	3	03/10/78	
39-14-01	4	03/10/78	
39-14-01	5	04/05/85	
39-14-10	1	03/10/78	FLOATING INSTRUMENT PANEL
39-14-10	2	03/10/78	TC-191 THRU TC-1607,TE-1 THRU TE-451
39-14-10	3	04/05/85	
39-14-10	4	03/10/78	
39-14-10	5	03/10/78	
39-14-20	1	03/10/78	FLOATING INSTRUMENT PANEL
39-14-20	2	03/10/78	TE-452 THRU TE-767
39-14-20	3	03/10/78	
39-14-30	1	03/10/78	FLOATING INSTRUMENT PANEL
39-14-30	2	03/10/78	TE-768 THRU TE-942 EXCEPT TE-938
39-14-30	3	03/10/78	
39-14-30	4	03/10/78	
39-14-30	5	03/10/78	
39-14-40	1	03/10/78	INSTRUMENT SUBPANEL
39-14-40	2	03/10/78	TC-191 THRU TC-1607,TE-1 THRU TE-451
39-14-40	3	04/05/85	
39-14-40	4	03/10/78	
39-14-40	5	03/10/78	
39-14-40	6	03/10/78	
39-14-40	7	04/05/85	
39-14-50	1	03/10/78	INSTRUMENT SUBPANEL
39-14-50	2	03/10/78	TE-452 THRU TE-767

LIST OF PAGES & TABLE OF CONTENTS
FOR
CHAPTER 39-00-00 ELEC PANELS,PARTS,INST. *(Continued)*

CHAP/SUB-SECT & UNIT	PAGE NUMBER	EFFECTIVE DATE	TABLE OF CONTENTS
39-14-50	3	03/10/78	
39-14-50	4	03/10/78	
39-14-50	5	04/05/85	
39-14-60	1	03/10/78	INSTRUMENT SUBPANEL
39-14-60	2	08/01/01	TE-768 THRU TE-942 EXCEPT TE-938
39-14-60	3	08/01/01	
39-14-60	4	03/10/78	
39-14-60	5	03/10/78	
39-14-70	1	03/10/78	IGNITION PANEL AND OUTSIDE AIR TEMPERATURE
39-14-70	2	03/10/78	INDICATOR
39-14-70	3	03/10/78	TC-1 THRU TC-190
39-14-80	1	03/10/78	IGNITION PANEL AND
39-14-80	2	03/10/78	OUTSIDE AIR TEMPERATURE INDICATOR
39-14-80	3	03/10/78	TC-191 THRU TC-1607,
39-14-80	4	03/10/78	TE-1 THRU TE-942 EXCEPT TE-938
39-14-80	5	04/05/85	
39-17-01	1	03/10/78	INSTRUMENT PANEL PLUMBING
39-17-01	2	03/10/78	TC-1 THRU TC-190
39-17-01	3	03/10/78	
39-17-01	4	03/10/78	
39-17-01	5	03/10/78	
39-17-10	1	03/10/78	INSTRUMENT PANEL PLUMBING
39-17-10	2	03/10/78	TC-191 THRU TC-1607,TE-1 THRU TE-451
39-17-10	3	03/10/78	
39-17-10	4	03/10/78	
39-17-10	5	03/10/78	
39-17-10	6	03/10/78	
39-17-10	7	03/10/78	
39-17-20	1	03/10/78	INSTRUMENT PANEL PLUMBING
39-17-20	2	03/10/78	TE-452 THRU TE-767
39-17-20	3	03/10/78	
39-17-20	4	03/10/78	
39-17-20	5	03/10/78	
39-17-30	1	03/10/78	INSTRUMENT PANEL PLUMBING
39-17-30	2	03/10/78	TE-768 THRU TE-942 EXCEPT TE-938
39-17-30	3	03/10/78	
39-17-30	4	03/10/78	
39-17-30	5	03/10/78	

39-10-01
FIXED INSTRUMENT PANEL
TC-191 THRU TC-1607,TE-1 THRU TE-451

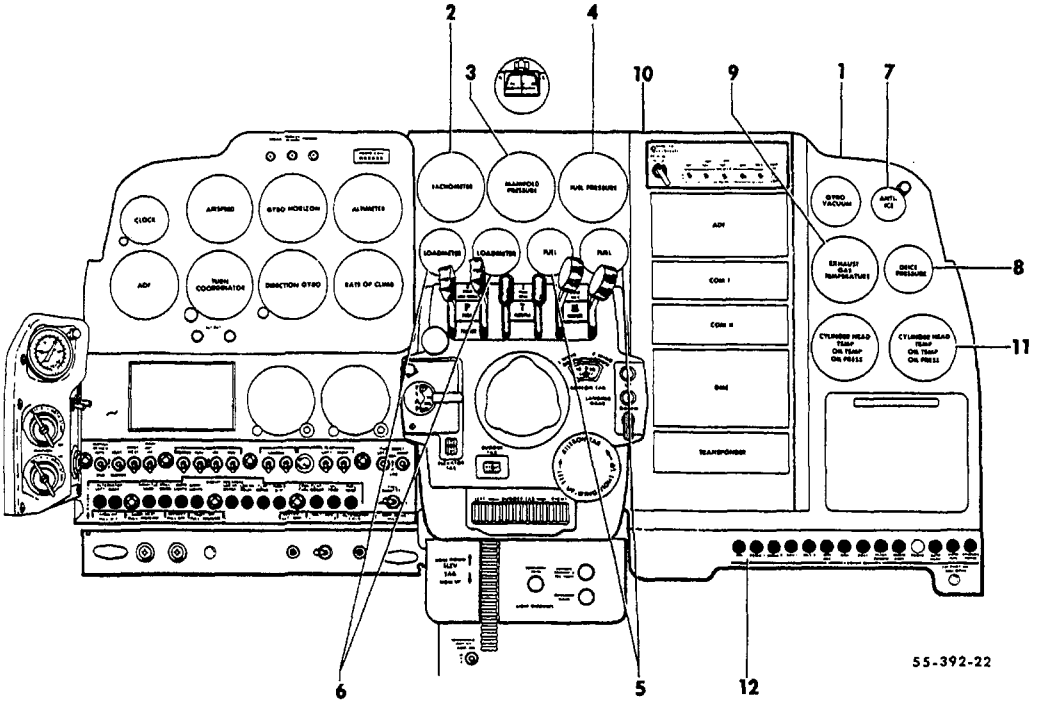

FIGURE 10-01.INSTRUMENT PANEL,FIXED
/SHEET 1 OF 3 SHEETS/

SUB-SECT UNIT & ITEM NO.	PART NO.	DESCRIPTION 1 2 3 4 5 6 7	UNITS PER ASSY	USABLE ON CODE
10-01	96-324029	PANEL INSTL,INSTRUMENT/WITH GENERATOR/.	NP	1
	96-324029-9	PANEL INSTL,INSTRUMENT/WITH ALTERNATOR/	NP	2
	96-324056	PANEL INSTL,INSTRUMENT.	NP	3
	96-324005	PANEL INSTL,DUAL INSTRUMENT	NP	4
	96-324006	PANEL INSTL,DUAL INSTRUMENT	NP	5
	96-324030-29	. PANEL ASSY,RH FIXED	1	6
- 1	96-324030-55	. PANEL ASSY,RH FIXED	1	7
	96-324030-3	. PANEL ASSY,RH FIXED	1	3
	96-324005-7	. PANEL ASSY,RH FIXED/WITH DUAL INSTRUMENTS/. .	1	8
	96-324088	. PANEL ASSY,CENTER FIXED/WITH DUAL INSTR/. . .	1	8
- 2	96-380014-1	. TACHOMETER.	1	1
	96-380014-3	. TACHOMETER.	1	3
	50-380010-21	. TACHOMETER,DUAL ELEC/WITH SYNCH/.	1	1
	96-384059-1	. TACHOMETER,DUAL ELEC/WITH SYNCH,WEDGE LIT/. .	1	14
- 3	50-380011-17	. GAGE,MANIFOLD PRESSURE.	1	8
- 4	96-324010-5	. GAGE,FUEL PRESSURE.	1	9
	96-380024	. GAGE,FUEL PRESSURE.	1	10
	96-380015-5	. GAGE,FUEL PRESSURE.	1	3
- 5	95-380018	. GAGE,FUEL QUANTITY.	2	11
	5643295	. CLAMP,FUEL QUANTITY GAGE.	2	11
	1515642	. INSULATOR,FUEL QUANTITY GAGE.	2	11
	AN935-10	. WASHER,FUEL QUANTITY GAGE	2	11
	AN341-10	. NUT,FUEL QUANTITY GAGE.	2	11
	58-380028-1	. GAGE,FUEL QUANTITY.	2	12
	58-380028-11	. GAGE,FUEL QUANTITY/WITH 22 GAL FUEL TANKS/. .	2	13
	58-380050-3	. GAGE,FUEL QUANTITY/WITH 22 GAL FUEL TANKS,1S. A SPARES REPLACEMENT FOR 58-380028-1 & -11 IN PAIRS ONLY/	2	14
	58-380028-7	. GAGE,FUEL QUANTITY/WITH 37 GAL FUEL TANKS/. .	2	13
	58-380050-9	. GAGE,FUEL QUANTITY/WITH 37 GAL FUEL TANKS,1S. A SPARES REPLACEMENT FOR 58-380028-1 & -7 IN PAIRS ONLY/	2	14
	58-324041	. PRINTED CIRCUIT BOARD ASSY,FUEL QUANTITY GAGE	2	14
	R 96-329011	. PRINTED CIRCUIT BOARD ASSY.	2	11
	95-380017	. AMMETER/WITH GENERATOR/	2	15
	95-380017-1	. AMMETER/WITH ALTERNATOR/.	2	5
- 6	58-380048-1	. LOADMETER/SUPERSEDES 96-384006-1/	2	14
	50-384052	. GAGE,INSTRUMENT VACUUM.	1	16
	50-384052-5	. GAGE,INSTRUMENT VACUUM.	1	17
- 7	95-324008-43	. BEZEL/WITHOUT OPTIONAL INSTRUMENTS/	1	8
- 8	50-324104	. BEZEL/WITHOUT OPTIONAL INSTRUMENTS/	1	8
- 9	50-324103-1	. BEZEL/WITHOUT OPTIONAL INSTRUMENTS/ . . . . . /ATTACHING PARTS/	1	8
	AN507B632R	. SCREW/INSTRUMENT & BEZEL ATTACHING/	AR	
		----*----		
- 10	96-340025	. PANEL,BLANK RADIO . . . . . /ATTACHING PARTS/	1	8
	NAS387-1032	. SCREW	7	
	102933D5ZM0190	. SPACER.	7	
		----*----		
- 11	96-380016	GAGE,ENGINE/CYLINDER HEAD TEMP,OIL TEMP & . . . OIL PRESSURE/	2	1
	96-380016-1	GAGE,ENGINE/CYLINDER HEAD TEMP,OIL TEMP & . . . OIL PRESSURE/	2	3
	50-324103-1	BEZEL . . . . . /ATTACHING PARTS/	2	8
	AN507B632R	SCREW/ATTACHES INSTRUMENTS & BEZELS/.	AR	
	MS20365-632	NUT/ATTACHES BEZELS/.	4	
		----*----		
- 12	96-324117	PLACARD,RADIO CIRCUIT BREAKER	1	8

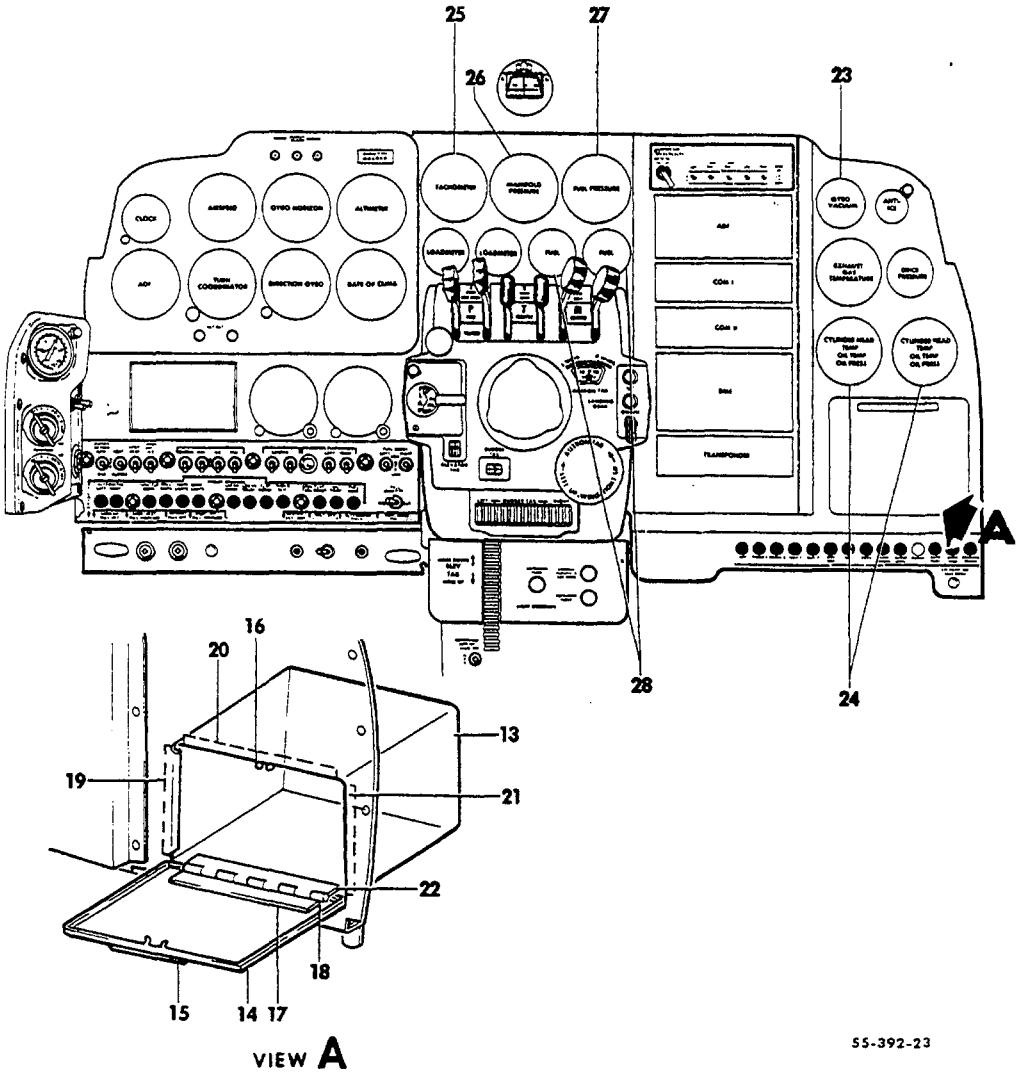

FIGURE 10-01. INSTRUMENT PANEL, FIXED
/SHEET 2 OF 3 SHEETS/

ATA CODE & INDEX NO.	PART NO.	DESCRIPTION 1 2 3 4 5 6 7	UNITS PER ASSY	USABLE ON CODE
10-01	95-324038	TRIM INSTALLATION,INSTRUMENT PANEL.	NP	18
	58-530125-3	. GLOVE COMPARTMENT INSTALLATION.	NP	7
- 13	95-324038-29	. . BOX ASSY,GLOVE.	1	18
	58-530125-11	. . BOX ASSY,GLOVE.	1	7
		/ATTACHING PARTS/		
	AN530-6-4	. . SCREW	6	18
	NAS384-6-6P	. . SCREW	6	7
	NAS391B6P	. . WASHER.	6	7
	A6500-6Z1	. . NUT	6	18
		----*----		
- 14	95-324038-63	. . DOOR ASSY,GLOVE BOX	1	6
	96-324056-3	. . DOOR ASSY,GLOVE BOX	1	3
	58-530125-5	. . DOOR ASSY,GLOVE BOX	1	7
		/ATTACHING PARTS/		
	AN530-6-4	. . SCREW	3	18
	AN530-6R6	. . SCREW	3	7
	A6500-6Z1	. . NUT	3	18
		----*----		
- 15	35-324204	. . HANDLE,GLOVE BOX DOOR	1	6
	50-534481-7	. . HANDLE,GLOVE BOX DOOR	1	3
	2A12715	. . HANDLE,GLOVE BOX DOOR	1	7
		/ATTACHING PARTS/		
	AN530-6R	. . SCREW	2	18
	AN530-10R6	. . SCREW	2	7
		----*----		
- 16	5	. . CATCH ASSY,GLOVE BOX DOOR ROLLER.	1	8
		/ATTACHING PARTS/		
	AN515-6R	. . SCREW	2	18
	AN530-6R6	. . SCREW	2	7
	MS20365-6	. . WASHER.	2	18
	AN960-6	. . NUT	2	18
		----*----		
- 17	95-324038-37	. . HINGE HALF,DOOR	1	18
	35-534410-13	. . HINGE HALF,DOOR	1	7
	95-324038-39	. . HINGE HALF,BOX.	1	18
	58-530125-15	. . HINGE HALF,BOX.	1	7
- 18	AN253-2-513	. . PIN,HINGE	1	18
	105774C-ZE00328	. . PIN,HINGE	1	7
- 19	35-324387-5	. ANGLE	1	8
- 20	95-324035-13	. ANGLE	1	8
- 21	95-324035-15	. ANGLE	1	8
- 22	96-324030-13	. ANGLE	1	8
- 23	96-384052-1	GAGE,GYRO VACUUM/WEDGE LIT/	1	19
	96-384052-3	GAGE,GYRO VACUUM/WEDGE LIT/	1	20
- 24	96-384058-1	GAGE,ENGINE/WEDGE LIT/.	2	14
- 25	96-384057-1	TACHOMETER/WEDGE LIT/	1	14
- 26	96-384056-1	GAGE,MANIFOLD PRESSURE/WEDGE LIT/	1	14
- 27	96-384055-1	GAGE,FUEL PRESSURE/WEDGE LIT/	1	14
- 28	96-384054-1	GAGE,FUEL QUANTITY/WEDGE LIT/	2	14
	96-384054-7	GAGE,FUEL QUANTITY/WEDGE LIT,40 GAL TANK/ . . .	2	14
	96-384054-11	GAGE,FUEL QUANTITY/WEDGE LIT,25 GAL TANK/ . . .	2	14

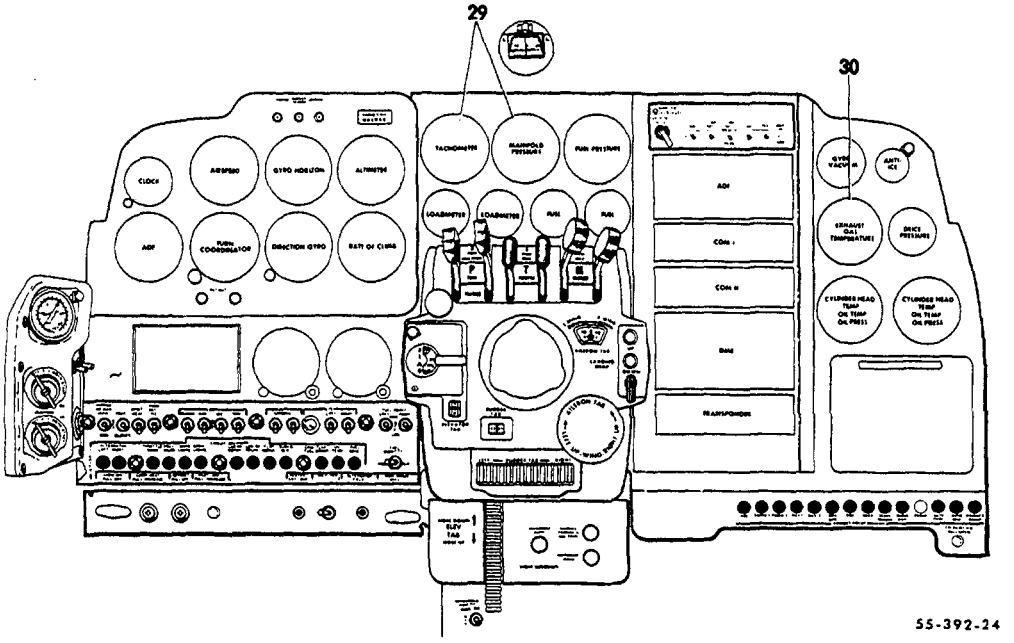

FIGURE 10-01.INSTRUMENT PANEL,FIXED
/SHEET 3 OF 3 SHEETS/

ATA CODE & INDEX NO.	PART NO.	DESCRIPTION 1 2 3 4 5 6 7	UNITS PER ASSY	USABLE ON CODE
10-01 - 29	96-384053-1	LOADMETER/WEDGE LIT/.	2	14
	50-380010-21	TACHOMETER,DUAL ELECTRIC/WITH SYNCHROSCOPE/ . .	1	1
	96-384059-1	TACHOMETER,DUAL ELECTRIC/WITH SYNCHROSCOPE, . . WEDGE LIT/	1	14
	58-380022-11	LIGHT TRAY ASSY,WEDGE LIT INSTRUMENTS	11	14
	MODEL 136	INDICATOR,MIXTURE CONTROL	1	21
	205-10A	INDICATOR,MIXTURE CONTROL	1	22
- 30	205-10AL	INDICATOR,MIXTURE CONTROL/INTERNALLY LIGHTED/ .	1	14
	58-380042-1	INDICATOR,ENGINE HOURS.	1	8
	58-380043-1	INDICATOR,FLIGHT HOURS.	1	8

CODES OF EFFECTIVITY

1 TC-191 THRU TC-1607
2 TC-502 THRU TC-1607
3 TE-1 THRU TE-451
4 TC-191 THRU TC-501
5 TC-502 THRU TC-1607 TE-1 THRU TE-451
6 TC-191 THRU TC-1402
7 TC-1403 THRU TC-1607
8 TC-191 THRU TC-1607 TE-1 THRU TE-451
9 TC-191 THRU TC-903
10 TC-904 THRU TC-1607
11 TC-191 THRU TC-1298 TE-1 THRU TE-451
12 TC-1299 THRU TC-1425
13 TC-1426 THRU TC-1607
14 TC-1299 THRU TC-1607
15 TC-191 THRU TC-1298
16 TC-191 THRU TC-1435 TE-1 THRU TE-451
17 TC-1436 THRU TC-1607
18 TC-191 THRU TC-1402 TE-1 THRU TE-451
19 TC-1299 THRU TC-1428
20 TC-1429 THRU TC-1607
21 TC-191 THRU TC-604 TE-1 THRU TE-451
22 TC-605 THRU TC-1607

"END"

39-10-10
FIXED INSTRUMENT PANEL
TE-452 THRU TE-767

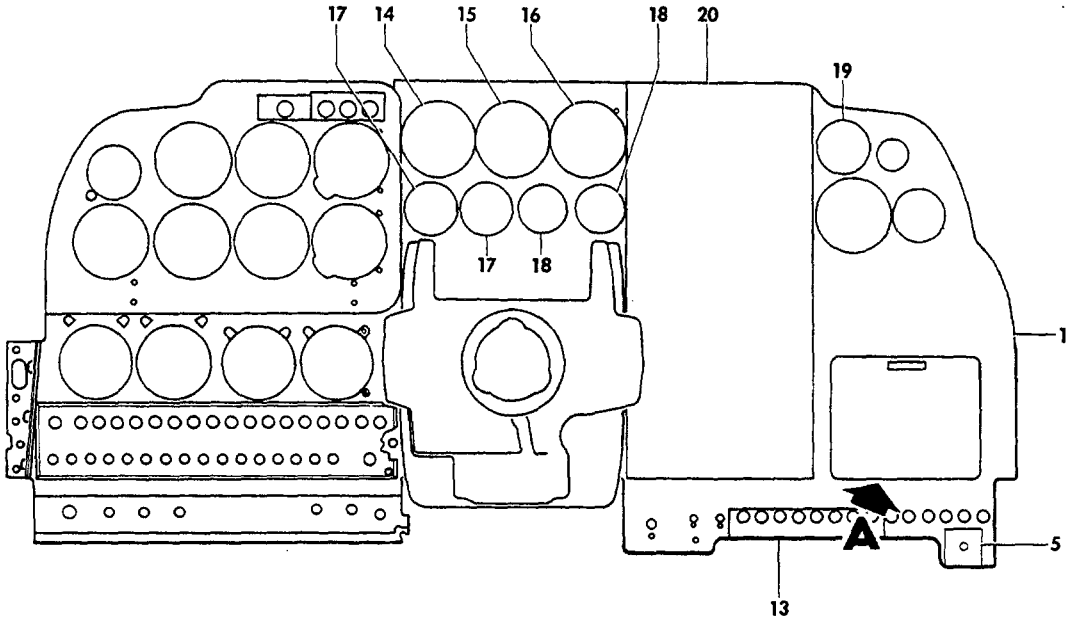

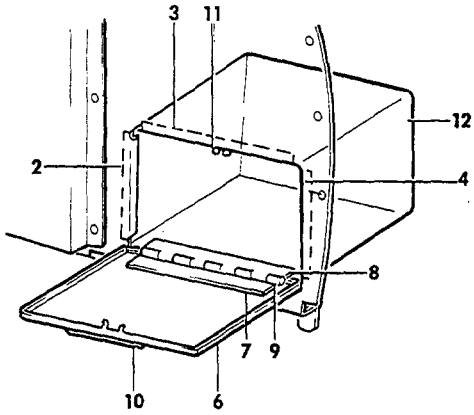

VIEW A

55-392-20

FIGURE 10-10. INSTRUMENT PANEL, FIXED
/SHEET 1 OF 2 SHEETS/

ATA CODE & INDEX NO.	PART NO.	DESCRIPTION 1 2 3 4 5 6 7	UNITS PER ASSY	USABLE ON CODE
10-10	96-324008	PANEL INSTL,INSTRUMENT.	NP	1
- 1	96-324030-29	. PANEL ASSY,FIXED INSTRUMENT	1	1
		/ATTACHING PARTS/		
	AN509-10R	. SCREW	3	
	AN520-10R	. SCREW	3	
	AN3-5A	. BOLT.	1	
	AN960-10	. WASHER.	7	
	MS20365-1032	. NUT	7	
		----*----		
- 2	35-324387-5	. . ANGLE,LH SIDE	1	1
- 3	95-324035-13	. . ANGLE,UPPER	1	1
	96-324030-13	. . ANGLE,LOWER	1	1
- 4	95-324035-15	. . ANGLE,RH SIDE	1	1
- 5	95-554042	. . PLACARD,COPILOT AIR VENT.	1	1
	96-324056-3	. DOOR ASSY,GLOVE BOX	1	1
- 6	96-324056-5	. . DOOR,GLOVE BOX.	1	1
- 7	95-324038-37	. . HINGE,HALF.	1	1
- 8	95-324038-39	. . HINGE,HALF.	1	1
- 9	AN253-2-513	. . PIN,HINGE	1	1
- 10	50-534481-7	. . HANDLE,GLOVE BOX.	1	1
		/ATTACHING PARTS/		
	AN530-6R	. . SCREW	2	
		----*----		
- 11	5	. CATCH ASSY,GLOVE BOX DOOR ROLLER.	1	1
- 12	95-324038-29	. BOX ASSY,GLOVE.	1	1
- 13	96-324117	. PLACARD,RADIO CIRCUIT BREAKERS IDENTIFICATION	1	1
- 14	96-380014-3	. TACHOMETER/STANDARD WITHOUT SYNCHROSCOPE/ . .	1	1
	50-380010-9	. TACHOMETER/OPTIONAL WITH SYNCHROSCOPE/. . . .	1	1
- 15	50-380011-17	. GAGE,MANIFOLD PRESSURE.	1	1
- 16	96-380015-5	. GAGE,FUEL PRESSURE.	1	1
- 17	95-380017-1	. AMMETER	2	1
- 18	95-380018	. GAGE,FUEL	2	1
	5643295	. STRAP,GAGE MOUNTING	2	1
	1515642	. TERMINAL SEPARATOR.	2	1
		/ATTACHING PARTS/		
	AN935-10	. WASHER.	2	
	AN341-10	. NUT	2	
		----*----		
- 19	164-3	. GAGE,PRESSURE	1	2
	96-384013	. GAGE,PRESSURE	1	3
	96-384013-1	. GAGE,PRESSURE	1	4
		/ATTACHING PARTS/		
	AN5078632R	. SCREW	AR	
		----*----		
- 20	96-340025	. PANEL,RADIO/BLANK/.	1	1
		/ATTACHING PARTS/		
	NAS387-1032	. SCREW	7	
	NAS179-6	. SPACER.	7	
		----*----		

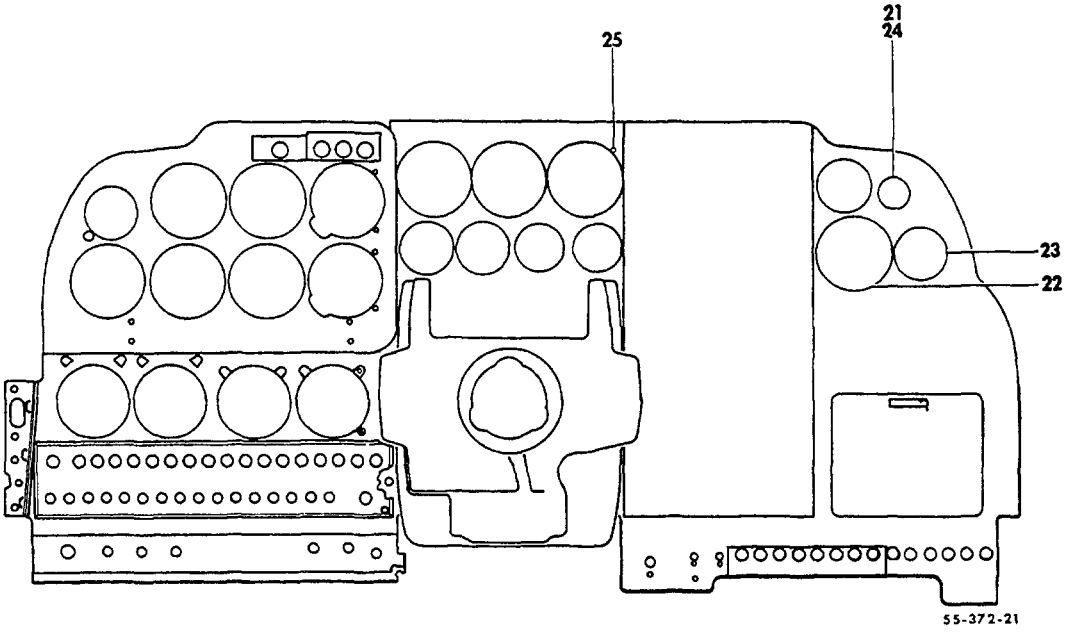

FIGURE 10-10. INSTRUMENT PANEL, FIXED
/SHEET 2 OF 2 SHEETS/

ATA CODE & INDEX NO.	PART NO.	DESCRIPTION 1 2 3 4 5 6 7	UNITS PER ASSY	USABLE ON CODE
10-10 - 21	95-324008-43	. BEZEL,INSTRUMENT CUTOUT	1	1
- 22	50-324103-1	. BEZEL,INSTRUMENT CUTOUT	1	1
- 23	50-324104	. BEZEL,INSTRUMENT CUTOUT	1	1
- 24	50-384001-31	GAGE,ALCOHOL QUANTITY	1	1
		NOTE THE FOLLOWING OPTIONAL INSTRUMENTS ARE NOT INDEXED AS LOCATION IN PANEL MAY VARY		
	573F24V-B	METER,FLIGHT HOUR/SUPERSEDES M1990/	1	1
	M1986	METER,ENGINE HOUR	1	1
	50-380086-3	AMMETER,3 BLADE ELECTRIC PROP DEICER.	1	1
	50-380086-1	AMMETER,2 BLADE ELECTRIC PROP DEICER.	1	1
	50-384024-19	INDICATOR,AIR SPEED RH.	1	1
	136	INDICATOR,MIXTURE CONTROL	1	1
	58-380069-1	ALTIMETER,RH/ALTITUDE IN FEET,BAROMETRIC. . . . SCALE INCHES HG,SUPERSEDES 50-380094-9/	1	1
	50-380094-11	ALTIMETER,RH/ALTITUDE IN FEET,BAROMETRIC. . . . SCALE IN INCHES HG AND MILLIBARS/	1	1
	50-380094-13	ALTIMETER,RH/ALTITUDE IN FEET,BAROMETRIC. . . . SCALE IN MILLIBARS/	1	1
	50-380094-15	ALTIMETER,RH/ALTITUDE IN METERS,BAROMETRIC. . . SCALE IN MILLIBARS/	1	1
- 25	A897082-327	POST LIGHT/BLUE/.	AR	1
	A8970-2-327	POST LIGHT/RED/	AR	1

CODES OF EFFECTIVITY

1 TE-452 THRU TE-767 2 TE-452 THRU TE-483
3 TE-484 THRU TE-560 4 TE-561 THRU TE-767

"END"

39-10-20
FIXED INSTRUMENT PANEL
TE-768 THRU TE-942 EXCEPT TE-938

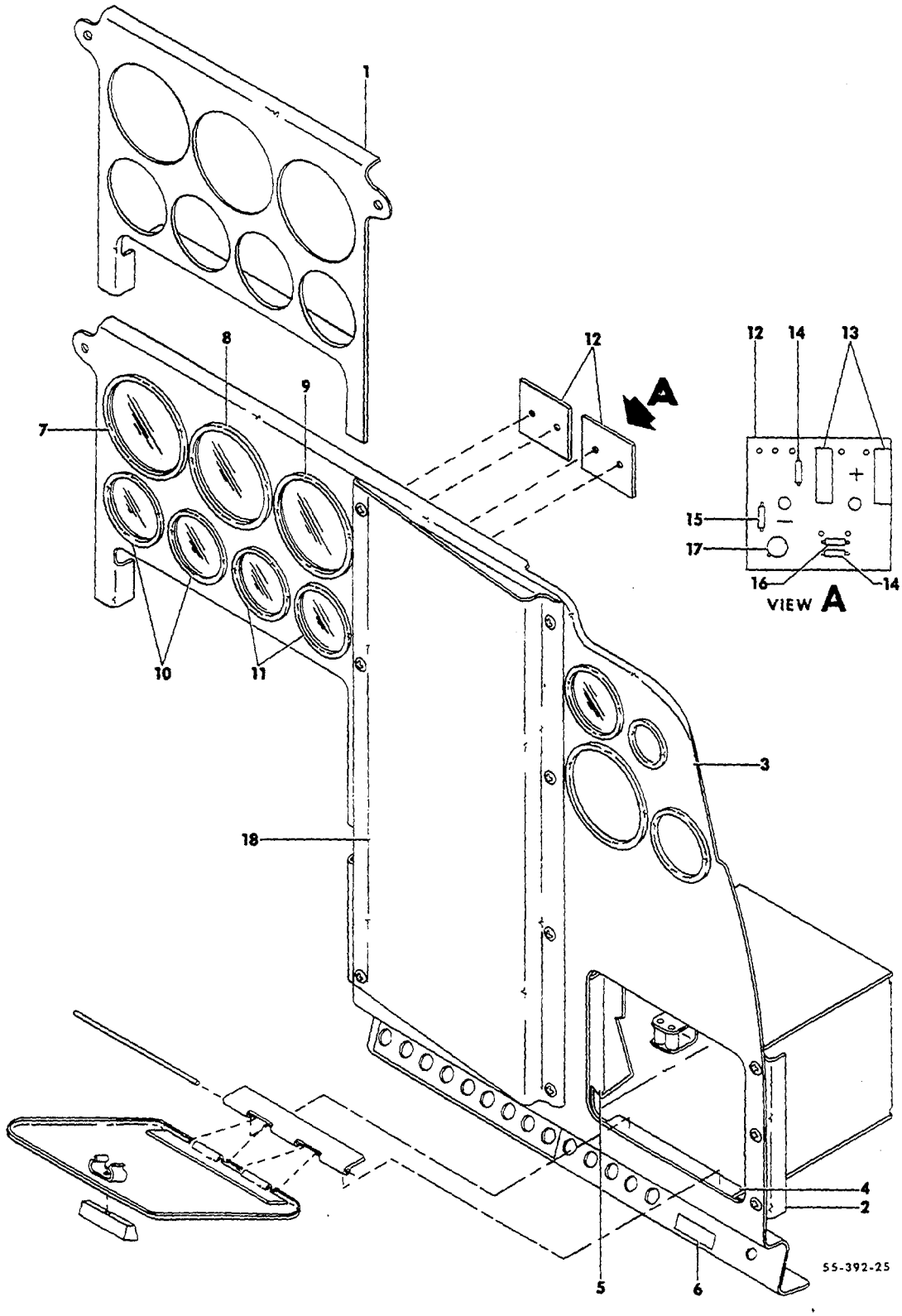

FIGURE 10-20. INSTRUMENT PANEL, FIXED
/SHEET 1 OF 3 SHEETS/

ATA CODE & INDEX NO.	PART NO.	DESCRIPTION 1 2 3 4 5 6 7	UNITS PER ASSY	USABLE ON CODE
10-20	58-324000-1	PANEL INSTL,INSTRUMENT/SINGLE/.	NP	1
	58-324001-1	PANEL INSTL,INSTRUMENT/DUAL/.	NP	1
	58-324039-7	INSTRUMENT INSTL/INTERNALLY LIGHTED/.	NP	1
- 1	58-324040	. SUPPORT,INSTRUMENT PANEL CENTER/DUAL/ . . . . /ATTACHING PARTS/	1	1
	AN520-10R	. SCREW	3	
		----*----		
- 2	96-324167-1	. BRACKET ASSY/SINGLE PANEL/.	1	1
	96-324167	. . BRACKET	1	1
	NAS1068A3	. . NUTPLATE.	3	1
	58-324037-1	. PANEL ASSY,RH INSTRUMENT/SINGLE PANEL/. . . . /ATTACHING PARTS/	1	1
	NAS387-1032	. SCREW	3	
		----*----		
- 3	58-324037-3	. . PANEL	1	1
	58-324037-5	. . PANEL/BLANK/.	1	1
- 4	95-324035-13	. . ANGLE/LOWER & UPPER/.	2	1
- 5	35-324387-5	. . ANGLE	1	1
- 6	96-554024-1	. . DECAL,COPILOT AIR	1	1
	NAS1031A3	. . NUTPLATE.	7	1
- 7	96-380014-3	. TACHOMETER.	1	1
	96-384057-3	. TACHOMETER/INTERNALLY LIGHTED/.	1	1
- 8	50-380011-17	. GAGE,MANIFOLD PRESSURE.	1	1
	96-384056-1	. GAGE,MANIFOLD PRESSURE/INTERNALLY LIGHTED/. .	1	1
- 9	96-380015-5	. GAGE,FUEL FLOW/DUAL/.	1	1
	96-384069-1	. GAGE,FUEL FLOW/DUAL,INTERNALLY LIGHTED/ . . .	1	1
- 10	58-380048-I	. LOADMETER/SUPERSEDES 96-384006-1/	2	1
	58-380048-3	. LOADMETER/INTERNALLY LIGHTED,SUPERSEDES . . . 96-384053-1/	2	1
- 11	58-380050-3	. GAGE,FUEL QUANTITY/SUPERSEDES 58-380028-1/. .	2	1
	58-380051-3	. GAGE,FUEL QUANTITY/INTERNALLY LIGHTED . . . . SUPERSEDES 96-384054-1/ /ATTACHING PARTS/	2	1
	AN507B632R	. SCREW	4	
		----*----		
	58-380022-11	. TRAY ASSY,LIGHT/INTERNALLY LIGHTED/	7	1
	58-324041	. PRINTED CIRCUIT BOARD ASSY,FUEL QUANTITY GAGE	2	1
- 12	58-324042	. . PRINTED CIRCUIT BOARD	1	1
- 13	3810P502	. . POTENTIOMETER,TRIM/5K/.	2	1
- 14	RC07GF471J	. . RESISTOR/470 OHM,1/4 W/	2	1
- 15	RC07GF302J	. . RESISTOR/3K,1/4 W/.	1	1
- 16	1N752A	. . DIODE,ZENER/5.6V/	1	1
- 17	2N4036	. . TRANSISTOR.	1	1
	2010B	. . TERMINAL.	5	1
- 18	96-340025	. PANEL,RADIO . . . . . /ATTACHING PARTS/	1	1
	NAS387-1032	. SCREW	7	
	102933D5ZM0190	. SPACER.	7	
		----*----		

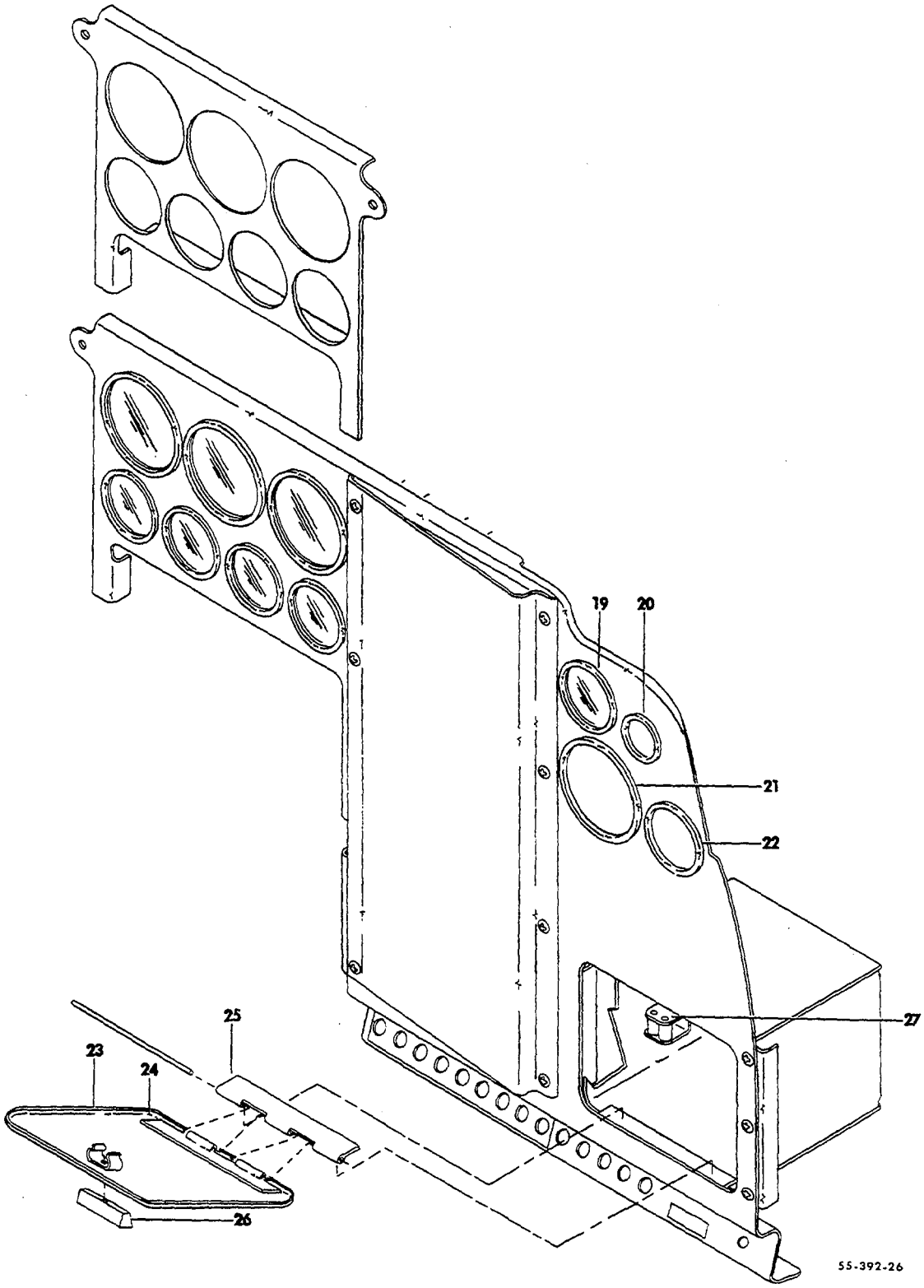

FIGURE 10-20. INSTRUMENT PANEL, FIXED
/SHEET 2 OF 3 SHEETS/

ATA CODE & INDEX NO.	PART NO.	DESCRIPTION 1 2 3 4 5 6 7	UNITS PER ASSY	USABLE ON CODE
10-20 - 19	96-384013-1	. GAGE,INSTRUMENT AIR PRESSURE.	1	2
	96-384013-3	. GAGE,INSTRUMENT AIR PRESSURE.	1	3
		/ATTACHING PARTS/		
	AN5078632R	. SCREW	4	
	AN960-6	. WASHER.	4	
	MS20365-632	. NUT	4	
		----*----		
- 20	95-324008-43	. BEZEL	1	1
- 21	50-324103-1	. BEZEL	1	1
- 22	50-324104	. BEZEL	1	1
		/ATTACHING PARTS/		
	AN5078632R	. SCREW	4	
	AN960-6	. WASHER.	4	
	MS20365-632	. NUT	4	
		----*----		
	96-324056-3	. DOOR ASSY,GLOVE COMPARTMENT	1	4
	58-530125-5	. DOOR ASSY,GLOVE COMPARTMENT	1	5
		/ATTACHING PARTS/		
	AN253-2-513	. PIN,HINGE	1	4
	105774C-ZE00328	. PIN,HINGE	1	5
		----*----		
- 23	96-324056-5	. . DOOR.	1	4
	58-530125-9	. . DOOR.	1	5
- 24	95-324038-37	. . HINGE,DOOR HALF	1	4
	35-534410-13	. . HINGE,DOOR HALF	1	5
- 25	95-324038-39	. . HINGE,GLOVE BOX HALF.	1	4
	58-530125-15	. . HINGE,GLOVE BOX HALF.	1	5
- 26	50-534481-7	. . HANDLE,GLOVE COMPARTMENT DOOR	1	4
		/ATTACHING PARTS/		
	AN530-6R	. . SCREW	2	
		----*----		
	2A12715	. HANDLE,GLOVE COMPARTMENT DOOR	1	5
		/ATTACHING PARTS/		
	AN530-10R6	. SCREW	2	
		----*----		
- 27	NO.5	. CATCH ASSY,GLOVE COMPARTMENT DOOR ROLLER. . .	1	1
		/ATTACHING PARTS/		
	AN530-6R6	. SCREW	2	5
	AN515-6R	. SCREW	2	4
	AN960-6	. WASHER.	2	4
	MS20365-6	. NUT	2	4
		----*----		

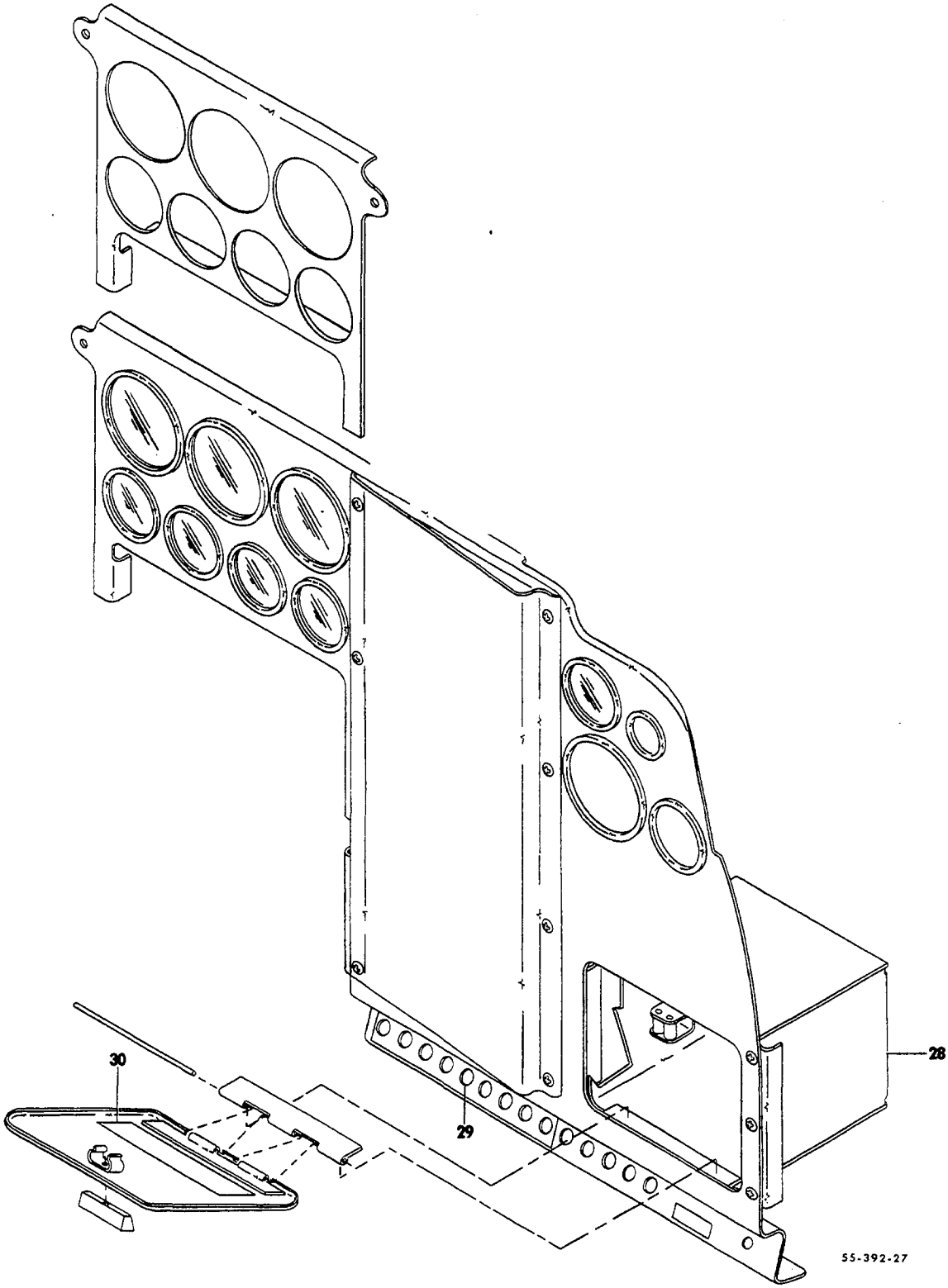

FIGURE 10-20. INSTRUMENT PANEL, FIXED
/SHEET 3 OF 3 SHEETS/

ATA CODE & INDEX NO.	PART NO.	DESCRIPTION 1 2 3 4 5 6 7	UNITS PER ASSY	USABLE ON CODE
10-20 - 28	95-324038-29	. BOX ASSY,GLOVE.	1	4
	58-530125-11	. BOX ASSY,GLOVE.	1	5
		/ATTACHING PARTS/		
	NAS384-6-6P	. SCREW	8	
	NAS391B6P	. WASHER.	8	
		----*----		
- 29	58-364026	. PLACARD,RADIO CIRCUIT BREAKERS IDENTIFICATION	1	1
- 30	58-530220-1	. PLACARD,PLASTIC CLEANING INSTRUCTIONS	1	1
	58-380069-1	ALTIMETER/STANDARD CALIBRATION/SUPERSEDES . . .	1	1
		50-380094-9 AND 58-380041-1/		
	58-380069-3	ALTIMETER/STANDARD CALIBRATION,INTERNALLY . . .	1	1
		LIGHTED/SUPERSEDES 58-380041-3/		
	50-380094-13	ALTIMETER/FEET & MILIBARS/.	1	1
	58-380045-3	ALTIMETER/FEET & MILIBARS,INTERNALLY LIGHTED, .	1	1
		SUPERSEDES 58-380011-5/		
	50-380094-11	ALTIMETER/FEET & DUAL BAROMETRIC/	1	1
	58-380044-3	ALTIMETER/FEET & DUAL BAROMETRIC,INTERNALLY . .	1	1
		LIGHTED,SUPERSEDES 58-380011-3/		
	50-380094-15	ALTIMETER/METERS & MILIBARS/.	1	1
	58-380046-3	ALTIMETER/METERS & MILIBARS,INTERNALLY LIGHTED.	1	1
		SUPERSEDES 58-380011-7/		
		/ATTACHING PARTS/		
	AN507B632R	SCREW	3	
		----*----		
	96-324139-9	PANEL ASSY,RH/SINGLE INSTRUMENT,USED WITH . . .	1	1
		DUAL AIRSPEED INDICATOR & PITOT INSTL/		
	50-384024-59	INDICATOR/DUAL AIRSPEED/.	1	1
	58-380010-3	INDICATOR/DUAL AIRSPEED,INTERNALLY LIGHTED/ . .	1	1
		/ATTACHING PARTS/		
	AN507B632R	SCREW	4	
		----*----		
	50-380010-19	TACHOMETER/DUAL ELECTRIC,WITH SYNCHROSCOPE/ . .	1	1
	96-384059-3	TACHOMETER/DUAL ELECTRIC,WITH SYNCHROSCOPE/ . .	1	1
		/INTERNALLY LIGHTED/		

CODES OF EFFECTIVITY

1 TE-768 THRU TE-942 EXCEPT TE-938
2 TE-768 THRU TE-847
3 TE-848 THRU TE-942 EXCEPT TE-938
4 TE-768 THRU TE-846
5 TE-847 THRU TE-942 EXCEPT TE-938

"END"

39-10-30
INSTRUMENT PANEL
TC-1 THRU TC-190

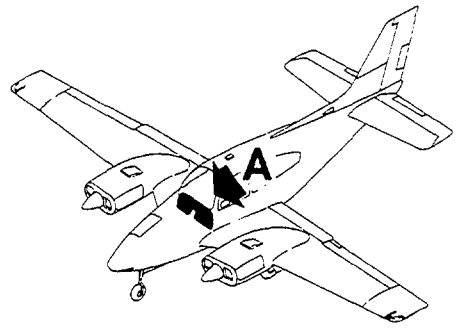

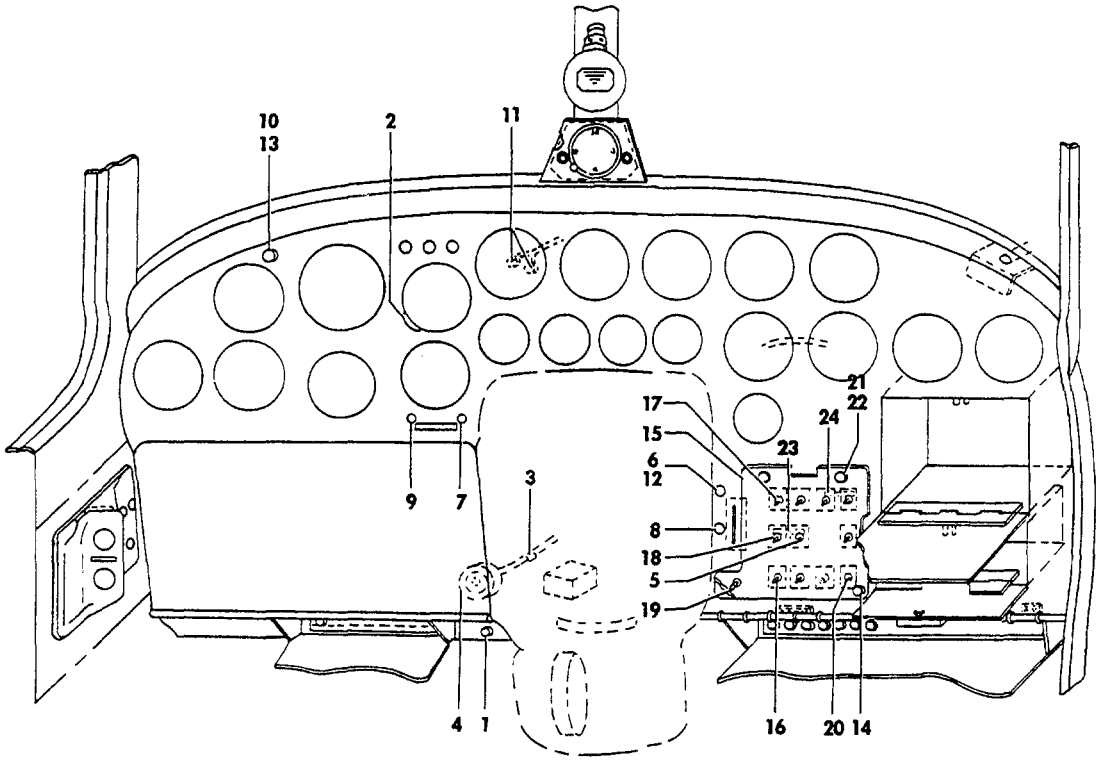

VIEW A

55-396-1

FIGURE 10-30. INSTRUMENT PANEL
/SHEET 1 OF 3 SHEETS/

SUB-SECT UNIT & ITEM NO.	PART NO.	DESCRIPTION 1 2 3 4 5 6 7	UNITS PER ASSY	USABLE ON CODE
10-30	95-324006-201	INSTRUMENT PANEL & CONTROL CONSOLE INSTL. . . .	NP	1
- 1	95-940011-5	. CONTROL ASSY,PARKING BRAKE.	1	1
	95-324006-650	. CONSOLE ASSY/SEE CHAPTER 53-25-01/.	1	1
	96-524011-601	. CONTROL COLUMN ASSY	1	1
- 2	95-324035-35	PLUG.	AR	1
	48152	BUTTON,PLUG	AR	1
	AGX5	FUSE,HEATER	2	1
- 3	624	FLASHER,LANDING GEAR WARNING HORN	1	1
- 4 R	169-380021-11	HORN,STALL WARNING.	1	1
		/ATTACHING PARTS/		
	AN515-632-12	SCREW	4	
	AN960-6	WASHER.	4	
		----*----		
	D7270-6-5	BREAKER,UPPER ROTATING BEACON CIRCUIT	1	1
	D7270-6-10	BREAKER,UPPER & LOWER ROTATING BEACON CIRCUIT .	1	1
- 5	D7270-6-10	BREAKER,CIRCUIT/OPTIONAL/	1	1
	95-360011-635	WIRE ASSY,FUSELAGE HARNESS.	1	2
	96-360011-653	WIRE ASSY,FUSELAGE HARNESS.	1	3
	95-360011-636	. WIRE ASSY,FUSELAGE HARNESS.	1	2
	96-360011-652	. WIRE ASSY,FUSELAGE HARNESS.	1	3
	4524	. . BLOCK,FUSE.	1	1
	3 OHM 10 WATT	. . RESISTOR.	1	1
		/ATTACHING PARTS/		
	AN515-8-36	. . SCREW	1	
	3052	. . WASHER,FIBER.	2	4
	3052	. . WASHER,FIBER.	6	5
		----*----		
- 6	VM911M2H	. . LIGHT ASSY,LANDING GEAR SWITCH.	1	1
- 7	VM911M2H	. . LIGHT ASSY,FLAP POSITION.	1	1
- 8	VM911M3H	. . LIGHT ASSY,LANDING GEAR SWITCH.	1	1
- 9	VM911M3H	. . LIGHT ASSY,FLAP POSITION.	1	1
	0320-351	. . RHEOSTAT.	1	1
- 10	VM912M6	. . LIGHT ASSY,STALL WARNING.	1	1
- 11	AN3106A14S7S	. . PLUG,DUAL TACHOMETER CONNECTOR.	2	1
- 12	AN3140-327	. . LAMP,LANDING GEAR INDICATOR	2	1
- 13	AN3121-313	. . LAMP,STALL WARNING INDICATOR.	1	1
	25 OHM 10 WATT	. . RESISTOR.	1	4
	50 OHM 25 WATT	. . RESISTOR.	2	5
- 14	VM912-4	. . LIGHT ASSY,COWL FLAP INDICATOR.	1	1
	357004	. . BLOCK,FUSE.	1	6
	3AG	. . FUSE.	4	6
	95-324006-201	INSTRUMENT PANEL & CONTROL CONSOLE INSTL. . . .	NP	1
	95-324007-11	. PANEL ASSY,CIRCUIT BREAKER.	1	1
- 15	95-324035-5	. . PANEL	1	1
- 16	D7270-6-5	. . BREAKER,CIRCUIT	4	1
- 17	D7270-6-15	. . BREAKER,CIRCUIT	2	1
- 18	D7270-6-20	. . BREAKER,CIRCUIT	1	1
- 19	8906K1019	. . SWITCH.	1	1
- 20	8906K762	. . SWITCH.	2	1
- 21	MS25010-3A	. . LIGHT	4	1
- 22	100696S-YP003	. . SPACER.	4	1
- 23	114931-1-2	. . BAR,BUS	1	1
- 24	114931-1-4	. . BAR,BUS	2	1

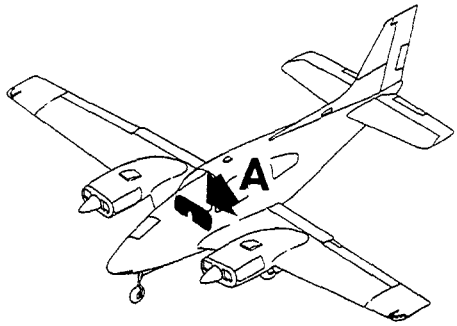

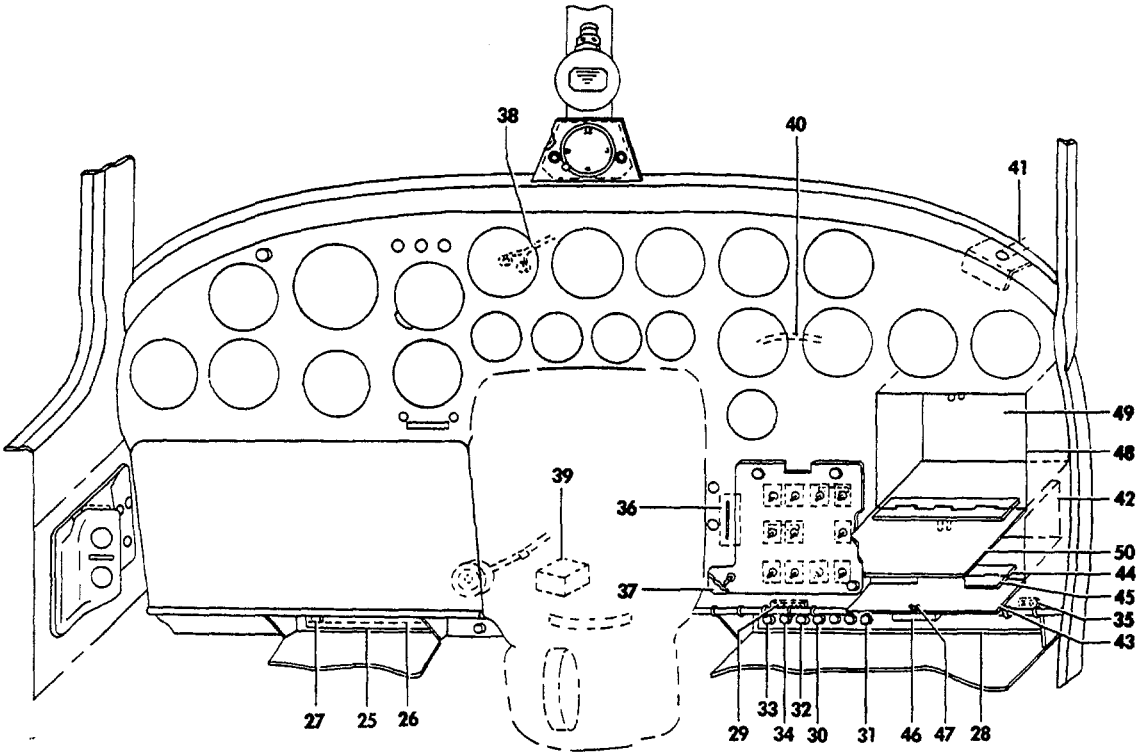

VIEW **A**

55-396-2

FIGURE 10-30. INSTRUMENT PANEL
/SHEET 2 OF 3 SHEETS/

ATA CODE & INDEX NO.	PART NO.	DESCRIPTION 1 2 3 4 5 6 7	UNITS PER ASSY	USABLE ON CODE
10-30	95-324006-115	. CHANNEL ASSY,INSTRUMENT SUB PANEL LH.	1	1
		/ATTACHING PARTS/		
	AN520-6	. SCREW	14	
	NAS179-6-05-004	. SPACER.	14	
		----*----		
- 25	95-324006-111	. . CHANNEL	1	1
- 26	114931-1-7	. . STRIP,TERMINAL.	1	1
		/ATTACHING PARTS/		
	AN936A816	. . WASHER.	AR	
		----*----		
- 27	8801K13	. . SWITCH.	1	1
	95-324006-117	. CHANNEL ASSY,INSTRUMENT SUB PANEL RH.	1	1
- 28	95-324006-113	. . CHANNEL	1	1
- 29	114931-1-3	. . BAR,BUS	1	1
- 30	PSM3N	. . BREAKER,CIRCUIT	1	1
- 31	PSM5N	. . BREAKER,CIRCUIT	8	1
- 32	D7271-1-5	. . BREAKER,CIRCUIT	1	1
- 33	PSM30N	. . BREAKER,CIRCUIT	1	1
- 34	PSM15N	. . BREAKER,CIRCUIT	1	1
- 35	114931-1-9	. . BAR,BUS	1	1
	95-324012-1	. SWITCH ASSY,LANDING GEAR.	1	1
- 36	AN3022-3	. . SWITCH,LANDING GEAR	1	1
- 37	95-324045-1	PANEL,EDGE LIGHTED.	1	1
- 38	95-360011-643	HARNESS,TACHOMETER LH	1	1
	95-360011-644	HARNESS,TACHOMETER RH	1	1
	95-360000SA2	HORN ASSY,WARNING	1	1
- 39	319	. HORN.	1	1
	100 OHM 10 WATT	. RESISTOR.	1	1
- 40	96-360011-639	WIRE ASSY,ENGINE OIL TEMPERATURE LH	1	1
	96-360011-640	WIRE ASSY,ENGINE OIL TEMPERATURE RH	1	1
- 41	95-554017-35	ROD ASSY,SHOCK MOUNT LH	1	1
	95-554017-37	ROD ASSY,SHOCK MOUNT RH	1	1
		/ATTACHING PARTS/		
	AN507-632R	SCREW	2	
		----*----		
	A-321	. MOUNT,SHOCK	1	1
- 42	95-324038-23	BOX ASSY,MAP.	1	1
	95-324038-59	DOOR ASSY,MAP BOX	1	1
		/ATTACHING PARTS/		
	AN253-2-513	PIN,HINGE	1	
		----*----		
- 43	95-324038-61	. DOOR.	1	1
- 44	95-324038-39	. HINGE,HALF.	1	1
- 45	95-324038-37	. HINGE,HALF.	1	1
- 46	35-324204	. KNOB.	1	1
		/ATTACHING PARTS/		
	AN530-6R7	. SCREW	1	
		----*----		
- 47	5	. STRIKE.	1	1
	5	. CATCH,MAP BOX	1	1
	95-324038-29	BOX ASSY,GLOVE.	1	1
- 48	95-324038-31	. BODY,GLOVE BOX.	1	1
- 49	35-324033-4	. END,GLOVE BOX	1	1
	95-324038-63	DOOR ASSY,GLOVE BOX	1	1
		/ATTACHING PARTS/		
	AN253-2-513	PIN,HINGE	1	
		----*----		
- 50	95-324038-65	. DOOR.	1	1

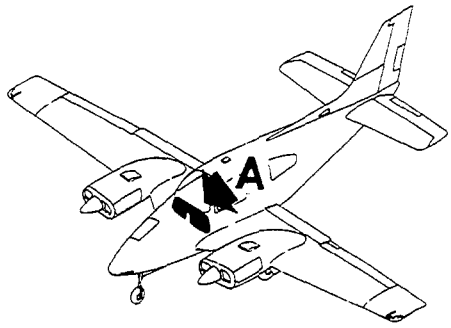

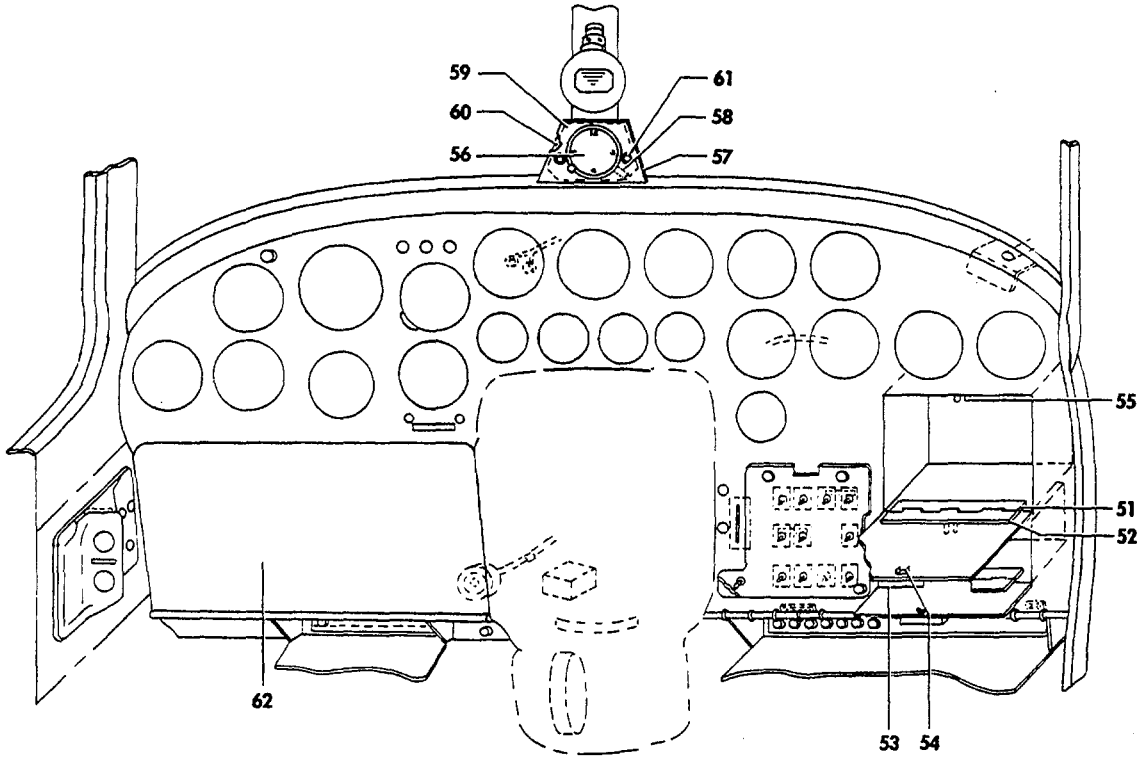

VIEW **A**

55-396-3

FIGURE 10-30. INSTRUMENT PANEL
/SHEET 3 OF 3 SHEETS/

ATA CODE & INDEX NO.	PART NO.	DESCRIPTION 1 2 3 4 5 6 7	UNITS PER ASSY	USABLE ON CODE
10-30 - 51	95-324038-39	. HINGE,HALF.	1	1
- 52	95-324038-37	. HINGE,HALF.	1	1
- 53	35-324204	. KNOB.	1	1
		/ATTACHING PARTS/		
	AN530-6R7	. SCREW	1	
		----*----		
- 54	5	. STRIKE.	1	1
- 55	5	CATCH,GLOVE BOX	1	1
		/ATTACHING PARTS/		
	AN515-6R	SCREW	2	
	AN960-6	WASHER.	2	
	MS20365-624	NUT	2	
		----*----		
- 56	50-380013-5	CLOCK,EIGHT DAY/SUPERSEDES 35-380004-5/	1	1
		/ATTACHING PARTS/		
	AN526-632-8	SCREW	2	
	AN93686	WASHER.	2	
		----*----		
- 57	95-530012-1	COVER,CLOCK	1	1
		/ATTACHING PARTS/		
	AN515-832R	SCREW	3	
	MS20365-832	NUT	3	
		----*----		
- 58	95-530012-601	WIRE ASSY,CLOCK	1	1
- 59	95-530012-3	PLATE	1	1
- 60	95-530012-5	PANEL	1	1
- 61	MS25010-3A	LIGHT	2	1
- 62	95-324054-1	PANEL,BLANK RADIO	1	1

CODES OF EFFECTIVITY

1	TC-1 THRU TC-190	2	TC-2 THRU TC-23
3	TC-1 AND TC-24 THRU TC-190	4	TC-1 THRU TC-172
5	TC-173 THRU TC-190	6	TC-34 THRU TC-172

"END"

39-14-01
FLOATING INSTRUMENT PANEL
TC-1 THRU TC-190

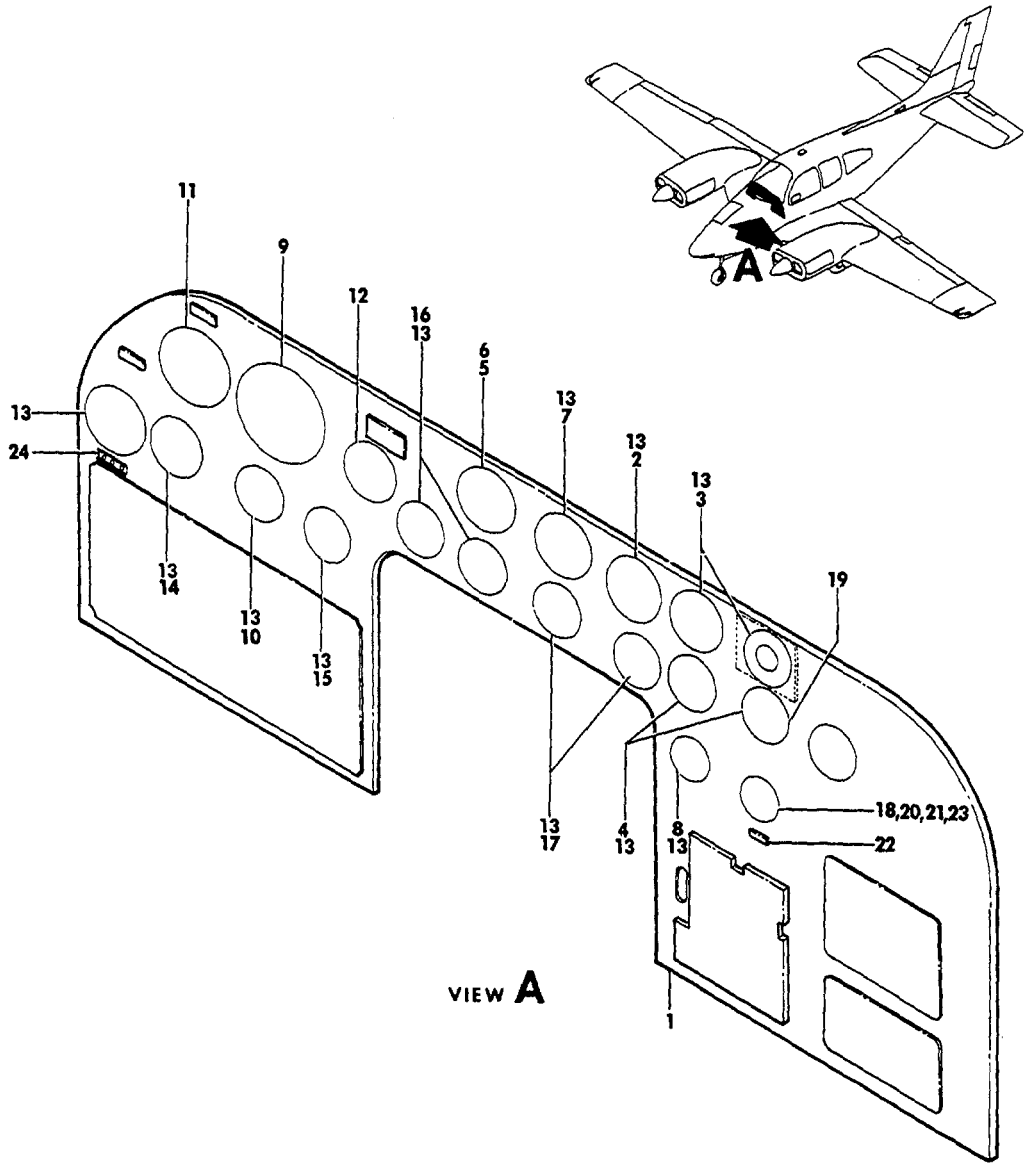

55-391-15

FIGURE 14-01. INSTRUMENT PANEL, FLOATING
/SHEET 1 OF 2 SHEETS/

ATA CODE & INDEX NO.	PART NO.	DESCRIPTION 1 2 3 4 5 6 7	UNITS PER ASSY	USABLE ON CODE
14-01	95-324007-7	PANEL ASSY,FLOATING	NP	1
	95-324005-43	. PANEL ASSY,BLANK.	1	1
- 1	95-324035-3	. . PANEL,BLANK	1	1
- 2	96-380024	. INDICATOR,FUEL PRESSURE	1	1
		/ATTACHING PARTS/		
	AN5078632R14	. SCREW	4	
		----*----		
- 3	50-324103-1	. BEZEL,INSTRUMENT.	2	1
		/ATTACHING PARTS/		
	AN5078632R14	. SCREW	4	
		----*----		
- 4	96-380016	. GAGE,ENGINE/CYLINDER HEAD & OIL TEMP,OIL.	2	1
		PRESSURE/		
		/ATTACHING PARTS/		
	AN5078632R14	. SCREW	4	
		----*----		
- 5	96-380014-1	. TACHOMETER,ENGINE/STANDARD/	1	1
	50-380010-21	. TACHOMETER,ENGINE DUAL ELECTRIC/WITH.	1	1
		SYNCHROSCOPE,OPTIONAL/		
		/ATTACHING PARTS/		
	AN5078632R14	. SCREW	4	
		----*----		
- 6	A8970-1-327	. LIGHT,POST/OPTIONAL/.	1	1
- 7	50-380011-17	. INDICATOR,MANIFOLD PRESSURE	1	1
		/ATTACHING PARTS/		
	AN5078632R14	. SCREW	4	
		----*----		
- 8	95-324035-55	. GAGE,SUCTION.	1	1
	95-324035-53	. GAGE,SUCTION/USED WITH SP-3 & T-3 AUTOPILOT/.	1	1
		/ATTACHING PARTS/		
	AN5078632R14	. SCREW	4	
		----*----		
- 9	95-324011-53	. GYRO,HORIZON/USED WITHOUT AUTOPILOT/.	1	1
- 10	95-324035-59	. GYRO,DIRECTIONAL/USED WITHOUT AUTOPILOT/.	1	1
- 11	50-384024-15	. INDICATOR,AIRSPEED.	1	1
- 12	95-324035-61	. ALTIMETER	1	1
	G371-02-2A	. ALTIMETER,SECOND/IN METERS,OPTIONAL/.	1	1
- 13	A8970-1-327	. LIGHT,POST/OPTIONAL/.	AR	1
- 14	50-380024	. INDICATOR,TURN & BANK	1	1
- 15	95-324035-65	. INDICATOR,RATE OF CLIMB	1	1
- 16	95-380018	. GAGE,FUEL	2	1
- 17	1500859	. AMMETER	2	1
- 18	M1-986	. METER,ENGINE HOUR/24 VOLT/OPTIONAL/	1	1
- 19	M1-672	. SWITCH,PRESSURE/OPTIONAL/	1	1
	MC0B50635-3	. PLACARD,ENGINE HOURS/OPTIONAL/.	1	1
- 20	A8970-1-327	. LIGHT,POST/OPTIONAL/.	1	1
- 21	M1-990	. METER,FLIGHT HOUR/OPTIONAL/	1	1
		/ATTACHING PARTS/		
	AN5078632	. SCREW	4	
		----*----		
- 22	96-324022-3	. PLACARD,FLIGHT HOURS/OPTIONAL/.	1	1
- 23	A8970-1-327	. LIGHT,POST/OPTIONAL/.	1	1
- 24	95-324061	. PLACARD,RADIO CONTROL SWITCH.	1	1

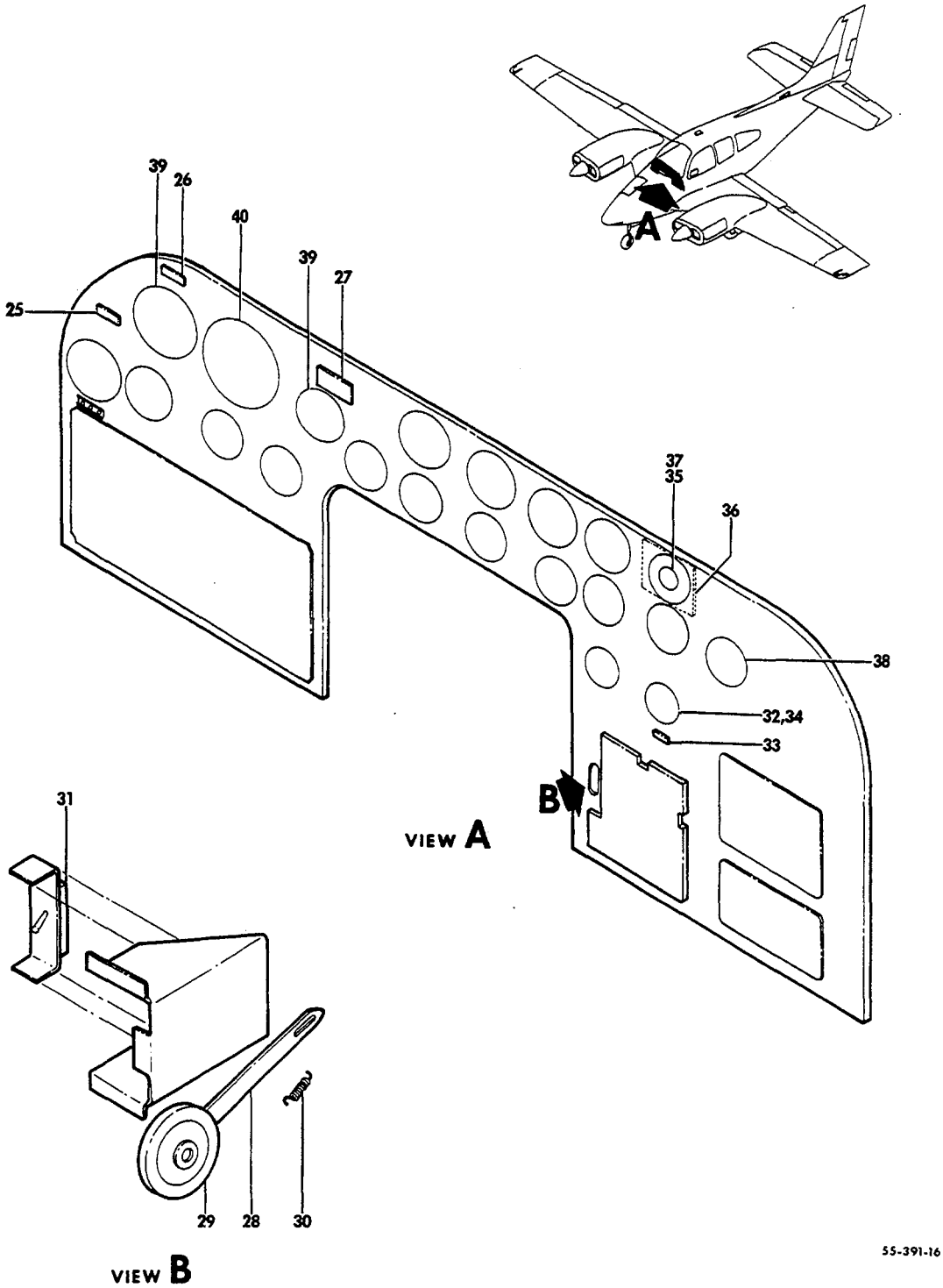

FIGURE 14-01.INSTRUMENT PANEL,FLOATING
/SHEET 2 OF 2 SHEETS/

SUB-SECT UNIT & ITEM NO.	PART NO.	DESCRIPTION 1 2 3 4 5 6 7	UNITS PER ASSY	USABLE ON CODE
14-01 - 25 R	95-324005-33	. PLATE,RADIO CALL.	1	1
		/ATTACHING PARTS/		
	AN530-2R4	. SCREW	2	
		----*----		
- 26	95-324060	. PLACARD,STALL WARNING LIGHT	1	1
- 27	95-324063	. PLACARD,MARKER BEACON LIGHTS.	1	1
	95-324012	. SWITCH ASSY,LANDING GEAR.	1	1
	95-324012-13	. . ARM ASSY,LANDING GEAR,SWITCH.	1	1
		/ATTACHING PARTS/		
	AN3-4	. . BOLT.	2	
	100696X-ZC002	. . SPACER.	1	
	100696X-ZC004	. . SPACER.	1	
	AN960-10	. . WASHER.	2	
	100951S062ZL	. . WASHER.	2	
	AN310-3	. . NUT	2	
	AN380-2-3	. . PIN,COTTER.	2	
		----*----		
- 28	95-324012-11	. . BRAZE ASSY.	1	1
- 29	95-324012-13	. . KNOB.	2	1
- 30	734-183864	. . SPRING.	1	1
- 31	AN3022-3	. . SWITCH,LANDING GEAR	1	1
		/ATTACHING PARTS/		
	AN515-6-4	. . SCREW	2	
		----*----		
- 32	3D1133-2	GAGE,DE-ICER/OPTIONAL/.	1	1
		/ATTACHING PARTS/		
	AN507B632R	SCREW	4	
		----*----		
- 33	3D1313	PLACARD,DE-ICER/OPTIONAL/	1	1
- 34	A8970-1-327	LIGHT,POST/OPTIONAL/.	1	1
- 35	50-384001-31	GAGE,ANTI-ICER QUANTITY/OPTIONAL/	1	1
		/ATTACHING PARTS/		
	AN507B632R	SCREW	3	
		----*----		
	CB3105A	BREAKER,CIRCUIT/QUANTITY GAGE/.	1	1
- 36	96-960006-9	ADAPTER,ANTI-ICER GAGE/OPTIONAL/.	1	1
- 37	A8970-1-327	LIGHT,POST/OPTIONAL/.	1	1
- 38	96-324010-7	INDICATOR,AIRSPEED/OPTIONAL/.	1	1
- 39	A8970-2-327	LIGHT,POST.	4	1
- 40	A8975-1-327	LIGHT,POST.	2	1

CODES OF EFFECTIVITY

1 TC-1 THRU TC-190

39-14-10
FLOATING INSTRUMENT PANEL
TC-191 THRU TC-1607,TE-1 THRU TE-451

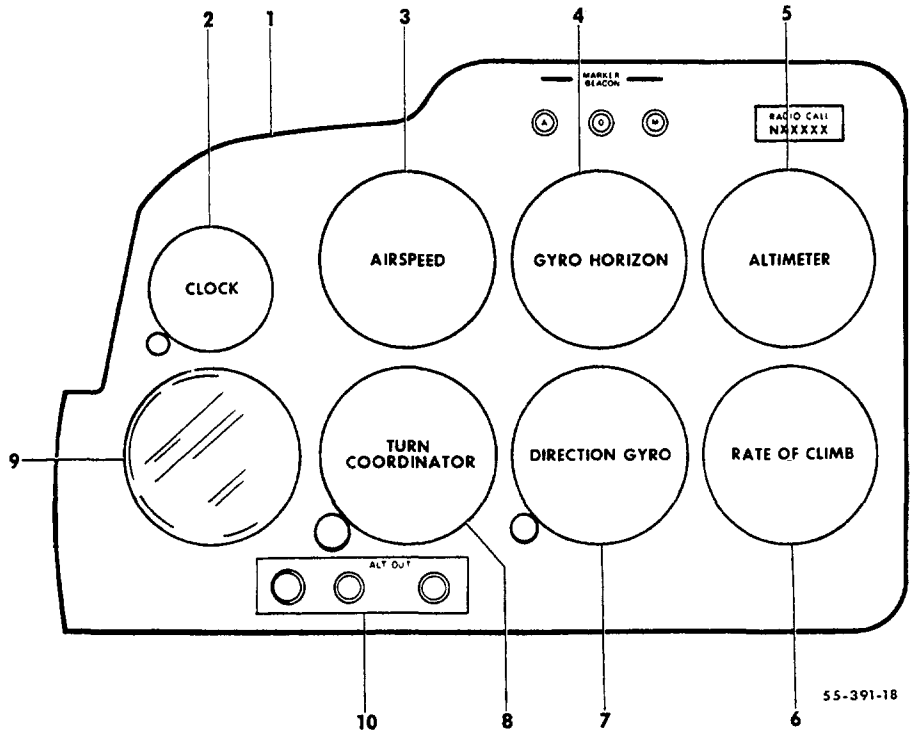

FIGURE 14-10. INSTRUMENT PANEL, FLOATING
/SHEET 1 OF 2 SHEETS/

SUB-SECT UNIT & ITEM NO.	PART NO.	DESCRIPTION 1 2 3 4 5 6 7	UNITS PER ASSY	USABLE ON CODE
14-10	96-324029	PANEL INSTL,INSTRUMENT/WITH GENERATOR/.	NP	1
	96-324029-9	PANEL INSTL,INSTRUMENT/WITH ALTERNATOR/	NP	2
	96-324056	PANEL INSTL,INSTRUMENT.	NP	3
	R 95-324005	PANEL INSTL,DUAL INSTRUMENT	NP	4
	96-324006	PANEL INSTL,DUAL INSTRUMENT	NP	5
	96-324032-1	. PANEL ASSY,LH FLOATING INSTRUMENT	1	6
	96-324032-5	. PANEL ASSY,LH FLOATING INSTRUMENT	1	7
	96-324122-5	. PANEL ASSY,LH FLOATING INSTRUMENT	1	8
	96-324122-7	. PANEL ASSY,LH FLOATING INSTRUMENT/ALTERNATOR/	1	9
	96-324122-9	. PANEL ASSY,LH FLOATING INSTRUMENT/GENERATOR/.	1	9
	96-324060	. PANEL ASSY,FLOATING INSTRUMENT.	1	3
	96-324005-29	. PANEL ASSY,RH BLANK FLOATING INSTRUMENT/DUAL/	1	6
	R 95-324005-43	. PANEL ASSY,RH BLANK FLOATING INSTRUMENT/DUAL/	1	10
	96-324033	. . PANEL ASSY,FLOATING LH.	1	6
	96-324033-17	. . PANEL ASSY,FLOATING LH.	1	11
	96-324033-23	. . PANEL ASSY,FLOATING LH.	1	12
	96-324123-1	. . PANEL ASSY,FLOATING LH.	1	8
- 1	96-324123-13	. . PANEL ASSY,FLOATING LH/ALTERNATOR/.	1	9
	96-324123-17	. . PANEL ASSY,FLOATING LH/GENERATOR/	1	9
	96-324123-21	. . PANEL ASSY,BLANK LH FLOATING.	1	13
	96-324033-3	. . PANEL ASSY,BLANK RH FLOATING.	1	6
	96-324033-13	. . PANEL ASSY,BLANK RH FLOATING.	1	14
- 2	50-380013-5	. . CLOCK	1	15
	50-384024-41	. . INDICATOR,AIRSPEED.	1	16
- 3	50-384024-49	. . INDICATOR,AIRSPEED.	1	17
	50-384024-19	. . INDICATOR,AIRSPEED.	1	3
	35-380043-1	. . GYRO,HORIZON.	1	18
- 4	50-384202	. . GYRO,HORIZON.	1	13
	50-384203	. . GYRO,HORIZON/ALTERNATE FOR 50-384202/ . . .	1	13
	35-380037-1	. . ALTIMETER	1	19
- 5	58-380069-1	. . ALTIMETER/SUPERSEDES 58-380041-1/	1	20
	35-380044-1	. . INDICATOR,RATE OF CLIMB	1	6
- 6	50-384073	. . INDICATOR,RATE OF CLIMB	1	21
	96-324033-23	. . INDICATOR,RATE OF CLIMB	1	22
	35-380039-1	. . GYRO,DIRECTIONAL.	1	18
- 7	50-384204	. . GYRO,DIRECTIONAL.	1	13
	50-384205	. . GYRO,DIRECTIONAL/ALTERNATE FOR 50-384204/ .	1	13
	50-380024	. . INDICATOR,TURN & BANK	1	23
- 8	601-009-980	. . COORDINATOR,TURN/MODEL TC100/24/.	1	24
		/ATTACHING PARTS/		
	AN507B632R	. . SCREW/INSTRUMENT ATTACHING/	AR	25
	FH6C16CP-L05BN	. . SCREW/INSTRUMENT ATTACHING/	AR	9
		----*----		
- 9	50-324103-1	. . BEZEL	1	15
		/ATTACHING PARTS/		
	AN507B632R	. . SCREW	4	25
	FH6C16CP-L05BN	. . SCREW	4	9
	MS20365-632	. . NUT	4	
		----*----		
	95-324063	. . PLACARD,MARKER BEACON LIGHTS.	1	25
- 10	96-324200-5	. . PLACARD,LH & RH ALTERNATOR OUT.	1	9

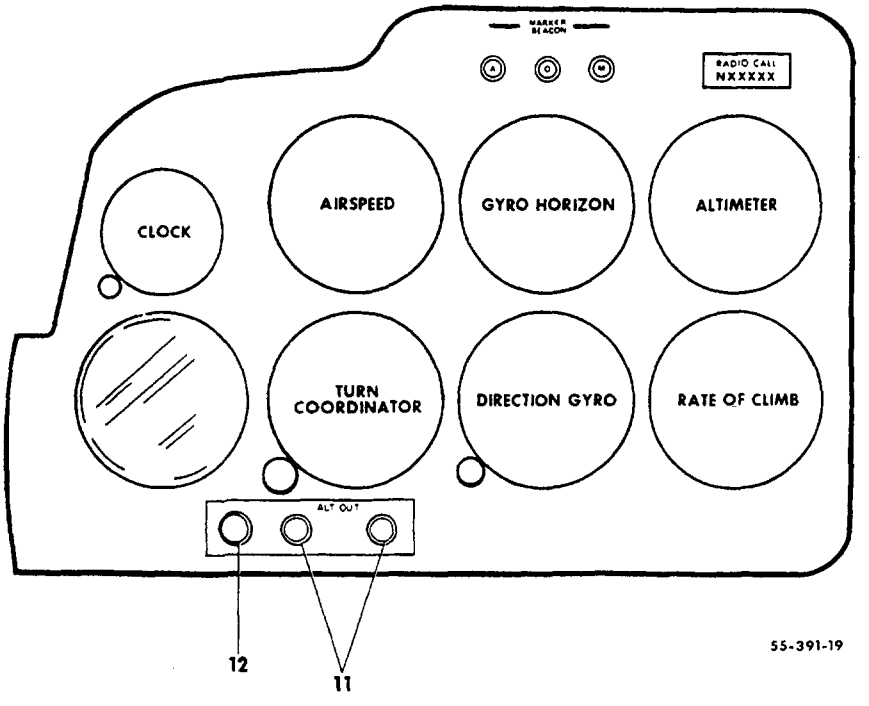

FIGURE 14-10.INSTRUMENT PANEL,FLOATING
/SHEET 2 OF 2 SHEETS/

ATA CODE & INDEX NO.	PART NO.	DESCRIPTION 1 2 3 4 5 6 7	UNITS PER ASSY	USABLE ON CODE
14-10 - 11	855S1R2DS-P6	. . LIGHT ASSY,ALTERNATOR OUT	2	9
	327	. . BULB,ALTERNATOR OUT LIGHT	2	9
- 12	30-15	. . SWITCH,ANNUNICATOR LIGHTS PRESS TO TEST . .	1	9
	30C1032	. . NUT,SWITCH FACE	1	9
	58-380069-1	ALTIMETER,RH/STD CALIBRATION,SUPERSEDES . . . . 58-380041-1 ALTIMETER/	1	15
	58-380045-1	ALTIMETER,RH/FEET & MILIBARS/	1	15
	58-380044-1	ALTIMETER,RH/FEET & DUAL BAROMETRIC SCALE/. . .	1	15
	58-380046-1	ALTIMETER,RH/METERS & MILIBARS/	1	15
	58-380041-3	ALTIMETER,RH/STD CALIBRATION,WEDGE LIT/	1	26
	58-380045-3	ALTIMETER,RH/FEET & MILIBARS,WEDGE LIT/	1	26
	58-380044-3	ALTIMETER,RH/FEET & DUAL BAROMETRIC SCALE/. . . WEDGE LIT/	1	26
	58-380046-3	ALTIMETER,RH/METERS & MILIBARS,WEDGE LIT/ . . .	1	26
	96-324010-7	INDICATOR,RH AIRSPEED	1	27
	50-384024-15	INDICATOR,RH AIRSPEED	1	28
	50-384024-41	INDICATOR,RH AIRSPEED	1	29
	50-384024-19	INDICATOR,RH AIRSPEED	1	3
	50-384024-49	INDICATOR,RH AIRSPEED	1	17
	58-380010-5	INDICATOR,RH AIRSPEED/WEDGE LIT/.	1	26
	58-380015-3	CLOCK/INTERNALLY LIGHTED/	1	26
	58-380013-1	GYRO HORIZON/WEDGE LIT/	1	26
	58-380013-3	GYRO,HORIZON/WEDGE LIT,ALTERNATE. . . . . FOR 58-380013-1/	1	26
	58-380018-1	INDICATOR,VERTICAL SPEED/WEDGE LIT/	1	26
	58-380014-1	GYRO,DIRECTIONAL/WEDGE LIT/	1	26
	58-380014-3	GYRO,DIRECTIONAL/WEDGE LIT,ALTERNATE. . . . . FOR 58-380014-1/	1	26
	58-380020-3	COORDINATOR,TURN/WEDGE LIT/	1	26
	58-380022-11	LIGHT TRAY ASSY,WEDGE LIT INSTRUMENTS	7	26
	18-380022-1	GYRO,HORIZON/VACUUM/.	1	3
	18-380021-1	GYRO,DIRECTIONAL/VACUUM/.	1	3

CODES OF EFFECTIVITY

1 TC-191 THRU TC-1607
2 TC-502 THRU TC-1607
3 TE-1 THRU TE-451
4 TC-191 THRU TC-501
5 TC-502 THRU TC-1607 TE-1 THRU TE-451
6 TC-191 THRU TC-779
7 TC-780 THRU TC-1156
8 TC-1157 THRU TC-1402
9 TC-1403 THRU TC-1607
10 TC-780 THRU TC-1402
11 TC-780 THRU TC-940
12 TC-941 THRU TC-1156 TE-1 THRU TE-451
13 TC-1157 THRU TC-1607
14 TC-780 THRU TC-1156 TE-1 THRU TE-451
15 TC-191 THRU TC-1607 TE-1 THRU TE-451
16 TC-191 THRU TC-954
17 TC-955 THRU TC-1607
18 TC-191 THRU TC-1156 TE-1 THRU TE-451
19 TC-191 THRU TC-1004
20 TC-1005 THRU TC-1607 TE-1 THRU TE-451
21 TC-780 THRU TC-940, TC-1157 THRU TC-1607 TE-1 THRU TE-451
22 TC-941 THRU TC-1156
23 TC-191 THRU TC-990 TE-1 THRU TE-101
24 TC-991 THRU TC-1607 TE-102 THRU TE-451
25 TC-191 THRU TC-1402 TE-1 THRU TE-451
26 TC-1299 THRU TC-1607
27 TC-191 THRU TC-461
28 TC-462 THRU TC-501
29 TC-502 THRU TC-954

"END"

39-14-20
FLOATING INSTRUMENT PANEL
TE-452 THRU TE-767

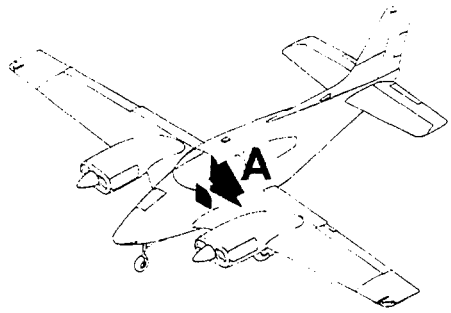

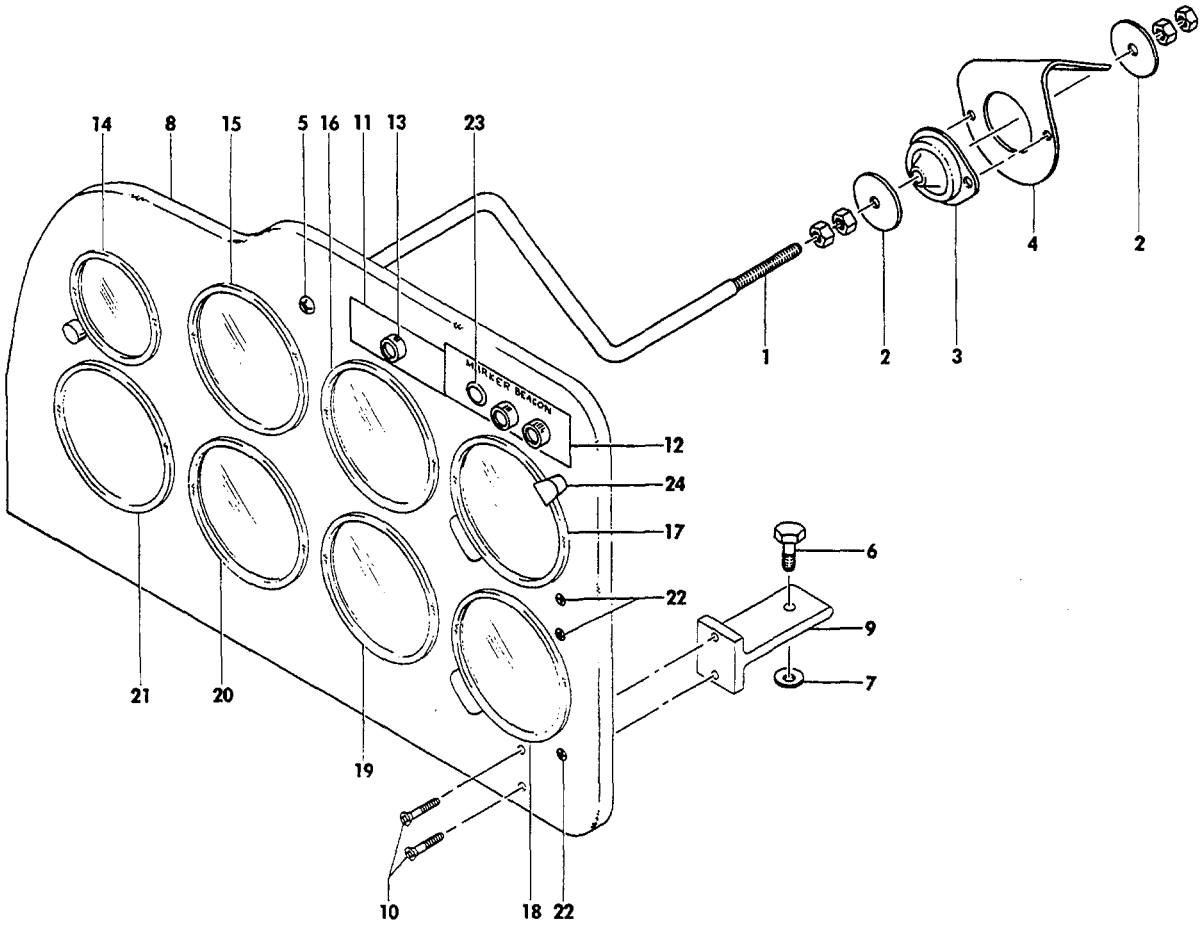

VIEW A

FIGURE 14-20. INSTRUMENT PANEL, FLOATING

ATA CODE & INDEX NO.	PART NO.	DESCRIPTION 1 2 3 4 5 6 7	UNITS PER ASSY	USABLE ON CODE
14-20	96-324008	PANEL INSTL,INSTRUMENT.	NP	1
- 1	96-324008-1	. ROD,PANEL SUPPORT	1	1
		/ATTACHING PARTS/		
- 2	AN8013D2	. WASHER.	2	
	AN316-4R	. NUT	4	
		----*----		
- 3	150PDL12	. MOUNT,SHOCK	1	1
		/ATTACHING PARTS/		
	AN515-8	. SCREW	2	
	AN960-8	. WASHER.	2	
	MS20365-832	. NUT	2	
		----*----		
- 4	96-324008-3	. BRACKET,SHOCK MOUNT	1	1
	96-324122	. PANEL ASSY,FLOATING	1	1
		/ATTACHING PARTS/		
- 5	NAS387-1032	. SCREW	1	
- 6	AN4-12A/M/	. BOLT.	2	
- 7	AN8013D2	. WASHER.	2	
	MS20365-428	. NUT	2	
		----*----		
- 8	96-324123-1	. . PANEL ASSY,FLOATING	1	1
	96-324033-3	. . . PANEL,BLANK	1	1
- 9	96-324075	. . . SUPPORT,FLOATING PANEL.	2	1
		/ATTACHING PARTS/		
- 10	AN509-10-9	. . . SCREW	2	
		----*----		
- 11	96-324140	. . PLACARD,COWL FLAP POSITION INDICATOR. . . .	1	1
- 12	95-324063	. . PLACARD,MARKER BEACON LIGHTS.	1	1
- 13	VM911M4	. . LIGHT ASSY,FLAP POSITION.	1	1
	327	. . . BULB,INDICATOR LIGHT.	1	1
- 14	50-380013-5	. . CLOCK	1	1
- 15	50-384024-19	. . INDICATOR,AIRSPEED.	1	1
- 16	96-380039	. . INDICATOR,HORIZON GYRO.	1	1
- 17	50-380094-9	. . ALTIMETER	1	1
- 18	50-384073	. . INDICATOR,VERTICAL SPEED.	1	1
- 19	18-380021-3	. . INDICATOR,DIRECTIONAL GYRO.	1	1
- 20	1680	. . TURN COORDINATOR.	1	1
- 21	50-324103-1	. . BEZEL,INSTRUMENT CUTOUT	1	1
		/ATTACHING PARTS/		
- 22	AN507B632R	. . SCREW	4	
		----*----		
- 23	48152	. . BUTTON,PLUG/UNUSED MARKER BEACON HOLES/ . .	AR	1
	520-5408	. . SWITCH,PRESS TO TEST.	1	1
	PM7	SWITCH,PRESS TO TEST ALTERNATOR/MOUNTS ON . . .	1	1
		GLARESHIELD/		
- 24	A8970B2-327	POST LIGHT/BLUE/.	AR	1
	A8970-2-327	POST LIGHT/RED/	AR	1
	327	. BULB,POST LIGHT	1	1

CODES OF EFFECTIVITY

1 TE-452 THRU TE-767

"END"

39-14-30
FLOATING INSTRUMENT PANEL
TE-768 THRU TE-942 EXCEPT TE-938

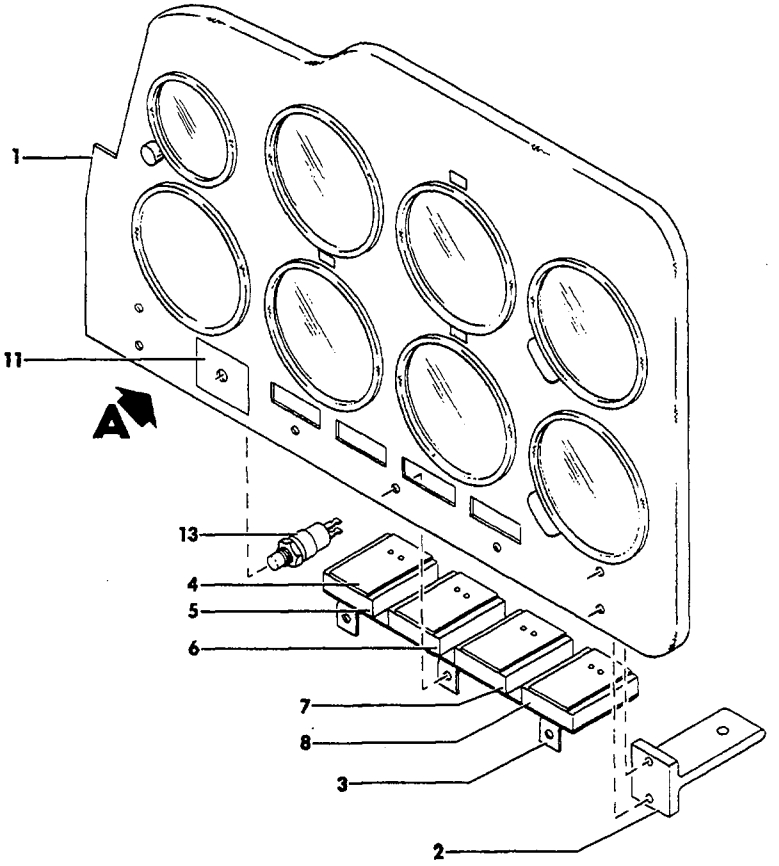

VIEW A

55-391-20

FIGURE 14-30. INSTRUMENT PANEL, FLOATING
/SHEET 1 OF 2 SHEETS/

ATA CODE & INDEX NO.	PART NO.	DESCRIPTION 1 2 3 4 5 6 7	UNITS PER ASSY	USABLE ON CODE
14-30	58-324000-1	PANEL INSTL,INSTRUMENT/SINGLE/.	NP	1
	58-324001-1	PANEL INSTL,INSTRUMENT/DUAL/.	NP	1
	58-324039-7	INSTRUMENT INSTL/INTERNALLY LIGHTED/.	NP	1
	96-324175-1	. PANEL ASSY,LH FLOATING INSTRUMENT	1	2
	96-324175-9	. PANEL ASSY,LH FLOATING INSTRUMENT	1	3
	58-324001-9	. PANEL ASSY,RH FLOATING INSTRUMENT	1	1
	35-324451-21	. . PANEL ASSY,LH FLOATING.	1	2
	35-324451-67	. . PANEL ASSY,LH FLOATING.	1	3
	35-324451-45	. . PANEL ASSY,LH FLOATING/BLANK/	1	1
	96-324191	. . PANEL ASSY,RH FLOATING.	1	1
		/ATTACHING PARTS/		
	AN507-832	. . SCREW,UPPER	1	
	J6984-121	. . MOUNT,UPPER SHOCK	1	
	AN340-8	. . NUT,UPPER	1	
	AN4-12A/M/	. . BOLT,LOWER.	2	
	MS25083-18C6	. . JUMPER,BONDING,LOWER OUTBD.	1	
	AN8013D2	. . WASHER,LOWER.	2	
	MS20365-428	. . NUT,LOWER	2	
		----*----		
- 1	35-324451-33	. . . PANEL,LH.	1	2
	35-324451-65	. . . PANEL,LH.	1	3
	35-324451-47	. . . PANEL,LH/BLANK/	1	1
	96-324191-1	. . . PANEL,RH.	1	1
- 2	96-324075	. . . SUPPORT ASSY.	2	1
		/ATTACHING PARTS/		
	AN509-10R9	. . . SCREW	2	
		----*----		
	96-324185-1	. . LIGHT ASSY,ANNUNCIATOR.	1	2
		/ATTACHING PARTS/		
	AN507-832R5	. . SCREW	3	
		----*----		
- 3	96-324185-13	. . . BRACKET ASSY,MOUNTING	1	2
- 4	96-324185-21	. . . PLATE	4	2
- 5	351-21878-003	. . . LIGHT,LH ALTERNATOR/OUT/.	1	2
- 6	351-21878-004	. . . LIGHT,RH ALTERNATOR/OUT/.	1	2
- 7	351-21878-001	. . . LIGHT,LH COWL FLAP/OPEN/.	1	2
- 8	351-21878-002	. . . LIGHT,RH COWL FLAP/OPEN/.	1	2
		/ATTACHING PARTS/		
	AN515-3R10	. . . SCREW	2	
	AN935-3L	. . . WASHER.	2	
	AN340-3	. . . NUT	2	
		----*----		
- 9	855S1R2DS-P6HS	. . LIGHT,ALTERNATOR/OUT,BLACK FILL/.	2	3
- 10	855S1A4DS-P6HS	. . LIGHT,COWL FLAP/OPEN,BLACK FILL/.	2	3
- 11	35-324470-1	. . DECAL,WARNING LIGHTS/PRESS TO TEST/	1	2
- 12	96-324200-1	. . PLACARD,WARNING LIGHTS/PRESS TO TEST/ . . .	1	3
- 13	30-15	. . SWITCH,ANNUNCIATOR LIGHTS/PRESS TO TEST/. .	1	1
		/ATTACHING PARTS/		
	30C1023	. . NUT,FACE.	1	
		----*----		

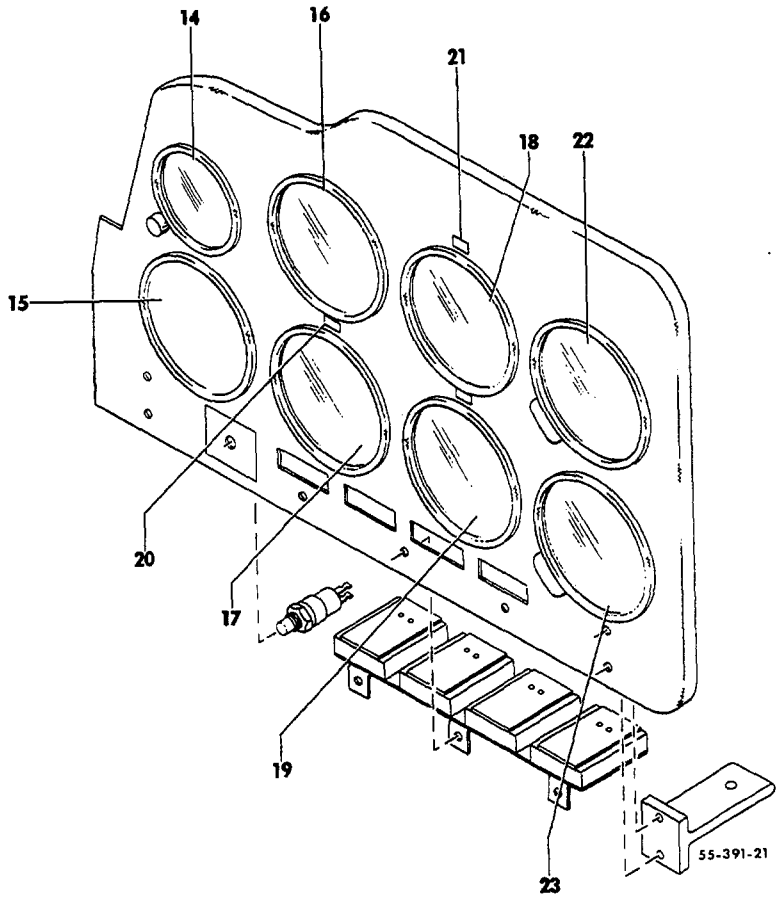

FIGURE 14-30.INSTRUMENT PANEL,FLOATING
/SHEET 2 OF 2 SHEETS/

ATA CODE & INDEX NO.	PART NO.	DESCRIPTION 1 2 3 4 5 6 7	UNITS PER ASSY	USABLE ON CODE
14-30 - 14	50-380013-5	. . CLOCK	1	1
	50-380015-3	. . CLOCK/INTERNALLY LIGHTED/	1	1
		/ATTACHING PARTS/		
	AN507B632R	. . SCREW	2	
		----*----		
	96-384013-1	. . GAGE,PRESSURE/RH PANEL/	1	1
- 15	50-324103-1	. . BEZEL/1 REQUIRED LH,7 REQUIRED RH/.	8	1
- 16	50-384024-19	. . INDICATOR,AIRSPEED.	1	1
	58-380010-1	. . INDICATOR,AIRSPEED/INTERNALLY LIGHTED/. . .	1	1
- 17	601-009-980	. . COORDINATOR,TURN/MODEL TC100, ...	1	1
		SUPERSEDES 1680/		
	58-380020-3	. . COORDINATOR,TURN/INTERNALLY LIGHTED/. . . .	1	1
	96-384063-1	. . INDICATOR,TURN & BANK/INTERNALLY LIGHTED/. .	1	1
- 18	50-384202	. . GYRO,HORIZON.	1	1
	50-384203	. . GYRO,HORIZON/ALTERNATE FOR 50-384202/ . . .	1	1
	58-380013-1	. . GYRO,HORIZON/INTERNALLY LIGHTED/.	1	1
	58-380013-3	. . GYRO,HORIZON/INTERNALLY LIGHTED,.	1	1
		ALTERNATE FOR 58-380013-1/		
- 19	50-384204	. . GYRO,DIRECTIONAL.	1	1
	50-384205	. . GYRO,DIRECTIONAL/ALTERNATE FOR 50-384204/ .	1	1
	58-380014-1	. . GYRO,DIRECTIONAL/INTERNALLY LIGHTED/. . . .	1	1
	58-380014-3	. . GYRO,DIRECTIONAL/INTERNALLY LIGHTED,. . . .	1	1
		ALTERNATE FOR 58-380014-1/		
		/ATTACHING PARTS/		
	AN507B632R	. . SCREW	4	4
	FH6C20CP-L058N	. . SCREW	4	5
		----*----		
- 20	60-324075-11	. . DECAL/DC/	1	1
- 21	60-324075-7	. . DECAL/AIR/.	2	1
- 22	58-380069-1	. . ALTIMETER/SUPERSEDES 58-380041-1/	1	1
	58-380069-3	. . ALTIMETER/INTERNALLY LIGHTED, ...	1	1
		SUPERSEDES 58-380041-3/		
- 23	50-384073	. . INDICATOR,VERTICAL SPEED.	1	1
	58-380018-1	. . INDICATOR,VERTICAL SPEED/INTERNALLY LIGHTED	1	1
		/ATTACHING PARTS/		
	AN507B632R	. . SCREW	3	
		----*----		
	58-380022-11	. . TRAY ASSY,LIGHT/INTERNALLY.	6	1
		LIGHTED INSTRUMENTS/		

CODES OF EFFECTIVITY

1 TE-768 THRU TE-942 EXCEPT TE-938
2 TE-768 THRU TE-873
3 TE-874 THRU TE-942 EXCEPT TE-938
4 TE-768 THRU TE-846
5 TE-847 THRU TE-942 EXCEPT TE-938

"END"

39-14-40
INSTRUMENT SUBPANEL
TC-191 THRU TC-1607,TE-1 THRU TE-451

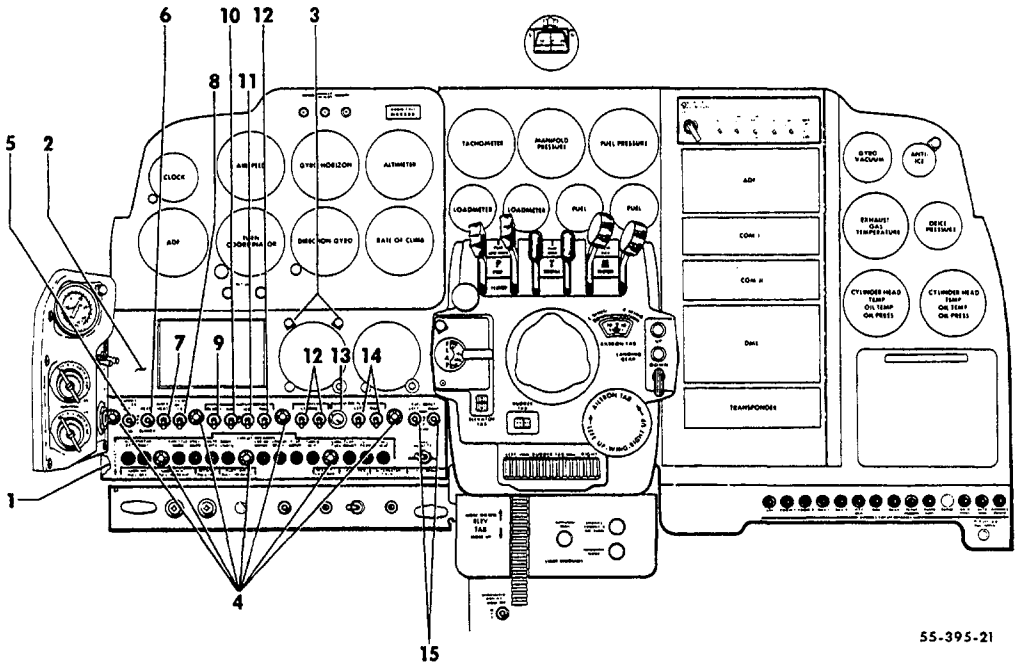

FIGURE 14-40. INSTRUMENT SUBPANEL
/SHEET 1 OF 3 SHEETS/

SUB-SECT UNIT & ITEM NO.	PART NO.	DESCRIPTION 1 2 3 4 5 6 7	UNITS PER ASSY	USABLE ON CODE
14-40	96-324029	PANEL INSTL,INSTRUMENT/WITH GENERATOR/.	NP	1
	96-324029-9	PANEL INSTL,INSTRUMENT/WITH ALTERNATOR/	NP	2
	96-324056	PANEL INSTL,INSTRUMENT.	NP	3
	96-324005	PANEL INSTL,DUAL INSTRUMENT	NP	4
	96-324006	PANEL INSTL,DUAL INSTRUMENT	NP	5
	96-324034	. PANEL,LH SUBPANEL EDGELIT	1	6
	96-324034-1	. PANEL,LH SUBPANEL EDGELIT	1	7
	96-324034-17	. PANEL,LH SUBPANEL EDGELIT/WITH GENERATOR/ . .	1	8
- 1	96-324062-3	. PANEL,LH SUBPANEL EDGELIT/WITH ALTERNATOR/. .	1	5
	96-324039	. PANEL ASSY,LH SUB	1	9
	96-324039-3	. PANEL ASSY,LH SUB	1	10
	96-324039-5	. PANEL ASSY,LH SUB	1	3
	96-380016	. . GAGE,ENGINE/CYLINDER HEAD TEMP,OIL TEMP & . OIL PRESSURE/	2	1
	96-380016-1	. . GAGE,ENGINE/CYLINDER HEAD TEMP,OIL TEMP & . OIL PRESSURE/	2	3
	50-324103-1	. . BEZEL . . . . . /ATTACHING PARTS/	2	8
	AN507B632R	. . SCREW/ATTACHES INSTRUMENTS & BEZELS/. . . .	AR	
	MS20365-632	. . NUT/ATTACHES BEZELS/.	4	
		----*----		
	96-324031	. . PANEL,SUB/STANDARD/	1	9
- 2	96-324074	. . PANEL,SUB/STANDARD/	1	11
	96-500006-3	. . PANEL,SUB/WITH TACT AIR T3AL AUTOPILOT/ . .	1	12
	96-500024-15	. . PANEL,SUB/WITH H14 AUTOPILOT/	1	12
	96-500005-7	. . PANEL,SUB/WITH B4 AUTOPILOT/.	1	12
	96-500042-3	. . PANEL,SUB/WITH B7 AUTOPILOT/.	1	12
	A8970-1-327	. . LIGHT ASSY,INSTRUMENT POST.	8	13
- 3	A8970B2-327	. . LIGHT ASSY,INSTRUMENT POST.	8	14
	MS25010-3A	. . LIGHT ASSY,SUBPANEL EDGE.	7	13
	327	. . BULB,SUBPANEL EDGE LIGHT.	7	13
- 4	A7165-4	. . LIGHT ASSY,SUBPANEL EDGE.	7	14
	MS25010-3A	. . LIGHT ASSY/ALTERNATE FOR A7165-4/	7	14
- 5	35-380053-657	. . SWITCH ASSY,SURFACE DEICER.	1	12
	35-380053-654	. . SWITCH ASSY,IGNITER STANDBY	1	15
	35-380053-7	. . SWITCH,IGNITER STANDBY.	1	16
	D7271-1-20	. . CIRCUIT BREAKER,HEAT & BLOWER	1	9
- 6	35-380053-651	. . SWITCH ASSY,HEATER BLOWER	1	11
- 7	113-205-102	. . SWITCH,PITOT HEAT	1	12
- 8	113-215-102	. . SWITCH,3 BLADE PROP DEICE	1	12
	CB3115A	. . SWITCH,2 BLADE PROP DEICE	1	12
- 9	CB3110A	. . SWITCH,ROTATING BEACON.	1	12
- 10	113-205-102	. . SWITCH,NAVIGATION LIGHTS.	1	12
	35-380053-651	. . SWITCH ASSY,NAVIGATION & STROBE LIGHTS. . .	1	17
- 11	CB3105A	. . SWITCH,ICE LIGHTS	1	12
- 12	113-210-102	. . SWITCH,TAXI & LANDING LIGHTS.	3	12
- 13	VM911M-4	. . SWITCH,COWL FLAP OPEN	1	12
- 14	35-380053-652	. . SWITCH,LH & RH COWL FLAP.	2	12
	113-205-102	. . SWITCH,FUEL BOOST PUMP HIGH-LOW	2	18
- 15	R 35-380053-3	. . SWITCH,FUEL BOOST PUMP HIGH-LOW	2	19
	114931-1-11	. . STRIP,UPPER TERMINAL.	1	9
	114931-1-10	. . STRIP,UPPER TERMINAL.	1	11
	114931-1-4	. . STRIP,LH TERMINAL	1	12
	114931-1-3	. . STRIP,RH TERMINAL	1	12
	114931-1-13	. . STRIP,LOWER TERMINAL.	1	12

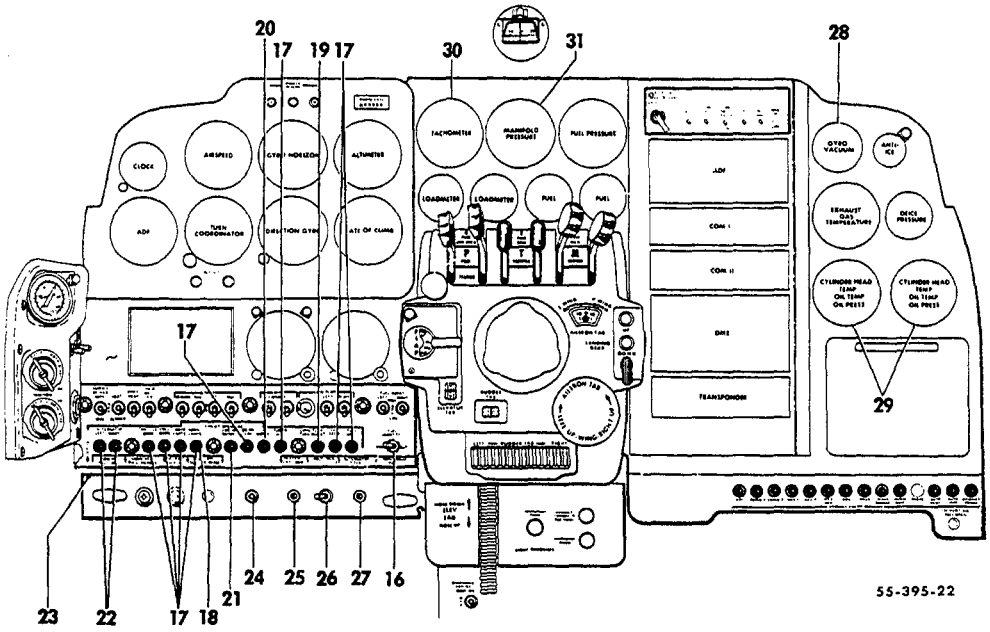

FIGURE 14-40. INSTRUMENT SUBPANEL
/SHEET 2 OF 3 SHEETS/

ATA CODE & INDEX NO.	PART NO.	DESCRIPTION 1 2 3 4 5 6 7	UNITS PER ASSY	USABLE ON CODE
14-40 - 16	35-380053-653	. . SWITCH ASSY,FUEL QUANTITY	1	12
- 17	CB2305A	. . CIRCUIT BREAKER/FUEL GAGE,OIL TEMP,TURN & . SLIP,LDG GR RELAY,CABIN LIGHTS,INSTRUME LIGHTS,STALL & THROTTLE WARNING/	8	12
- 18	CB2310A	. . CIRCUIT BREAKER,CABIN & STROBE LIGHTS . . .	1	12
	CB2305A	. . CIRCUIT BREAKER,COWL FLAP	1	18
- 19	CB2310A	. . CIRCUIT BREAKER,COWL FLAP & FUEL BOOST PUMP	1	19
- 20	CB2315A	. . CIRCUIT BREAKER,FLAP MOTOR.	1	12
- 21	CB2330A	. . CIRCUIT BREAKER,LDG GEAR MOTOR.	1	12
	CB2330A	. . CIRCUIT BREAKER,25 AMP GENERATOR.	2	1
- 22	109-250-104	. . CIRCUIT BREAKER,50 AMP ALTERNATOR OR 40 AMP GENERATOR	2	
- 23	PSM3N	. . CIRCUIT BREAKER,CIGARETTE LIGHTER	1	12
- 24	D7270-5-3	. . CIRCUIT BREAKER,ELECTRIC TRIM	1	17
- 25	D7271-1-20	. . CIRCUIT BREAKER,HEATER.	1	11
	MDL3	. . FUSE,HEATER	1	12
- 26	35-380053-653	. . SWITCH ASSY,VOLTAGE REGULATOR	1	12
- 27	7274-2-10	. . CIRCUIT BREAKER,ALTERNATOR FIELD.	1	5
	96-324039-7	PANEL ASSY,LH SUB/WITH WEDGE LIT INSTRUMENTS/ .	1	17
	96-384052-1	GAGE,GYRO VACUUM/WEDGE LIT/	1	20
- 28	96-384052-3	GAGE,GYRO VACUUM/WEDGE LIT/	1	21
- 29	96-384058-1	GAGE,ENGINE/WEDGE LIT/.	2	17
- 30	96-384057-1	TACHOMETER/WEDGE LIT/	1	17
- 31	96-384056-1	GAGE,MANIFOLD PRESSURE/WEDGE LIT/	1	17

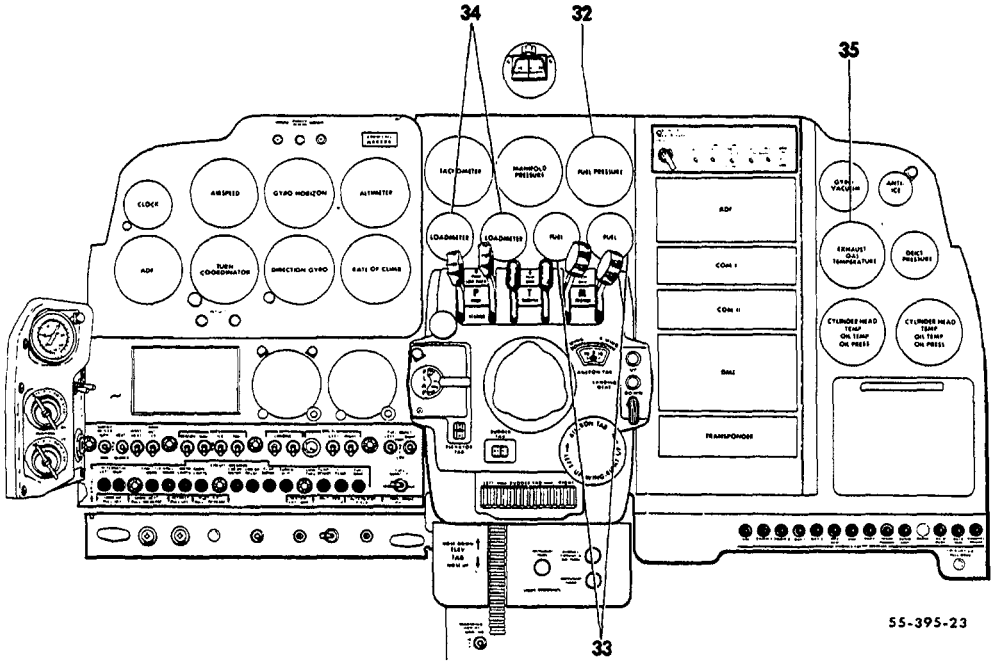

FIGURE 14-40. INSTRUMENT SUBPANEL
/SHEET 3 OF 3 SHEETS/

SUB-SECT UNIT & ITEM NO.	PART NO.	DESCRIPTION 1 2 3 4 5 6 7	UNITS PER ASSY	USABLE ON CODE
14-40 - 32	96-384055-1	GAGE,FUEL PRESSURE/WEDGE LIT/	1	17
- 33	96-384054-1	GAGE,FUEL QUANTITY/WEDGE LIT/	2	.17
- 34	96-384053-1	LOADMETER/WEDGE LIT/.	2	17
	58-380022-11	LIGHT TRAY ASSY,WEDGE LIT INSTRUMENTS	11	17
	50-380010-21	TACHOMETER,DUAL ELECTRIC/WITH SYNCHROSCOPE/ . .	1	1
	96-384059-1	TACHOMETER,DUAL ELECTRIC/WITH SYNCHROSCOPE. . . WEDGE LIT/	1	17
	MODEL 136	INDICATOR,MIXTURE CONTROL	1	22
	205-10A	INDICATOR,MIXTURE CONTROL	1	23
- 35	205-10AL	INDICATOR,MIXTURE CONTROL/INTERNALLY LIGHTED/ .	1	17
	58-380042-1	INDICATOR,ENGINE HOURS.	1	12
	58-380043-1	INDICATOR,FLIGHT HOURS.	1	12
	R 95-940011-5	CONTROL,PARKING BRAKE	1	3

CODES OF EFFECTIVITY

1 TC-191 THRU TC-1607
2 TC-502 THRU TC-1607
3 TE-1 THRU TE-451
4 TC-191 THRU TC-501
5 TC-502 THRU TC-1607
TE-1 THRU TE-451
6 TC-191 THRU TC-452,
EXCEPT TC-251
7 TC-251,
TC-453 THRU TC-954
8 TC-955 THRU TC-1607
9 TC-191 THRU TC-779
10 TC-780 THRU TC-1607
11 TC-780 THRU TC-1607
TE-1 THRU TE-451
12 TC-191 THRU TC-1607
TE-1 THRU TE-451
13 TC-191 THRU TC-1042
TE-1 THRU TE-451
14 TC-1403 THRU TC-1607
15 TC-191 THRU TC-420
16 TC-421 THRU TC-1607
TE-1 THRU TE-451
17 TC-1299 THRU TC-1607
18 TC-191 THRU TC-420
EXCEPT TC-251,TC-350
19 TC-251,TC-350
TC-421 THRU TC-1607
TE-1 THRU TE-451
20 TC-1299 THRU TC-1428
21 TC-1429 THRU TC-1607
22 TC-191 THRU TC-604
TE-1 THRU TE-451
23 TC-605 THRU TC-1607

"END"

39-14-50
INSTRUMENT SUBPANEL
TE-452 THRU TE-767

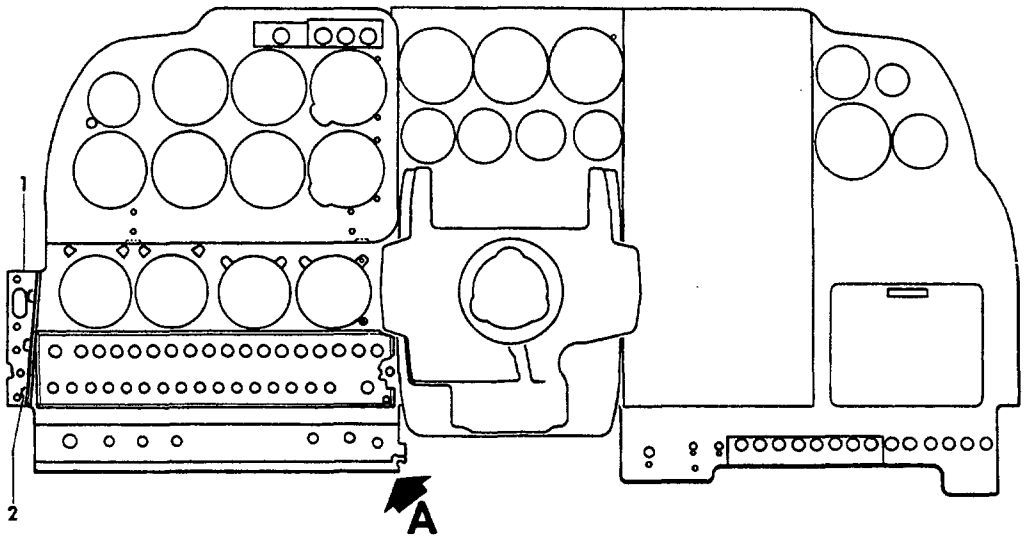
1
2
A

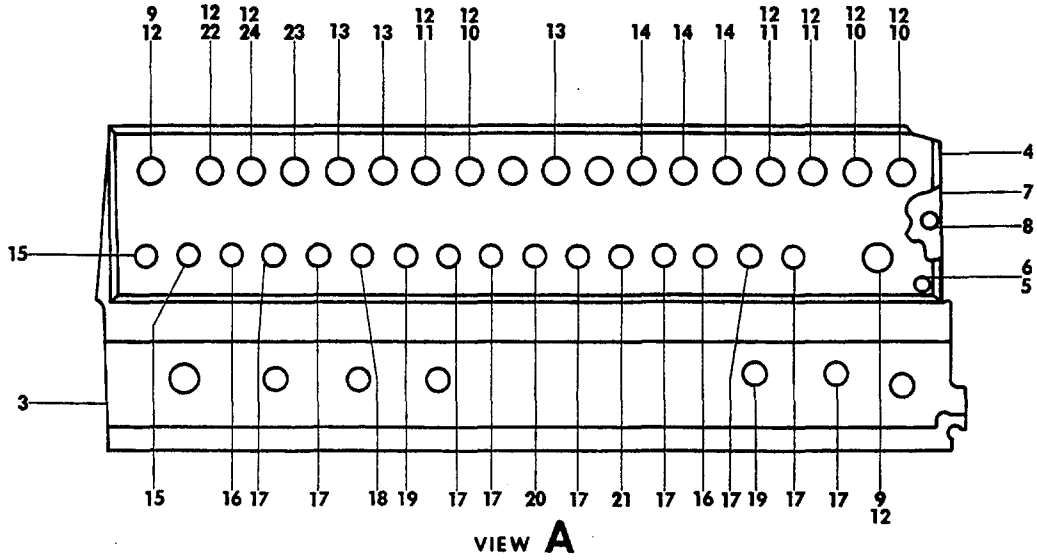
9 12
12 22
12 24
23
13
13
12 11
12 10
13
14
14
14
12 11
12 11
12 10
12 10
4
7
8
6
5
15
3
15
16 17
17
18 19
17
17
20
17
21
17
16 17 19
17
17
9 12
VIEW A

55-395-24

ATA CODE & INDEX NO.	PART NO.	DESCRIPTION 1 2 3 4 5 6 7	UNITS PER ASSY	USABLE ON CODE
14-50	96-324008	PANEL INSTL,INSTRUMENT.	NP	1
- 1	96-324029-3	. ANGLE,PANEL SUPPORT . . . . . /ATTACHING PARTS/	1	1
- 2	AN509-10	. SCREW	3	
	AN960-10	. WASHER.	3	
	MS20365-1032	. NUT	3	
		----*----		
	96-324125-1	. SUBPANEL ASSY	NP	1
- 3	96-324126-1	. . PANEL,SUB/USE WITHOUT AUTOPILOT/.	1	1
	96-500009-87	. . PANEL,SUB/USE WITH H-14 AUTOPILOT/.	1	1
	96-500039-11	. . PANEL,SUB/USE WITH B-5 AUTOPILOT/	1	1
- 4	96-324127-3	. . PANEL,EDGE LIGHT. . . . . /ATTACHING PARTS/	1	1
- 5	AN515B632R	. . SCREW	8	
- 6	35-324086	. . INSERT,THREADED	8	
		----*----		
- 7	96-364055-601	. . BOARD ASSY,EDGE LIGHT PRINTED CIRCUIT . . .	1	1
- 8	D138-100-5T1	. . . BULB,BLUE/SUPERSEDES D158-100-5T/	1	1
- 9	35-380053-9	. . SWITCH,FUEL GAGE & VOLTAGE REGULATOR. . . .	2	1
- 10	35-380053-3	. . SWITCH,HEATOR BLOWER & BOOST PUMP	3	1
- 11	35-380053-1	. . SWITCH,HEATER IGNITOR & COWL FLAP	3	1
- 12	35-380052	. . KNOB,SWITCH	10	1
- 13	113-205-102	. . CIRCUIT BREAKER,PITOT HEAT,NAVIGATION . . . LIGHTS & RAM AIR DEICER /SUPERSEDES CB3105C/	3	1
- 14	CB3100C	. . CIRCUIT BREAKER,LANDING & TAXI LIGHTS . . . /SUPERSEDES 113-210-102/	3	1
- 15	109-250-104	. . CIRCUIT BREAKER,ALTERNATOR.	2	1
- 16	CB2310A	. . CIRCUIT BREAKER,ALTERNATOR FIELD,COWL FLAP. AND FUEL BOOST PUMP/SUPERSEDES 109-210-	2	1
- 17	CB2305A	. . CIRCUIT BREAKER,THROTTLE WARNING,STALL. . . WARNING,INSTRUMENT LIGHTS,CABIN LIGHTS, LANDING GEAR RELAY,TURN & SLIP,OIL TEMPERATURE,FUEL GAGE & SURFACE DEICER /SUPERSEDES 109-205-104/	9	1
- 18	111-203-101	. . CIRCUIT BREAKER,CIGARETTE LIGHTER	1	2
	109-205-101	. . CIRCUIT BREAKER,CIGARETTE LIGHTER	1	3
- 19	109-220-104	. . CIRCUIT BREAKER,HEATER.	1	1
- 20	CB2330A	. . CIRCUIT BREAKER,LANDING GEAR MOTOR. . . . . /SUPERSEDES 109-230-104/	1	1
- 21	109-215-104	. . CIRCUIT BREAKER,FLAP MOTOR. . . . . /SUPERSEDES CB2315A/	1	1
- 22	35-380053-5	. . SWITCH,SURFACE DEICER	1	1
- 23	D7270-6-5	. . CIRCUIT BREAKER,PROPELLER ALCOHOL ANTI-ICE.	1	1
	113-215-102	. . CIRCUIT BREAKER,2 BLADE PROPELLER WITH. . . ELECTRIC DEICER	1	1
	113-220-102	. . CIRCUIT BREAKER,3 BLADE PROPELLER WITH. . . ELECTRIC DEICER/SUPERSEDES CB3120C/	1	1
- 24	35-380053-11	. . SWITCH,WINDSHIELD ANTI-ICE.	1	1

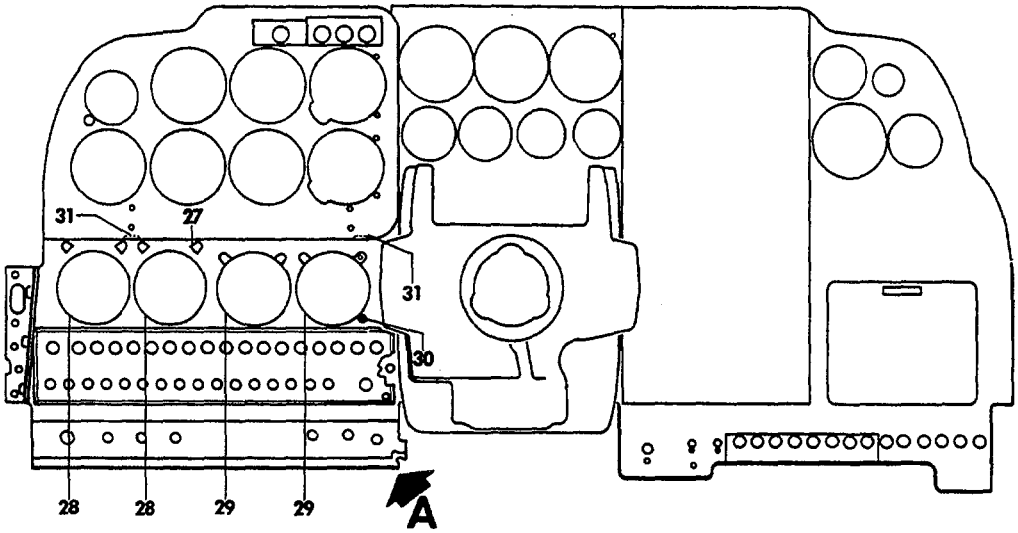

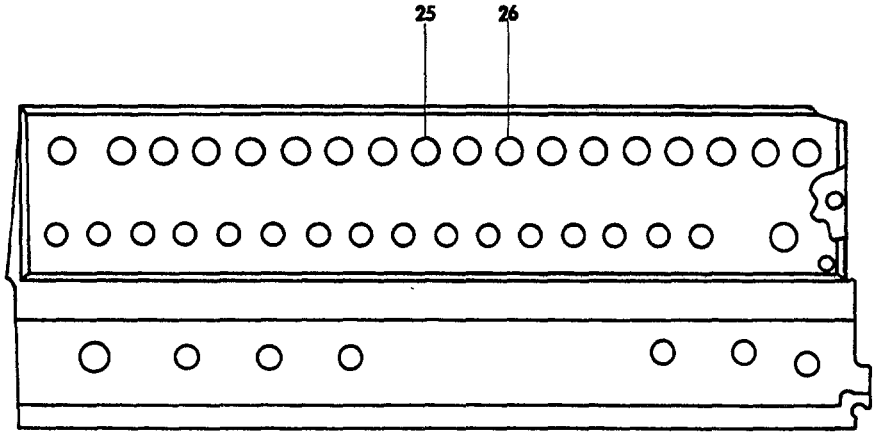

VIEW A

55-395-25

FIGURE 14-50. INSTRUMENT SUBPANEL
/SHEET 2 OF 2 SHEETS/

SUB-SECT UNIT & ITEM NO.	PART NO.	DESCRIPTION 1 2 3 4 5 6 7	UNITS PER ASSY	USABLE ON CODE
14-50 - 25	CB3110C	. . CIRCUIT BREAKER,ROTATING BEACON . . . . . /SUPERSEDES CB3110A/	1	1
- 26	113-205-102	. . CIRCUIT BREAKER,ICE LIGHTS.	1	1
	NAS451-8	. . BUTTON,PLUG/USE WHERE EQUIPMENT IS NOT. . . INSTALLED/	AR	1
	734-1	. . NUT,CIRCUIT BREAKER RETAINING	AR	1
- 27	A8970B2-327	. . POST LIGHT/BLUE/.	8	1
	A8970-2-327	. . POST LIGHT/RED/	8	1
	114931-1-16	. . STRIP,TERMINAL/16 HOLES/.	1	1
	114931-1-6	. . STRIP,TERMINAL/6 HOLES/	1	1
	114931-1-2	. . STRIP,TERMINAL/2 HOLES/	3	1
- 28	R 96-380016-1	. . GAGE,ENGINE/OIL PRESSURE;OIL AND CYLINDER . HEAD TEMPERATURE/	2	1
- 29	50-324103-1	. . BEZEL,INSTRUMENT CUTOUT . . . . . /ATTACHING PARTS/	2	1
- 30	AN507B632R	. . SCREW	4	
	NAS487-17	. . NUT	4	
		---*---		
- 31	150PL8	. . MOUNT,SHOCK . . . . . /ATTACHING PARTS/	2	1
	AN520-8R	. . SCREW	4	
	MS20365-832	. . NUT	4	
		---*---		
	R 95-940011-5	CONTROL,PARKING BRAKE	1	4

CODES OF EFFECTIVITY

1 TE-452 THRU TE-767
2 TE-452 THRU TE-515 EXCEPT TE-510
3 TE-510 AND TE-516 THRU TE-767
4 TE-452 THRU TE-694

39-14-60

INSTRUMENT SUBPANEL
TE-768 THRU TE-942 EXCEPT TE-938

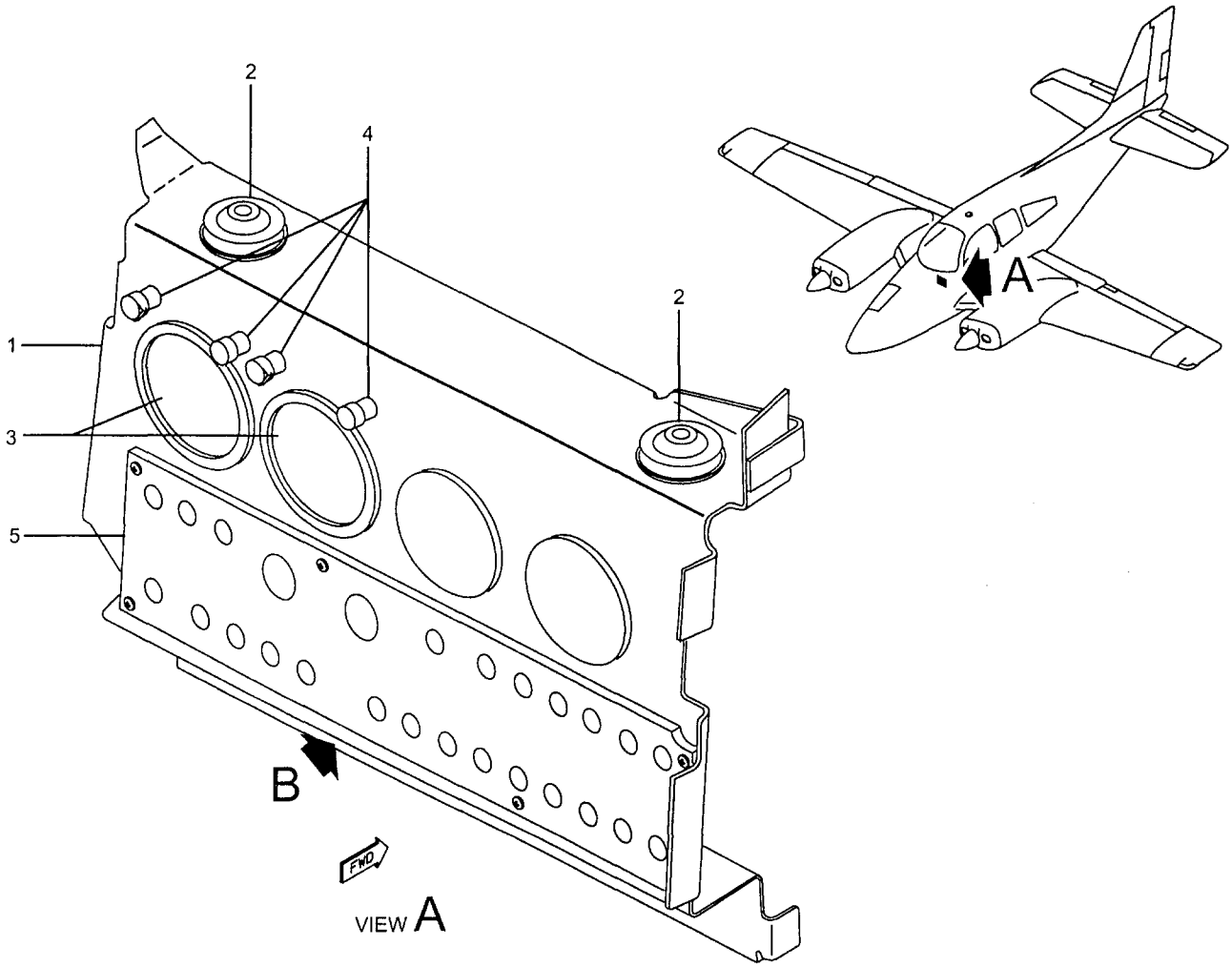

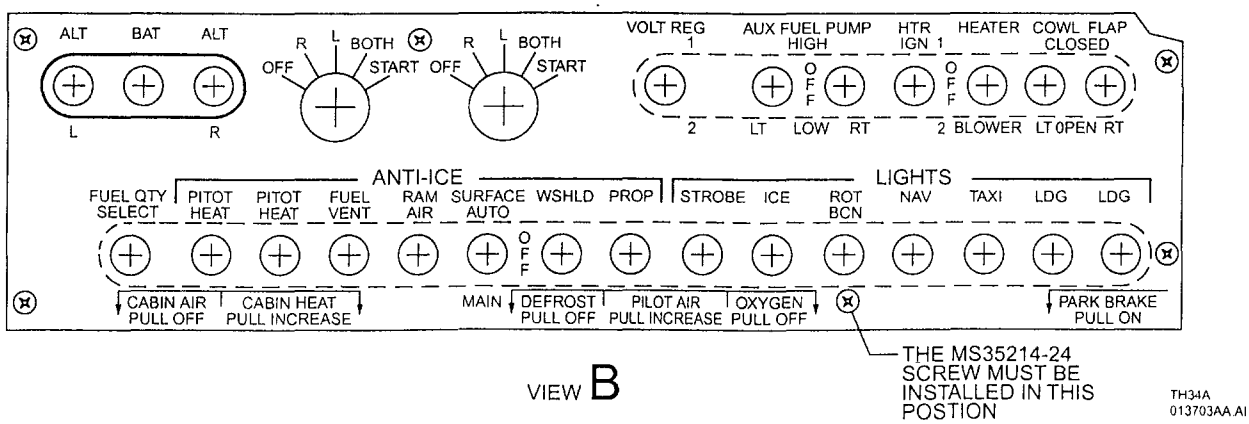

FIGURE 14-60 . INSTRUMENT SUBPANEL
/SHEET 1 OF 2 SHEETS/

SUB-SECT UNIT & ITEM NO.	PART NO.	DESCRIPTION 1 2 3 4 5 6 7	UNITS PER ASSY	USABLE ON CODE
14-60	58-324000-1	PANEL INSTL,INSTRUMENT/SINGLE/	NP	1
	58-324001-1	PANEL INSTL,INSTRUMENT/DUAL/	NP	1
	58-324039-1	INSTRUMENT INSTL/INTERNALLY LIGHTED/	NP	1
	58-324038-3	. SUBPANEL ASSY,LH	1	1
		(ATTACHING PARTS)		
	AN3-4A	. BOLT	6	
	AN960-10	. WASHER	6	
		- - - - ★ - - - -		
1	96-324158-23	. . SUBPANEL ASSY	1	1
	96-324158-19	. . . PANEL	1	1
	NAS696A06	. . . NUTPLATE	5	1
2	150PL8	. . MOUNT,SHOCK	2	1
		(ATTACHING PARTS)		
	AN520-8R	. . SCREW	4	
	MS20365-832	. . NUT	4	
		- - - - ★ - - - -		
3	96-380016-1	. . GAGE,ENGINE/OIL PRESSURE,OIL & CYLINDER HEAD TEMPERATURE/	2	1
	96-384058-3	. . GAGE,ENGINE/OIL PRESSURE,OIL & CYLINDER HEAD TEMPERATURE/INTERNALLY LIGHTED/	2	1
		(ATTACHING PARTS)		
	AN507B632R	. . SCREW	4	
	NAS487-17	. . NUT	4	
		- - - - ★ - - - -		
	58-380022-11	. . TRAY ASSY,LIGHT/INTERNALLY LIGHTED INSTRUMENT/	2	1
4	AN8970B2-327	. . LIGHT ASSY,INSTRUMENT POST	4	1
	327	. . . BULB	4	1
5	96-384043-1	. . PANEL,LH ELECTROLUMINESCENT SWITCH	1	1
		(ATTACHING PARTS)		
	AN515B632R	. . SCREW	7	
	MS35214-24	. . SCREW	1	
		- - - - ★ - - - -		
		**** WARNING **** IT IS IMPERATIVE THAT THE MS35214-24 SCREW IS INSTALLED AS SHOWN ON THE ILLUSTRATION. IMPROPER INSTALLATION OF THE ELECTROLUMINESCENT PANEL FASTENERS MAY RESULT IN AN ELECTRIICAL SHORT.		

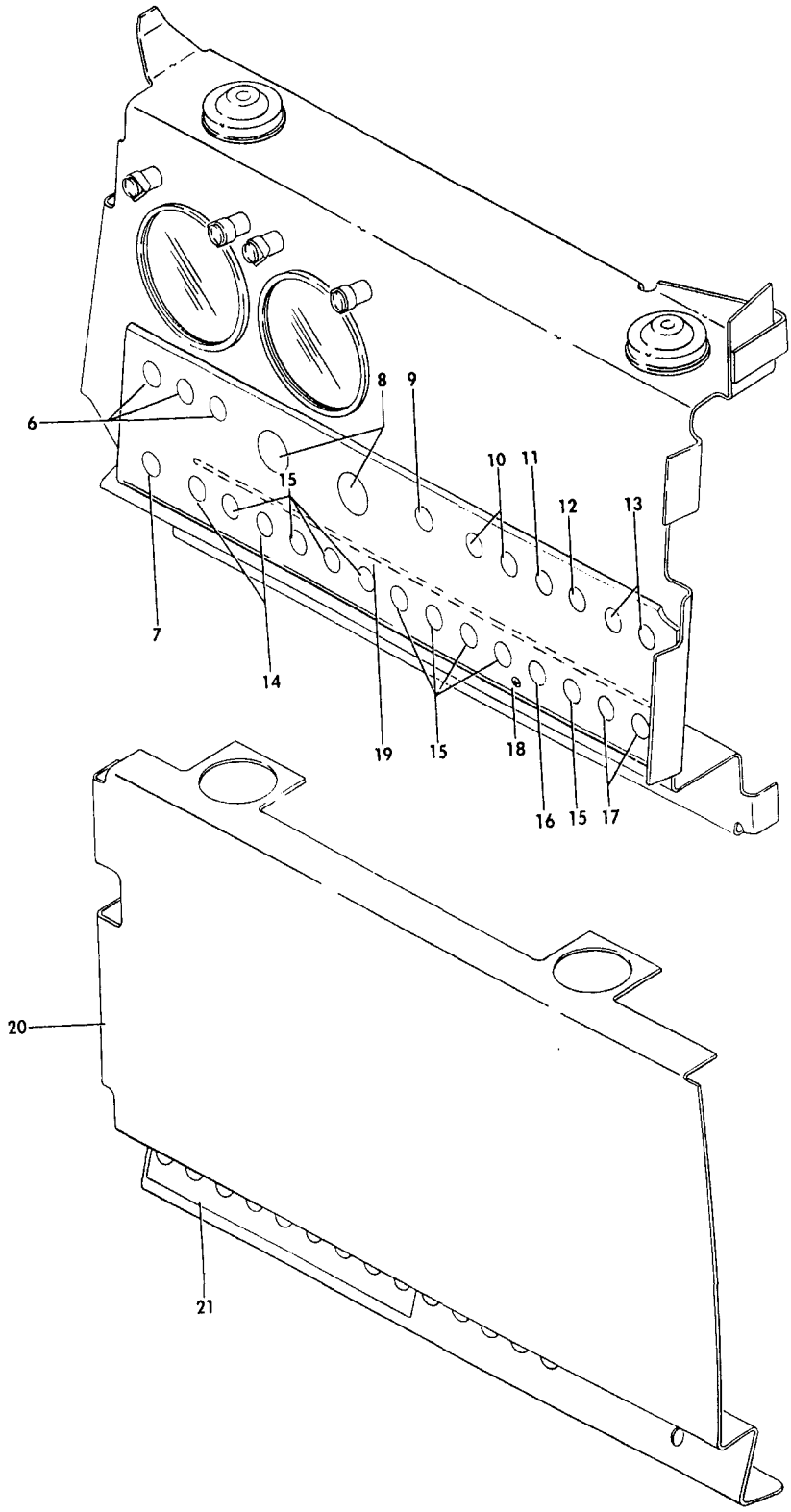

E55-395-2

FIGURE 14-60. INSTRUMENT SUBPANEL
/SHEET 2 OF 2 SHEETS/

ATA CODE & INDEX NO.	PART NO.	DESCRIPTION 1 2 3 4 5 6 7	UNITS PER ASSY	USABLE ON CODE
14-60 - 6	35-380053-21	. . SWITCH/ALTERNATOR & BATTERY/.	3	1
	96-384050-5	. . KNOB,SWITCH	3	1
- 7	35-380053-9	. . SWITCH.	1	1
	96-384050-9	. . KNOB,SWITCH	1	1
- 8	10-357230-1A	. . SWITCH/MAGNETO & IGNITION/.	2	1
- 9	35-380053-1	. . SWITCH/VOLTAGE REGULATOR/	1	1
	96-384050-5	. . KNOB,SWITCH	1	1
- 10	35-380053-3	. . SWITCH/AUXILIARY FUEL PUMP/	2	1
	96-384050-9	. . KNOB,SWITCH	2	1
- 11	35-380053-23	. . SWITCH/HEATER IGNITOR/.	1	1
	96-384050-7	. . KNOB,SWITCH	1	1
- 12	35-380053-3	. . SWITCH/HEATER BLOWER/	1	1
	96-384050-7	. . KNOB,SWITCH	1	1
- 13	35-380053-27	. . SWITCH/COWL FLAP/	2	1
	96-384050-9	. . KNOB,SWITCH	2	1
- 14	35-380132-1	. . CIRCUIT BREAKER,TRIP FREE TOGGLE/PITOT. . . HEAT & FUEL VENT/	2	1
- 15	NAS451-43	. . BUTTON,PLUG	9	1
- 16	35-380132-41	. . CIRCUIT BREAKER,TRIP FREE TOGGLE/NAV LIGHT/	1	1
- 17	35-380132-43	. . CIRCUIT BREAKER,TRIP FREE TOGGLE/LANDING. . GEAR/	2	1
- 18	35-324086	. . INSERT.	1	1
- 19	114931-3-14	. . BUS BAR	1	1
- 20	96-324189	. SUBPANEL ASSY,RH/DUAL PANEL ONLY/ . . . . . /ATTACHING PARTS/	1	1
	NAS387-1032	. SCREW	3	
		----*----		
	150PL8	. . MOUNT,SHOCK . . . . . /ATTACHING PARTS/	2	1
	AN520-8R	. . SCREW	4	
	MS20365-832	. . NUT	4	
		----*----		
	96-554024	. . PLACARD,COPILOT AIR PULL OPEN	1	1
- 21	58-364026	. PLACARD,RADIO CIRCUIT BREAKERS IDENTIFICATION	1	1

CODES OF EFFECTIVITY

1 TE-768 THRU TE-942
EXCEPT TE-938

"END"

39-14-70
IGNITION PANEL AND OUTSIDE AIR TEMPERATURE INDICATOR
TC-1 THRU TC-190

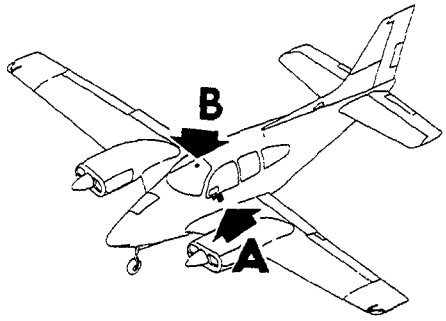

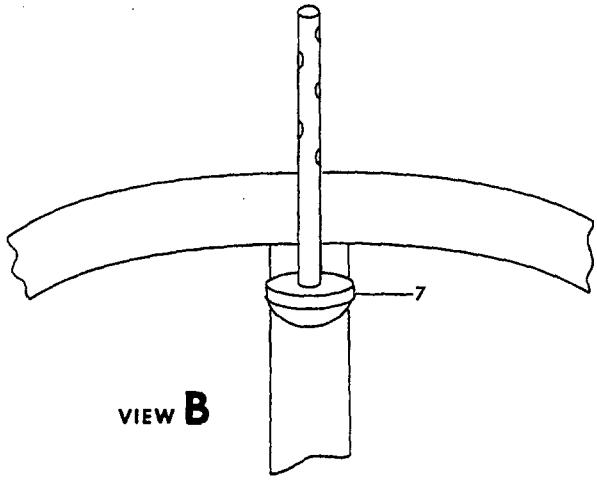

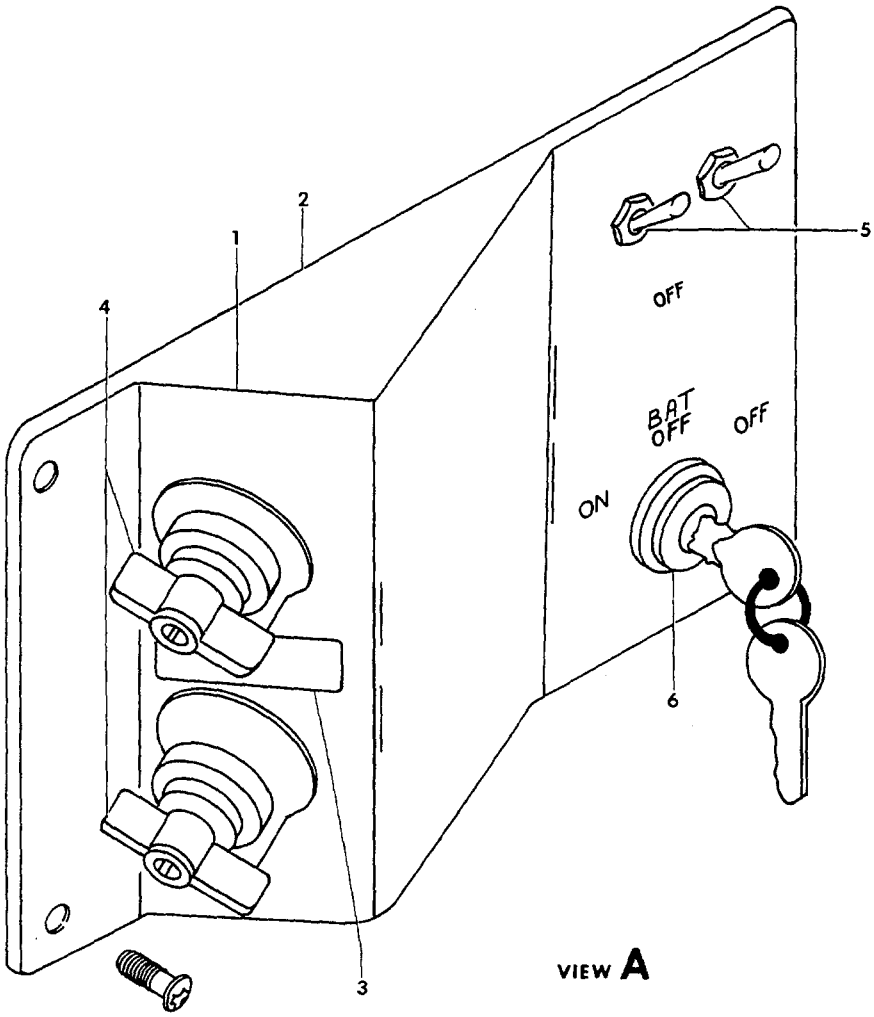

55-395-26

FIGURE 14-70. IGNITION PANEL AND OUTSIDE AIR TEMPERATURE INDICATOR

ATA CODE & INDEX NO.	PART NO.	DESCRIPTION 1 2 3 4 5 6 7	UNITS PER ASSY	USABLE ON CODE
14-70	95-364025-601	ESCUTCHEON ASSY,IGNITION PANEL.	1	1
	95-364029-621	ESCUTCHEON ASSY,IGNITION PANEL/BLUE/.	1	2
	95-364029-622	ESCUTCHEON ASSY,IGNITION PANEL/GRAY/.	1	2
	95-364029-623	ESCUTCHEON ASSY,IGNITION PANEL/BEIGE/	1	2
	95-364029-624	ESCUTCHEON ASSY,IGNITION PANEL/GREEN/	1	2
		/ATTACHING PARTS/		
	NAS384-6	SCREW	5	
		*		
- 1	95-364029-3	. BRACKET/OPTIONAL/	1	2
	95-364025-1	. ESCUTCHEON.	1	1
	95-360000-13	. PLATE,IGNITION PANEL ESCUTCHEON	1	1
- 2	95-364029-601	. ESCUTCHEON/BLUE/.	1	2
	95-364029-602	. ESCUTCHEON/GRAY/.	1	2
	95-364029-603	. ESCUTCHEON/BEIGE/	1	2
	95-364029-604	. ESCUTCHEON/GREEN/	1	2
	95-324062	. PLACARD,IGNITION PANEL.	1	1
- 3	10-126676	. PLACARD,IGNITION PANEL.	1	2
	9095	. SWITCH,STARTER.	2	1
- 4	10-126630-1	. SWITCH,STARTER.	2	2
	8906K754	. SWITCH.	6	1
- 5	8906K754	. SWITCH.	2	2
- 6	COB71989-1	. SWITCH,BATTERY IGNITION/SUPERSEDES US-10/ . .	1	3
	6050	. NUT,RING.	6	1
	MS25226-4-4	. BAR,BUS	1	1
- 7	35-380019-1	GAGE,FREE AIR TEMPERATURE	1	3

CODES OF EFFECTIVITY

1 TC-2 THRU TC-23

2 TC-1 AND TC-24 THRU TC-190

3 TC-1 THRU TC-190

"END"

39-14-80
IGNITION PANEL AND OUTSIDE AIR TEMPERATURE INDICATOR
TC-191 THRU TC-1607, TE-1 THRU TE-942 EXCEPT TE-938

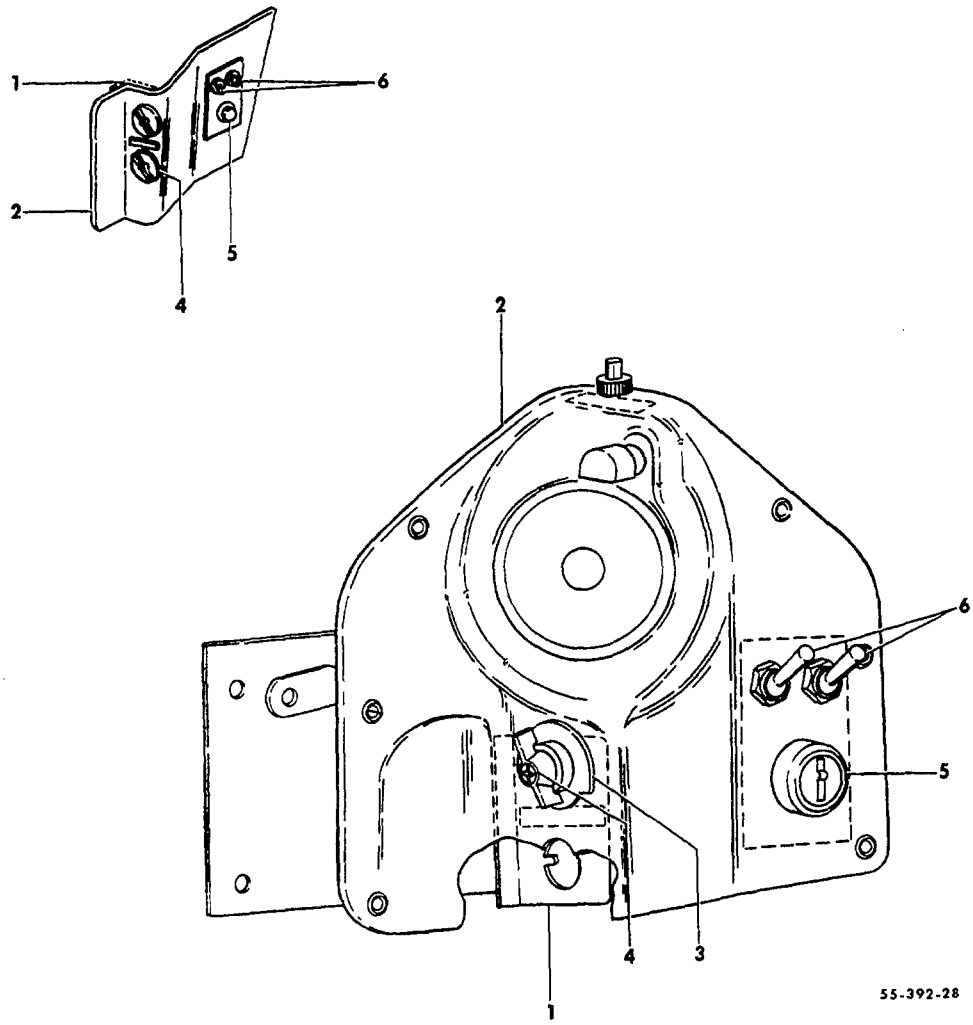

FIGURE 14-80.IGNITION PANEL AND OUTSIDE AIR TEMPERATURE INDICATOR/SHEET 1 OF 2 SHEETS/

ATA CODE & INDEX NO.	PART NO.	DESCRIPTION 1 2 3 4 5 6 7	UNITS PER ASSY	USABLE ON CODE
14-80	96-364033-605	ESCUTCHEON ASSY,IGNITION PANEL/BLUE/.	1	1
	96-364033-606	ESCUTCHEON ASSY,IGNITION PANEL/GRAY/.	1	1
	96-364033-607	ESCUTCHEON ASSY,IGNITION PANEL/BEIGE/	1	1
	96-364033-608	ESCUTCHEON ASSY,IGNITION PANEL/GREEN/	1	1
	96-364033-618	ESCUTCHEON ASSY,IGNITION PANEL/GENERATOR/ . . .	1	2
	96-364060-605	ESCUTCHEON ASSY,IGNITION PANEL/GENERATOR/ . . .	1	3
	96-364033-622	ESCUTCHEON ASSY,IGNITION PANEL/ALTERNATOR/. . .	1	2
	96-364060-603	ESCUTCHEON ASSY,IGNITION PANEL/ALTERNATOR/. . .	1	3
- 1	95-364029-3	. BRACKET	1	4
	96-364033-601	. ESCUTCHEON/BLUE/.	1	1
	96-364033-602	. ESCUTCHEON/GRAY/.	1	1
	96-364033-603	. ESCUTCHEON/BEIGE/	1	1
	96-364033-604	. ESCUTCHEON/GREEN/	1	1
	96-364033-617	. ESCUTCHEON/BEIGE,WITH GENERATOR/.	1	2
	96-364033-9	. ESCUTCHEON/BEIGE,WITH ALTERNATOR/	1	2
- 2	96-364060-601	. ESCUTCHEON.	1	7
	96-364060-13	. ESCUTCHEON.	1	8
- 3	10-126676	. PLACARD,IGNITION SWITCH	2	4
- 4	10-126630-1	. SWITCH,STARTER & IGNITION	2	6
	10-357230-1	. SWITCH,STARTER & IGNITION	2	3
- 5	COB71989-1	. SWITCH,BATTERY/SUPERSEDES US-10,. . . . . WITH GENERATOR/	1	6
	96-380025	. SWITCH,BATTERY/WITH ALTERNATOR OR AIRCRAFT. . SERIALED TC-816 THRU TC-1042 & TE-1 THRU TE-451	1	5
	9345X2	. . TUMBLER,SWITCH WITH KEYS/FOR 96-380025/ . .	1	5
	35-380053-654	. SWITCH ASSY,ALTERNATOR OR GENERATOR	2	4
- 6	35-380053-7	. . SWITCH.	1	4
	35-380052	. . KNOB,SWITCH	1	4

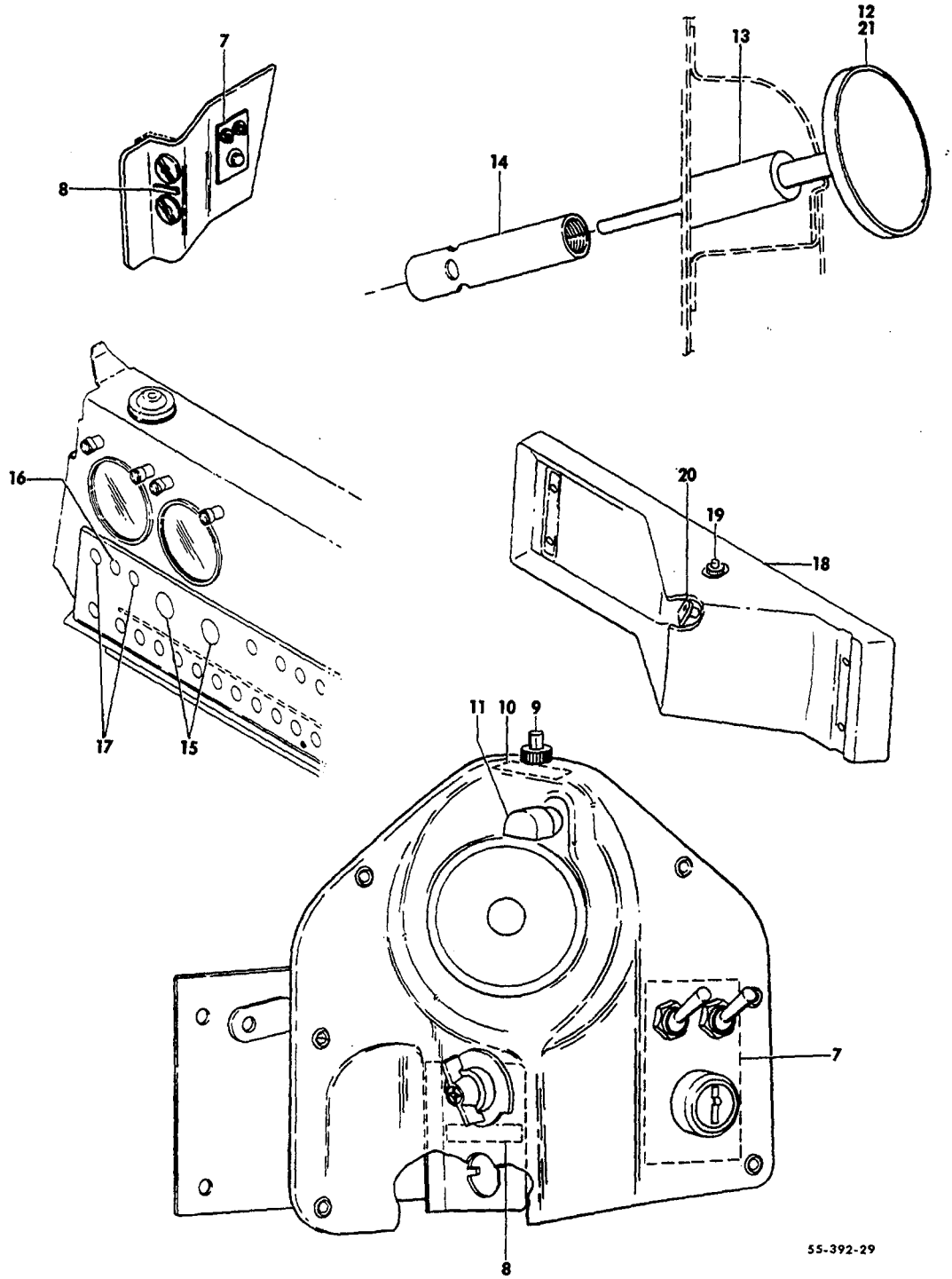

FIGURE 14-80.IGNITION PANEL AND OUTSIDE AIR TEMPERATURE INDICATOR/SHEET 2 OF 2 SHEETS/

SUB-SECT UNIT & ITEM NO.	PART NO.	DESCRIPTION 1 2 3 4 5 6 7	UNITS PER ASSY	USABLE ON CODE
14-80 - 7	96-364035	. PLACARD,BATTERY & GENERATOR SWITCH.	1	6
	96-364038-1	. PLACARD,BATTERY & GENERATOR SWITCH.	1	3
	96-364038-3	. PLACARD,BATTERY & ALTERNATOR SWITCH	1	5
- 8	95-364030	. PLACARD,IGNITION SWITCH	1	4
- 9	30-15	SWITCH,OAT & COMPASS LIGHT/MOUNTED ON . . . . . CONTROL WHEEL TC-1403 AND AFTER/	1	10
	30C1023	NUT,SWITCH MOUNTING	1	12
- 10	96-364061	PLACARD,OAT & COMPASS LIGHT SWITCH.	1	7
- 11	A8970-1-327	POST LIGHT/RED,OAT GAGE/.	1	10
	A8970B1-327	POST LIGHT/BLUE,OAT GAGE/	1	3
	327	. BULB.	1	4
	35-380019-1	INDICATOR,OUTSIDE AIR TEMPERATURE	1	13
	35-380019-3	INDICATOR,OUTSIDE AIR TEMPERATURE	1	14
	96-324131-9	INDICATOR INSTL,OUTSIDE AIR TEMPERATURE	NP	3
- 12	35-380019-5	. INDICATOR,OUTSIDE AIR TEMPERATURE	1	3
- 13	96-324131-1	. SUPPORT,INDICATOR	1	3
- 14	96-324131-7	. SHIELD,SUN.	1	3
- 15	R 10-357230-1A	SWITCH,STARTER AND IGNITION	2	9
- 16	35-380053-21	SWITCH,BATTERY.	1	9
	96-384050-5	KNOB,SWITCH	1	9
- 17	35-380053-21	SWITCH,ALTERNATOR	2	9
	96-384050-5	KNOB,SWITCH	2	9
- 18	96-534093-1	ESCUTCHEON,OUTSIDE AIR TEMPERATURE INDICATOR. .	1	9
	96-364061	PLACARD,OAT LIGHT SWITCH.	1	9
- 19	30-15	SWITCH,OAT LIGHT.	1	9
- 20	A8970-1-327	POST LIGHT/RED,OAT GAGE/.	1	10
	A8970B1-327	POST LIGHT/BLUE,OAT GAGE/	1	11
- 21	35-380019-5	INDICATOR,OUTSIDE AIR TEMPERATURE	1	9
	58-530034-1	COVER,OAT INDICATOR	1	9

CODES OF EFFECTIVITY

1	TC-191 THRU TC-815	2	TC-816 THRU TC-1042 TE-1 THRU TE-451
3	TC-1043 THRU TC-1607 TE-452 THRU TE-767	4	TC-191 THRU TC-1607 TE-1 THRU TE-767
5	TC-816 THRU TC-1607 TE-1 THRU TE-767	6	TC-191 THRU TC-1042 TE-1 THRU TE-451
7	TC-1043 THRU TC-1402 TE-452 THRU TE-767	8	TC-1403 THRU TC-1607
9	TE-768 THRU TE-942 EXCEPT TE-938	10	TC-1043 THRU TC-1607 TE-452 THRU TE-837
11	TE-838 THRU TE-942 EXCEPT TE-938	12	TC-1043 THRU TC-1607 TE-452 THRU TE-942 EXCEPT TE-938
13	TC-191 THRU TC-569	14	TC-570 THRU TC-1042 TE-1 THRU TE-451

39-17-01
INSTRUMENT PANEL PLUMBING
TC-1 THRU TC-190

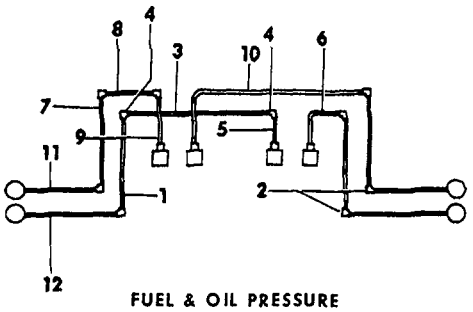

FUEL & OIL PRESSURE

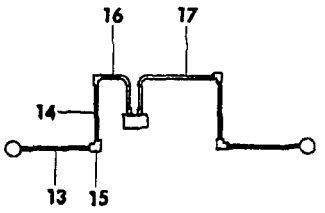

MANIFOLD PRESSURE

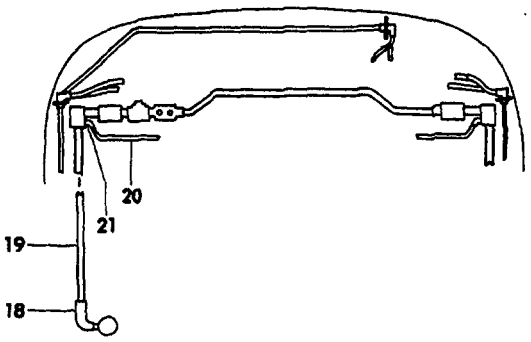

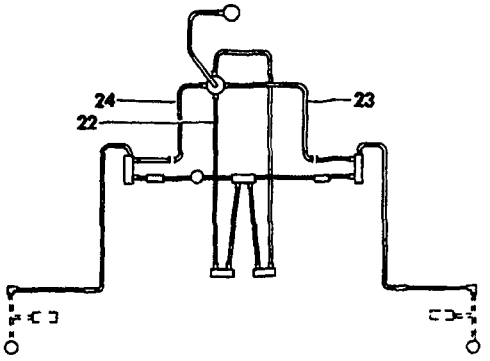

55-396-16

FIGURE 17-01.INSTRUMENT PLUMBING
/SHEET 1 OF 2 SHEETS/

ATA CODE & INDEX NO.	PART NO.	DESCRIPTION 1 2 3 4 5 6 7	UNITS PER ASSY	USABLE ON CODE
17-01	95-324018	PLUMBING INSTL,INSTRUMENT	NP	1
- 1	95-324018-67	. TUBE ASSY,FUEL PRESSURE LH.	1	1
	95-324018-71	. TUBE ASSY,FUEL PRESSURE RH.	1	1
- 2	AN837-4D	. ELBOW,FUEL-OIL PRESSURE TUBE.	4	1
	AN960-716	. WASHER,FUEL PRESSURE TUBE	2	1
	AN924-4D	. NUT,FUEL PRESSURE TUBE.	2	1
- 3	95-324018-39	. TUBE ASSY,FUEL PRESSURE	1	1
- 4	AN833-4D	. ELBOW,FUEL PRESSURE TUBE.	2	1
	AN960-716	. WASHER,FUEL PRESSURE TUBE	2	1
	AN924-4D	. NUT,FUEL PRESSURE TUBE.	2	1
- 5	AN6270-4-20	. HOSE ASSY,FUEL PRESSURE	1	1
- 6	AN6270-4-17	. HOSE ASSY,FUEL PRESSURE	1	1
- 7	95-324018-35	. TUBE ASSY,OIL PRESSURE LH	1	1
	95-324018-107	. TUBE ASSY,OIL PRESSURE RH	1	1
- 8	95-324018-79	. TUBE ASSY,OIL PRESSURE.	1	1
- 9	AN6270-4-17	. HOSE ASSY,OIL PRESSURE.	1	1
- 10	AN6270-4-15	. HOSE ASSY,OIL PRESSURE.	1	1
- 11	95-324018-5	. TUBE ASSY,OIL PRESSURE LH	1	1
	95-324018-6	. TUBE ASSY,OIL PRESSURE RH	1	1
- 12	95-324018-7	. TUBE ASSY,FUEL PRESSURE LH.	1	1
	95-324018-8	. TUBE ASSY,FUEL PRESSURE RH.	1	1
- 13	95-324018-3	. TUBE ASSY,MANIFOLD PRESSURE LH.	1	1
	95-324018-4	. TUBE ASSY,MANIFOLD PRESSURE RH.	1	1
- 14	95-324018-115	. TUBE ASSY,MANIFOLD PRESSURE LH.	1	1
	95-324018-119	. TUBE ASSY,MANIFOLD PRESSURE RH.	1	1
- 15	AN837-4D	. ELBOW,MANIFOLD PRESSURE TUBE.	2	1
	AN960-716	. WASHER,MANIFOLD PRESSURE TUBE	2	1
	AN924-4D	. NUT,MANIFOLD PRESSURE TUBE.	2	1
- 16	AN6270-4-25	. HOSE ASSY,LOW PRESSURE LH	1	1
- 17	AN6270-4-27	. HOSE ASSY,LOW PRESSURE RH	1	1
	AN822-10D	. ELBOW	2	1
- 18	106200H10-15	. HOSE,CONNECTING/ORDER 5/8 ID MIL 6000 X 3 3/4 INCHES/	NP	1
	AN737TW34	. CLAMP	2	1
- 19	95-324018-47	. TUBE ASSY,VACUUM LH	1	1
	95-324018-55	. TUBE ASSY,VACUUM RH	1	1
- 20	95-324018-87	. TUBE ASSY,VACUUM LH	1	1
	95-324018-83	. TUBE ASSY,VACUUM RH	1	1
- 21	AN823-4D	. ELBOW	2	1
- 22	95-324018-195	. TUBE ASSY	1	1
- 23	95-324018-147	. TUBE ASSY,VACUUM.	1	1
- 24	95-324018-149	. TUBE ASSY,VACUUM.	1	1

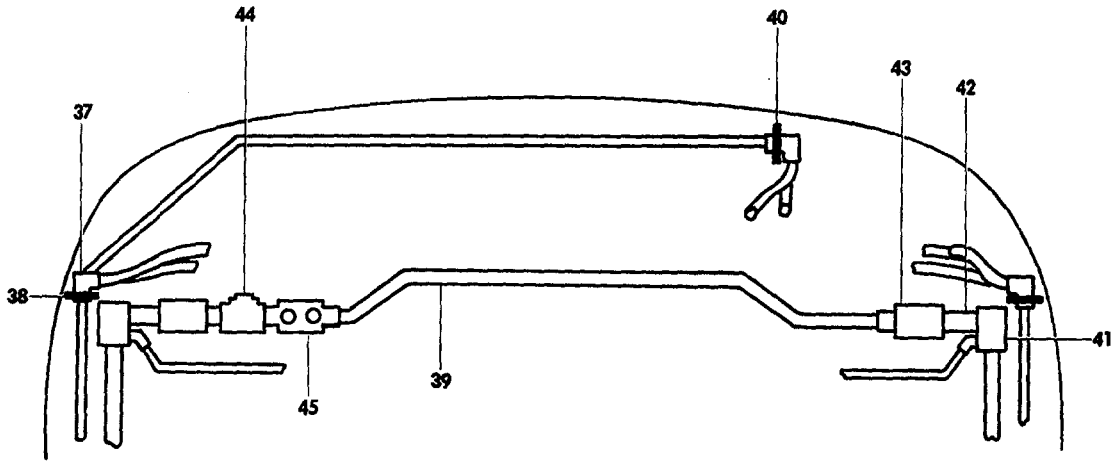

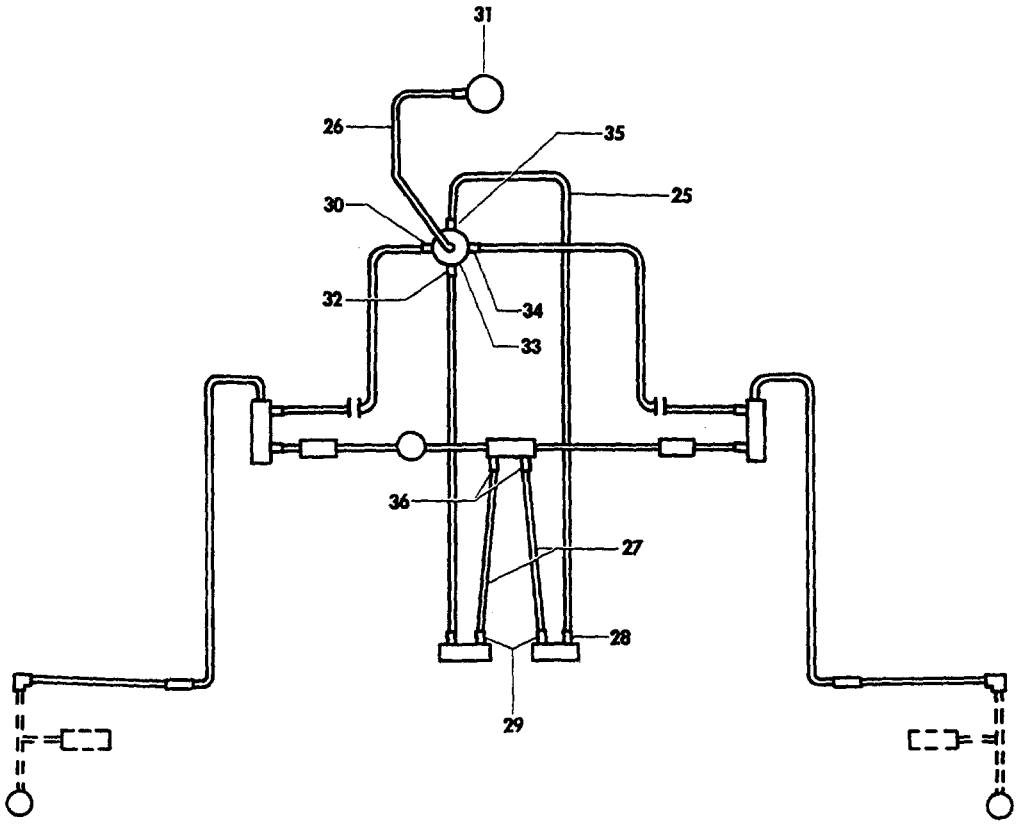

55-396-17

FIGURE 17-01.INSTRUMENT PLUMBING
/SHEET 2 OF 2 SHEETS/

ATA CODE & INDEX NO.	PART NO.	DESCRIPTION 1 2 3 4 5 6 7	UNITS PER ASSY	USABLE ON CODE
17-01 - 25	95-324018-191	TUBE ASSY,DIRECTIONAL GYRO	1	1
- 26	95-324018-91	TUBE ASSY,SUCTION GAGE	1	1
- 27	AN6270-6-14	HOSE ASSY,LOW PRESSURE	2	1
- 28	AN822-2D	ELBOW	2	1
	AN912-1D	BUSHING,REDUCER	2	1
- 29	AN823-6D	ELBOW	2	1
- 30	AN842-4D	ELBOW	1	1
- 31	AN816-2D	CONNECTOR	1	1
- 32	AN822-2D	ELBOW	1	1
- 33	AN822-2D	ELBOW	1	1
- 34	AN842-4D	ELBOW	1	1
- 35	AN816-2D	CONNECTOR	1	1
- 36	AN816-6D	CONNECTOR	2	1
- 37	AN837-4D	ELBOW	4	1
	AN960-716	WASHER	4	1
	AN924-4D	NUT	4	1
- 38	95-324018-141	BRACKET,TUBE SUPPORT	2	1
- 39	95-324018-75	TUBE ASSY,MANIFOLD PRESSURE	1	1
- 40	95-324018-139	BRACKET,TUBE SUPPORT	1	1
- 41	95-324043-3	MANIFOLD,VACUUM PLUMBING	2	1
- 42	AN911-3D	NIPPLE	3	1
- 43	2-2844-75	VALVE,CHECK	2	1
- 44	9520	VALVE,RELIEF	1	1
	AN913-1D	PLUG,RELIEF VALVE	1	1
- 45	95-324043-1	MANIFOLD,VACUUM PLUMBING	1	1

CODES OF EFFECTIVITY

1 TC-1 THRU TC-190

"END"

39-17-10
INSTRUMENT PANEL PLUMBING
TC-191 THRU TC-1607,TE-1 THRU TE-451

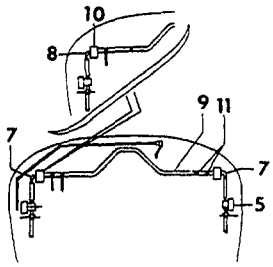

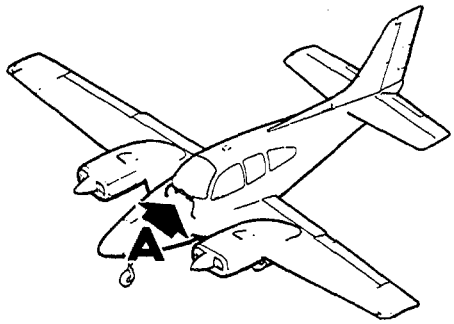

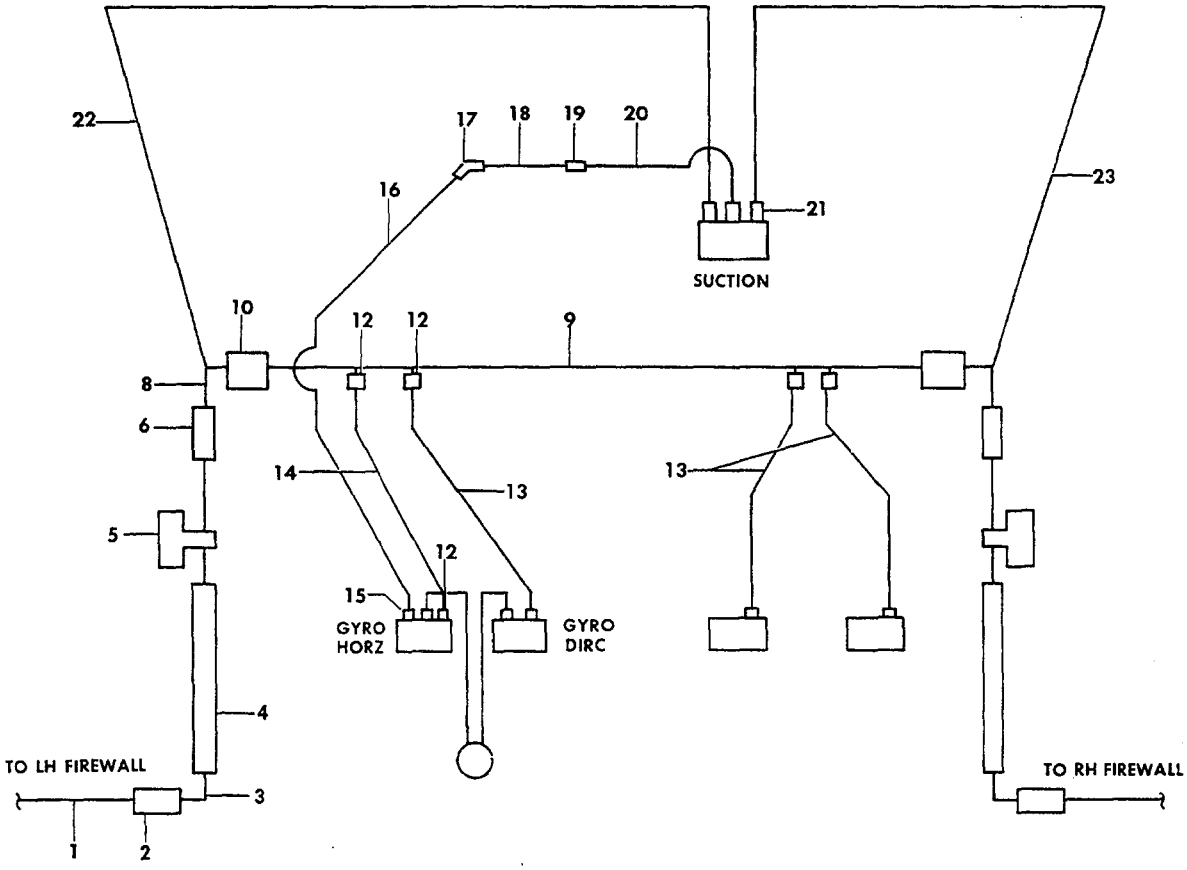

VIEW **A**

FIGURE 17-10. INSTRUMENT PLUMBING
/SHEET 1 OF 3 SHEETS/

ATA CODE & INDEX NO.	PART NO.	DESCRIPTION 1 2 3 4 5 6 7	UNITS PER ASSY	USABLE ON CODE
17-10	96-324038	PLUMBING INSTALLATION,INSTRUMENT.	NP	1
- 1	96-324018-1	. TUBE ASSY,VACUUM/LH & RH/	2	1
- 2	106200H10-26	. HOSE,VACUUM TUBE.	2	1
		/ATTACHING PARTS/		
	AN737TW34	. CLAMP	2	
		----*----		
- 3	AN848-10D	. ELBOW,VACUUM TUBE	2	1
- 4	106200H10-70	. HOSE,VACUUM TUBE.	2	1
		/ATTACHING PARTS/		
	AN737TW34	. CLAMP	4	
		----*----		
	133A3	. VALVE,VACUUM REGULATOR.	2	2
	3005A1	. . FILTER,REGULATOR VALVE/FOAM RUBBER/	1	2
- 5	2H3-6	. VALVE,VACUUM REGULATOR/SUPERSEDES 133B3/. . .	2	3
- 6	106200H8-17	. HOSE,VACUUM TUBE.	2	2
	106200H10-17	. HOSE,VACUUM TUBE.	2	3
		/ATTACHING PARTS/		
	AN737TW24	. CLAMP	2	2
	A6	. CLAMP	2	3
		----*----		
- 7	134A1	. FITTING,VACUUM MANIFOLD	2	2
	95-324073	. MANIFOLD ASSY,VACUUM.	1	2
	95-324073-9	. MANIFOLD ASSY,VACUUM.	1	4
	95-324073-37	. MANIFOLD ASSY,VACUUM.	1	5
	95-324073-11	. . WELD ASSY,MANIFOLD FITTING LH	1	3
	95-324073-12	. . WELD ASSY,MANIFOLD FITTING RH	1	3
- 8	95-324073-25	. . WELD ASSY,MANIFOLD FITTING.	2	5
- 9	95-324073-27	. . TUBE ASSY,MANIFOLD.	1	5
- 10	3210-00	. . VALVE,VACUUM MANIFOLD CHECK	2	5
- 11	AN913-2D	. PLUG,VACUUM MANIFOLD.	2	1
- 12	AN823-6D	. ELBOW,VACUUM PLUMBING	3	1
- 13	AN6270-6-17	. HOSE ASSY,VACUUM.	3	1
- 14	AN6270-6-18	. HOSE ASSY,VACUUM.	1	1
- 15	MS20822-4-4D	. ELBOW,HORIZON GYRO.	1	1
	AN816-4D	. NIPPLE,HORIZON GYRO	1	1
- 16	AN6270-4-15	. HOSE ASSY,HORIZON GYRO TO SUCTION GAGE. . . .	1	1
- 17	AN837-4D	. ELBOW,VACUUM PLUMBING	1	1
	AN960-416	. WASHER,VACUUM PLUMBING.	1	1
	AN924-4D	. NUT,VACUUM PLUMBING	1	1
	96-324038-33	. TUBE ASSY,HORIZON GYRO TO SUCTION GAGE. . . .	1	6
- 18	96-324038-113	. TUBE ASSY,HORIZON GYRO TO SUCTION GAGE. . . .	1	7
- 19	AN832-4D	. UNION,VACUUM PLUMBING	1	1
	AN960-416	. WASHER,VACUUM PLUMBING.	1	1
	AN924-4D	. NUT,VACUUM PLUMBING	1	1
	96-324038-31	. TUBE ASSY,HORIZON GYRO TO SUCTION GAGE. . . .	1	8
- 20	96-324038-55	. HOSE ASSY,HORIZON GYRO TO SUCTION GAGE. . . .	1	5
- 21	AN816-4D	. NIPPLE,SUCTION GAGE	1	1
- 22	96-324038-51	. TUBE,VACUUM LH.	1	5
- 23	96-324038-49	. TUBE,VACUUM RH.	1	5
		/ATTACHING PARTS/		
	A6	. CLAMP	2	
		----*----		

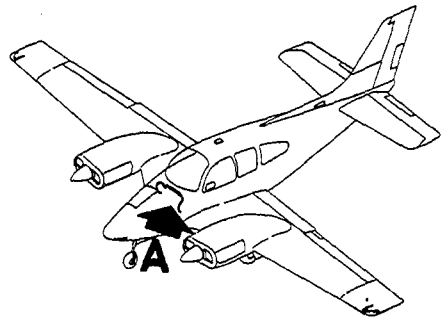

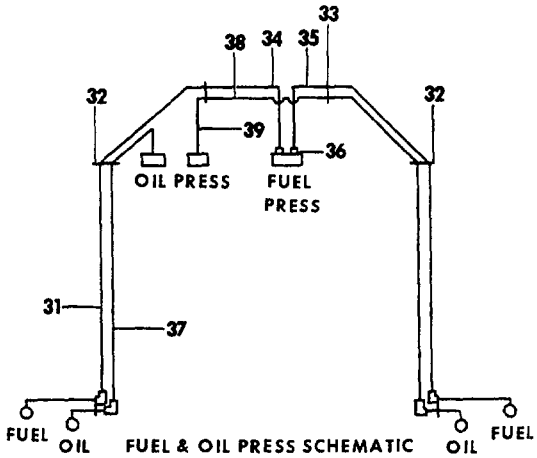

FUEL & OIL PRESS SCHEMATIC

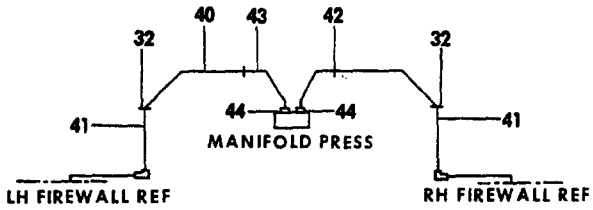

MANIFOLD PRESS SCHEMATIC

VIEW **A**

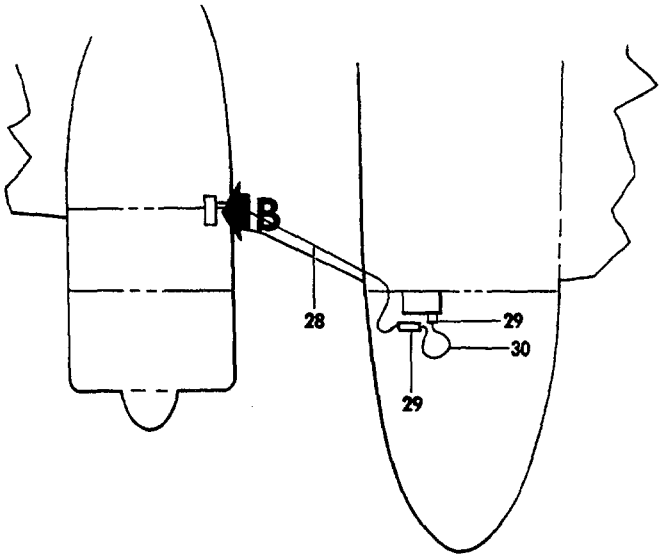

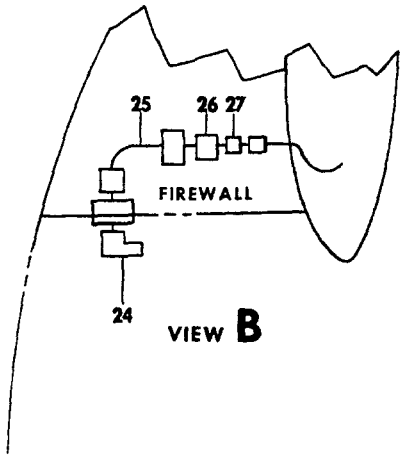

VIEW **B**

55-393-21

FIGURE 17-10. INSTRUMENT PLUMBING
/SHEET 2 OF 3 SHEETS/

ATA CODE & INDEX NO.	PART NO.	DESCRIPTION 1 2 3 4 5 6 7	UNITS PER ASSY	USABLE ON CODE
17-10 - 24	AN833-4	ELBOW,FUEL FLOW INDICATOR VENT TUBE	1	9
	AN960-416L	WASHER,FUEL FLOW INDICATOR VENT TUBE	2	9
	AN924-4	NUT,FUEL FLOW INDICATOR VENT TUBE	1	9
- 25	95-324072-51	TUBE ASSY,FUEL FLOW INDICATOR VENT	1	9
- 26	846FB1/4-1/8	COUPLING,FUEL FLOW INDICATOR VENT/FEMALE/	1	9
- 27	268P1/4-1/8	COUPLING,FUEL FLOW INDICATOR VENT/MALE/	1	9
- 28	96-324038-110	TUBE,FUEL FLOW INDICATOR VENT	1	9
- 29	271P1/4-1/8	TEE,FUEL FLOW INDICATOR VENT	2	9
- 30	96-324038-112	TUBE,FUEL FLOW INDICATOR VENT	1	9
	95-324018-67	TUBE ASSY,FUEL PRESSURE LH	1	10
	96-324038-81	TUBE ASSY,FUEL PRESSURE LH	1	11
- 31	96-324128-27	TUBE ASSY,FUEL PRESSURE LH	1	7
	95-324018-71	TUBE ASSY,FUEL PRESSURE RH	1	10
	96-324038-87	TUBE ASSY,FUEL PRESSURE RH	1	11
	96-324128-31	TUBE ASSY,FUEL PRESSURE RH	1	7
	95-324018-141	BRACKET,TUBE SUPPORT	2	10
- 32	96-324038-93	BRACKET,TUBE SUPPORT	2	12
	AN833-4D	ELBOW,OIL-FUEL PRESSURE	6	1
	AN960-716	WASHER	6	1
	AN924-4D	NUT	6	1
- 33	AN832-4D	UNION,FUEL PRESSURE TUBE	2	1
	AN960-416	WASHER,FUEL PRESSURE TUBE	2	1
	AN924-4D	NUT,FUEL PRESSURE TUBE	2	1
- 34	96-324038-19	TUBE ASSY,FUEL PRESSURE LH	1	6
	96-324128-17	TUBE ASSY,FUEL PRESSURE LH	1	7
- 35	96-324038-17	TUBE ASSY,FUEL PRESSURE RH	1	6
	96-324128-15	TUBE ASSY,FUEL PRESSURE RH	1	7
- 36	AN816-4D	NIPPLE,FUEL PRESSURE INDICATOR	2	1
	95-324018-35	TUBE ASSY,OIL PRESSURE LH	1	10
- 37	96-324038-85	TUBE ASSY,OIL PRESSURE LH	1	12
	95-324018-107	TUBE ASSY,OIL PRESSURE RH	1	10
	96-324038-89	TUBE ASSY,OIL PRESSURE RH	1	11
	96-324128-33	TUBE ASSY,OIL PRESSURE RH	1	7
	96-324038-27	TUBE ASSY,OIL PRESSURE RH	1	6
- 38	96-324128-23	TUBE ASSY,OIL PRESSURE RH	1	7
	96-324038-29	TUBE ASSY,OIL PRESSURE RH	1	6
- 39	96-324128-25	TUBE ASSY,OIL PRESSURE RH	1	7
	95-324018-115	TUBE ASSY,MANIFOLD PRESSURE LH	1	10
	96-324038-83	TUBE ASSY,MANIFOLD PRESSURE LH	1	11
- 40	96-324128-29	TUBE ASSY,MANIFOLD PRESSURE LH	1	7
	95-324018-119	TUBE ASSY,MANIFOLD PRESSURE RH	1	10
	96-324038-91	TUBE ASSY,MANIFOLD PRESSURE RH	1	11
	96-324128-39	TUBE ASSY,MANIFOLD PRESSURE RH	1	7
- 41	AN837-4D	ELBOW,MANIFOLD PRESSURE TUBE	2	1
	AN960-416	WASHER,MANIFOLD PRESSURE TUBE	2	1
	AN924-4D	NUT,MANIFOLD PRESSURE TUBE	2	1
- 42	AN832-4D	UNION,MANIFOLD PRESSURE TUBE	2	1
	AN960-416	WASHER,MANIFOLD PRESSURE TUBE	2	1
	AN924-4D	NUT,MANIFOLD PRESSURE TUBE	2	1
	96-324038-11	TUBE ASSY,MANIFOLD PRESSURE LH	1	6
- 43	96-324028-13	TUBE ASSY,MANIFOLD PRESSURE LH	1	7
	96-324038-9	TUBE ASSY,MANIFOLD PRESSURE RH	1	6
	96-324128-11	TUBE ASSY,MANIFOLD PRESSURE RH	1	7
- 44	AN816-4	NIPPLE,MANIFOLD PRESSURE INDICATOR	2	1

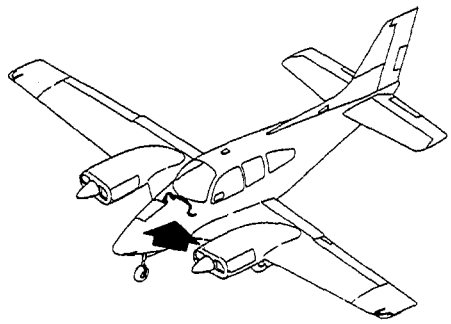

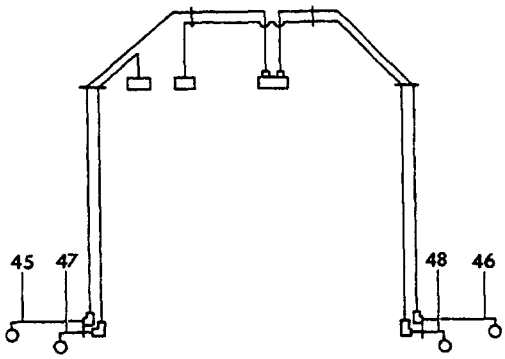

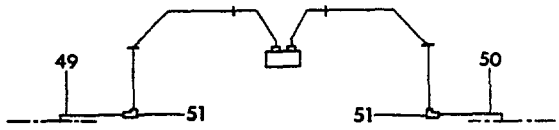

VIEW **A**

55-393-22

FIGURE 17-10. INSTRUMENT PLUMBING
/SHEET 3 OF 3 SHEETS/

ATA CODE & INDEX NO.	PART NO.	DESCRIPTION 1 2 3 4 5 6 7	UNITS PER ASSY	USABLE ON CODE
17-10 - 45	96-324018-5	. TUBE ASSY,FUEL PRESSURE LH.	1	1
- 46	96-324018-6	. TUBE ASSY,FUEL PRESSURE RH.	1	1
	96-324018-7	. TUBE ASSY,OIL PRESSURE LH	1	13
- 47	96-324038-107	. TUBE ASSY,OIL PRESSURE LH	1	14
	96-324018-8	. TUBE ASSY,OIL PRESSURE RH	1	13
- 48	96-324038-108	. TUBE ASSY,OIL PRESSURE RH	1	14
	96-324018-3	. TUBE ASSY,MANIFOLD PRESSURE LH.	1	13
- 49	96-324038-103	. TUBE ASSY,MANIFOLD PRESSURE LH.	1	14
	96-324018-4	. TUBE ASSY,MANIFOLD PRESSURE RH.	1	13
- 50	96-324038-104	. TUBE ASSY,MANIFOLD PRESSURE RH.	1	14
- 51	AN837-4D	. ELBOW,OIL-FUEL-MANIFOLD PRESSURE.	6	1
	AN960-416	. WASHER,OIL-FUEL-MANIFOLD PRESSURE	6	1
	AN924-4D	. NUT,OIL-FUEL-MANIFOLD PRESSURE.	6	1

CODES OF EFFECTIVITY

1	TC-191 THRU TC-1607 TE-1 THRU TE-451	2	TC-191 THRU TC-844
3	TC-845 THRU TC-1607 TE-1 THRU TE-451	4	TC-845 THRU TC-909
5	TC-910 THRU TC-1607 TE-1 THRU TE-451	6	TC-191 THRU TC-1042 TE-1 THRU TE-451
7	TC-1043 THRU TC-1607	8	TC-191 THRU TC-909
9	TC-1024 THRU TC-1607 TE-273 THRU TE-451	10	TC-191 THRU TC-972 TE-1 THRU TE-21
11	TC-973 THRU TC-1042 TE-22 THRU TE-451	12	TC-973 THRU TC-1607 TE-22 THRU TE-451
13	TC-191 THRU TC-1607	14	TE-1 THRU TE-451

"END"

39-17-20
INSTRUMENT PANEL PLUMBING
TE-452 THRU TE-767

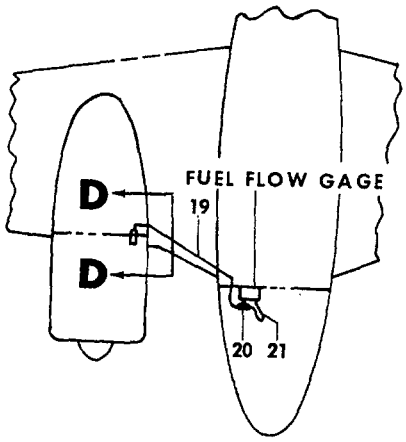

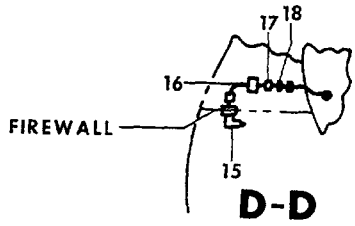

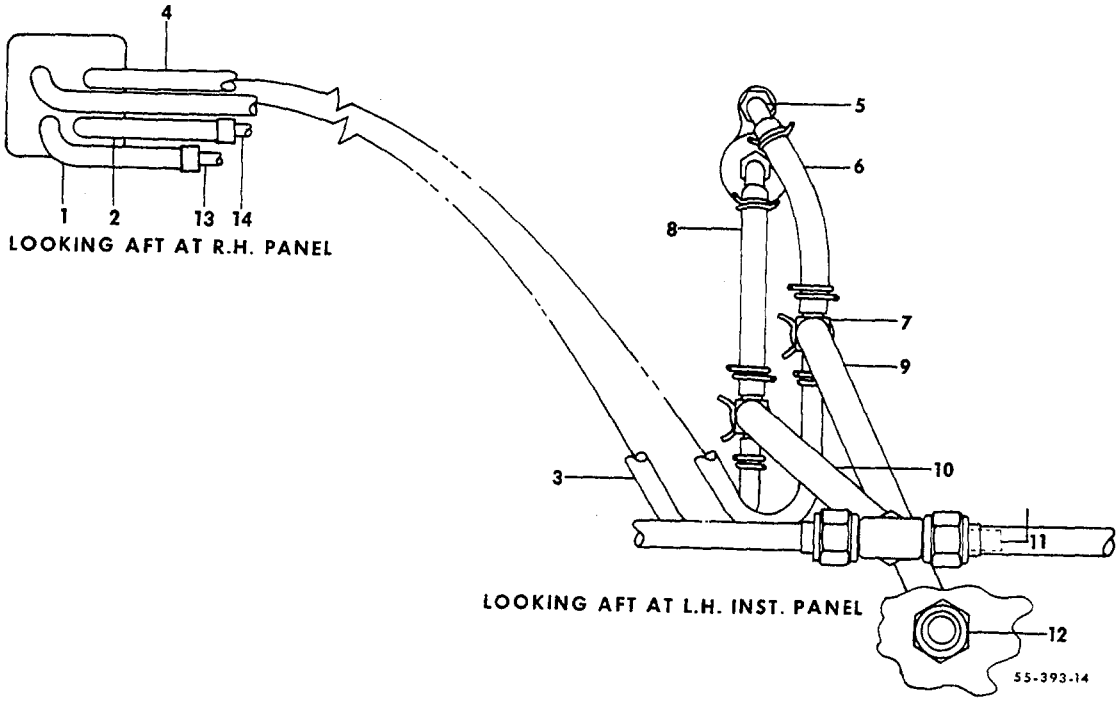

FIGURE 17-20. INSTRUMENT PLUMBING
/SHEET 1 OF 2 SHEETS/

ATA CODE & INDEX NO.	PART NO.	DESCRIPTION 1 2 3 4 5 6 7	UNITS PER ASSY	USABLE ON CODE
17-20	96-324128	PLUMBING INSTL,INSTRUMENT PANEL	NP	1
- 1	96-324128-63	. TUBE,PRESSURE INDICATOR AIR	1	1
- 2	96-324128-61	. TUBE,PRESSURE INDICATOR AIR	1	1
		/ATTACHING PARTS/		
	A6	. CLAMP	2	
		----*----		
- 3	95-324078-35	. TUBE,PRESSURE INDICATOR PRESSURE.	1	1
- 4	95-324078-37	. TUBE,PRESSURE INDICATOR VENT.	1	1
		/ATTACHING PARTS/		
	A6	. CLAMP	2	
		----*----		
- 5	1K9-4-6	. ELBOW,HORIZON GYRO.	4	1
- 6	95-324078-29	. TUBE,HORIZON GYRO VENT LH	1	1
	95-324078-41	. TUBE,HORIZON GYRO VENT RH	1	1
		/ATTACHING PARTS/		
	A8	. CLAMP	2	
		----*----		
- 7	1K17-1	. FITTING,DIRECTIONAL GYRO TEE LH	2	1
	1K17-2	. FITTING,DIRECTIONAL GYRO TEE RH	2	1
- 8	95-324078-27	. TUBE,HORIZON GYRO PRESSURE LH	1	1
	95-324078-39	. TUBE,HORIZON GYRO PRESSURE RH	1	1
		/ATTACHING PARTS/		
	A6	. CLAMP	2	
		----*----		
- 9	95-324078-33	. TUBE,DIRECTIONAL GYRO VENT LH	1	1
	95-324078-45	. TUBE,DIRECTIONAL GYRO VENT RH	1	1
		/ATTACHING PARTS/		
	A10	. CLAMP	1	
		----*----		
- 10	95-324078-31	. TUBE,DIRECTIONAL GYRO PRESSURE LH	1	1
	95-324078-43	. TUBE,DIRECTIONAL GYRO PRESSURE RH	1	1
		/ATTACHING PARTS/		
	A10	. CLAMP	1	
		----*----		
- 11	96-324128-9	. TUBE ASSY,INSTRUMENT AIR PRESSURE	2	1
- 12	AN807-8D	. ADAPTER,INSTRUMENT AIR TUBE	2	1
	AN960-1216	. WASHER,INSTRUMENT AIR ADAPTER	2	1
	AN924-8D	. NUT,INSTRUMENT AIR ADAPTER.	2	1
- 13	96-324012-35	. TUBE,INSTRUMENT AIR	1	1
- 14	96-324012-33	. TUBE,INSTRUMENT AIR	1	1
- 15	AN833-4	. ELBOW,FUEL FLOW INDICATOR VENT TUBE	1	1
	AN960-416L	. WASHER,FUEL FLOW INDICATOR VENT TUBE.	2	1
	AN924-4	. NUT,FUEL FLOW INDICATOR VENT TUBE	1	1
- 16	95-324072-51	. TUBE ASSY,FUEL FLOW INDICATOR VENT.	1	1
- 17	846F81/4-1/8	. COUPLING,FUEL FLOW INDICATOR VENT/FEMALE/ . .	1	1
- 18	268P1/4-1/8	. COUPLING,FUEL FLOW INDICATOR VENT/MALE/ . . .	2	1
- 19	96-324038-110	. TUBE,FUEL FLOW INDICATOR VENT	1	1
- 20	271P1/4-1/8	. TEE,FUEL FLOW INDICATOR VENT.	1	1
- 21	96-324038-112	. TUBE,FUEL FLOW INDICATOR VENT	1	1

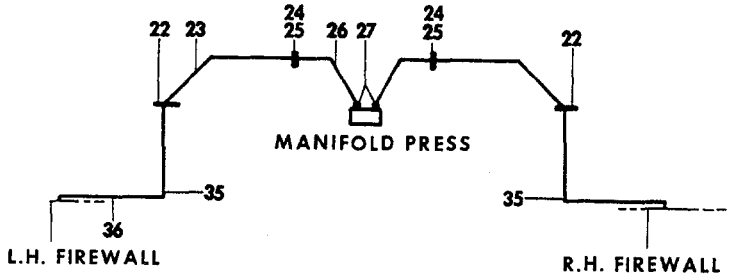

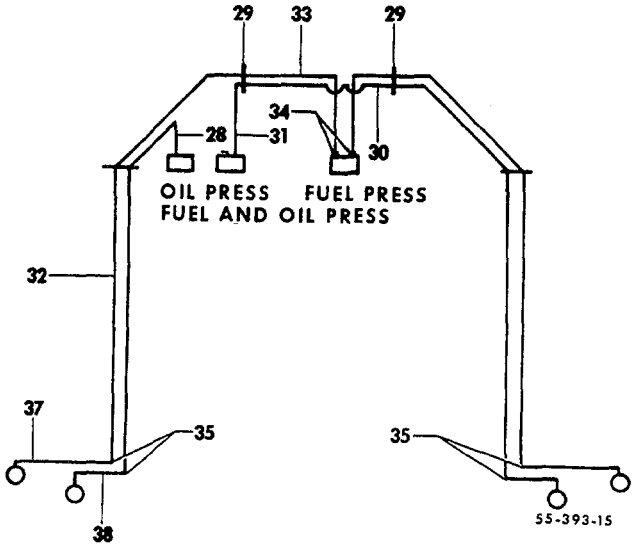

FIGURE 17-20. INSTRUMENT PLUMBING
/SHEET 2 OF 2 SHEETS/

ATA CODE & INDEX NO.	PART NO.	DESCRIPTION 1 2 3 4 5 6 7	UNITS PER ASSY	USABLE ON CODE
17-20 - 22	96-324038-93	BRACKET,MANIFOLD PRESSURE TUBE	2	1
- 23	96-324128-17	TUBE ASSY,MANIFOLD PRESSURE LH	1	1
	96-324128-11	TUBE ASSY,MANIFOLD PRESSURE RH	1	1
- 24	AN833-4D	ELBOW,MANIFOLD PRESSURE TUBE	2	1
	AN960-416	WASHER,MANIFOLD PRESSURE TUBE	2	1
	AN924-4D	NUT,MANIFOLD PRESSURE TUBE	2	1
- 25	95-324018-141	BRACKET,MANIFOLD PRESSURE TUBE	2	1
- 26	96-324128-15	TUBE ASSY,MANIFOLD PRESSURE LH	1	1
	96-324128-13	TUBE ASSY,MANIFOLD PRESSURE RH	1	1
- 27	AN816-4	NIPPLE,MANIFOLD PRESSURE TUBE	2	1
- 28	96-324038-99	TUBE ASSY,OIL PRESSURE LH	1	1
	96-324128-25	TUBE ASSY,OIL PRESSURE RH	1	1
- 29	AN833-4D	UNION,OIL AND FUEL PRESSURE TUBE	4	1
	AN960-416	WASHER,OIL AND FUEL PRESSURE TUBE	4	1
	AN924-4D	NUT,OIL AND FUEL PRESSURE TUBE	4	1
- 30	96-324128-29	TUBE ASSY,OIL PRESSURE RH	1	1
- 31	96-324128-33	TUBE ASSY,OIL PRESSURE RH	1	1
- 32	96-324128-39	TUBE ASSY,FUEL PRESSURE LH	1	1
	96-324128-23	TUBE ASSY,FUEL PRESSURE RH	1	1
- 33	96-324128-31	TUBE ASSY,FUEL PRESSURE LH	1	1
	96-324128-27	TUBE ASSY,FUEL PRESSURE RH	1	1
- 34	AN816-4D	NIPPLE,FUEL PRESSURE TUBE	2	1
- 35	AN837-4D	ELBOW,OIL-FUEL-MANIFOLD PRESSURE	6	1
	AN960-716	WASHER,OIL-FUEL-MANIFOLD PRESSURE	6	1
	AN924-4D	NUT,OIL-FUEL-MANIFOLD PRESSURE	6	1
- 36	96-324038-103	TUBE,MANIFOLD PRESSURE LH	1	1
	96-324038-104	TUBE,MANIFOLD PRESSURE RH	1	1
- 37	96-324038-105	TUBE,FUEL PRESSURE LH	1	1
	96-324038-106	TUBE,FUEL PRESSURE RH	1	1
- 38	96-324038-107	TUBE,OIL PRESSURE LH	1	1
	96-324038-108	TUBE,OIL PRESSURE RH	1	1

CODES OF EFFECTIVITY

1 TE-452 THRU TE-767

"END"

39-17-30
INSTRUMENT PANEL PLUMBING
TE-768 THRU TE-942 EXCEPT TE-938

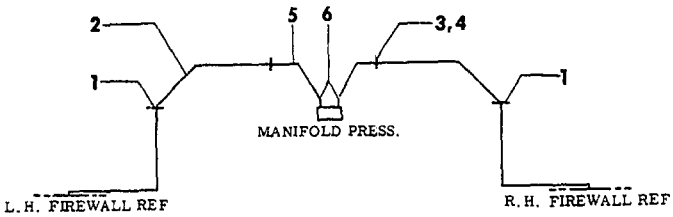

MANIFOLD PRESS. SCHEMATIC

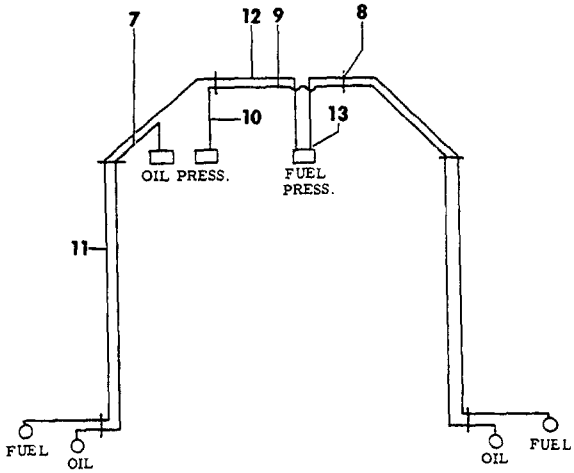

FUEL & OIL PRESS. SCHEMATIC

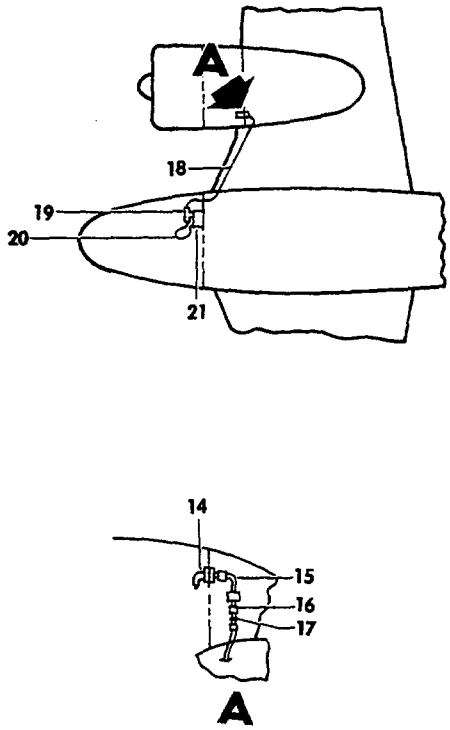

55-393-18

FIGURE 17-30. INSTRUMENT PLUMBING
/SHEET 1 OF 2 SHEETS/

ATA CODE & INDEX NO.	PART NO.	DESCRIPTION 1 2 3 4 5 6 7	UNITS PER ASSY	USABLE ON CODE
17-30	96-324128-1	PLUMBING INSTL,INSTRUMENT PANEL/SINGLE/	NP	1
	96-324128-3	PLUMBING INSTL,INSTRUMENT PANEL/DUAL/	NP	1
- 1	96-324038-93	. BRACKET,MANIFOLD PRESSURE TUBE.	2	1
- 2	96-324128-17	. TUBE ASSY,MANIFOLD PRESSURE LH.	1	1
	96-324128-11	. TUBE ASSY,MANIFOLD PRESSURE RH.	1	1
- 3	AN833-4D	. ELBOW,MANIFOLD PRESSURE TUBE.	2	1
	AN960PD716	. WASHER,MANIFOLD PRESSURE TUBE	2	1
	AN924-4D	. NUT,MANIFOLD PRESSURE TUBE.	2	1
- 4	95-324018-141	. BRACKET,MANIFOLD PRESSURE TUBE.	2	1
- 5	96-324128-15	. TUBE ASSY,MANIFOLD PRESSURE LH.	1	1
	96-324128-13	. TUBE ASSY,MANIFOLD PRESSURE RH.	1	1
- 6	AN816-4D	. NIPPLE,MANIFOLD PRESSURE TUBE	2	1
- 7	96-324038-99	. TUBE ASSY,OIL PRESSURE LH	1	1
	96-324128-25	. TUBE ASSY,OIL PRESSURE RH	1	1
- 8	AN833-4D	. ELBOW,OIL-FUEL PRESSURE TUBE.	4	1
	AN960-416	. WASHER,OIL-FUEL PRESSURE TUBE	4	1
	AN924-4D	. NUT,OIL-FUEL PRESSURE TUBE.	4	1
- 9	96-324128-29	. TUBE ASSY,OIL PRESSURE RH	1	1
- 10	96-324128-33	. TUBE ASSY,OIL PRESSURE RH	1	1
- 11	96-324128-39	. TUBE ASSY,FUEL PRESSURE LH.	1	1
	96-324128-23	. TUBE ASSY,FUEL PRESSURE RH.	1	1
- 12	96-324128-31	. TUBE ASSY,FUEL PRESSURE LH.	1	1
	96-324128-27	. TUBE ASSY,FUEL PRESSURE RH.	1	1
- 13	AN816-4D	. NIPPLE,FUEL PRESSURE TUBE	2	1
- 14	AN833-4	. ELBOW,FUEL FLOW INDICATOR VENT TUBE	1	1
	AN960-416L	. WASHER,FUEL FLOW INDICATOR VENT TUBE.	2	1
	AN924-4D	. NUT,FUEL FLOW INDICATOR VENT TUBE	1	1
- 15	95-324072-51	. TUBE ASSY,FUEL FLOW INDICATOR VENT.	1	1
- 16	846F81/4-1/8	. COUPLING,FUEL FLOW INDICATOR VENT/FEMALE/ . .	1	1
- 17	268P1/4-1/8	. COUPLING,FUEL FLOW INDICATOR VENT/MALE/ . . .	2	1
- 18	96-324038-110	. TUBE,FUEL FLOW INDICATOR VENT	1	1
- 19	271P1/4-1/8	. TEE,FUEL FLOW INDICATOR VENT.	1	1
- 20	96-324038-112	. TUBE,FUEL FLOW INDICATOR VENT	1	1
- 21	268P1/4-1/8	. CONNECTOR,FUEL FLOW INDICATOR VENT/MALE/. . .	1	1

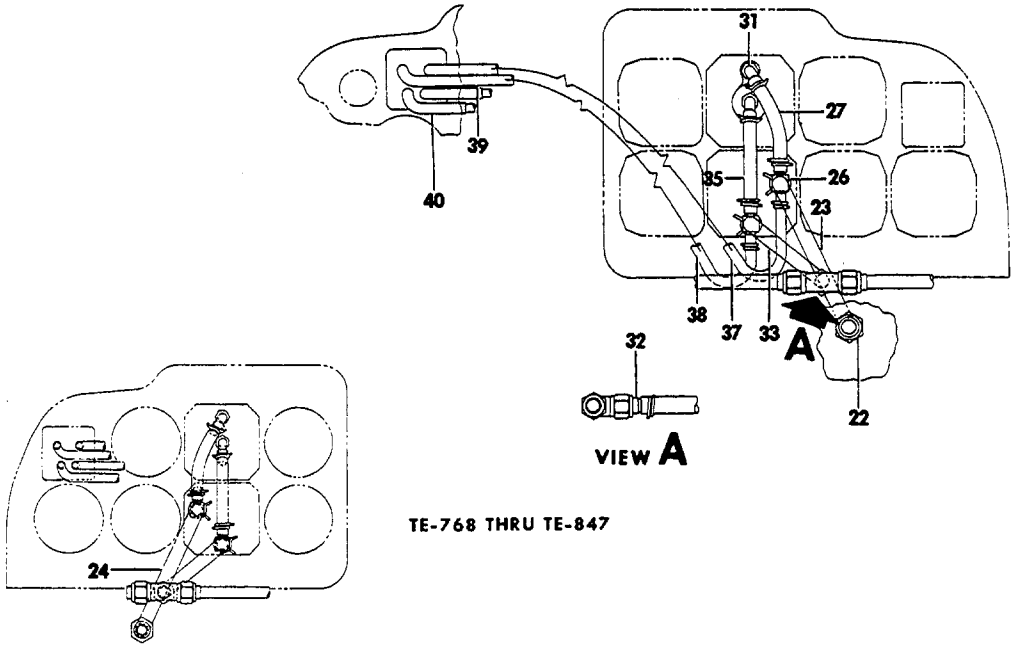

TE-768 THRU TE-847

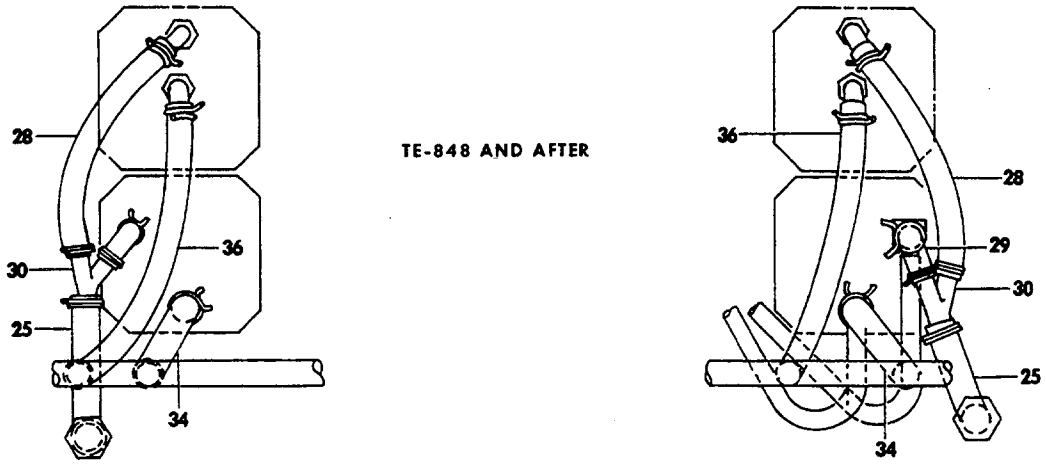

TE-848 AND AFTER

55-393-19

FIGURE 17-30. INSTRUMENT PLUMBING
/SHEET 2 OF 2 SHEETS/

ATA CODE & INDEX NO.	PART NO.	DESCRIPTION 1 2 3 4 5 6 7	UNITS PER ASSY	USABLE ON CODE
17-30 - 22	AN807-8D	ADAPTER,INSTRUMENT AIR TUBE	2	1
	AN960PD1216	WASHER,INSTRUMENT AIR ADAPTER	2	1
	AN924-8D	NUT,INSTRUMENT AIR ADAPTER	2	1
- 23	96-324078-33	TUBE,DIRECTIONAL GYRO VENT LH	1	2
- 24	96-324078-45	TUBE,DIRECTIONAL GYRO VENT RH	1	2
- 25	96-324128-91	TUBE,DIRECTIONAL GYRO VENT/LH & RH/	2	3
		/ATTACHING PARTS/		
	A10	CLAMP	1	
		----*----		
- 26	1K17-1	FITTING,DIRECTIONAL GYRO TEE LH	2	1
	1K10-4-8	FITTING,DIRECTIONAL GYRO TEE RH	2	1
- 27	106200H6-24	TUBE,HORIZON GYRO VENT LH	1	2
	96-324078-41	TUBE,HORIZON GYRO VENT RH	1	2
- 28	96-324128-85	TUBE,HORIZON GYRO VENT/LH & RH/	2	3
		/ATTACHING PARTS/		
	A10	CLAMP	2	
		----*----		
- 29	96-324128-93	TUBE,INSTRUMENT AIR PRESSURE	2	3
- 30	64017	CONNECTOR,VENT/Y-TYPE/	2	3
- 31	1K9-4-8	ELBOW,HORIZON GYRO	2	1
- 32	96-324128-9	TUBE ASSY,INSTRUMENT AIR PRESSURE	1	1
- 33	95-324078-31	TUBE,DIRECTIONAL GYRO PRESSURE LH	1	2
	95-324078-43	TUBE,DIRECTIONAL GYRO PRESSURE RH	1	2
- 34	96-324128-89	TUBE,DIRECTIONAL GYRO PRESSURE/LH & RH/	2	3
		/ATTACHING PARTS/		
	A10	CLAMP	1	
		----*----		
- 35	106200H6-24	TUBE,HORIZON GYRO PRESSURE LH	1	2
	95-324078-39	TUBE,HORIZON GYRO PRESSURE RH	1	2
- 36	96-324128-87	TUBE,HORIZON GYRO PRESSURE/LH & RH/	2	3
		/ATTACHING PARTS/		
	A10	CLAMP	2	
		----*----		
	1K17-3	ELBOW,HORIZON GYRO PRESSURE	2	3
- 37	95-324078-37	TUBE,PRESSURE INDICATOR VENT	1	1
- 38	95-324078-35	TUBE,PRESSURE INDICATOR VENT	1	1
- 39	96-324128-61	TUBE,PRESSURE INDICATOR AIR	1	1
- 40	96-324128-63	TUBE,PRESSURE INDICATOR AIR	1	1
		/ATTACHING PARTS/		
	A6	CLAMP	1	
		----*----		

CODES OF EFFECTIVITY

1 TE-768 THRU TE-942 EXCEPT TE-938
2 TE-768 THRU TE-847
3 TE-848 THRU TE-942 EXCEPT TE-938

"END"

CHAPTER 52

DOORS

LIST OF PAGES & TABLE OF CONTENTS
FOR
CHAPTER 52-00-00 DOORS

CHAP/SUB-SECT & UNIT	PAGE NO.	EFFECTIVE DATE	TABLE OF CONTENTS
52-00-00	1	04/05/85.	LIST OF PAGES & TABLE OF CONTENTS . . . . .
52-10-01	1	03/10/78.	CABIN DOOR INSTALLATION . . . . .
52-10-01	2	03/10/78	TC-1 THRU TC-1142,TE-1 THRU TE-767
52-10-01	3	04/05/85	
52-10-01	4	03/10/78	
52-10-01	5	03/10/78	
52-10-01	6	03/10/78	
52-10-01	7	04/05/85	
52-10-02	1	03/10/78.	CABIN DOOR INSTALLATION . . . . .
52-10-02	2	03/10/78	TC-1143 THRU TC-1607,TE-768 THRU TE-942
52-10-02	3	03/10/78	EXCEPT TE-938
52-10-02	4	03/10/78	
52-10-02	5	03/10/78	
52-10-02	6	03/10/78	
52-10-02	7	04/05/85	
52-20-01	1	03/10/78.	EMERGENCY EXIT. . . . .
52-20-01	2	03/10/78	
52-20-01	3	03/10/78	
52-20-01	4	03/10/78	
52-20-01	5	04/05/85	
52-30-01	1	03/10/78.	CABIN BAGGAGE DOOR. . . . .
52-30-01	2	03/10/78	
52-30-01	3	03/10/78	
52-32-01	1	03/10/78.	UTILITY BAGGAGE DOOR. . . . .
52-32-01	2	03/10/78	
52-32-01	3	04/05/85	
52-32-01	4	03/10/78	
52-32-01	5	04/05/85	
52-35-01	1	04/05/85.	NOSE BAGGAGE DOOR . . . . .
52-35-01	2	03/10/78	TC-1 THRU TC-1607;TE-1 THRU TE-451
52-35-01	3	04/05/85	
52-35-02	1	03/10/78.	NOSE BAGGAGE DOOR . . . . .
52-35-02	2	03/10/78	TE-452 THRU TE-942 EXCEPT TE-938
52-35-02	3	04/05/85	
52-35-02	4	03/10/78	
52-35-02	5	04/05/85	
52-60-01	1	03/10/78.	ASSIST STEP . . . . .
52-60-01	2	03/10/78	
52-60-01	3	04/05/85	

52-10-01
CABIN DOOR INSTALLATION
TC-1 THRU TC-1142,TE-1 THRU TE-767

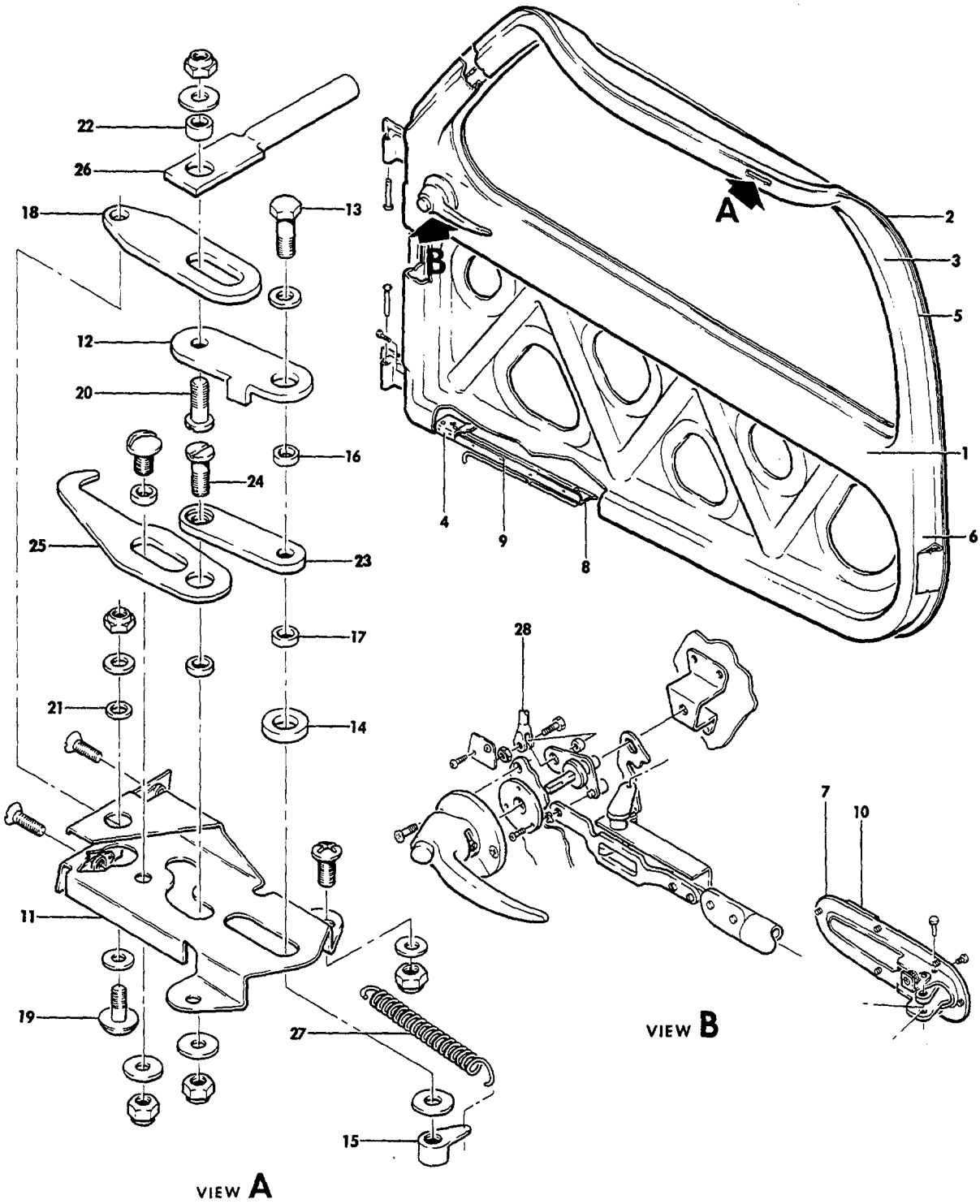

FIGURE 10-01.CABIN DOOR
/SHEET 1 OF 3 SHEETS/

SUB-SECT UNIT & ITEM NO.	PART NO.	DESCRIPTION 1 2 3 4 5 6 7	UNITS PER ASSY	USABLE ON CODE
10-01	95-420012-605	DOOR ASSY,CABIN/TINTED 1/8 IN. THICK/	1	2
	95-420012-606	. DOOR ASSY,CABIN/TINTED 1/8 IN. THICK/	1	3
	95-420012-608	DOOR ASSY,CABIN/TINTED 1/4 IN. THICK/	1	4
- 1	35-400010-62	. PANEL/SUPERSEDES 35-400010-58/	1	1
- 2	35-400010-66	. SKIN/SUPERSEDES 35-400010-4/	1	1
- 3	35-400010-6	. FRAME,UPPER	1	1
- 4	35-400010-8	. REINFORCEMENT	1	1
- 5	35-400010-14	. REINFORCEMENT	1	1
- 6	35-400010-18	. REINFORCEMENT	1	1
	AN3-4A	. BOLT	2	1
	AN960-10	. WASHER	3	1
	AN365-1032	. NUT	3	1
	AN507-1032R20	. SCREW	1	1
	AN507-832R7	. SCREW	1	1
- 7	35-400032-2	. SUPPORT,OUTSIDE DOOR HANDLE	1	1
- 8	35-400329-2	. REINFORCEMENT,DOOR STAY GUIDE	8	1
- 9	35-400029-4	. GUIDE,DOOR STAY	1	1
- 10	35-400414	. GUIDE,DOOR LATCH	1	1
	35-410456-601	. LATCH ASSY,DOOR	1	1
- 11	35-410456-3	. . BRACKET,UPPER	1	1
- 12	35-410456-31	. . LINK ASSY	1	1
		/ATTACHING PARTS/		
- 13	AN3-6A	. . BOLT	1	
- 14	100951X100YF	. . WASHER	1	
	AN960-10	. . WASHER	1	
- 15	35-410456-21	. . NUT	1	
		——*——		
- 16	105739X-ZR0110	. . BUSHING	2	1
- 17	105739X-ZR0173	. . BUSHING	2	5
	105739X-ZR0187	. . BUSHING	2	6
- 18	35-410456-11	. . LINK,UPPER LATCH	1	1
		/ATTACHING PARTS/		
- 19	AN525-10R7	. . SCREW	1	
- 20	35-410456-17	. . STUD	1	
	AN960-10L	. . WASHER	2	
	AN960-10	. . WASHER	1	
	MS20365-1032	. . NUT	1	
		——*——		
- 21	105739X-ZR0070	. . BUSHING	1	1
- 22	105739X-ZR0220	. . BUSHING	1	1
- 23	35-410456-7	. . LINK,UPPER LATCH	1	1
		/ATTACHING PARTS/		
- 24	35-410456-17	. . STUD	1	
	AN960-10	. . WASHER	1	
	MS20365-1032	. . NUT	1	
		——*——		
- 25	35-410456-5	. . LATCH,DOOR UPPER	1	1
- 26	35-410456-13	. . TERMINAL	1	1
- 27	100942H0022-22	. . SPRING	1	1
	MK2000-06	. . NUTPLATE	1	1
	NAS697A08	. . NUTPLATE	1	1
- 28	AN665-21R	. CLEVIS	1	1
	R 35-400320-54	. SEAL,DOOR	1	
	R 35-400320-50	. SEAL,DOOR/BETWEEN HINGES/	1	
	R 35-400018	. HINGE ASSY,CABIN DOOR UPPER & LOWER	2	19
	R 35-400018-8	. HINGE ASSY,CABIN DOOR UPPER & LOWER	2	20
	R 35-400018-12	. HINGE ASSY,CABIN DOOR UPPER	1	21
	R 35-400018-18	. HINGE ASSY,CABIN DOOR UPPER	1	22
	R 35-400018-12	. HINGE ASSY,CABIN DOOR LOWER	1	21

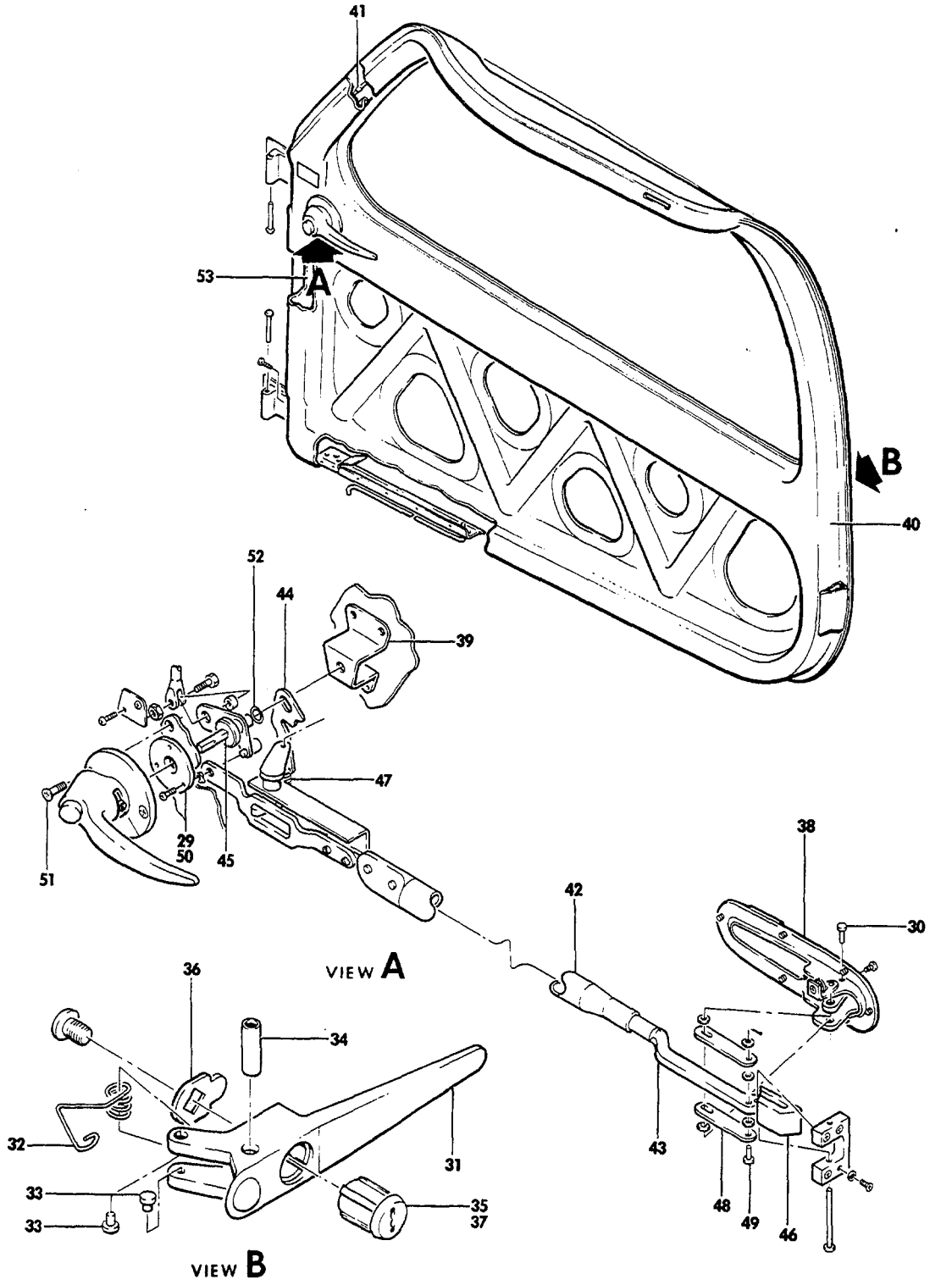

FIGURE 10-01.CABIN DOOR
/SHEET 2 OF 3 SHEETS/

ATA CODE & INDEX NO.	PART NO.	DESCRIPTION 1 2 3 4 5 6 7	UNITS PER ASSY	USABLE ON CODE
10-01 - 29	35-400395	. PLATE,INSIDE DOOR HANDLE.	1	1
	35-400014-603	. HANDLE ASSY,DOOR OUTSIDE.	1	7
	35-400014-609	. HANDLE ASSY,DOOR OUTSIDE.	1	8
	35-400014-610	. HANDLE ASSY,DOOR OUTSIDE.	1	9
		/ATTACHING PARTS/		
- 30	MS20392-2-37	. PIN/SUPERSEDES AN395-37/.	1	
		——*——		
	35-400013	. . HANDLE.	1	17
- 31	35-400013-1	. . HANDLE.	1	18
	35-400031	. . SPRING.	1	17
- 32	35-400031-1	. . SPRING.	1	18
- 33	35-400033	. . STUD.	2	1
- 34	101321-00A0750	. . BUSHING	1	1
- 35	F6100X2	. . PLUG.	1	1
- 36	35-400044	. . CAM	1	17
	35-400044-1	. . CAM	1	18
- 37	35-590070-15	. . LOCKSET	1	7
	35-590070-33	. . LOCKSET	1	8
	35-590070-43	. . LOCKSET	1	9
- 38	35-400404	. SEAL,OUTSIDE HANDLE SUPPORT	1	1
- 39	35-400036	. SUPPORT,INSIDE HANDLE SHAFT	1	1
	35-400010-42	. BRAZE ASSY,CABLE.	1	10
- 40	35-400010-40	. . BRAZE ASSY.	1	10
- 41	9461	. . CABLE/34-7/16/.	1	10
	HE636	. CABLE ASSY.	1	11
- 42	35-400461-2	. TUBE.	1	1
- 43	35-400461-4	. ADAPTER	1	1
- 44	35-400462	. STOP,INSIDE DOOR.	1	1
- 45	35-400464-6	. SHAFT ASSY,DOOR HANDLE INSIDE	1	12
	35-400464-8	. SHAFT ASSY,DOOR HANDLE INSIDE	1	13
	35-400423	. . BEARING	1	1
- 46	35-400417	. BOLT,DOOR LATCH	1	1
- 47	100942L0023-17	. SPRING,STOP	1	1
- 48	35-400041	. LINK,DOOR OUTSIDE HANDLE.	2	1
		/ATTACHING PARTS/		
- 49	AN392-13	. PIN	1	
	AN960-6	. WASHER.	1	
	5171	. WASHER,SPRING	AR	
	AN380-2-2	. PIN,COTTER.	1	
		——*——		
- 50	35-400435	. PLATE ASSY,INSIDE DOOR HANDLE	1	12
		/ATTACHING PARTS/		
- 51	AN507-632-6	. SCREW	2	
	100951CR020WP	. WASHER.	AR	
	100951CR032WP	. WASHER/ALTERNATE FOR 100951CR020WP/	AR	
		——*——		
- 52	102933S4ZJ0093	. SPACER.	1	1
- 53	35-400010-28	. STIFFENER	1	1

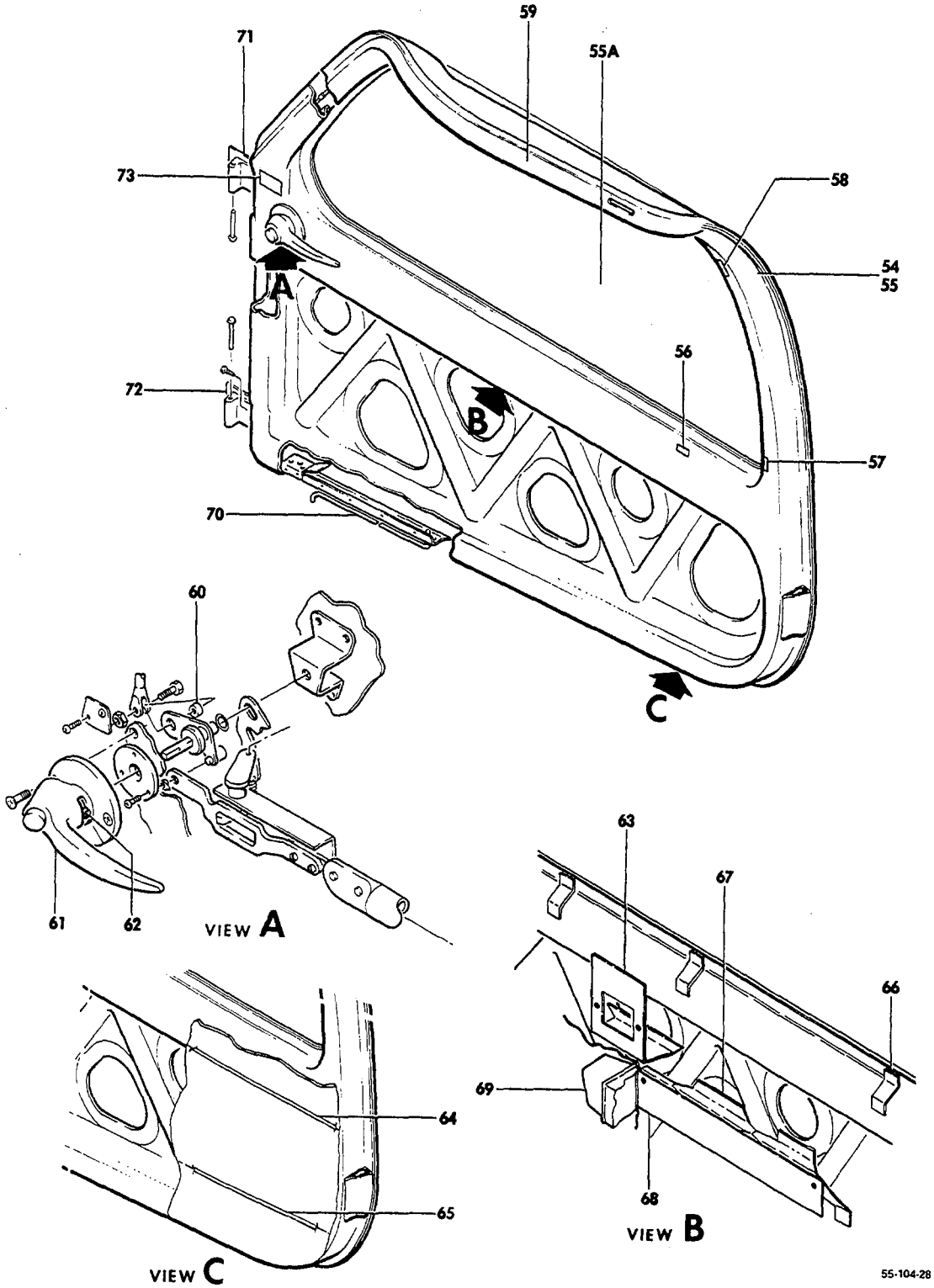

FIGURE 10-01.CABIN DOOR
/SHEET 3 OF 3 SHEETS/

SUB-SECT UNIT & ITEM NO.	PART NO.	DESCRIPTION 1 2 3 4 5 6 7	UNITS PER ASSY	USABLE ON CODE
10-01 - 54	35-400320-32	. SASH ASSY/1/8 IN. WINDOW/	1	1
	95-420012-15	. SASH ASSY/1/4 IN. WINDOW/	1	1
		/ATTACHING PARTS/		
- 55	AN507-632R6	. SCREW	48	
		----*----		
- 55A	35-400320-34	. . GLASS/WITH 1/8 IN. WINDOW/.	1	1
	95-420012-17	. . GLASS/WITH 1/4 IN. WINDOW/.	1	1
	35-400320-6	. . FRAME	1	1
	35-400320-8	. . RETAINER.	1	1
	35-410315	. CLIP.	14	14
	35-400320-52	. CLIP.	1	14
- 56	35-400320-9	. CLIP.	8	15
- 57	35-400320-68	. CLIP.	8	15
- 58	35-400320-52	. CLIP.	1	15
	35-400320-20	. MOULDING.	1	2
- 59	35-400320-66	. MOULDING.	1	3
- 60	35-400467-3	. BUSHING,INSIDE DOOR HANDLE.	1	12
- 61	2104	. HANDLE ASSY,INSIDE DOOR	1	12
	95-380010	. HANDLE ASSY,INSIDE DOOR	1	13
		/ATTACHING PARTS/		
- 62	35-400465	. PIN	1	12
	AN507-832R18	. SCREW	2	13
		----*----		
	96-530001-213	. BRACKET ASSY,ASH TRAY	1	2
	96-530001-155	. BRACKET,ASH TRAY.	1	2
- 63	35-534415-7	. BRACKET ASSY,ASH TRAY	16	
- 64	96-530001-75	. STRIP,TRIM.	1	2
- 65	96-530001-77	. STRIP,TRIM.	1	1
- 66	96-530002-69	. CLIP.	3	16
- 67	33-534024-15	. BRACKET,ARM REST.	1	16
- 68	35-534413-19	. PLATE ASSY,ARM REST	1	16
- 69	455-28	. HANDLE.	1	2
		/ATTACHING PARTS/		
	AN507-832R	. SCREW	2	
		----*----		
- 70	95-420012-3	. ROD ASSY,CABIN DOOR LOWER	1	1
- 71	35-410435	SEAL,CABIN DOOR UPPER HINGE	1	1
- 72	35-410436	SEAL,CABIN DOOR LOWER HINGE	1	1
	50-400366-1	. PLACARD,LOCKED.	2	1
	50-400352-1	. PLACARD,CABIN DOOR LOCKING PROCEDURE.	1	2
- 73	35-400472	. PLACARD,CABIN DOOR LOCKING PROCEDURE.	1	16

CODES OF EFFECTIVITY

1	TC-1 THRU TC-1142 TE-1 THRU TE-767	2	TC-1 THRU TC-190
3	TC-191 THRU TC-1142 TE-1 THRU TE-767	4	TC-221 THRU TC-1142 TE-1 THRU TE-767
5	TC-1 THRU TC-295	6	TC-296 THRU TC-1142
7	TC-1 THRU TC-560	8	TC-561 THRU TC-831
9	TC-832 THRU TC-1142 TE-1 THRU TE-767	10	TC-1 THRU TC-945
11	TC-966 THRU TC-1142 TE-1 THRU TE-767	12	TC-1 THRU TC-342
13	TC-343 THRU TC-1142 TE-1 THRU TE-767	14	TC-1 THRU TC-168
15	TC-169 THRU TC-1142 TE-1 THRU TE-767	16	TC-191 THRU TC-1142
17	TC-1 THRU TC-1125 TE-1 THRU TE-598	18	TC-1126 THRU TC-1142 TE-599 THRU TE-767
19	TC-1 THRU TC-1028 TE-1 THRU TE-331	20	TC-1029 THRU TC-1032 TE-332 THRU TE-390
21	TC-1033 THRU TC-1607 TE-391 THRU TE-767		

52-10-02
CABIN DOOR INSTALLATION
TC-1143 THRU TC-1607,TE-768 THRU TE-942
EXCEPT TE-938

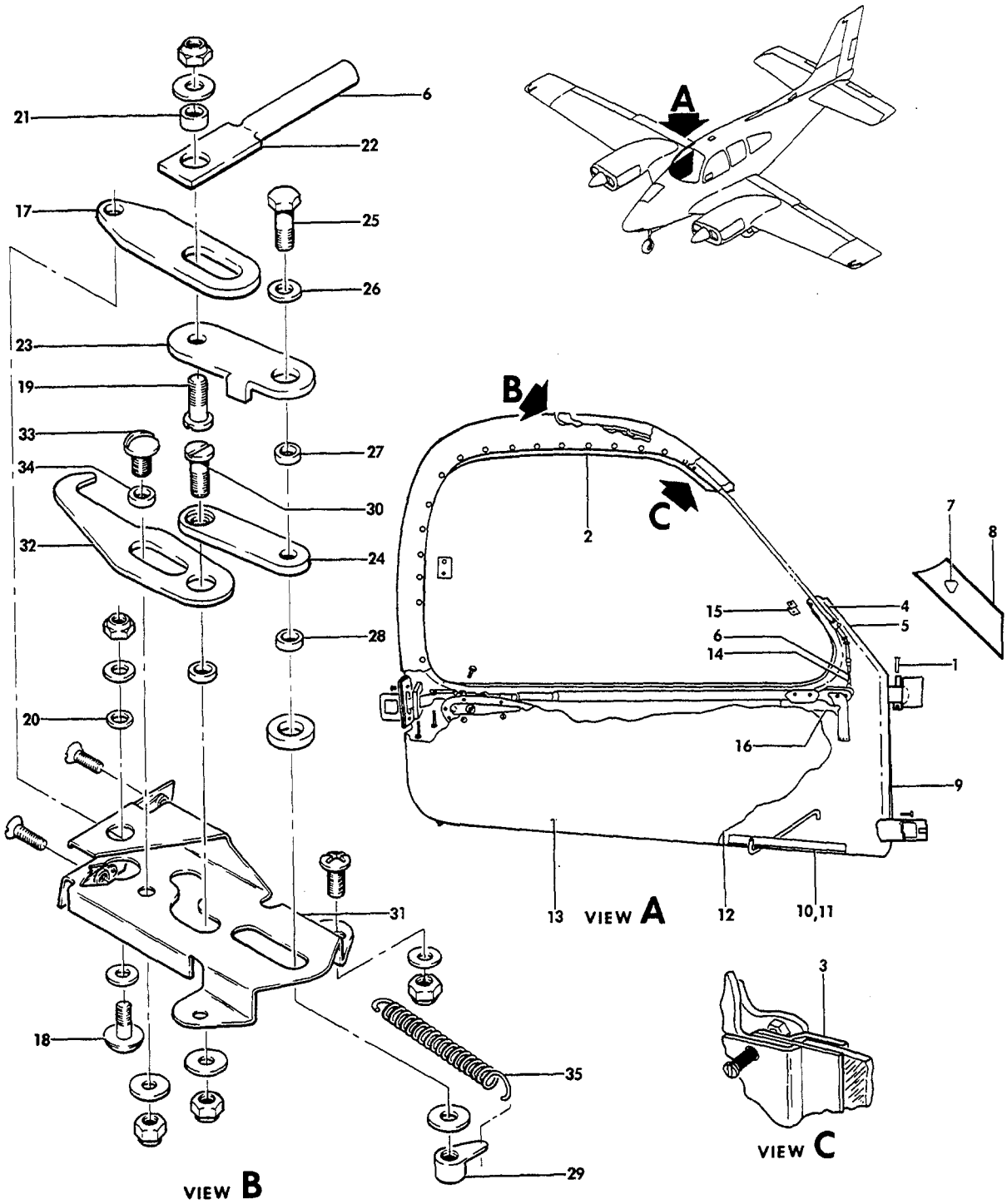

FIGURE 10-02.CABIN DOOR
/SHEET 1 OF 3 SHEETS/

ATA CODE & INDEX NO.	PART NO.	DESCRIPTION 1 2 3 4 5 6 7	UNITS PER ASSY	USABLE ON CODE
10-02	95-420012-638	DOOR ASSY,CABIN/TINTED 1/8 IN. THICK GLASS/ . .	1	1
	95-420012-640	DOOR ASSY,CABIN/TINTED 1/4 IN. THICK GLASS/ . .	1	1
	95-420012-630	DOOR ASSY,CABIN/TINTED 1/8 IN. THICK GLASS/ . .	1	2
	95-420012-632	DOOR ASSY,CABIN/TINTED 1/4 IN. THICK GLASS/ . .	1	2
		/ATTACHING PARTS/		
- 1	AN393-63	PIN	2	
		——*——		
- 2	35-400010-6	. FRAME,DOOR UPPER.	1	3
- 3	35-400320-66	. MOULDING.	1	6
	58-530083-3	. MOULDING ASSY	1	7
- 4	35-400010-14	. REINFORCEMENT,DOOR FRAME UPPER.	1	3
- 5	35-400010-69	. PANEL,DOOR INNER.	1	3
- 6	HE636	. CABLE ASSY,UPPER LATCH OPERATING.	1	3
- 7	35-400036	. SUPPORT,HANDLE SHAFT.	1	3
- 8	35-400010-28	. STIFFENER,DOOR LATCH.	1	3
- 9	35-400010-18	. REINFORCEMENT,DOOR FRAME LOWER.	1	3
- 10	35-400029-2	. REINFORCEMENT,DOOR STAY GUIDE	1	3
- 11	35-400029-4	. GUIDE,DOOR STAY	1	3
- 12	35-400010-71	. REINFORCEMENT,DOOR STAY	1	3
	35-400010-73	. DOUBLER,DOOR STAY	1	3
- 13	35-400010-66	. SKIN,DOOR	1	3
- 14	AN665-21R	. CLEVIS,LATCH TUBE	1	3
- 15	35-400320-69	. CLIP,DOOR LATCH CABLE	1	3
- 16	35-400461-4	. ADAPTER,DOOR LATCH TUBE	1	3
	35-410456-601	. LATCH ASSY,CABIN DOOR UPPER	1	3
- 17	35-410456-11	. . LINK,UPPER LATCH.	1	3
		/ATTACHING PARTS/		
- 18	AN525-10R7	. . SCREW	1	
- 19	35-410456-17	. . STUD.	1	
	AN960-10L	. . WASHER.	1	
- 20	105739X-ZR0070	. . BUSHING	1	
- 21	105739X-ZR0220	. . BUSHING	1	
	MS20365-1032	. . NUT	2	
		——*——		
- 22	35-410456-13	. . TERMINAL,UPPER LATCH CABLE.	1	3
- 23	35-410456-31	. . LINK,UPPER LATCH.	1	3
- 24	35-410456-7	. . LINK,UPPER LATCH.	1	3
		/ATTACHING PARTS/		
- 25	AN3-6A/M/	. . BOLT.	1	
- 26	100951X100YF	. . WASHER.	1	
	AN960-10	. . WASHER.	1	
- 27	105739X-ZR0110	. . BUSHING,UPPER LATCH	1	
- 28	105739X-ZR0187	. . BUSHING,UPPER LATCH	1	
- 29	35-410456-21	. . NUT	1	
- 30	35-410456-17	. . STUD.	1	
	AN960-10	. . WASHER.	1	
	MS20365-1032	. . NUT	1	
		——*——		
- 31	35-410456-3	. . BRACKET,UPPER LATCH	1	3
- 32	35-410456-5	. . LATCH,DOOR UPPER.	1	3
		/ATTACHING PARTS/		
- 33	AN525-10R9	. . SCREW	1	
- 34	105739X-ZR0168	. . BUSHING	1	
	AN960-10	. . WASHER.	1	
	MS20365-1032	. . NUT	1	
		——*——		
- 35	100942H0022-22	. . SPRING,UPPER LATCH.	1	3

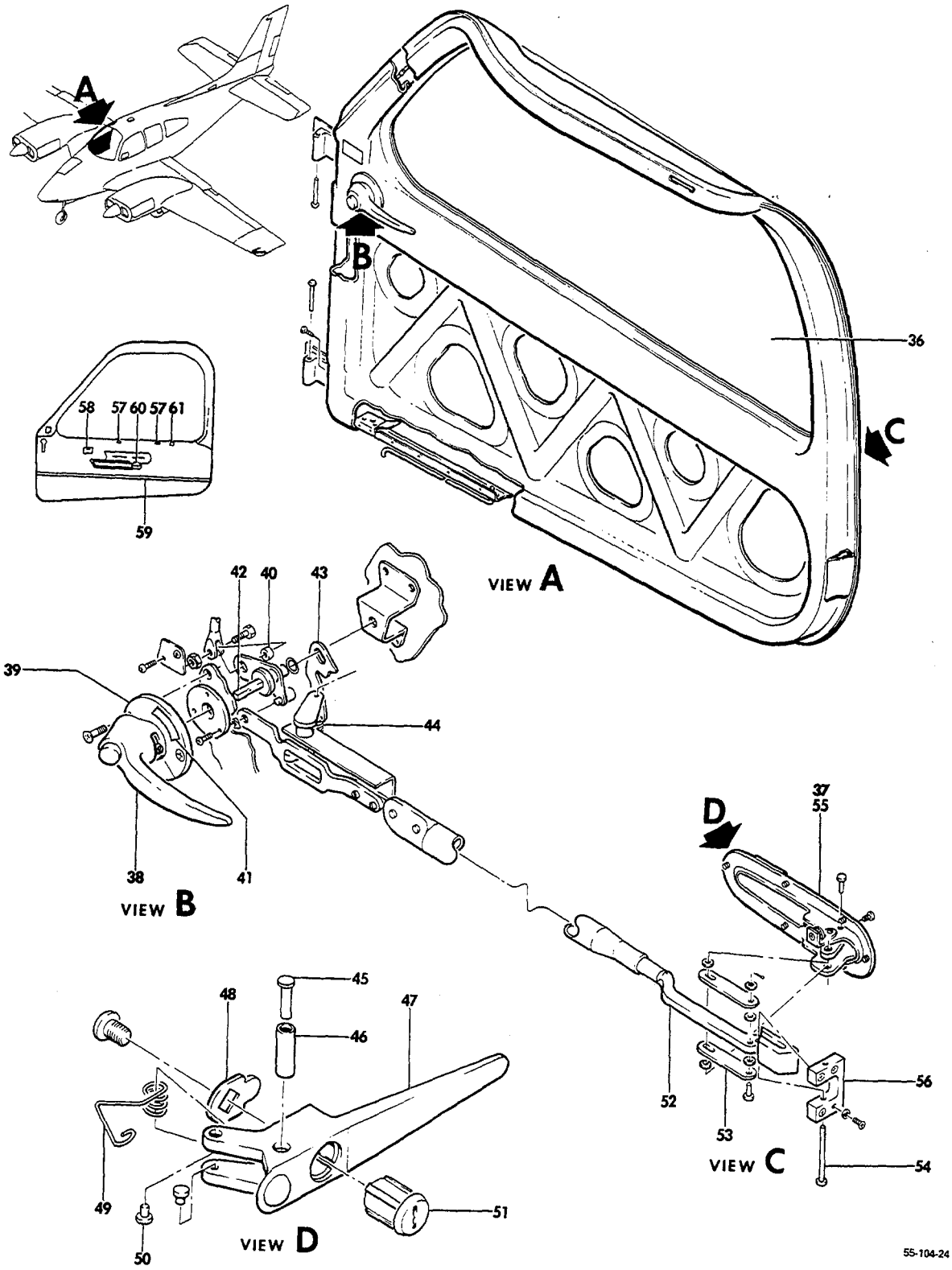

FIGURE 10-02.CABIN DOOR
/SHEET 2 OF 3 SHEETS/

ATA CODE & INDEX NO.	PART NO.	DESCRIPTION 1 2 3 4 5 6 7	UNITS PER ASSY	USABLE ON CODE
10-02 - 36	35-400320-32	. GLASS AND FRAME,ASSY/1/8 IN.GLASS/.	1	3
	95-420012-15	. GLASS AND FRAME ASSY/1/4 IN GLASS/.	1	3
- 37	35-400032-3	. SUPPORT,OUTSIDE DOOR HANDLE	1	3
- 38	95-380010	. HANDLE ASSY,INSIDE DOOR	1	3
		/ATTACHING PARTS/		
	AN507-832R18	. SCREW	1	
		----*----		
- 39	35-400395	. PLATE,INSIDE DOOR HANDLE.	1	3
	100951CR020WP	. WASHER.	1	3
- 40	102933S4ZJ0093	. SPACER,DOOR LATCH	1	3
- 41	35-400472	. PLACARD,DOOR LATCHING INSTRUCTIONS.	1	3
- 42	35-400464-8	. SHAFT ASSY, DOOR HANDLE INSIDE.	1	3
	35-400423	. . BEARING,SHAFT	1	3
- 43	35-400462	. STOP,DOOR LATCH INSIDE.	1	3
- 44	100942L0023-17	. SPRING,LATCH STOP	1	3
	35-400014-617	. HANDLE ASSY,OUTSIDE DOOR.	1	1
	35-400014-615	. HANDLE ASSY,OUTSIDE DOOR.	1	2
		/ATTACHING PARTS/		
- 45	MS20392-2-37	. PIN	1	
		----*----		
- 46	101321-00A0750	. . BUSHING	1	3
- 47	35-400013-1	. . HANDLE,INSIDE DOOR.	1	3
- 48	35-400044-1	. . CAM	1	3
- 49	35-400031-1	. . SPRING.	1	3
- 50	35-400033	. . STUD.	1	3
	35-590070-71	. . LOCK SET/CONSISTS OF CABIN DOOR PLUG, . . .	1	1
		NOSE BAGGAGE DOOR LOCK ASSY,AFT		
		BAGGAGE DOOR LOCK ASSY,BATTERY		
		SWITCH AND 2 KEYS/		
	35-590070-65	. . LOCK SET/CONSISTS OF CABIN DOOR PLUG. . . .	1	2
		NOSE BAGGAGE DOOR LOCK ASSY,AFT		
		BAGGAGE DOOR LOCK ASSY,BATTERY		
		SWITCH AND 2 KEYS/		
- 51	F6500X0	. . . PLUG,LOCK/WITH LOCK SET/.	1	3
	F65000AX2	. . . PLUG,LOCK/WITH 2 KEYS/SPARES/	1	3
	60-400011-7	. . PAWL.	1	3
- 52	35-400417	. BOLT,DOOR LATCH AFT	1	3
- 53	35-400041	. LINK,DOOR HANDLE OUTSIDE.	1	3
		/ATTACHING PARTS/		
- 54	AN392-13	. PIN	1	
	AN960-6	. WASHER.	1	
	5171	. WASHER,SPRING	AR	
	MS24665-132	. PIN,COTTER.	1	
		----*----		
- 55	35-400404-1	. SEAL,OUTSIDE HANDLE SUPPORT	1	3
- 56	35-400414	. GUIDE,DOOR LATCH.	1	3
- 57	35-400320-68	. CLIP.	8	3
- 58	96-534078-9	. BRACKET,ASH TRAY.	1	3
- 59	96-530001-77	. STRIP,DOOR TRIM	1	3
- 60	96-534100-7	. BRACKET,ARMREST	1	3
- 61	96-530002-69	. CLIP.	3	3

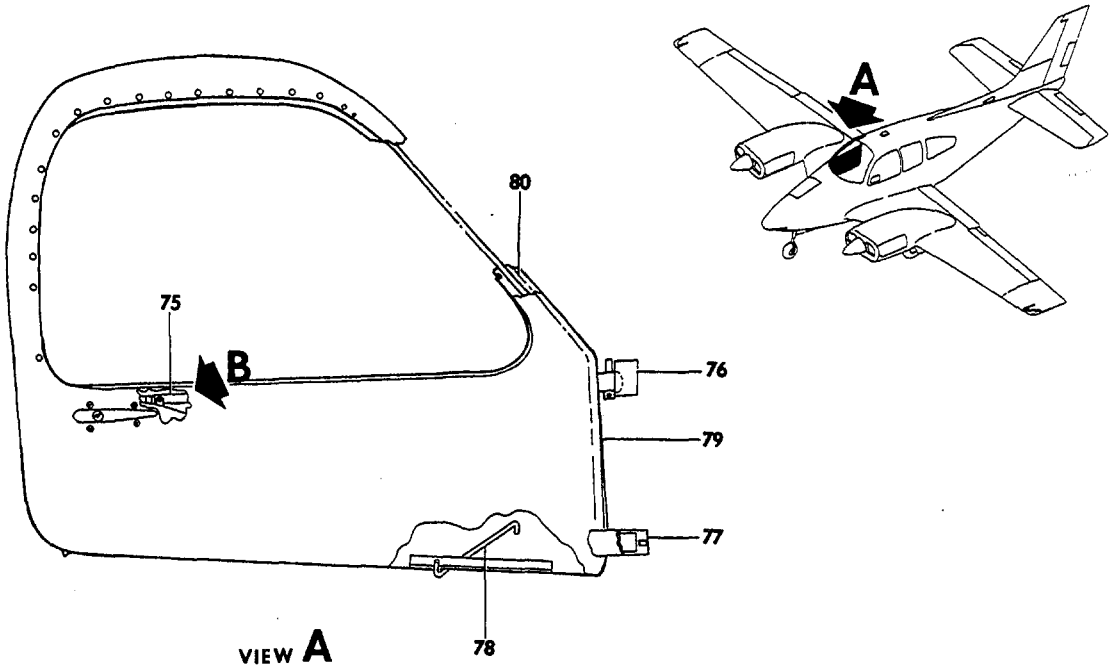

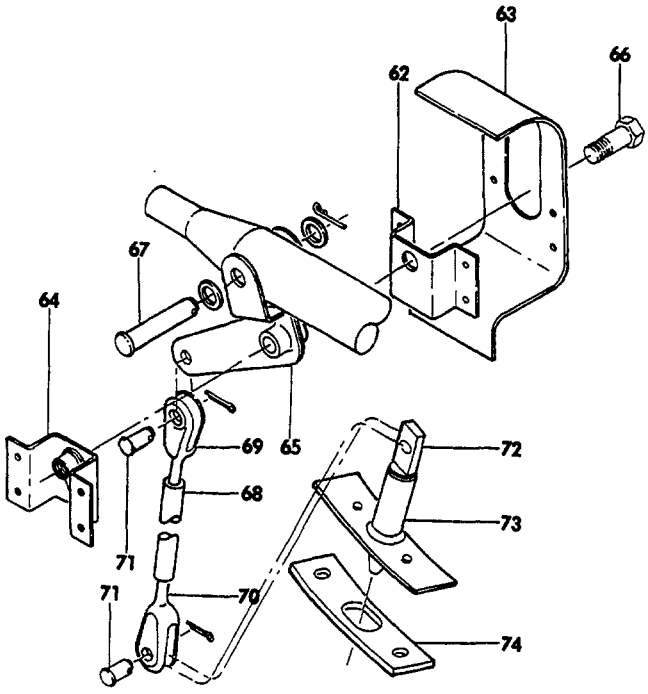

55-104-25

FIGURE 10-02.CABIN DOOR
/SHEET 3 OF 3 SHEETS/

SUB-SECT UNIT & ITEM NO.	PART NO.	DESCRIPTION 1 2 3 4 5 6 7	UNITS PER ASSY	USABLE ON CODE
10-02	96-420033-1	. LATCH POINT INSTL,THIRD CABIN DOOR.	NP	3
- 62	96-420033-23	. . BRACKET,LATCH	1	3
- 63	96-420033-27	. . BRACKET,LATCH	1	3
- 64	96-420033-25	. . BRACKET,LATCH	1	3
- 65	96-420033-15	. . BELLCRANK ASSY,LATCH.	1	3
		/ATTACHING PARTS/		
- 66	AN174-10A	. . BOLT.	1	
- 67	MS20392-3C33	. . PIN,CLEVIS.	1	
	96-420052	. . PIN,COWL LOCK	1	
	AN960-416L	. . WASHER.	2	
		----*----		
- 68	96-420033-11	. . TUBE,LATCH ACTUATING.	1	3
- 69	MS21252-3RS	. . CLEVIS,UPPER.	1	3
- 70	MS21252-3LS	. . CLEVIS,LOWER.	1	3
		/ATTACHING PARTS/		
- 71	MS20392-2C11	. . PIN,CLEVIS.	2	
	MS24665-132	. . PIN,COTTER.	2	
		----*----		
- 72	96-420033-13	. . PIN,LATCHING.	1	3
- 73	96-420033-5	. . GUIDE ASSY,PIN.	1	3
	96-420033-3	. STRIKER PLATE INSTL	1	3
- 74	96-420033-33	. . PLATE,STRIKER	1	3
		/ATTACHING PARTS/		
	AN507-832R8	. . SCREW	2	
	AN936D8	. . WASHER,LOCK	2	
		----*----		
- 75	96-420033-601	. . TUBE ASSY,DOOR LATCH.	1	3
- 76	35-410435	SEAL,CABIN DOOR UPPER HINGE	1	3
- 77	35-410436	SEAL,CABIN DOOR LOWER HINGE	1	3
- 78	95-420012-3	ROD ASSY,CABIN DOOR HOLD OPEN	1	4
	95-420012-642	ROD ASSY,CABIN DOOR HOLD OPEN	1	5
- 79	35-400320-50	SEAL,CABIN DOOR FWD	1	3
- 80	35-400320-54	SEAL,CABIN DOOR	1	3
	96-530004-199	WINDLACE,CABIN DOOR	1	3
	R 35-324459-1	HINGE,CABIN DOOR LOWER.	1	3
	35-410038-58	HINGE,UPPER AND LOWER DOOR.	2	3
	35-400445-6	HINGE,LOWER DOOR.	1	3
	35-410452-35	HINGE,LOWER DOOR.	1	3
	50-530134-1	HANDLE ASSY,STEP.	1	3
		/ATTACHING PARTS/		
	NAS387-1032-16P	SCREW	2	
		----*----		
	58-530134-03	. STRAP ASSY,ASSIST HANDLE.	1	3
	58-530134-17	. SPACER.	2	3
	58-530134-9	. CAP	2	3

CODES OF EFFECTIVITY

1 TC-1143 THRU TC-1607 2 TE-768 THRU TE-942
EXCEPT TE-938
3 TC-1143 THRU TC-1607 4 TC-1143 THRU TC-1552
TE-767 THRU TE-942 TE-768 THRU TE-914
EXCEPT TE-938
5 TC-1553 THRU TC-1607 6 TC-1143 THRU TC-1402
TE-915 THRU TE-942 TE-768 THRU TE-846
EXCEPT TE-938
7 TC-1403 THRU TC-1607
TE-847 THRU TE-942
EXCEPT TE-938

52-20-01
EMERGENCY EXIT

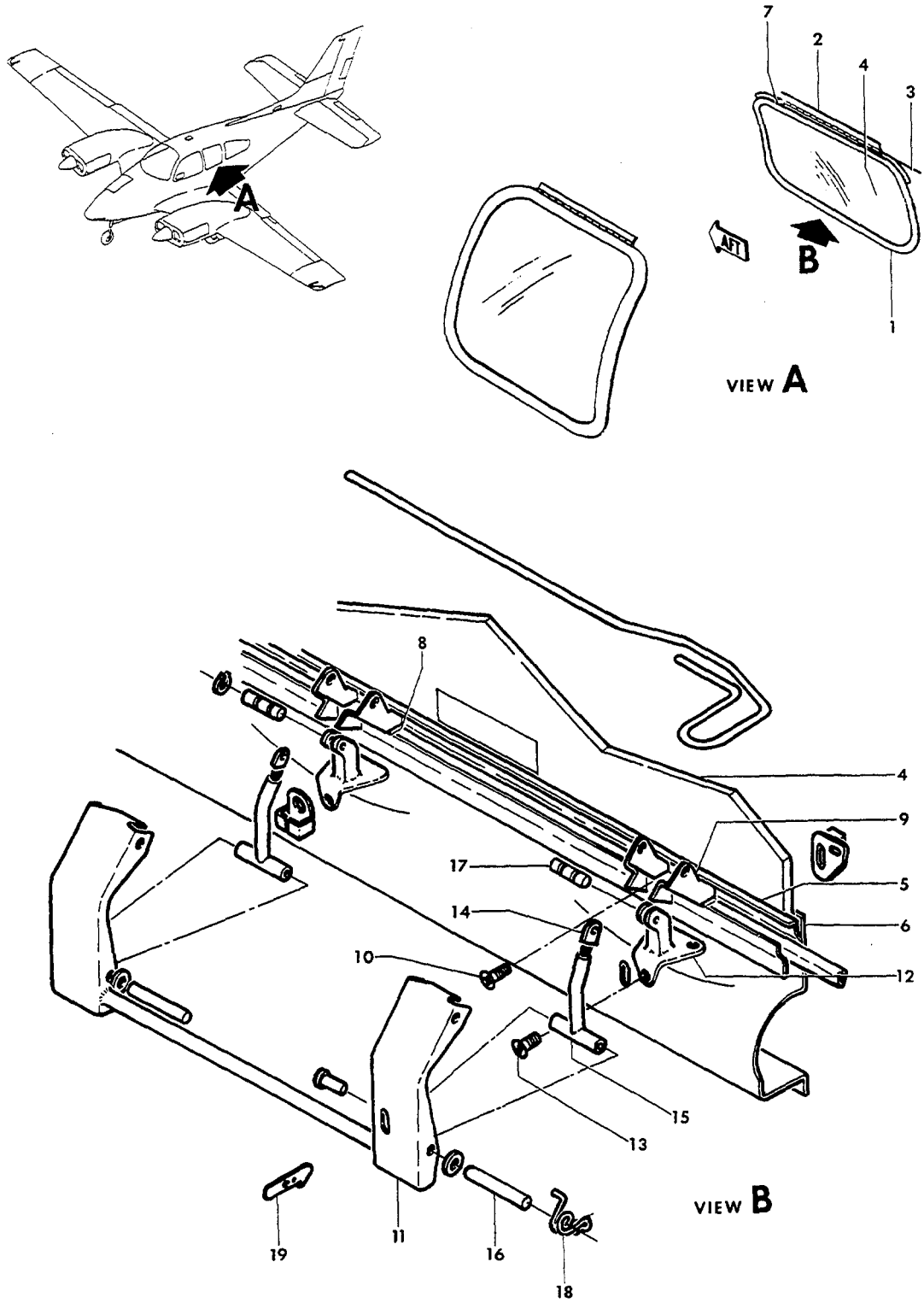

FIGURE 20-01.EMERGENCY EXIT
/SHEET 1 OF 2 SHEETS/

ATA CODE & INDEX NO.	PART NO.	DESCRIPTION 1 2 3 4 5 6 7	UNITS PER ASSY	USABLE ON CODE
20-01 - 1	35-410291-146	WINDOW ASSY,CABIN REAR LH/STANDARD GLASS/ . . .	1	1
	35-410291-147	WINDOW ASSY,CABIN REAR RH/STANDARD GLASS/ . . .	1	1
	96-420011-11	WINDOW ASSY,CABIN REAR LH/THICK GLASS/.	1	1
	96-420011-12	WINDOW ASSY,CABIN REAR RH/THICK GLASS/.	1	1
		/ATTACHING PARTS/		
- 2	35-410291-98	HINGE,WINDOW CABIN HALF	1	
- 3	35-410291-52	PIN,WINDOW HINGE.	1	
		----*----		
- 4	35-410291-130	. WINDOW,LH/STANDARD GLASS/	1	1
	35-410291-131	. WINDOW,RH/STANDARD GLASS/	1	1
	96-420011-1	. WINDOW LH/THICK GLASS/.	1	1
	96-420011-2	. WINDOW RH/THICK GLASS/.	1	1
- 5	35-410291-144	. FRAME,LH WINDOW INSIDE.	1	1
	35-410291-145	. FRAME,RH WINDOW INSIDE.	1	1
- 6	35-410291-16	. FRAME,LH WINDOW OUTSIDE	1	1
	35-410291-17	. FRAME,RH WINDOW OUTSIDE	1	1
- 7	35-410291-18	. HINGE,WINDOW HALF/LH & RH/.	1	1
- 8	35-410291-106	. SPACER,WINDOW/LH & RH/.	2	1
- 9	35-400298	. SUPPORT,WINDOW LATCH MECHANISM.	2	1
		/ATTACHING PARTS/		
- 10	MS24693S51	. SCREW	2	
	MS20364-832	. NUT	2	
		----*----		
	35-410291-631	LATCH ASSY,REAR WINDOW LH	1	2
	35-410291-641	LATCH ASSY,REAR WINDOW LH	1	3
	35-410291-632	LATCH ASSY,REAR WINDOW RH	1	2
	35-410291-642	LATCH ASSY,REAR WINDOW RH	1	3
- 11	35-415312-3	. HANDLE ASSY,LH.	1	1
	35-415312-4	. HANDLE ASSY,RH.	1	1
- 12	35-534061	. SUPPORT,WINDOW LATCH MECHANISM.	2	1
		/ATTACHING PARTS/		
- 13	AN507-8R9	. SCREW	2	
	AN525-10R10	. SCREW	1	
		----*----		
- 14	35-534064	. LINK,CABIN WINDOW ADJUSTING	2	1
- 15	35-534057-8	. LINK ASSY,CABIN WINDOW INNER.	2	1
- 16	35-534063	. PIN,CABIN WINDOW MECHANISM.	2	1
- 17	35-410317	. PIN,CABIN WINDOW CATCH.	2	1
	NAS51-18N	. RING.	4	1
- 18	35-415310-1	. SPRING,WINDOW LATCH LH.	1	1
	35-415310-2	. SPRING,WINDOW LATCH RH.	1	1
- 19	35-415311-1	. LATCH,CABIN WINDOW.	1	2
	58-420057-3	. LATCH,CABIN WINDOW.	1	3

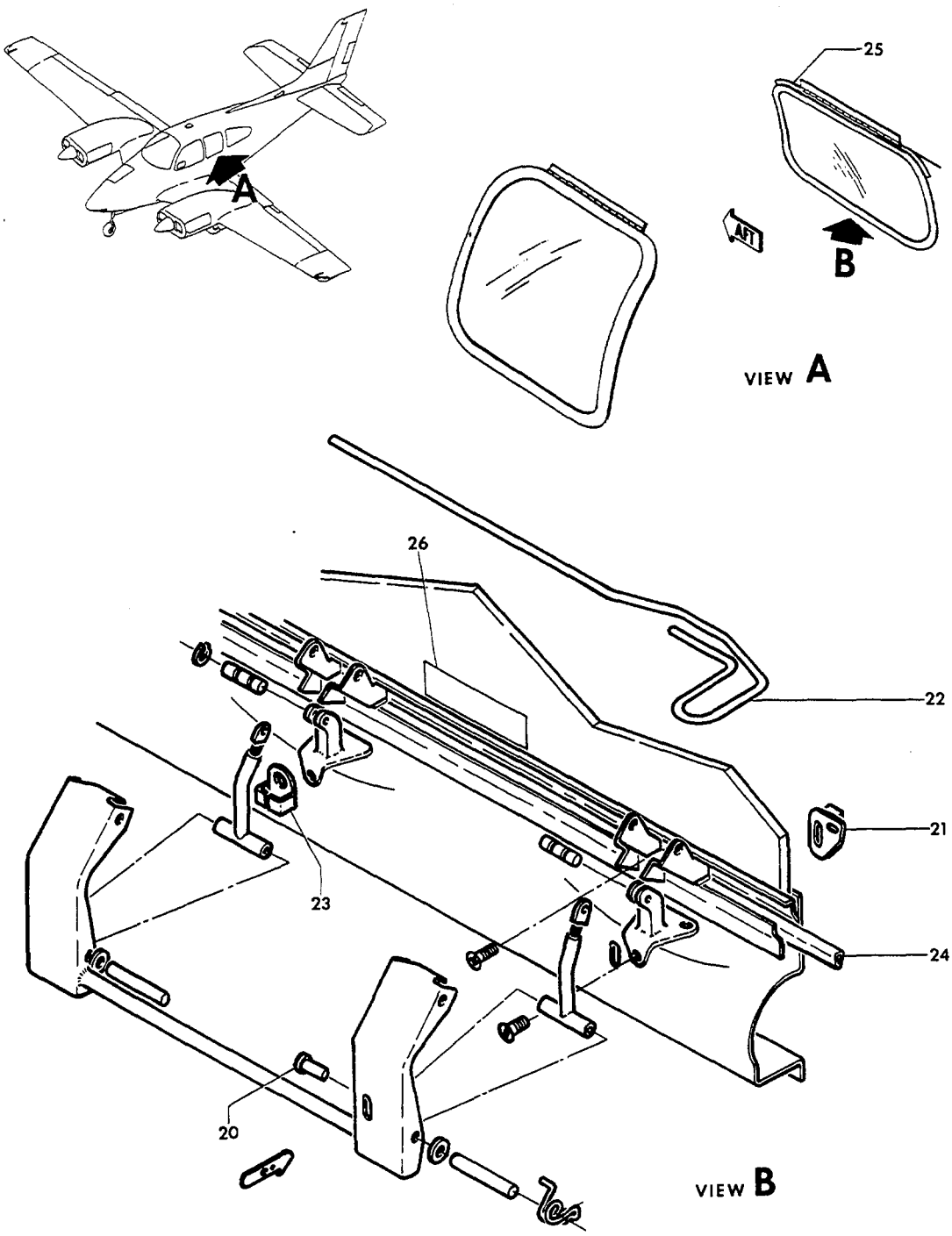

55-108-3

FIGURE 20-01.EMERGENCY EXIT
/SHEET 2 OF 2 SHEETS/

SUB-SECT UNIT & ITEM NO.	PART NO.	DESCRIPTION 1 2 3 4 5 6 7	UNITS PER ASSY	USABLE ON CODE
20-01 - 20	AN392-15	. PIN,LATCH	1	1
	MS24665-130	. PIN,COTTER/SUPERSEDES AN380-2-2/.	1	1
	MS24665-132	. PIN,COTTER/SUPERSEDES AN380-2-1/.	2	1
- 21	35-415309-1	CATCH ASSY,CABIN WINDOW LH.	1	1
	35-415309-2	CATCH ASSY,CABIN WINDOW RH.	1	1
- 22	35-410316	PIN,CABIN WINDOW RELEASE LH	1	1
	35-410316-1	PIN,CABIN WINDOW RELEASE RH	1	1
- 23	35-410323	CLIP,CABIN WINDOW MECHANISM RETAINER.	2	1
	35-410291-72	MOULDING,CABIN CENTER LH/SEE CHAPTER 25/. . . .	1	5
	58-530087-3	MOULDING ASSY,CANOPY POST LH CENTER/SEE CHAP 25	1	6
	35-410291-73	MOULDING,CABIN CENTER RH/SEE CHAPTER 25/. . . .	1	5
	58-530088-3	MOULDING ASSY,CANOPY POST RH CENTER/SEE CHAP 25	1	6
- 24	35-410291-245	SEAL,CABIN WINDOW	2	1
		/SUPERSEDES 35-410291-181 & -239/		
- 25	35-410291-102	SHIM.	2	1
	35-410291-114	SHIM.	2	1
- 26	35-410329 W-C	PLACARD,CABIN WINDOW/SEE CHAPTER 11-30-01/. . .	2	1
	35-410329 B-C	PLACARD,CABIN WINDOW/SEE CHAPTER 11-30-01/. . .	2	1
		SEE BEECHCRAFT S. I. 1241		
	35-534352-3	PLACARD,CABIN WINDOW/SEE CHAPTER 11-30-01/. . .	2	4

CODES OF EFFECTIVITY

1	TC-1 THRU TC-1607 TE-1 THRU TE-942 EXCEPT TE-938	2	TC-1 THRU TC-1516 TE-1 THRU TE-898
3	TC-1517 THRU TC-1607 TE-899 THRU TE-942 EXCEPT TE-938	4	TC-191 THRU TC-1607 TE-1 THRU TE-942 EXCEPT TE-938
5	TC-1 THRU TC-1402 TE-1 THRU TE-846	6	TC-1403 THRU TC-1607 TE-847 THRU TE-942 EXCEPT TE-938

"END"

52-30-01
CABIN BAGGAGE DOOR

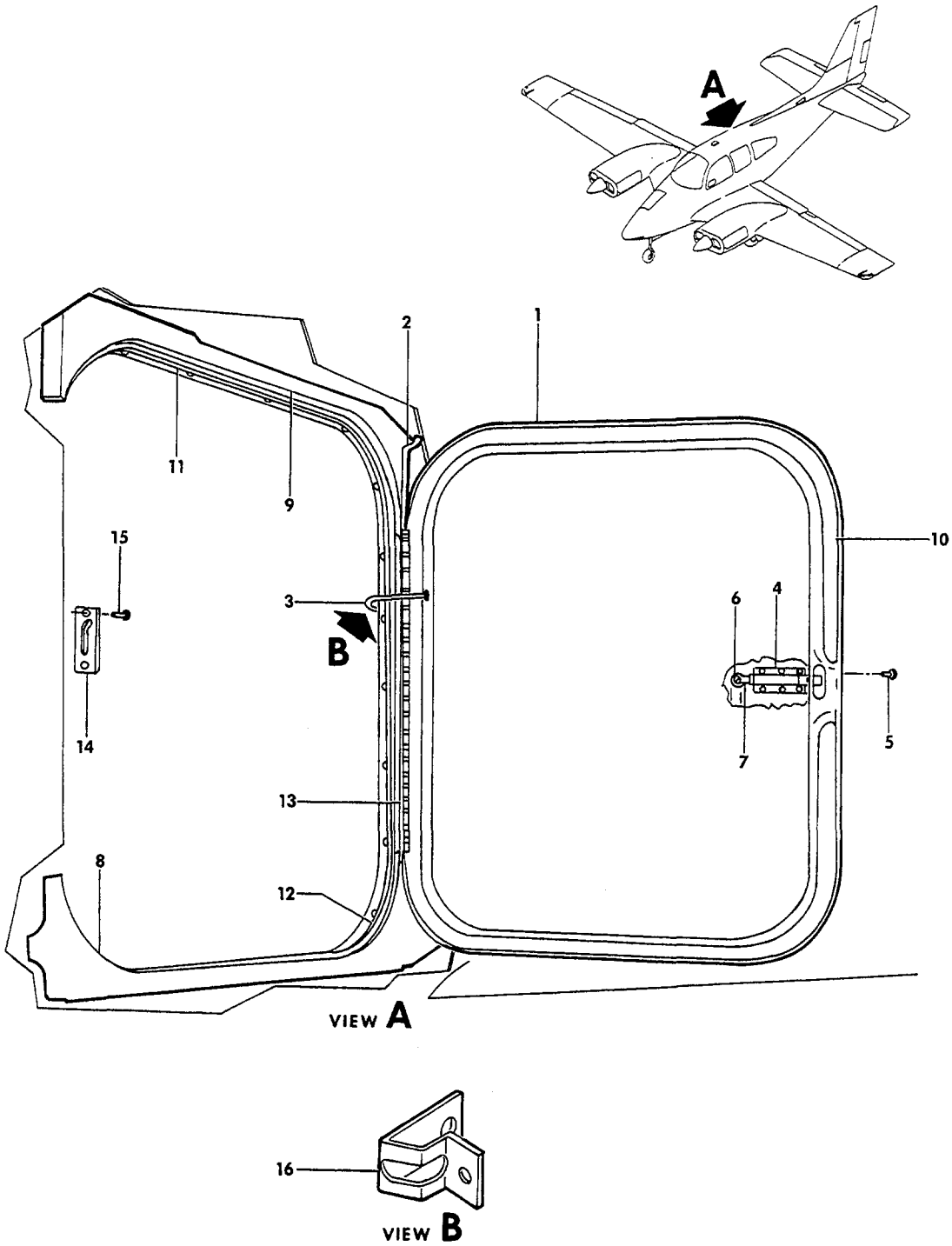

FIGURE 30-01.CABIN BAGGAGE DOOR

ATA CODE & INDEX NO.	PART NO.	DESCRIPTION 1 2 3 4 5 6 7	UNITS PER ASSY	USABLE ON CODE
30-01	35-410070-81	DOOR INSTALLATION,CABIN BAGGAGE	NP	1
	35-410070-101	DOOR INSTALLATION,CABIN BAGGAGE	NP	2
	35-410070-606	. DOOR ASSEMBLY,CABIN BAGGAGE	1	3
	35-410070-608	. DOOR ASSEMBLY,CABIN BAGGAGE	1	4
	35-410070-93	. DOOR ASSEMBLY,CABIN BAGGAGE	1	5
- 1	35-410070-99	. DOOR ASSEMBLY,CABIN BAGGAGE	1	2
		/ATTACHING PARTS/		
- 2	35-410070-79	. PIN,HINGE	1	
		----*----		
	35-410070-10	. . HINGE,BAGGAGE DOOR HALF	1	
- 3	35-410214-5	. . STOP,BAGGAGE DOOR	1	
	35-410070-54	. . DOUBLER,DOOR STOP	1	
	35-410070-56	. . DOUBLER,DOOR STOP	1	
- 4	35-415416	. . LATCH,BAGGAGE DOOR.	1	
		/ATTACHING PARTS/		
- 5	AN507-632	. . SCREW	6	
		----*----		
	35-410070-85	. . DOUBLER,DOOR LATCH.	1	
	35-410070-87	. . PAN,BAGGAGE DOOR.	1	
	35-410070-89	. . SKIN,BAGGAGE DOOR	1	
	35-410070-91	. . SPONGE,RUBBER	1	
	35-410070-97	. . SEAL,DOOR TITE.	1	
- 6	35-590099-29	. . LOCK ASSY,BAGGAGE DOOR/SPARES REPLACEMENT	1	
		FOR 35-590070-9 OR 35-590070-23/		
- 7	35-590099-35	. . CAM	1	
	35-410070-12	. HINGE,FUSELAGE HALF	1	
- 8	35-410070-18	. CHANNEL ASSY,LOWER.	1	
- 9	95-420015-153	. CHANNEL ASSY,UPPER.	1	
	96-430011-27	SEAL INSTL,BAGGAGE DOOR	NP	
- 10	96-430011-17	. SEAL,BAGGAGE DOOR	1	
- 11	96-430011-25	. SEAL,BAGGAGE DOOR UPPER	1	
- 12	96-430011-23	. SEAL,BAGGAGE DOOR LOWER	1	
- 13	96-430011-21	. STRIP,PHENOLIC.	1	
- 14	96-430011-29	. PLATE,STRIKER	1	
		/ATTACHING PARTS/		
- 15	AN526-10R	. SCREW	2	
		----*----		
- 16	35-410180-14	LATCH,BAGGAGE DOOR STOP	1	
	96-530007-99	WINDLACE,BAGGAGE DOOR/STANDARD/	1	

CODES OF EFFECTIVITY

1 TC-1 THRU TC-1607 EXCEPT TC-350
2 TE-1 THRU TE-942 EXCEPT TE-938
3 TC-1 THRU TC-501 EXCEPT TC-350
4 TC-502 THRU TC-587
5 TC-588 THRU TC-1607

"END"

52-32-01
UTILITY BAGGAGE DOOR

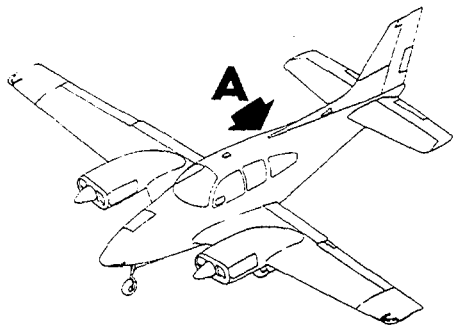

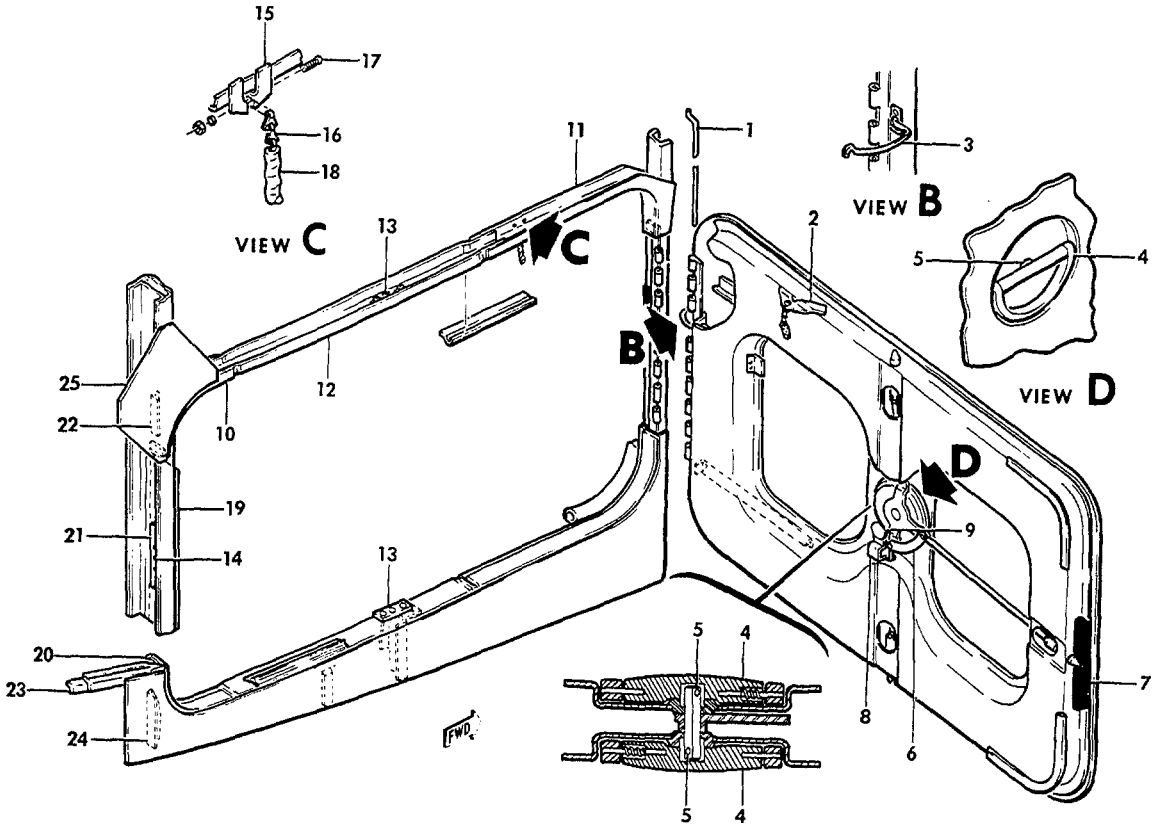

B55-106-5

FIGURE 32-01.UTILITY BAGGAGE DOOR
SHEET 1 OF 2 SHEETS

SUB-SECT UNIT & ITEM NO.	PART NO.	DESCRIPTION 1 2 3 4 5 6 7	UNITS PER ASSY	USABLE ON CODE
32-01	96-420016-165	DOOR ASSEMBLY,UTILITY BAGGAGE	1	1
	96-420016-169	DOOR ASSEMBLY,UTILITY BAGGAGE	1	2
	96-420016-601	DOOR ASSEMBLY,UTILITY BAGGAGE	1	3
		/ATTACHING PARTS/		
- 1	35-410070-14	PIN,HINGE	1	
		----*----		
	96-420016-53	. SKIN,DOOR	1	1
	96-420016-173	. SKIN,DOOR	1	2
	96-420016-205	. SKIN,DOOR	1	3
	96-420016-125	. PAN,DOOR.	1	
- 2	96-420016-105	. CLIP,DOOR STOP CHAIN.	1	
- 3	35-410214-5	. STOP ASSY,BAGGAGE DOOR.	1	
	3006	. BOLT ASSY,AFT BAGGAGE DOOR.	1	1
	3003	. BOLT ASSY,AFT BAGGAGE DOOR.	1	4
- 4	R DY1499	. . HANDLE ASSY,AFT BAGGAGE DOOR/UTILITY/	1	4
	R DY1440	. . HANDLE ASSY,AFT BAGGAGE DOOR/UTILITY/	1	1
- 5	79-032-156-0562	. . PIN,ROLL/HANDLE ATTACH/	1	
	AN936A516	. WASHER/INSTALL UNDER BELLCRANK NUT/	1	
- 6	96-420016-159	. STRIKER,AFT BAGGAGE DOOR.	1	
	96-420016-97	. HINGE,HALF/BAGGAGE DOOR STOP/	1	
	96-420016-54	. DOUBLER,DOOR STOP	1	
	96-420016-56	. DOUBLER,DOOR STOP	1	
	96-420016-163	. ANGLE,LOWER BAGGAGE DOOR.	1	
	96-420016-164	. ANGLE,UPPER BAGGAGE DOOR.	1	
	96-420016-605	. SOUND PROOFING.	1	3
	96-420016-195	. SUPPORT,AFT BAGGAGE DOOR.	1	2
- 7	96-420016-59	SEAL,AFT BAGGAGE DOOR	1	
	96-420016-135	LOCK ASSY,AFT BAGGAGE DOOR.	1	
- 8	96-420016-161	. CAM,AFT BAGGAGE DOOR.	1	
- 9	FL608EX2	. PLUG.	1	
- 10	96-420016-71	CORNER ASSY,AFT UPPER SILL.	1	
- 11	96-420016-73	CORNER ASSY,FWD UPPER SILL.	1	
	96-420016-75	FILLER,UPPER FWD CORNER	1	
- 12	96-420016-21	CHANNEL,UPPER SILL.	1	
- 13	96-420016-29	STRIKER BLOCK,UPPER AND LOWER	2	
- 14	96-420016-217	STRIKER BLOCK,AFT DOOR.	1	
		/ATTACHING PARTS/		
	MS27039-1-12	SCREW	3	
	NAS1329A3K80	NUTPLATE.	3	
		----*----		
- 15	96-420016-103	CLIP,DOOR STOP CHAIN FWD.	1	
	96-420016-104	CLIP,DOOR STOP CHAIN AFT.	1	
- 16	NAS1455C8-16C	CHAIN,DOOR STOP	1	
		/ATTACHING PARTS/		
- 17	AN515-8R10	SCREW	2	
	MS20365-832	NUT	2	
		----*----		
- 18	106242-5-01550	TUBING,CHAIN COVER.	1	
- 19	96-420016-25	FILLER,AFT BAGGAGE DOOR FRAME	1	
- 20	96-420016-11	FILLER,BLOCK.	2	
- 21	96-420016-101	DOUBLER,DOOR LATCH AFT.	1	
- 22	35-410160-32	ANGLE,UPPER AFT	1	
- 23	96-420016-95	ANGLE,LOWER AFT	1	
- 24	96-420016-27	ANGLE,LOWER AFT	1	
- 25	96-420016-1	DOUBLER,UPPER AFT CORNER.	1	

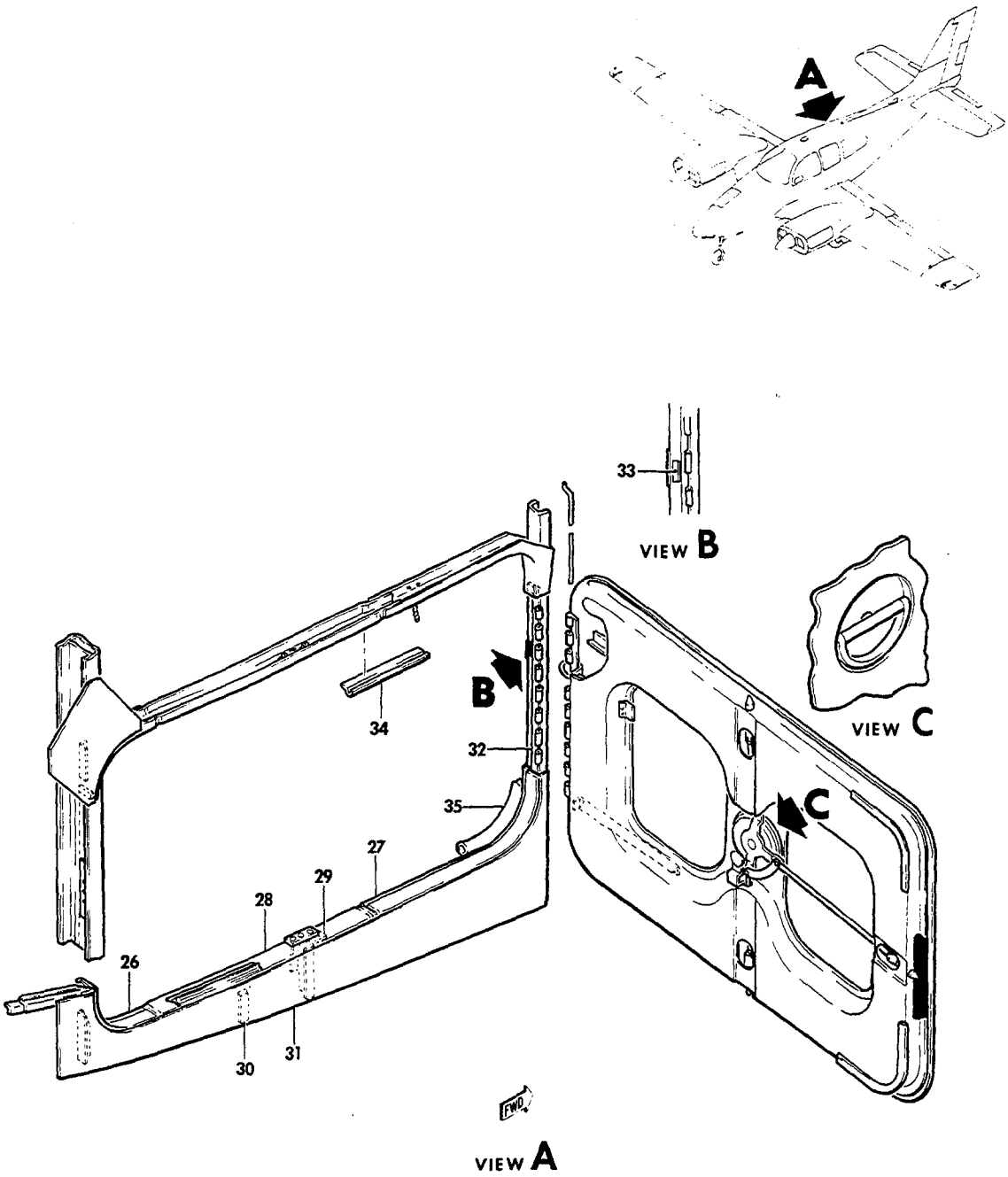

FIGURE 32-01. UTILITY BAGGAGE DOOR
SHEET 2 OF 2 SHEETS

SUB-SECT UNIT & ITEM NO.	PART NO.	DESCRIPTION 1 2 3 4 5 6 7	UNITS PER ASSY	USABLE ON CODE
32-01 - 26	96-420016-15	CORNER ASSY,LOWER AFT SILL.	1	
- 27	96-420016-9	CORNER ASSY,LOWER FWD SILL.	1	
- 28	96-420016-5	CHANNEL,LOWER SILL.	1	
- 29	96-420016-17	CLIP,DOOR FRAME	1	
- 30	96-420016-13	STIFFENER,LOWER DOOR SILL	1	
- 31	96-420016-177	DOUBLER,LOWER AFT BAGGAGE DOOR.	1	
- 32	96-420016-99	HINGE,FUSELAGE HALF	1	
- 33	35-410160-14	REINFORCEMENT,DOOR STOP	1	
- 34	96-420016-55	STRIP,SEAL UPPER.	1	
	96-420016-57	STRIP,SEAL LOWER.	1	
		/ATTACHING PARTS/		
	PK65A4-6	SCREW	27	
	PK76-2-6	SCREW	27	
		——*——		
- 35	96-530007-115	WINDLACE,AFT BAGGAGE DOOR	1	

CODES OF EFFECTIVITY

1 TC-1 THRU TC-1289
TE-1 THRU TE-767

2 TC-1290 THRU TC-1607

3 TE-768 THRU TE-942
EXCEPT TE-938

4 TC-1290 THRU TC-1607
TE-768 THRU TE-942
EXCEPT TE-938

52-35-01
NOSE BAGGAGE DOOR
TC-1 THRU TC-1607;TE-1 THRU TE-451

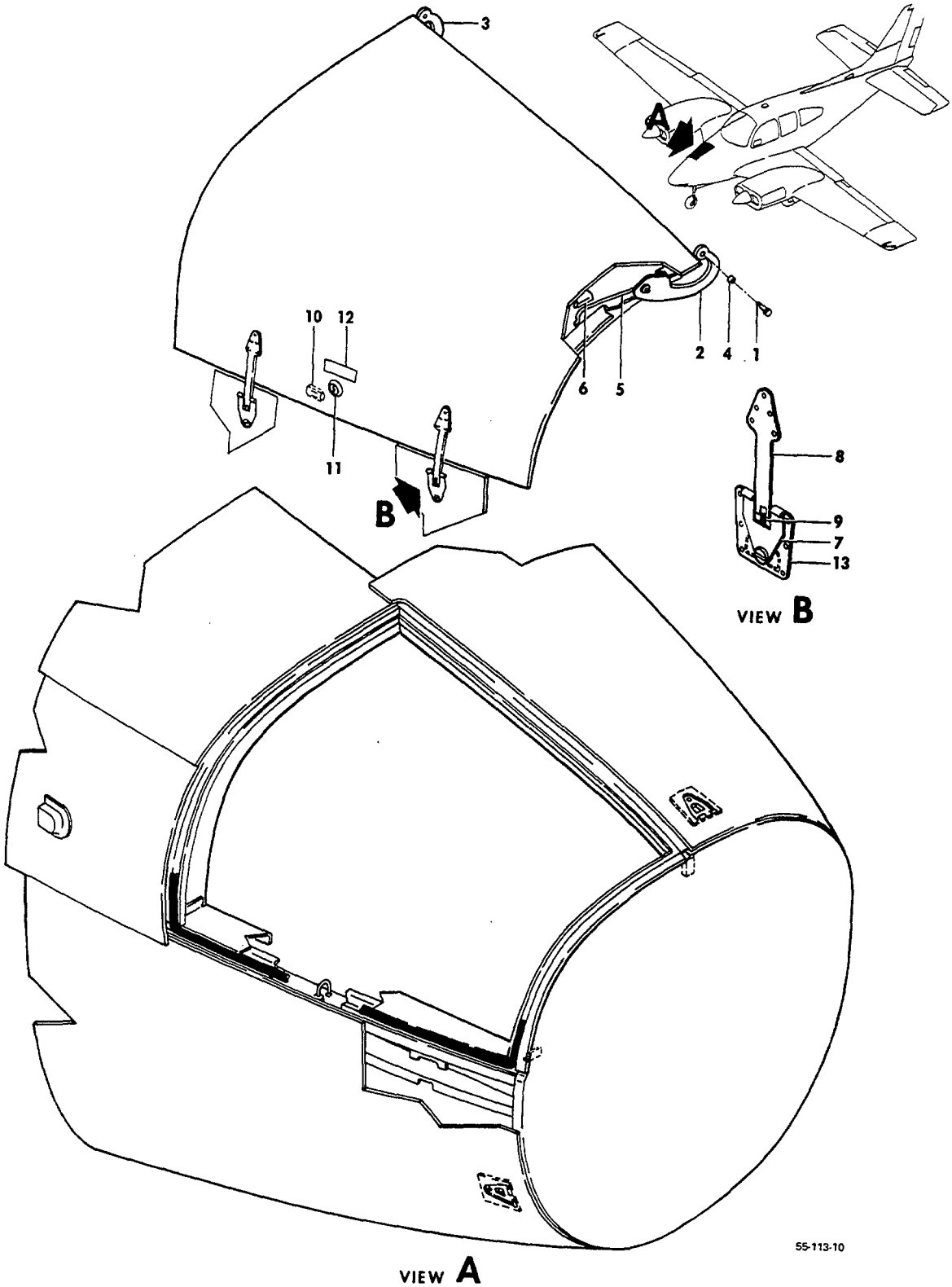

FIGURE 35-01.NOSE BAGGAGE DOOR

SUB-SECT UNIT & ITEM NO.	PART NO.	DESCRIPTION 1 2 3 4 5 6 7	UNITS PER ASSY	USABLE ON CODE
35-01	95-410029	DOOR INSTALLATION,NOSE BAGGAGE.	NP	1
	95-410029-37	DOOR INSTALLATION,NOSE BAGGAGE.	NP	2
	95-410029-602	. DOOR ASSY,NOSE BAGGAGE.	1	1
	95-410029-612	. DOOR ASSY,NOSE BAGGAGE.	1	2
		/ATTACHING PARTS/		
- 1	AN4A/M/	. BOLT.	2	
	105739X-XC0219	. BUSHING	2	
	AN960-416L	. WASHER.	2	
	MS20365-428	. NUT	2	
		----*----		
	95-410029-601	. . WELD ASSY,BAGGAGE DOOR.	1	1
	95-410029-611	. . WELD ASSY,BAGGAGE DOOR.	1	2
	002-410055-37	. . HINGE ASSY,FWD.	1	1
	95-410029-51	. . HINGE ASSY,FWD.	1	2
	95-410029-29	. . HINGE ASSY,AFT.	1	1
	002-410055-39	. . HINGE ASSY,AFT.	1	2
- 2	002-410055-41	. . . HINGE,FWD	1	3
- 3	002-410055-41	. . . HINGE,AFT	1	1
	002-410055-43	. . . HINGE,AFT	1	2
		/ATTACHING PARTS/		
	AN3A	. . . BOLT.	3	
	AN509-10-11	. . . SCREW	3	
	AN960-10L	. . . WASHER.	3	
	MS20365-1032	. . . NUT	3	
		----*----		
	95-410029-31	. . . STOP,DOOR TRAVEL.	1	1
	002-410055-45	. . . STOP,DOOR TRAVEL.	1	2
- 4	101321-2G0188	. . . BUSHING,PRESS FIT	2	3
- 5	95-410029-25	. . STOP,DOOR HOLD OPEN	1	1
	002-410055-35	. . STOP,DOOR HOLD OPEN	1	2
		/ATTACHING PARTS/		
	AN960-416L	. . WASHER.	2	
	MS24665-5	. . PIN,COTTER.	2	
		----*----		
- 6	185678	. . CLIP,STOP STOWAGE	1	3
		/ATTACHING PARTS/		
	AN515-4	. . SCREW	1	
	AN936B4	. . WASHER.	1	
	AN340-4	. . NUT	1	
		----*----		
- 7	414-184040-1	. . BRAZE ASSY,NOSE BAGGAGE DOOR LEVER.	2	3
- 8	414-184040-7	. . STRAP,NOSE BAGGAGE DOOR LATCH	2	3
	W98292-2-170	. . STUD,BAGGAGE DOOR LATCH	2	3
	99836	. . PIN,STUD CROSS.	2	3
	414-184040-19	. . BOLT ASSY,T	2	3
- 9	414-184040-21	. . . BOLT,T.	2	3
	414-184040-17	. . . PIN,NOSE BAGGAGE DOOR LATCH	2	3
- 10	185676	. . CLIP,LOCK CAM	1	3
	95-410029-27	. . BRACKET,LOCK MOUNTING	1	3
- 11	F6747RX2	LOCK,NOSE BAGGAGE DOOR/SUPERSEDES F6747R/ . . .	1	3
	47	. CAM,NOSE BAGGAGE DOOR LOCK.	1	3
- 12	95-410036	PLACARD	1	3
- 13	414-184040-9	PLATE,NOSE BAGGAGE DOOR LATCH	2	3
	99947P130	RECEPTACLE,NOSE BAGGAGE DOOR LATCH.	2	3
	295718	COVER,LATCH RECEPTACLE.	2	3
	R 95-410006-117	SEAL,NOSE BAGGAGE DOOR.	1	4

CODES OF EFFECTIVITY

1	TC-1 THRU TC-537	2	TC-538 THRU TC-1607 TE-1 THRU TE-451
3	TC-1 THRU TC-1607 TE-1 THRU TE-451	4	TE-1 THRU TE-451

52-35-02
NOSE BAGGAGE DOOR
TC-1043 THRU TC-1607
TE-452 THRU TE-942 EXCEPT TE-938

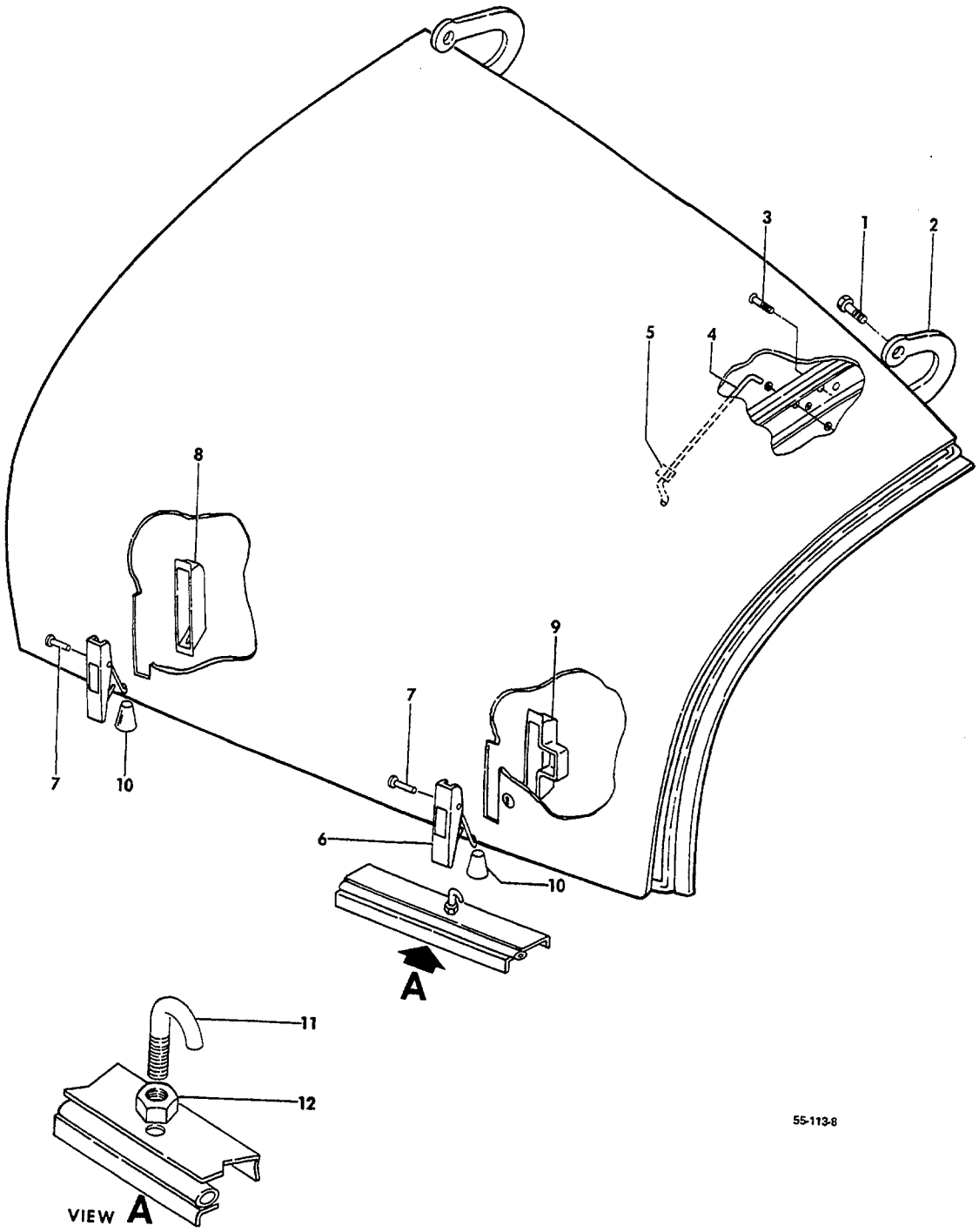

FIGURE 35-02.NOSE BAGGAGE DOOR
/SHEET 1 OF 2 SHEETS/

SUB-SECT UNIT & ITEM NO.	PART NO.	DESCRIPTION 1 2 3 4 5 6 7	UNITS PER ASSY	USABLE ON CODE
35-02	95-410029-55	DOOR INSTALLATION,NOSE BAGGAGE.	NP	1
	R 95-410029-616	. DOOR ASSY,NOSE BAGGAGE.	1	1
		/ATTACHING PARTS/		
- 1	AN4A/M/	. BOLT.	2	
	105739X-XC0219	. BUSHING	2	
	AN960-416L	. WASHER.	2	
	MS20365-428	. NUT	2	
		—*—		
	R 002-410055-3	. . WELD ASSY,BAGGAGE DOOR.	1	1
	95-410029-51	. . HINGE ASSY,FWD.	1	1
	002-410055-39	. . HINGE ASSY,AFT.	1	1
- 2	002-410055-41	. . . HINGE,FWD	1	1
	002-410055-43	. . . HINGE,AFT	1	1
		/ATTACHING PARTS/		
- 3	AN509-10-11	. . . SCREW	3	
	AN960-10L	. . . WASHER.	3	
	MS20365-1032	. . . NUT	3	
		—*—		
	101321-2G0188	. . . BUSHING,PRESS FIT	2	1
	002-410055-45	. . . STOP,DOOR TRAVEL.	1	1
- 4	002-410055-35	. . STOP,DOOR HOLD OPEN	1	1
		/ATTACHING PARTS/		
	AN960-416L	. . WASHER.	2	
	MS24665-5	. . PIN,COTTER.	2	
		—*—		
- 5	185678	. . CLIP,STOP STOWAGE	1	1
		/ATTACHING PARTS/		
	AN515-4	. . SCREW	1	
	AN93684	. . WASHER.	1	
	AN340-4	. . NUT	1	
		—*—		
	95-410029-71	. . COVER ASSY,LATCH/FWD/	1	1
	95-410029-69	. . COVER ASSY,LATCH/AFT/	1	1
- 6	60-384013-5	. . . LATCH,FWD	1	1
	60-384013-7	. . . LATCH,AFT	1	1
		/ATTACHING PARTS/		
- 7	MS20392-2C39	. . . PIN	2	
	AN960-10L	. . . WASHER.	2	
	MS20392-1C39	. . . PIN	2	
	AN960-4	. . . WASHER.	2	
	MS24665-151	. . . PIN,COTTER.	4	
		—*—		
- 8	60-410052-1	. . . COVER,AFT	1	1
- 9	95-410029-81	. . . COVER,FWD	1	1
- 10	95-410029-67	. . . BOOT.	2	1
- 11	95-410006-115	HOOK.	2	2
	95-410006-139	RETAINER ASSY,BAGGAGE DOOR LATCH.	2	3
		/ATTACHING PARTS/		
- 12	AN316-4R	NUT,CHECK	2	
	AN935-416	WASHER,LOCK	2	
	NAS1029N4	NUTPLATE.	2	
	AN525-10R9	SCREW	4	
	AN960-10	WASHER.	4	
	MS20365-1032	NUT	4	
		—*—		

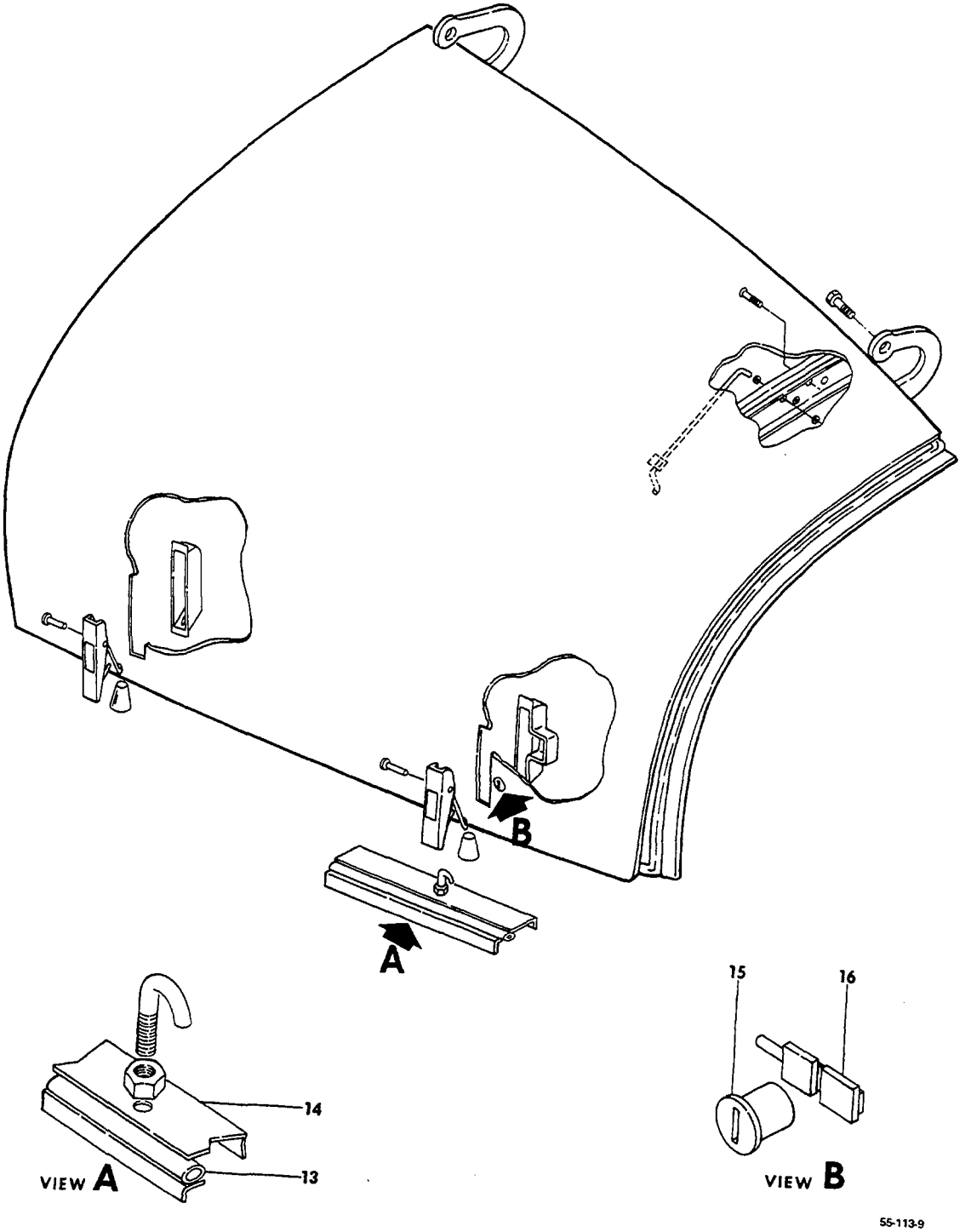

FIGURE 35-02.NOSE BAGGAGE DOOR
/SHEET 2 OF 2 SHEETS/

SUB-SECT UNIT & ITEM NO.	PART NO.	DESCRIPTION 1 2 3 4 5 6 7	UNITS PER ASSY	USABLE ON CODE
35-02 - 13	95-410006-117	SEAL ASSY	1	1
	95-410006-119	. SEAL,LOWER SIDE	1	1
	95-410006-121	. SEAL,AFT SIDE	1	1
	95-410006-123	. SEAL,UPPER SIDE	1	1
	95-410006-125	. SEAL,FWD SIDE	1	1
	96-304007	. SEAL,CORNER	4	1
- 14	95-410006-113	LEDGE,DOOR.	1	2
	95-410006-143	LEDGE,DOOR.	1	3
- 15	R 35-590070-65	LOCK KIT.	1	1
	9899	. PLUG.	1	1
- 16	60-400011-7	. PAWL.	1	1

CODES OF EFFECTIVITY

1 TE-452 THRU TE-942 EXCEPT TE-938
2 TE-452 THRU TE-557
3 TE-558 THRU TE-942 EXCEPT TE-938

52-60-01
ASSIST STEP

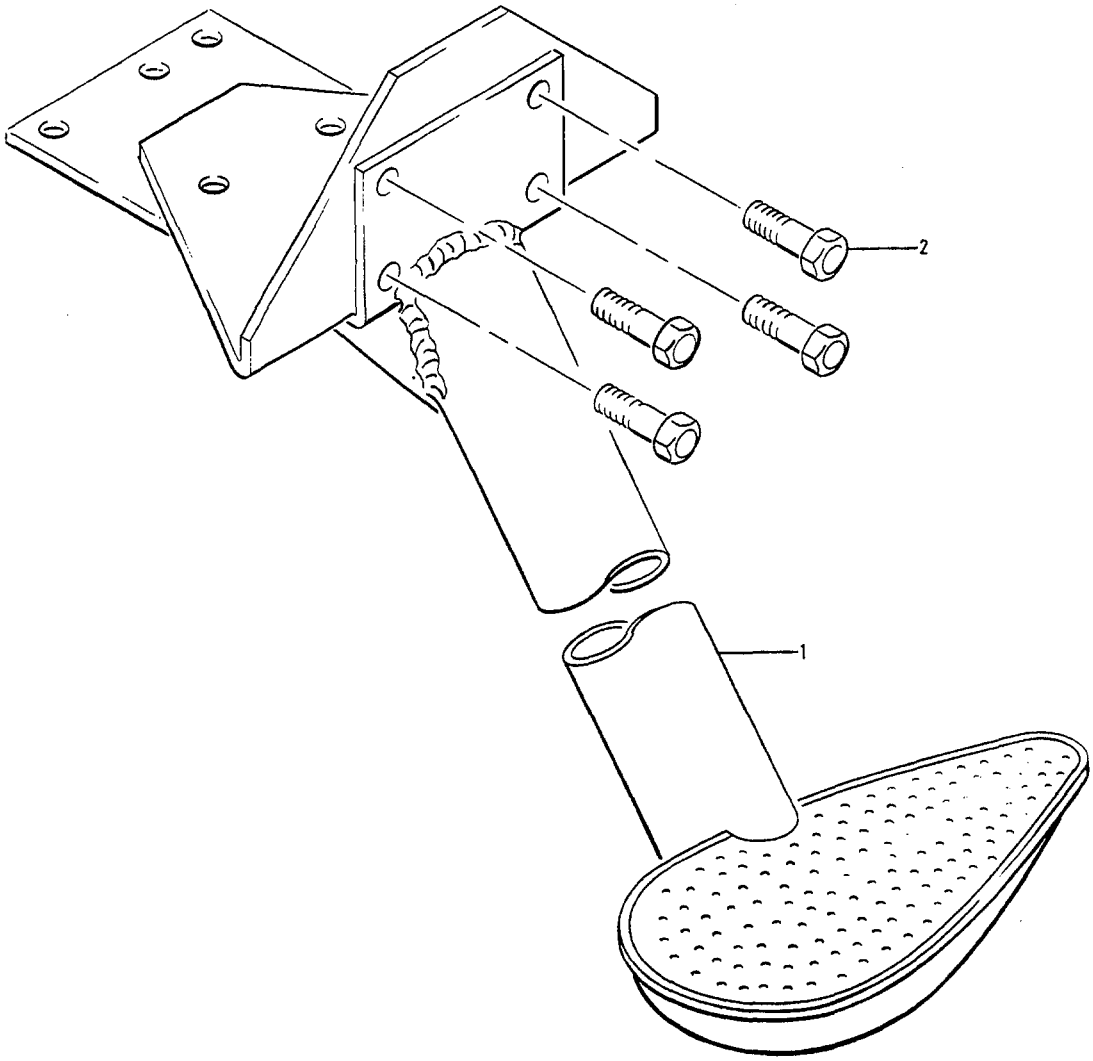

E55-112-1

FIGURE 60-01.ASSIST STEP

SUB-SECT UNIT & ITEM NO.	PART NO.	DESCRIPTION 1 2 3 4 5 6 7	UNITS PER ASSY	USABLE ON CODE
60-01	95-440014-45	STEP INSTALLATION,ASSIST.	NP	1
	95-440014-47	STEP INSTALLATION,ASSIST.	NP	2
- 1	95-440014-53	. STEP ASSY,ASSIST.	1	1
	95-440014-57	. STEP ASSY,ASSIST.	1	2
		/ATTACHING PARTS/		
- 2	NAS221-9	. SCREW	9	
	NAS680A3	. NUTPLATE.	4	3
	NAS682A3	. NUTPLATE.	5	3
	AN960-10	. WASHER.	9	4
	MS20365-1032	. NUT	9	4
		----*----		
	R 95-440006-105	DOUBLER	1	

CODES OF EFFECTIVITY

1	TC-1 THRU TC-1409 TE-1 THRU TE-851	2	TC-1410 THRU TC-1607 TE-852 THRU TE-942 EXCEPT TE-938
3	TC-1 THRU TC-1374 TE-1 THRU TE-882	4	TC-1375 THRU TC-1607 TE-883 THRU TE-942 EXCEPT TE-938

"END"

CHAPTER

53

FUSELAGE

LIST OF PAGES & TABLE OF CONTENTS
FOR
CHAPTER 53-00-00 FUSELAGE

CHAP/SUB-SECT & UNIT	PAGE NO.	EFFECTIVE DATE	TABLE OF CONTENTS
53-00-00	1	04/05/85	LIST OF PAGES & TABLE OF CONTENTS
53-00-00	2	04/05/85	
53-00-00	3	04/05/85	
53-10-01	1	03/10/78	NOSE STRUCTURE
53-10-01	2	03/10/78	TC-1 THRU TC-1607
53-10-01	3	03/10/78	
53-10-01	4	03/10/78	
53-10-01	5	04/05/85	
53-10-01	6	03/10/78	
53-10-01	7	04/05/85	
53-11-01	1	03/10/78	NOSE STRUCTURE
53-11-01	2	04/05/85	TE-1 THRU TE-942 EXCEPT TE-938
53-11-01	3	04/05/85	
53-11-01	4	03/10/78	
53-11-01	5	03/10/78	
53-11-01	6	03/10/78	
53-11-01	7	04/05/85	
53-11-01	8	03/10/78	
53-11-01	9	04/05/85	
53-11-01	10	03/10/78	
53-11-01	11	04/05/85	
53-12-01	1	03/10/78	KEEL ASSEMBLY
53-12-01	2	03/10/78	
53-12-01	3	04/05/85	
53-13-01	1	03/10/78	FIREWALL ASSY
53-13-01	2	03/10/78	
53-13-01	3	03/10/78	
53-13-01	4	03/10/78	
53-13-01	5	03/10/78	
53-14-01	1	03/10/78	CABIN SIDE STRUCTURE
53-14-01	2	03/10/78	TC-1 THRU TC-1607 EXCEPT TC-350
53-14-01	3	04/05/85	
53-14-01	4	03/10/78	
53-14-01	5	04/05/85	
53-14-50	1	03/10/78	CABIN SIDE STRUCTURE
53-14-50	2	03/10/78	TC-350 & TE-1 THRU TE-942 EXCEPT TE-938
53-14-50	3	03/10/78	
53-14-50	4	03/10/78	
53-14-50	5	04/05/85	
53-15-01	1	03/10/78	CABIN BOTTOM PANEL
53-15-01	2	03/10/78	
53-15-01	3	03/10/78	
53-15-01	4	03/10/78	
53-15-01	5	03/10/78	
53-15-01	6	03/10/78	
53-15-01	7	04/05/85	
53-16-50	1	03/10/78	CABIN CANOPY
53-16-50	2	03/10/78	TC-1 THRU TC-1402 EXCEPT TC-350
53-16-50	3	03/10/78	
53-16-50	4	03/10/78	
53-16-50	5	04/05/85	
53-16-50	6	03/10/78	
53-16-50	7	03/10/78	

LIST OF PAGES & TABLE OF CONTENTS
FOR
CHAPTER 53-00-00 FUSELAGE

CHAP/SUB-SECT & UNIT	PAGE NO.	EFFECTIVE DATE	TABLE OF CONTENTS
53-16-51	1	03/10/78	CANOPY SECTION
53-16-51	2	03/10/78	TC-350 & TC-1403 THRU TC-1607
53-16-51	3	03/10/78	TE-1 THRU TE 942 EXCEPT TE-938
53-16-51	4	03/10/78	
53-16-51	5	03/10/78	
53-16-51	6	03/10/78	
53-16-51	7	04/05/85	
53-17-01	1	03/10/78	FRONT SPAR CARRY THRU STRUCTURE
53-17-01	2	03/10/78	TC-1 THRU TC-1525 EXCEPT TC-1471
53-17-01	3	04/05/85	TE-1 THRU TE-896
53-17-01	4	03/10/78	
53-17-01	5	03/10/78	
53-17-02	1	03/10/78	FRONT SPAR CARRY THRU
53-17-02	2	03/10/78	TC-1471,TC-1526 THRU TC-1607
53-17-02	3	03/10/78	TE-897 THRU TE-942 EXCEPT TE-938
53-17-02	4	03/10/78	
53-17-02	5	03/10/78	
53-17-50	1	03/10/78	REAR SPAR CARRY THRU STRUCTURE
53-17-50	2	03/10/78	TC-1 THRU TC-1525 EXCEPT TC-1471
53-17-50	3	03/10/78	TE-1 THRU TE-896
53-17-50	4	03/10/78	
53-17-50	5	03/10/78	
53-17-52	1	03/10/78	REAR SPAR CARRY THRU
53-17-52	2	03/10/78	TC-1471,TC-1526 THRU TC-1607
53-17-52	3	03/10/78	TE-897 THRU TE-942 EXCEPT TE-938
53-18-01	1	03/10/78	AFT FUSELAGE STRUCTURE
53-18-01	2	03/10/78	
53-18-01	3	04/05/85	
53-18-01	4	03/10/78	
53-18-01	5	04/05/85	
53-18-01	6	03/10/78	
53-18-01	7	03/10/78	
53-18-01	8	03/10/78	
53-18-01	9	03/10/78	
53-18-01	10	03/10/78	
53-18-01	11	04/05/85	
53-18-01	12	03/10/78	
53-18-01	13	04/05/85	
53-20-01	1	03/10/78	FLOORBOARD INSTALLATION
53-20-01	2	03/10/78	
53-20-01	3	04/05/85	
53-20-01	4	03/10/78	
53-20-01	5	04/05/85	
53-25-01	1	03/10/78	PEDESTAL STRUCTURE
53-25-01	2	03/10/78	
53-25-01	3	04/05/85	
53-25-01	4	03/10/78	
53-25-01	5	03/10/78	
53-25-01	6	03/10/78	
53-25-01	7	04/05/85	
53-25-01	8	03/10/78	
53-25-01	9	03/10/78	
53-25-01	10	03/10/78	
53-25-01	11	04/05/85	

LIST OF PAGES & TABLE OF CONTENTS
FOR
CHAPTER 53-00-00 FUSELAGE

CHAP/SUB-SECT & UNIT	PAGE NO.	EFFECTIVE DATE	TABLE OF CONTENTS
53-30-01	1	03/10/78	FUSELAGE SKINS
53-30-01	2	03/10/78	TC-1 THRU TC-1607 EXCEPT TC-350
53-30-01	3	03/10/78	
53-30-01	4	03/10/78	
53-30-01	5	03/10/78	
53-32-01	1	03/10/78	FUSELAGE SKINS
53-32-01	2	03/10/78	TC-350,TE-1 THRU TE-942 EXCEPT TE-938
53-32-01	3	03/10/78	
53-32-01	4	03/10/78	
53-32-01	5	03/10/78	
53-50-01	1	03/10/78	NOSE CONE
53-50-01	2	03/10/78	TC-1 THRU TC-501
53-50-01	3	03/10/78	
53-50-10	1	03/10/78	NOSE CONE
53-50-10	2	03/10/78	TC-502 THRU TC-1607
53-50-10	3	03/10/78	TE-1 THRU TE-942 EXCEPT TE-938
53-50-10	4	03/10/78	
53-50-10	5	03/10/78	
53-50-20	1	03/10/78	NOSE CONE
53-50-20	2	03/10/78	USED ONLY ON RADAR EQUIPPED AIRCRAFT
53-50-20	3	03/10/78	TC-797 THRU TC-1607
			TC-350,TE-1 THRU TE-942 EXCEPT TE-938
53-51-01	1	03/10/78	TAIL CONE
53-51-01	2	03/10/78	
53-51-01	3	03/10/78	
53-52-01	1	03/10/78	DORSAL FAIRING
53-52-01	2	03/10/78	TC-1 THRU TC-954 EXCEPT TC-350
53-52-01	3	03/10/78	
53-52-02	1	03/10/78	DORSAL FAIRING
53-52-02	2	03/10/78	TC-350,TC-955 THRU TC-1091
53-52-02	3	04/05/85	TE-1 THRU TE-558
53-52-03	1	03/10/78	DORSAL FAIRING
53-52-03	2	03/10/78	TC-1092 THRU TC-1607 AND TE-559 THRU TE-942
53-52-03	3	03/10/78	EXCEPT TE-938

53-10-01
NOSE STRUCTURE
TC-1 THRU TC-1607

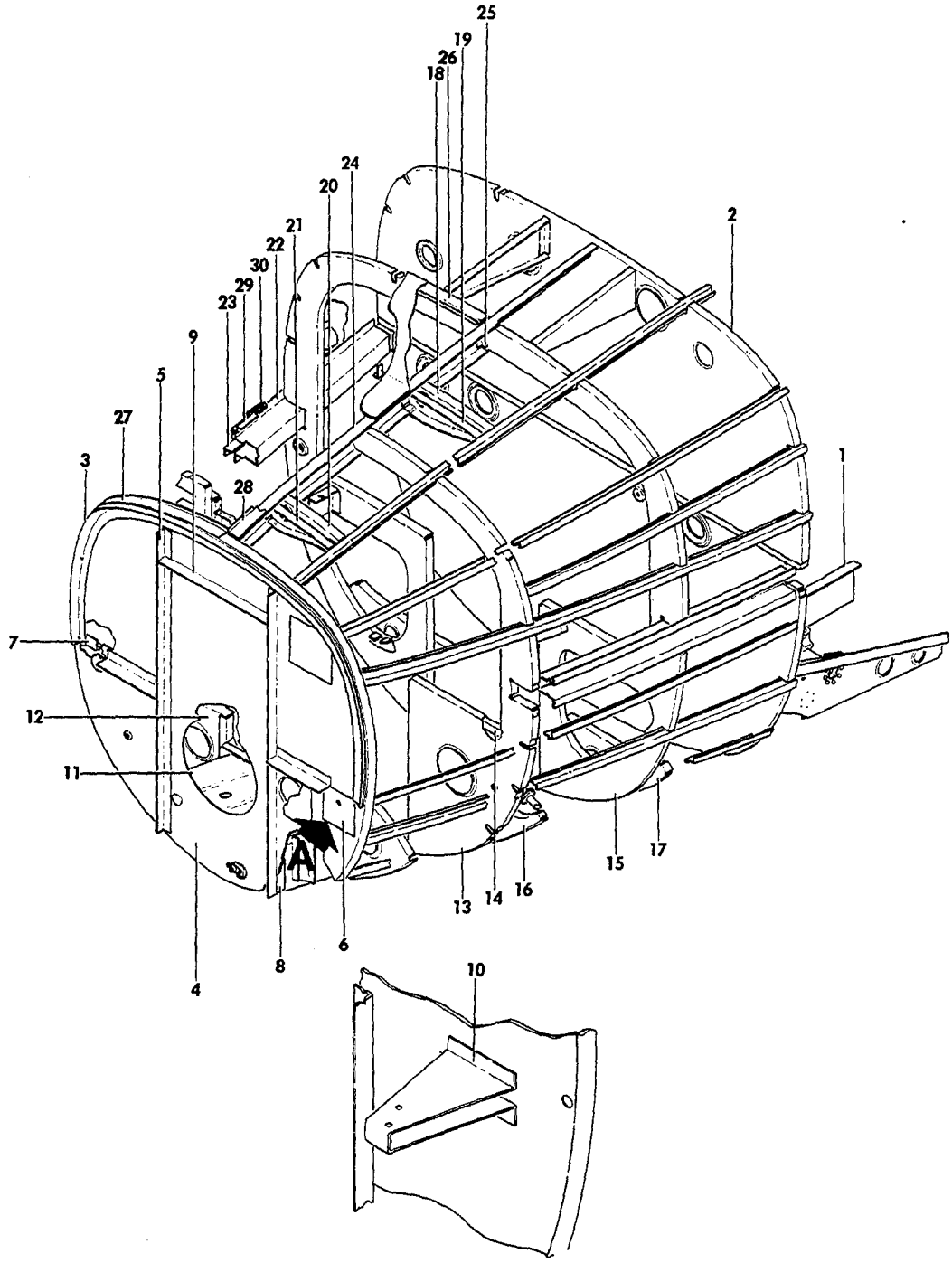

VIEW **A**

B55-91-20

FIGURE 10-01.NOSE STRUCTURE
/SHEET 1 OF 3 SHEETS/

ATA CODE & INDEX NO.	PART NO.	DESCRIPTION 1 2 3 4 5 6 7	UNITS PER ASSY	USABLE ON CODE
10-01	95-400005-612	NOSE ASSY,FUSELAGE.	1	12
	96-400000-612	NOSE ASSY,FUSELAGE.	1	13
- 1	95-410030-611	. KEEL ASSY,LH/SEE CHAPTER 53-12-01/.	1	3
	95-410030-612	. KEEL ASSY,RH/SEE CHAPTER 53-12-01/.	1	3
- 2	95-410030-604	. FIREWALL ASSY,STA 49 LOWER/SEE 53-13-01/.	1	4
	95-410030-622	. FIREWALL ASSY,STA 49 LOWER/SEE 53-13-01/.	1	5
- 3	95-410030-197	. BULKHEAD ASSY,STA 12.	1	3
- 4	95-410030-29	. . WEB,BULKHEAD.	1	6
	95-410030-165	. . WEB,BULKHEAD.	1	7
- 5	95-410030-32	. . ANGLE,RH.	1	6
	95-410030-172	. . ANGLE,RH.	1	7
	95-410030-31	. . ANGLE,LH.	1	6
	95-410030-171	. . ANGLE,LH.	1	7
- 6	95-410030-173	. . DOUBLER	1	7
	95-410030-169	. . DOUBLER,TOP BULKHEAD.	2	7
- 7	95-410030-33	. . ANGLE	1	6
	95-410030-149	. . ANGLE	1	7
	95-410030-153	. . ANGLE,SHELF SUPPORT LH.	1	7
	95-410030-154	. . ANGLE,SHELF SUPPORT RH.	1	7
- 8	95-410030-35	. . ANGLE,LH.	1	3
	95-410030-36	. . ANGLE,RH.	1	3
- 9	95-410030-77	. . ANGLE	1	3
	NAS680A3	. . NUT PLATE	17	3
- 10	95-410030-75	. . BRACKET,NOSE CONE RETAINING	1	6
	95-410040-29	. . BRACKET,NOSE CONE RETAINING	1	7
	109615-4-081	. . CHAIN,NOSE CONE PIN	1	7
	NAS1334S6S10D	. . PIN,NOSE CONE RETAINING	1	7
- 11	95-410030-21	. BRACKET,NOSE WHEEL STRAIGHTNER.	1	3
	95-410030-95	. TRACK,NOSE GEAR STRAIGHTNER	1	3
	95-410005-3	. FORMER,LH STA 18.25	1	3
- 12	95-410005-4	. FORMER,RH STA 18.25	1	3
- 13	95-410005-5	. BULKHEAD,STA 25.25 LH	1	1
	002-410059-17	. BULKHEAD,STA 25.25 LH	1	2
	95-410006-43	. BULKHEAD,STA 21.62 RH	1	1
	002-410059-15	. BULKHEAD,STA 21.62 RH	1	2
- 14	95-410005-9	. ANGLE,LH BULKHEAD	2	3
	95-410005-10	. ANGLE,RH BULKHEAD	2	3
- 15	95-410005-11	. FRAME,BULKHEAD STA 38.25 LH	1	3
	95-410006-3	. BULKHEAD ASSY, STA 38.25 RH	1	1
	002-410059-1	. BULKHEAD ASSY,STA 38-25 RH.	1	2
- 16	95-410005-17	. FORMER,STA 29.25 LH	1	3
- 17	95-410005-19	. FORMER,STA 40.75 LH	1	3
	95-410006-61	. FORMER,STA 40.75 RH	1	3
- 18	95-410005-21	. BRACKET,AFT HINGE AFT	1	8
	95-410006-91	. BRACKET,AFT HINGE AFT	1	9
- 19	95-410005-23	. BRACKET,AFT HINGE FWD	1	8
	95-410006-93	. BRACKET,AFT HINGE FWD	1	9
- 20	95-410005-25	. BRACKET,FWD HINGE AFT	1	8
	95-410006-87	. BRACKET,FWD HINGE AFT	1	9
- 21	95-410005-27	. BRACKET,FWD HINGE FWD	1	8
	95-410006-89	. BRACKET,FWD HINGE FWD	1	9
	95-410005-135	. CHANNEL,LH HAT SECTION.	1	3
- 22	95-410005-136	. CHANNEL,RH HAT SECTION.	1	3
	AN366F428	. NUTPLATE.	2	3
- 23	95-410005-31	. ANGLE,LATCH REINFORCEMENT	2	3
- 24	95-410005-33	. CHANNEL,BAGGAGE DOOR UPPER FRAME.	1	1
	002-410070-5	. CHANNEL,BAGGAGE DOOR UPPER FRAME.	1	2
- 25	95-410005-35	. ANGLE,UPPER AFT DOOR FRAME.	1	3
- 26	95-410005-37	. RETAINER,DOOR SEAL AFT.	1	3
- 27	95-410005-39	. RETAINER,DOOR SEAL FWD.	1	3
- 28	95-410005-41	. RETAINER,DOOR SEAL UPPER.	1	3
- 29	95-410005-43	. RETAINER,DOOR SEAL LOWER.	1	3
- 30	95-410005-49	. SEAL,NOSE BAGGAGE DOOR.	1	1

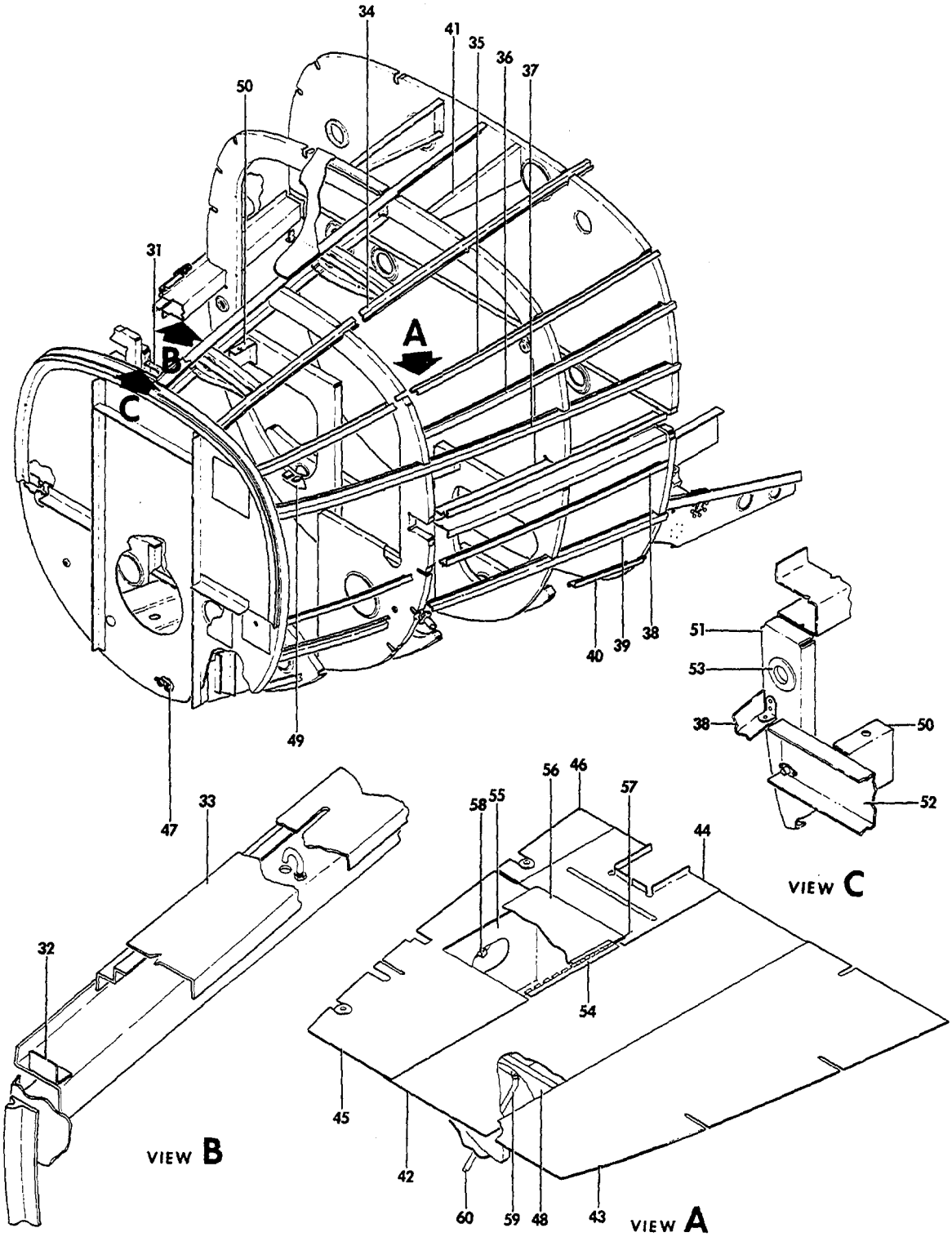

FIGURE 10-01.NOSE STRUCTURE
/SHEET 2 OF 3 SHEETS/

SUB-SECT UNIT & ITEM NO.	PART NO.	DESCRIPTION 1 2 3 4 5 6 7	UNITS PER ASSY	USABLE ON CODE
10-01	95-410006-117	. SEAL ASSY,NOSE BAGGAGE DOOR	1	2
- 31	95-410005-143	. CLIP,UPPER FWD SEAL RETAINER.	1	3
- 32	95-410005-45	. ANGLE,LOWER FWD DOOR FRAME.	1	3
- 33	95-410005-47	. LEDGE,DOOR LOWER.	1	3
- 34	95-410005-65	. STRINGER,LH /B/	1	3
	95-410005-66	. STRINGER,RH /B/	1	3
- 35	95-410005-67	. STRINGER,LH /C/	1	3
	95-410005-68	. STRINGER,RH/C/.	1	3
- 36	R 95-410005-69	. STRINGER,LH/D/.	1	3
- 37	95-410005-71	. STRINGER,LH/F/.	1	3
	95-410005-72	. STRINGER,RH/F/.	1	3
- 38	95-410005-73	. ANGLE,LH BAGGAGE COMPT FLOOR.	1	3
	95-410006-39	. ANGLE,RH BAGGAGE COMPT FLOOR FWD.	1	3
	95-410006-41	. ANGLE,RH BAGGAGE COMPT FLOOR AFT.	1	3
	AN743-13	. BRACKET	2	3
- 39	95-410005-75	. STRINGER,LH/H/.	1	3
	95-410005-76	. STRINGER,RH/H/.	1	3
- 40	95-410005-77	. ANGLE,LH STRINGER/I/.	1	3
	95-410005-78	. ANGLE,RH STRINGER/I/.	1	3
- 41	95-410006-80	. CHANNEL,LH.	1	3
	95-410006-79	. CHANNEL,RH.	1	3
- 42	95-410005-85	. WEB,NOSE WHEEL WELL COVER	1	3
- 43	95-410006-35	WEB,NOSE BAGGAGE FLOOR BOARD.	1	3
- 44	95-410006-65	WEB,NOSE BAGGAGE FLOOR BOARD.	1	3
- 45	95-410006-37	WEB,NOSE BAGGAGE FLOOR BOARD.	1	3
- 46	95-410006-63	WEB,NOSE BAGGAGE FLOOR BOARD.	1	3
		/ATTACHING PARTS/		
	SL201-6AA11	CLIP NUT.	64	
	SL100-10-8-1	CLIP NUT/ALT FOR SL201-6AA11 CLIP NUT/.	64	
	AN525-10R6	SCREW	64	
		----*----		
	95-410006-145	CARPET ASSY,NOSE BAGGAGE COMPARTMENT.	1	3
- 47	95-410030-19	. SPACER.	1	3
	AN366F428	. NUTPLATE.	1	3
- 48	95-410030-607	. BRACKET ASSY,HEATER SUPPORT	1	3
- 49	95-410006-67	. CLIP.	1	3
- 50	95-410006-5	. BRACKET,BATTERY BOX DOOR SUPPORT.	2	3
- 51	95-410006-7	. SUPPORT,BULKHEAD STA 22.36 RH	1	3
- 52	95-410006-9	. CHANNEL,BULKHEAD STA 22.36 RH	1	3
		/ATTACHING PARTS/		
	NAS680-1032	. NUTPLATE.	4	
	AN3-4A	. BOLT.	4	
		----*----		
- 53	MS35489-19	. GROMMET	3	3
- 54	95-410006-81	. HINGE HALF,BATTERY BOX DOOR FUSELAGE.	1	3
- 55	95-410006-610	BOX ASSY,BATTERY.	1	3
	95-410006-15	SHIM.	1	3
		/ATTACHING PARTS/		
	NAS680-1032	NUTPLATE.	7	
	AN520-10	SCREW	7	
		----*----		
- 56	95-410006-603	LID ASSY,BATTERY BOX/STANDARD ONE BATTERY/.	1	3
	95-410006-601	LID ASSY,BATTERY BOX/OPTIONAL TWO BATTERIES	1	3
		/ATTACHING PARTS/		
- 57	95-410006-27	PIN,BATTERY BOX DOOR HINGE.	1	
		----*----		
- 58	95-410006-51	TUBE,BATTERY BOX VENT	1	14
	95-410006-97	TUBE,BATTERY BOX VENT	1	15
- 59	95-410006-59	DRAIN,BATTERY BOX	1	3
- 60	95-410006-57	MAST ASSY,BATTERY BOX DRAIN	1	3

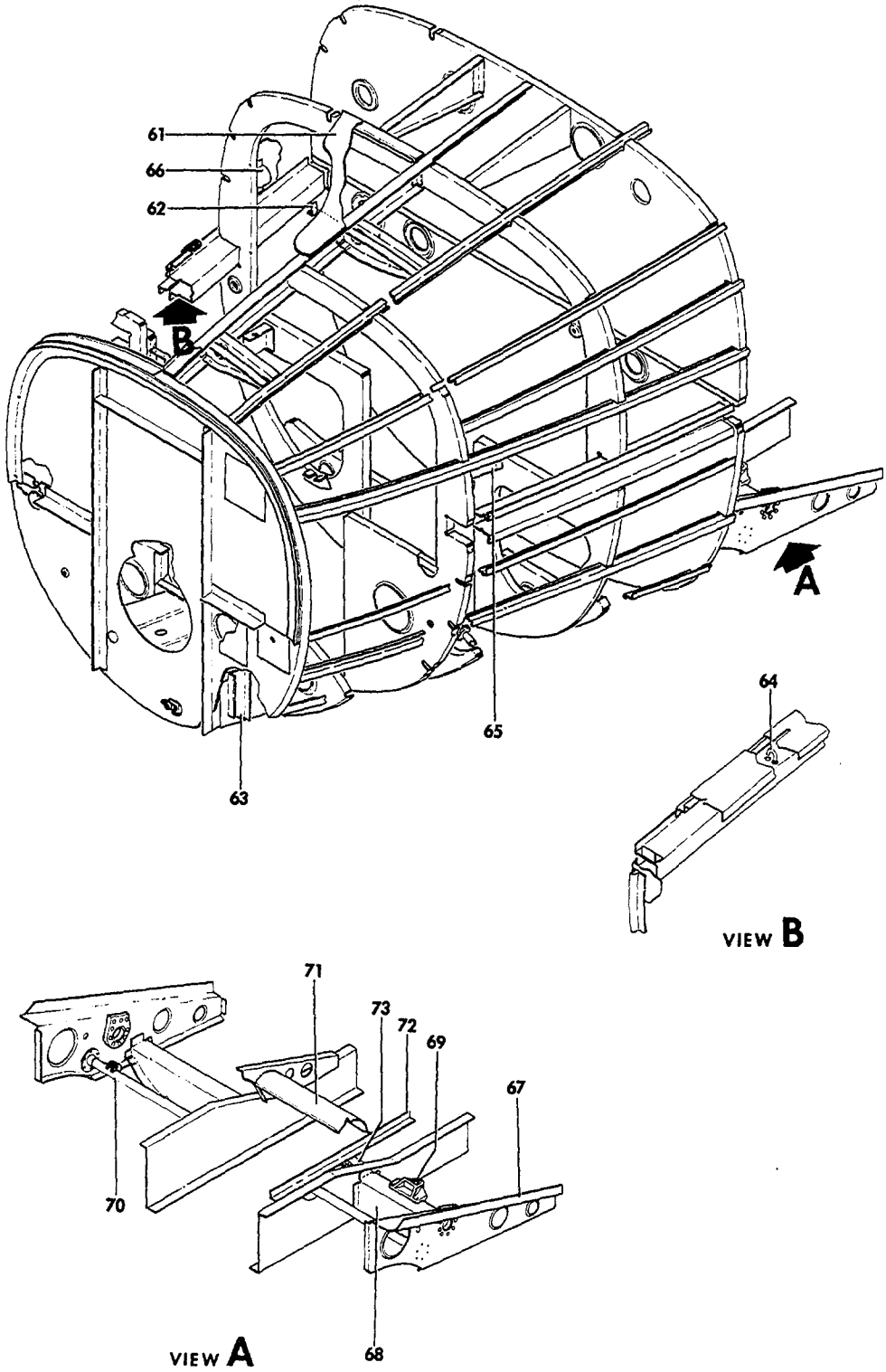

FIGURE 10-01.NOSE STRUCTURE
/SHEET 3 OF 3 SHEETS/

SUB-SECT UNIT & ITEM NO.	PART NO.	DESCRIPTION 1 2 3 4 5 6 7	UNITS PER ASSY	USABLE ON CODE
10-01	95-410029	DOOR INSTL,NOSE BAGGAGE	NP	3
- 61	95-410029-602	. DOOR ASSY,NOSE BAGGAGE/SEE 52-35-01/.	1	1
	95-410029-612	. DOOR ASSY,NOSE BAGGAGE/SEE 52-35-01/.	1	16
	R 95-410029-613	. DOOR ASSY,NOSE BAGGAGE/SEE CHAPTER 52-35-02/.	1	11
		/ATTACHING PARTS/		
	AN4-6A/M/	. BOLT.	2	
	105739X-X00219	. BUSHING	2	
	AN960-416L	. WASHER.	2	
	MS20365-428	. NUT/SUPERSEDES AN365-428/	2	
		----*----		
	115005-2	. GROMMET,DOOR HOLD OPEN STOP	1	3
	MS35489-11	. GROMMET,BATTERY BOX VENT HOSE	1	3
- 62	95-410005-203	. ANGLE,DOOR OPEN STOP.	1	3
	AN520-10R28	. SCREW DOOR STOP	1	3
	AN960-10	. WASHER.	2	3
	MS20364-1032	. NUT	2	3
- 63	R 002-410032-17	. SUPPORT ASSY,NOSE GEAR STRAIGHTENER	1	3
	AN366F428	. NUTPLATE.	1	3
- 64	95-410005-201	. HOOK,NOSE ACCESS DOOR	1	16
		/ATTACHING PARTS/		
	AN315-3R	. NUT	1	
	MS35338-43	. WASHER.	1	
	AN960-10	. WASHER.	1	
	MS20365-1032	. NUT	1	
		----*----		
	95-410005-63	. SPLICE,LH/I/STRINGER.	1	3
	95-410005-64	. SPLICE,RH/I/STRINGER.	1	3
- 65	35-415530-62	. CLAMP,BRAKE FLUID RESERVOIR	1	3
- 66	95-410005-191	. VENT.	2	3
- 67	35-400364-10	. CHANNEL ASSY,RUDDER PEDAL LH.	1	3
	35-400364-1	. CHANNEL ASSY,RUDDER PEDAL RH.	1	3
	A6191-621	. . NUTPLATE.	3	3
	8146	. . BEARING,LH.	1	3
	A1170-6	. . BEARING,RH.	1	3
- 68	35-400366-10	. SUPPORT ASSY,LH	1	3
	35-400366-1	. SUPPORT ASSY,RH	1	3
- 69	35-524136	. . SUPPORT,RUDDER BELLCRANK.	1	3
		/ATTACHING PARTS/		
	AN3-5A/M/	. . BOLT.	4	
	AN960-10	. . WASHER.	4	
		----*----		
- 70	35-400359-10	. SUPPORT ASSY,MASTER CYLINDER LH	1	3
	35-400359-12	. SUPPORT ASSY,MASTER CYLINDER RH	1	3
- 71	95-420011-61	. SUPPORT ASSY,PULLEY	1	3
- 72	35-410444-25	. STIFFNER.	1	3
- 73	95-420011-109	. DOUBLER,STA 56.12 LOWER FUSELAGE ACCESS DOOR.	1	3
	NAS680A3	. NUTPLATE/SUPERSEDES AN366F1032/	6	3
	22A5-02	. NUTPLATE/SUPERSEDES 22NA5-02/	4	3

CODES OF EFFECTIVITY

1	TC-1 THRU TC-537 EXCEPT TC-408	2	TC-408,TC-538 THRU TC-1607
3	TC-1 THRU TC-1607	4	TC-1 THRU TC-954
5	TC-955 THRU TC-1607	6	TC-1 THRU TC-501
7	TC-502 THRU TC-1607	8	TC-1 THRU TC-537 EXCEPT TC-350 AND TC-408
9	TC-350,TC-408, TC-538 THRU TC-1607	10	TC-1 THRU TC-1042
11	TC-1043 THRU TC-1607	12	TC-1 THRU TC-190
13	TC-191 THRU TC-1607	14	TC-1 THRU TC-579 EXCEPT TC-350
15	TC,350,TC-580 THRU TC-1607	16	TC-538 THRU TC-1042

53-11-01
NOSE STRUCTURE
TE-1 THRU TE-942 EXCEPT TE-938

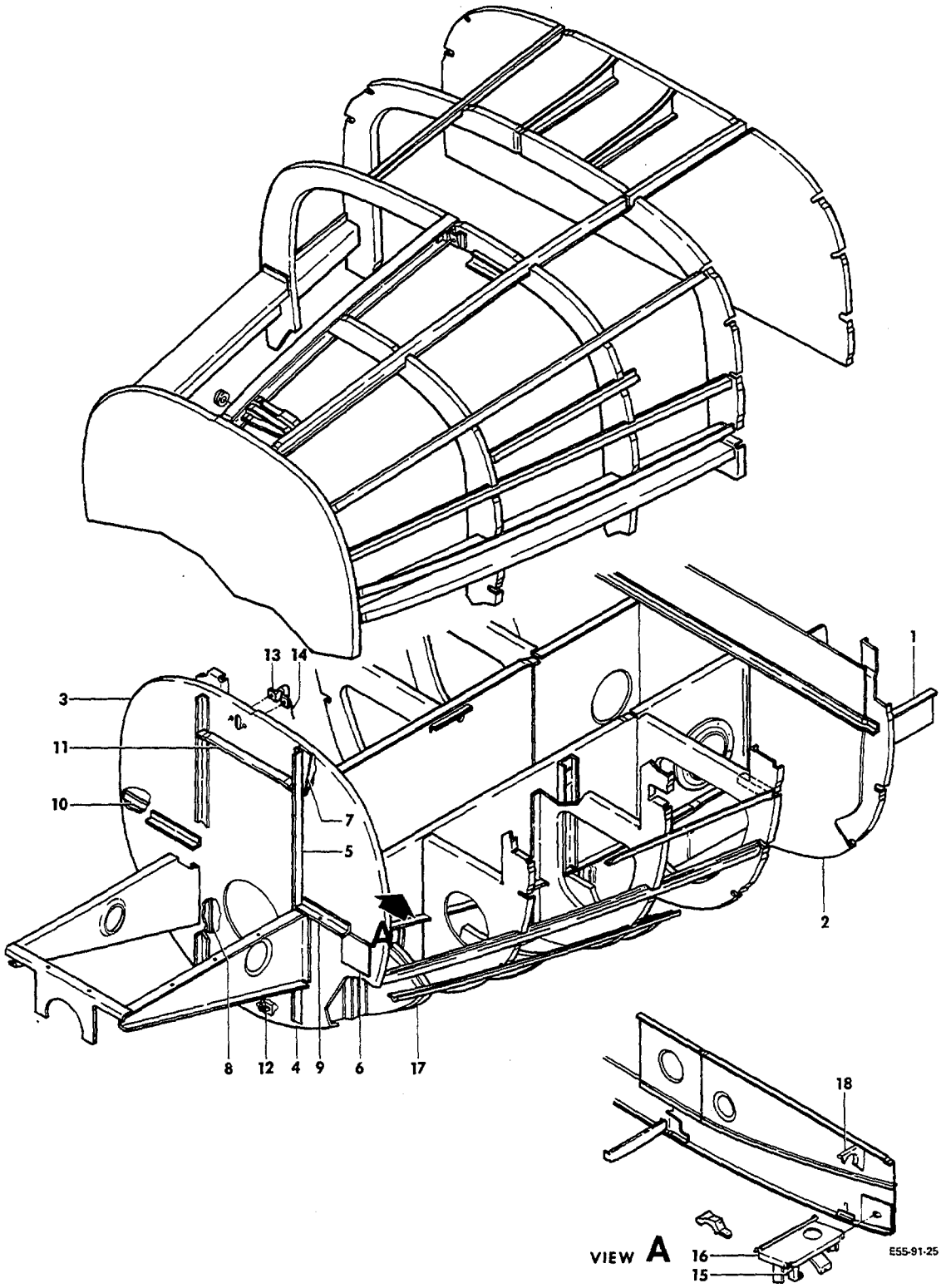

FIGURE 11-01. NOSE STRUCTURE
/SHEET 1 OF 5 SHEETS/

REVISED
04/05/85

SUB-SECT UNIT & ITEM NO.	PART NO.	DESCRIPTION 1 2 3 4 5 6 7	UNITS PER ASSY	USABLE ON CODE
11-01	96-410031	STRUCTURE ASSY,FUSELAGE NOSE.	1	2
	96-410031-33	STRUCTURE ASSY,FUSELAGE NOSE.	1	5
	96-410031-49	STRUCTURE ASSY,FUSELAGE NOSE.	1	4
	96-400001-612	. NOSE ASSY,FUSELAGE.	1	10
	KA4000	. NOSE ASSY,FUSELAGE.	1	4
- 1	96-410032-611	. . KEEL ASSY,LH/SEE 53-12-01/.	1	10
	96-410032-612	. . KEEL ASSY,RH/SEE 53-12-01/.	1	10
	96-410032-621	. . KEEL ASSY,LH/SEE 53-12-01/.	1	4
	96-410032-622	. . KEEL ASSY,RH/SEE 53-12-01/.	1	4
- 2	96-410032-604	. . FIREWALL ASSY,STA 49 LOWER/SEE 53-13-01/.	1	1
- 3	95-410030-197	. . BULKHEAD ASSY,STA 0.0	1	6
	95-410030-624	. . BULKHEAD ASSY,STA 0.0	1	7
- 4	95-410030-165	. . . WEB,BULKHEAD.	1	1
	115092-05200	. . . EXTRUSION	1	1
		/ATTACHING PARTS/		
	MYSTIC 105	. . . ADHESIVE.	1	
		----*----		
- 5	95-410030-171	. . . ANGLE,LH.	1	6
	95-410030-201	. . . ANGLE,LH.	1	7
	95-410030-172	. . . ANGLE,RH.	1	6
	95-410030-202	. . . ANGLE,RH.	1	7
- 6	95-410030-175	. . . DOUBLER,LH.	1	1
- 7	95-410030-169	. . . DOUBLER,TOP	2	1
	95-410030-35	. . . ANGLE,BULKHEAD STIFFENER LH	1	1
- 8	95-410030-36	. . . ANGLE,BULKHEAD STIFFENER RH	1	1
- 9	95-410030-153	. . . ANGLE,RADIO SHELF SUPPORT LH.	1	1
	95-410030-154	. . . ANGLE,RADIO SHELF SUPPORT RH.	1	1
- 10	95-410030-149	. . . ANGLE,RADIO SHELF SUPPORT CENTER.	1	1
- 11	95-410030-77	. . . ANGLE,BULKHEAD TOP.	1	1
- 12	95-410030-19	. . . SPACER.	1	1
	AN366F420	. . . NUTPLATE.	1	1
- 13	95-410040-29	. . . BRACKET,NOSE CONE RETAINING	1	1
	NAS1334S6510D	. . . PIN,NOSE CONE RETAINING	1	1
		/ATTACHING PARTS/		
	MS21047L3	. . . NUTPLATE.	17	
	AN515-8R	. . . SCREW	2	
	AN960-6	. . . WASHER.	2	
		----*----		
- 14	109615-4-081	. . . CHAIN,NOSE CONE RETAINING PIN	1	1
		/ATTACHING PARTS/		
	AN515-8R	. . . SCREW	1	
	AN960-6	. . . WASHER.	1	
	MS21047L06	. . . NUT	1	
		----*----		
	MS21049L08	. . . NUTPLATE.	2	1
	MS35489-11	. . . GROMMET	1	1
	MS35489-6	. . . GROMMET	1	13
	MS35489-43	. . . GROMMET	1	12
- 15	R 002-410032-17	. . SUPPORT ASSY,NOSE GEAR.	1	1
- 16	95-410030-21	. . BRACKET,NOSE GEAR STRAIGHTENER.	1	2
	96-410032-35	. . BRACKET,NOSE GEAR STRAIGHTENER.	1	5
	95-410030-95	. . TRACK,NOSE GEAR STRAIGHTENER.	1	2
	95-820030	. . TRACK,NOSE GEAR STRAIGHTENER.	1	5
- 17	95-410005-3	. . FORMER,LH	1	1
	95-410005-4	. . FORMER,RH	1	1
- 18	95-410030-27	. . SUPPORT,HEATER.	1	1

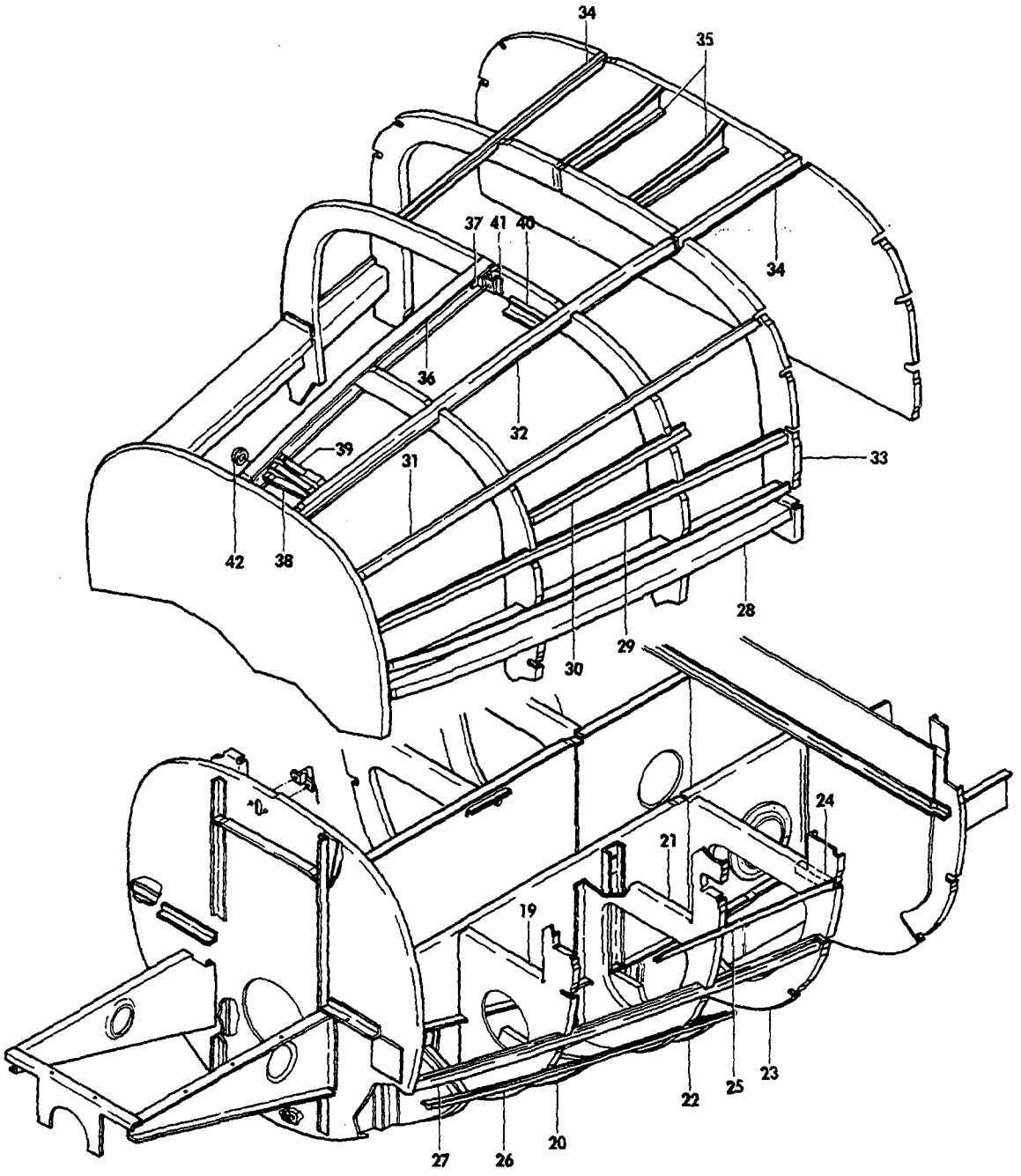

E55-91-26

FIGURE 11-01.NOSE STRUCTURE
/SHEET 2 OF 5 SHEETS/

ATA CODE & INDEX NO.	PART NO.	DESCRIPTION 1 2 3 4 5 6 7	UNITS PER ASSY	USABLE ON CODE
11-01 - 19	95-410005-5	BULKHEAD,LH	1	1
	95-410006-43	BULKHEAD,RH	1	1
	MS35489-19	GROMMET	1	1
- 20	95-410005-17	FORMER ASSY	1	1
- 21	95-410005-11	FRAME,BULKHEAD LH	1	1
	95-410006-1	FRAME,BULKHEAD RH	1	1
	95-410006-67	CLIP	1	1
- 22	95-410005-19	FORMER,LH	1	1
	95-410006-61	FORMER,RH	1	1
- 23	96-410031-13	FRAME,LOWER BULKHEAD LH	1	1
	96-410031-14	FRAME,LOWER BULKHEAD RH	1	1
	MS35489-19	GROMMET	1	1
- 24	95-410005-9	ANGLE,BULKHEAD ATTACH LH	2	1
	95-410005-10	ANGLE,BULKHEAD ATTACH RH	2	1
- 25	95-410005-73	ANGLE,LH BAGGAGE COMPARTMENT FLOOR FWD	1	1
	95-410006-39	ANGLE,RH BAGGAGE COMPARTMENT FLOOR FWD	1	1
	95-410006-41	ANGLE,RH BAGGAGE COMPARTMENT FLOOR AFT	1	1
	AN743-13	CLIP,ANGLE ATTACH	2	1
		/ATTACHING PARTS/		
	AN3-4A	BOLT	2	
	AN960-10	WASHER	2	
	MS20365-1032	NUT	2	
		——*——		
- 26	95-410005-77	ANGLE,LH STRINGER/I/	1	1
	95-410005-78	ANGLE,RH STRINGER/I/	1	1
- 27	96-410031-27	STRINGER,LH/H/	1	1
	96-410031-28	STRINGER,RH/H/	1	1
- 28	95-410005-135	CHANNEL,LH HAT SECTION	1	1
	95-410005-136	CHANNEL,RH HAT SECTION	1	10
	95-410006-111	CHANNEL,RH HAT SECTION	1	4
	95-410005-31	ANGLE,LATCH REINFORCEMENT	2	10
- 29	96-410031-25	STRINGER,LH/D/	1	1
	96-410031-26	STRINGER,RH/D/	1	1
- 30	96-410031-23	STRINGER,LH ONLY/X/	1	1
- 31	96-410031-21	STRINGER,TOP LH/C/	1	1
	96-410031-22	STRINGER,TOP RH/C/	1	1
- 32	96-410031-19	STRINGER,TOP LH/B/	1	1
	96-410031-20	STRINGER,TOP RH/B/	1	1
- 33	96-410031-15	FRAME,UPPER BULKHEAD LH/STA 37.0/	1	1
	96-410031-16	FRAME,UPPER BULKHEAD RH/STA 37.0/	1	1
- 34	96-420001-27	STRINGER,TOP AFT LH/B/	1	10
	96-420001-28	STRINGER,TOP AFT RH/B/	1	10
	96-420001-197	STRINGER,TOP AFT LH/B/	1	4
	96-420001-198	STRINGER,TOP AFT RH/B/	1	4
- 35	96-410031-17	BRACKET,	2	1
	95-410030-131	ANGLE,BRACKET ATTACH	2	1
- 36	95-410006-95	CHANNEL,BAGGAGE DOOR UPPER FRAME	1	10
	002-410070-5	CHANNEL,BAGGAGE DOOR UPPER FRAME	1	4
- 37	95-410005-35	ANGLE,UPPER AFT DOOR FRAME	1	1
- 38	95-410006-89	BRACKET,FWD HINGE FWD	1	1
- 39	95-410006-87	BRACKET,FWD HINGE AFT	1	1
- 40	95-410006-93	BRACKET,AFT HINGE FWD	1	1
- 41	95-410006-91	BRACKET,AFT HINGE AFT	1	1
- 42	115005-2	GROMMET	1	1

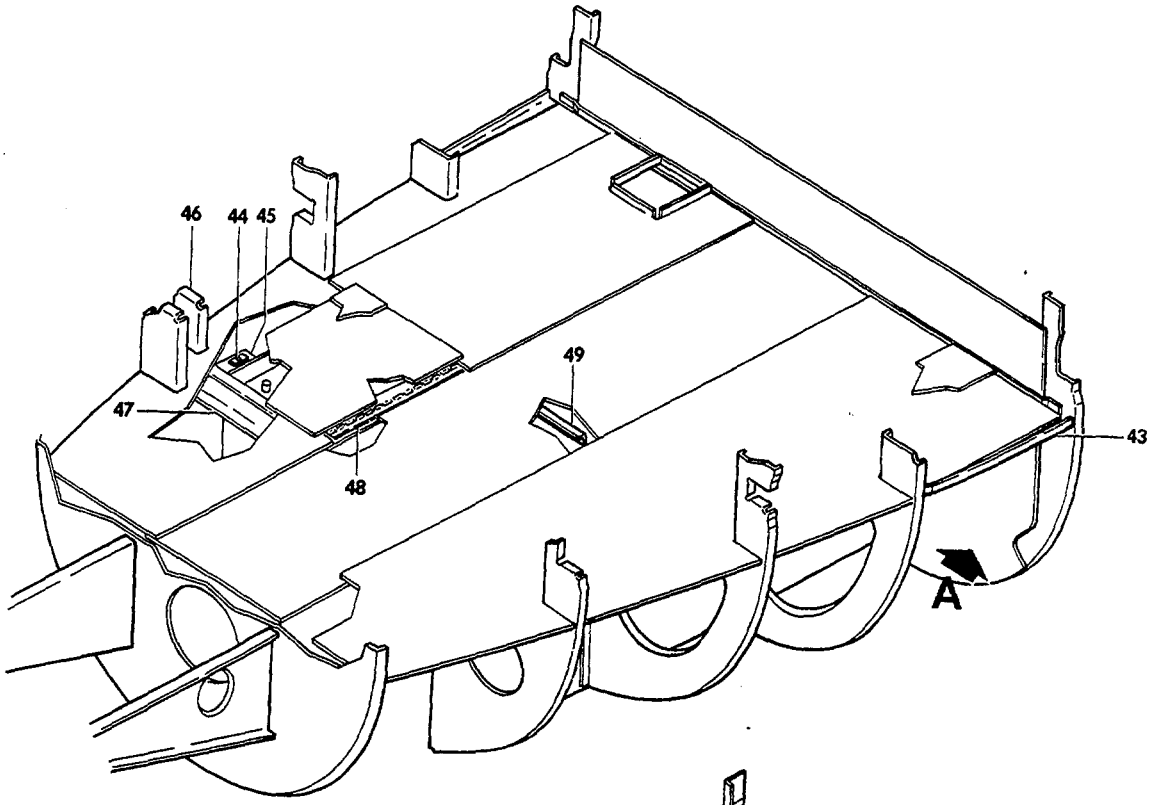

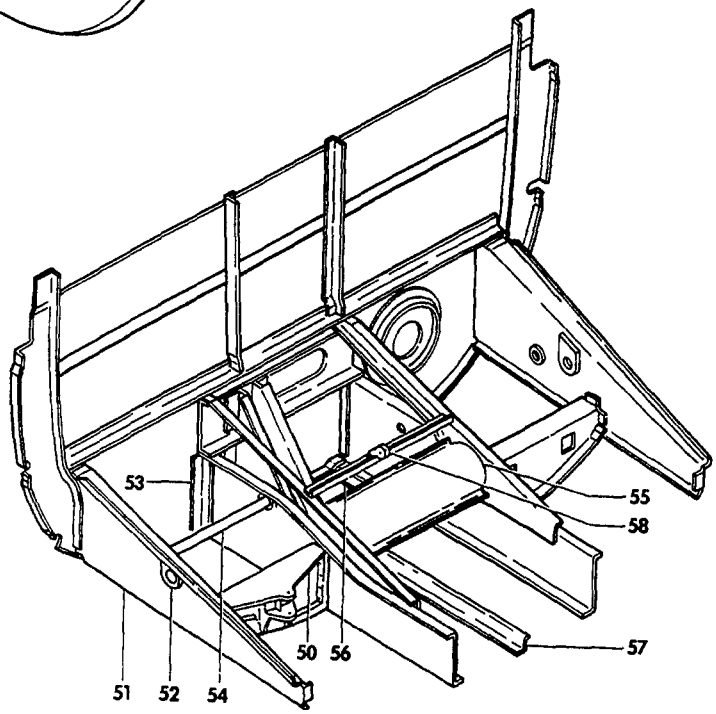

E55-91-27

VIEW A

FIGURE 11-01.NOSE STRUCTURE
/SHEET 3 OF 5 SHEETS/

SUB-SECT UNIT & ITEM NO.	PART NO.	DESCRIPTION 1 2 3 4 5 6 7	UNITS PER ASSY	USABLE ON CODE
11-01 - 43	96-410031-9	. . ANGLE,BAGGAGE COMPARTMENT FLOOR LH.	1	1
	96-410031-10	. . ANGLE,BAGGAGE COMPARTMENT FLOOR RH.	1	1
- 44	95-410006-5	. . BRACKET,BATTERY BOX DOOR SUPPORT.	2	1
- 45	99871P098	. . RECEPTACLE,BATTERY BOX DOOR FASTENER. . . .	4	1
- 46	95-410006-7	. . SUPPORT,BULKHEAD RH	1	1
	MS35489-19	. . GROMMET	1	1
- 47	95-410006-9	. . CHANNEL,BULKHEAD RH	1	1
	NAS680-1032	. . NUTPLATE.	3	1
		/ATTACHING PARTS/		
	NAS680-1032	. . NUTPLATE.	4	
	AN3-4A	. . BOLT.	4	
		——*——		
- 48	R 95-410006-81	. . HINGE HALF,BATTERY BOX DOOR FUSELAGE HALF .	1	1
- 49	95-410033-5	. . ANGLE,BAGGAGE WEBBING	1	1
- 50	96-420001-601	. . SUPPORT ASSY,LH RUDDER BELLCRANK.	1	2
	96-524026-1	. . SUPPORT,LH RUDDER BELLCRANK	1	5
	96-420001-602	. . SUPPORT ASSY,RH RUDDER BELLCRANK.	1	2
	96-524026-2	. . SUPPORT,RH RUDDER BELLCRANK	1	5
- 51	96-420001-11	. . CHANNEL ASSY,RUDDER PEDAL LH SUPPORT. . . .	1	8
	96-420001-167	. . CHANNEL ASSY,RUDDER PEDAL LH SUPPORT. . . .	1	9
	96-420001-12	. . CHANNEL ASSY,RUDDER PEDAL RH SUPPORT. . . .	1	8
	96-420001-168	. . CHANNEL ASSY,RUDDER PEDAL RH SUPPORT. . . .	1	9
	96-420301-13	. . . CHANNEL,LH SUPPORT.	1	8
	96-420001-165	. . . CHANNEL,LH SUPPORT.	1	9
	96-420001-14	. . . CHANNEL,RH SUPPORT.	1	8
	96-420001-166	. . . CHANNEL,RH SUPPORT.	1	9
- 52	35-400364-8	. . . SUPPORT ASSY,LH	1	2
	35-400364-12	. . . SUPPORT ASSY,RH	1	2
	35-400364-4	. . . . SUPPORT	2	1
	35-400364-6	. . . . BEARING,LH.	1	1
	8146	. . . . BEARING,RH.	1	1
- 53	95-410030-9	. . ANGLE,BULKHEAD ATTACH	2	1
- 54	35-400359-10	. . SUPPORT ASSY,MASTER CYLINDER LH	1	1
	35-400359-12	. . SUPPORT ASSY,MASTER CYLINDER RH	1	1
- 55	95-400005-622	. . SUPPORT ASSY,PULLEY BRACKET	1	1
	118540BHP4	. . . PULLEY.	8	1
		/ATTACHING PARTS/		
	AN4-43A	. . . BOLT.	1	
	AN960-416	. . . WASHER.	1	
	MS20365-428	. . . NUT	1	
		——*——		
- 56	96-420001-606	. . DOUBLER ASSY,ACCESS DOOR.	1	1
	95-110014-381	. . . DOUBLER	1	1
	22NA38-82BC	. . . NUTPLATE.	6	1
- 57	96-420001-103	. . STIFFENER,FUSELAGE BELLY.	1	1
	35-524309	. . FAIRLEAD.	1	1
- 58	96-524021-3	. . BRACKET	1	4
	96-524021-1	. . SUPPORT	1	4
	95-524018-609	. . PEDAL ASSY,LH RUDDER/SEE CHAPTER 27/. . . .	1	1
	95-524018-605	. . PEDAL ASSY,RH RUDDER/SEE CHAPTER 27/. . . .	1	1
	35-524136	. . SUPPORT,RUDDER BELLCRANK.	2	2
		/ATTACHING PARTS/		
	AN3-5A/M/	. . BOLT.	4	
	AN960-10	. . WASHER.	4	
	NAS680A3	. . NUTPLATE/SUPERSEDES AN366F1032/	4	
		——*——		

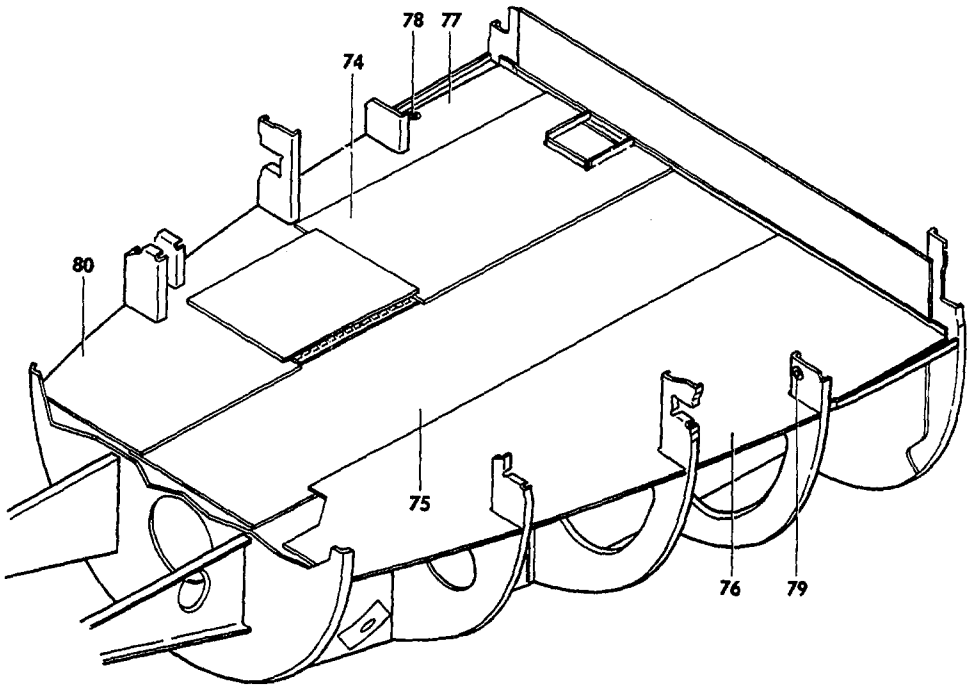

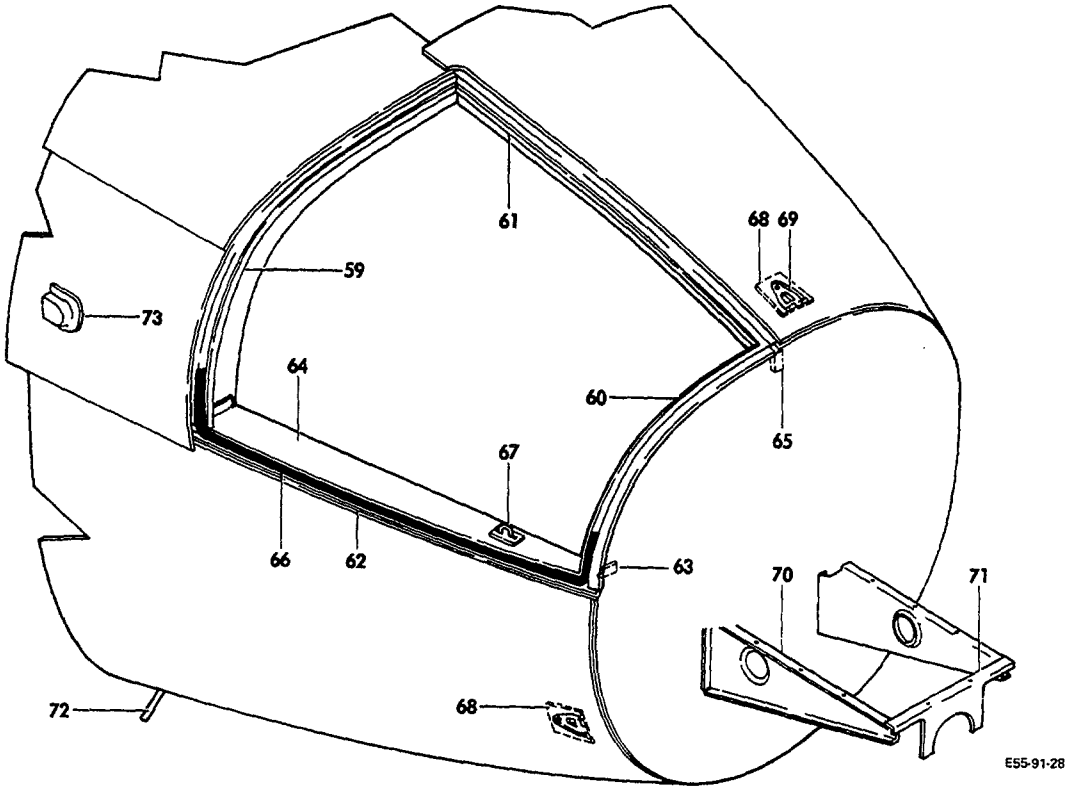

FIGURE 11-01.NOSE STRUCTURE
/SHEET 4 OF 5 SHEETS/

SUB-SECT UNIT & ITEM NO.	PART NO.	DESCRIPTION 1 2 3 4 5 6 7	UNITS PER ASSY	USABLE ON CODE
11-01 - 59	95-410005-37	RETAINER,DOOR SEAL AFT.	1	1
- 60	95-410005-39	RETAINER,DOOR SEAL FWD.	1	1
- 61	95-410005-41	RETAINER,DOOR SEAL UPPER.	1	1
- 62	95-410005-43	RETAINER,DOOR SEAL LOWER.	1	10
	95-410006-129	RETAINER,DOOR SEAL LOWER.	1	11
	95-410006-141	RETAINER,DOOR SEAL LOWER.	1	14
- 63	95-410005-45	ANGLE,LOWER FWD DOOR FRAME.	1	1
- 64	95-410005-47	LEDGE,DOOR LOWER.	1	10
	95-410006-113	LEDGE,DOOR LOWER.	1	11
	95-410006-143	LEDGE,DOOR LOWER.	1	14
- 65	95-410005-143	CLIP,UPPER FWD SEAL RETAINER.	1	1
- 66	95-410005-49	SEAL,BAGGAGE DOOR	1	10
	95-410006-117	SEAL,ASSY	1	4
- 67	95-410005-201	HOOK,BAGGAGE DOOR	1	10
	95-410206-115	HOOK,BAGGAGE DOOR	2	11
	95-410006-139	RETAINER ASSY,BAGGAGE DOOR LATCH.	2	14
		/ATTACHING PARTS/		
	AN960-10	WASHER.	2	
	MS20365-1032	NUT	2	
	AN316-4R	NUT	2	
	AN935-416	WASHER,LOCK	2	
	K3060-4	NUTPLATE.	2	
	AN525-10R9	SCREW	4	
	AN960-10	WASHER.	4	
	MS20365-1032	NUT	4	
		---*---		
- 68	414-184040-9	PLATE,NOSE CONE LATCH	3	1
- 69	99947P130	RECEPTACLE,NOSE CONE LATCH.	3	1
	295715	COVER,NOSE CONE LATCH RECEPTACLE.	3	1
	414-184040-9	PLATE,NOSE BAGGAGE DOOR LATCH	2	10
	99947P130	RECEPTACLE,NOSE BAGGAGE DOOR LATCH.	2	10
	295715	COVER,LATCH RECEPTACLE.	2	10
	95-410005-31	ANGLE,LATCH REINFORCEMENT	2	10
- 70	95-410030-139	SUPPORT,HEATER & RADIO SHELF LH	1	1
	95-410030-140	SUPPORT,HEATER & RADIO SHELF RH	1	1
- 71	95-410030-179	SUPPORT,HEATER & RADIO SHELF FWD.	1	1
- 72	95-410006-57	MAST ASSY,BATTERY DRAIN	1	1
		/ATTACHING PARTS/		
	NAS680-1032	NUTPLATE.	4	
	AN525-10R8	SCREW	4	
		---*---		
	95-410006-19	BOX ASSY,BATTERY/SEE CHAPTER 24/.	1	1
	95-410006-97	TUBE,BATTERY BOX VENT	1	1
	95-410006-83	TUBE,BATTERY BOX VENT	1	1
	MS35489-43	GROMMET,BATTERY BOX VENT TUBE	1	1
- 73	95-410005-191	COVER,BAGGAGE COMPARTMENT VENT HOLE	2	1
- 74	96-410031-3	WEB,BAGGAGE COMPARTMENT FLOOR RH.	1	1
- 75	96-410031-5	WEB,BAGGAGE COMPARTMENT FLOOR CENTER.	1	1
- 76	96-410031-7	WEB,BAGGAGE COMPARTMENT FLOOR LH.	1	1
- 77	96-410031-1	WEB,BAGGAGE COMPARTMENT FLOOR RH AFT.	1	1
- 78	MS35489-23	GROMMET	1	1
- 79	MS35489-19	GROMMET	1	1
- 80	95-410006-37	WEB,BAGGAGE COMPARTMENT FLOOR FWD RH.	1	1
	MS35489-19	GROMMET	1	1
	95-410024-1	DOOR ASSY,NOSE LANDING GEAR LH.	1	1
	R 96-410024-1	DOOR ASSY,NOSE LANDING GEAR RH.	1	1

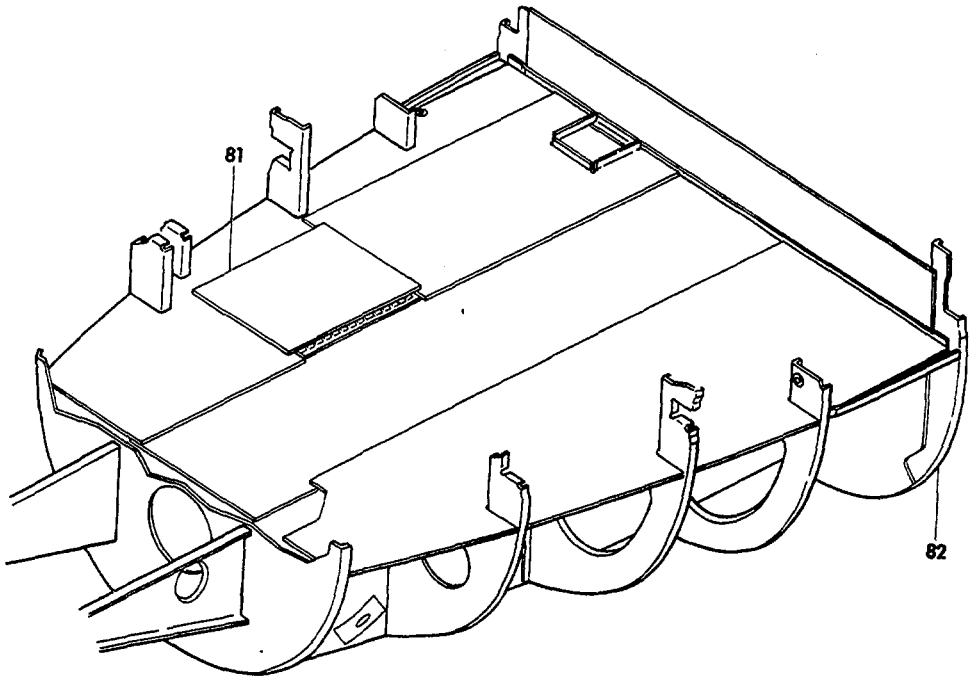

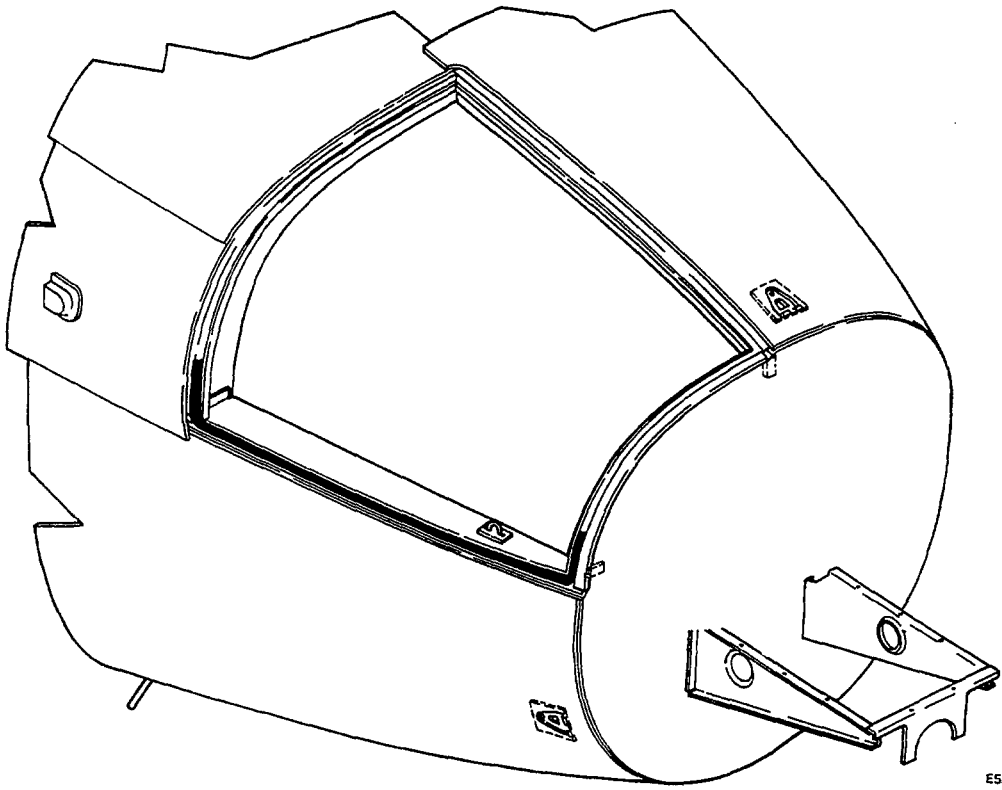

FIGURE 11-01.NOSE STRUCTURE
/SHEET 5 OF 5 SHEETS/

SUB-SECT UNIT & ITEM NO.	PART NO.	DESCRIPTION 1 2 3 4 5 6 7	UNITS PER ASSY	USABLE ON CODE
11-01 - 81	R 95-410006-603	. . LID ASSY,BATTERY BOX/STANDARD/.	1	1
	95-410006-601	. . LID ASSY,BATTERY BOX/OPTIONAL/.	1	1
	35-415330-82	. . CLAMP,BRAKE FLUID RESERVOIR	1	1
	95-410029-612	. . DOOR ASSY,NOSE BAGGAGE COMPARTMENT/SEE. . . CHAPTER 52-35-01/	1	10
	95-410029-613	. . DOOR ASSY,NOSE BAGGAGE COMPARTMENT/SEE. . . CHAPTER 52-35-02/	1	4
		/ATTACHING PARTS/		
	AN4-6A/M/	. . BOLT.	2	
	AN960-416L	. . WASHER.	2	
	MS20365-428	. . NUT	2	
		----*----		
- 82	96-410032-23	. . BULKHEAD,LOWER LH	1	1
	96-410032-24	. . BULKHEAD,LOWER RH	1	1

CODES OF EFFECTIVITY

1 TE-1 THRU TE-942 EXCEPT TE-938	2 TE-1 THRU TE-300
3 TE-301 THRU TE-451	4 TE-452 THRU TE-942 EXCEPT TE-938
5 TE-301 THRU TE-942 EXCEPT TE-938	6 TE-1 THRU TE-526
7 TE-527 THRU TE-942 EXCEPT TE-938	8 TE-1 THRU TE-366
9 TE-367 THRU TE-942 EXCEPT TE-938	10 TE-1 THRU TE-451
11 TE-452 THRU TE-557	12 TE-901 THRU TE-942 EXCEPT TE-938
13 TE-918 THRU TE-942 EXCEPT TE-938	14 TE-558 THRU TE-942 EXCEPT TE-938

"END"

53-12-01
KEEL ASSEMBLY
TE-1 THRU TE-942 EXCEPT TE-938
TC-1 THRU TC-1607

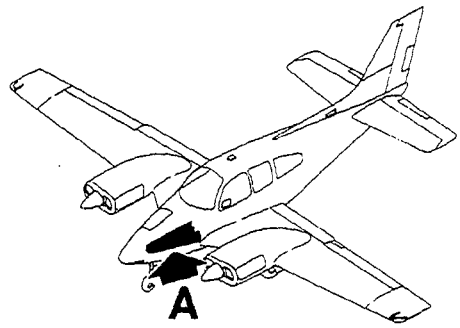

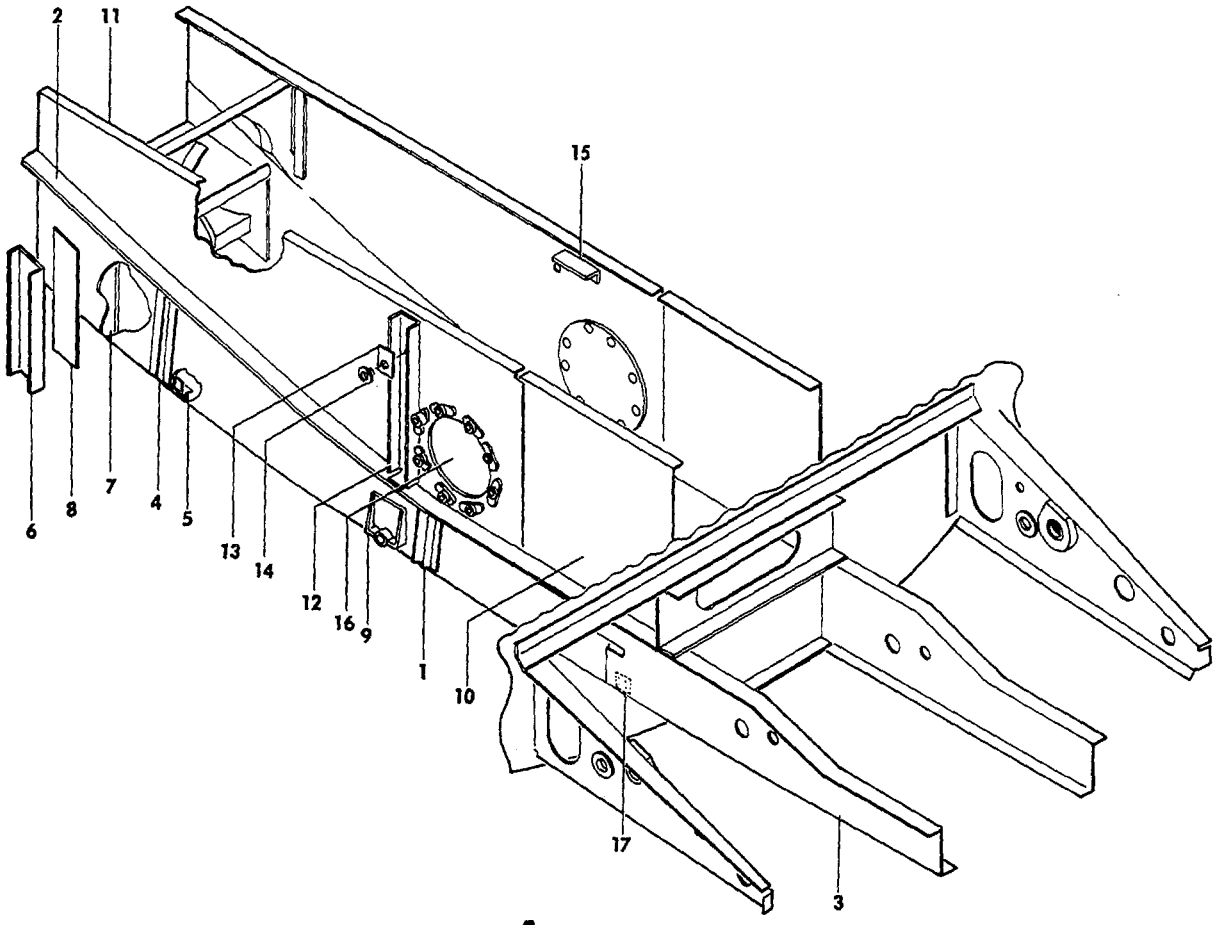

VIEW **A**

55-93-1

FIGURE 12-01.KEEL ASSY

SUB-SECT UNIT & ITEM NO.	PART NO.	DESCRIPTION 1 2 3 4 5 6 7	UNITS PER ASSY	USABLE ON CODE
12-01	95-410030-611	KEEL ASSY,LH.	1	1
	95-410030-612	KEEL ASSY,RH.	1	1
	96-410032-611	KEEL ASSY,LH.	1	2
	96-410032-612	KEEL ASSY,RH.	1	2
	96-410032-621	KEEL ASSY,LH.	1	3
	96-410032-622	KEEL ASSY,RH.	1	3
	95-410030-601	. KEEL ASSY,LH.	1	1
	95-410030-602	. KEEL ASSY,RH.	1	1
	96-410032-601	. KEEL ASSY,LH.	1	4
	96-410032-607	. KEEL ASSY,LH.	1	5
	96-410032-602	. KEEL ASSY,RH.	1	4
	96-410032-608	. KEEL ASSY,RH.	1	5
- 1	95-410030-93	. . ANGLE,AFT LANDING GEAR DOOR HINGE	4	
- 2	95-410030-41	. . KEEL,LH	1	1
	96-410032-11	. . KEEL,LH FWD	1	4
	96-410032-51	. . KEEL,LH FWD/USE AS SPARE REPLACEMENT FOR. 96-410032-11 KEEL/	1	5
	95-410030-42	. . KEEL,RH	1	1
	96-410032-12	. . KEEL,RH FWD	1	4
	96-410032-52	. . KEEL,RH FWD/USE AS SPARE REPLACEMENT FOR. 96-410032-12 KEEL/	1	5
- 3	96-410032-13	. . KEEL,LH AFT	1	6
	96-410032-14	. . KEEL,RH AFT	1	6
- 4	95-410030-45	. . ANGLE,FWD LANDING GEAR DOOR HINGE	2	
- 5	95-410030-47	. . DOUBLER,LH L.G.DOOR FWD HINGE CUTOUT.	1	
	95-410030-48	. . DOUBLER,RH L.G.DOOR FWD HINGE CUTOUT.	1	
- 6	K 002-410066-13	. . CHANNEL,NOSE GEAR HINGE POINT LH.	1	
	K 002-410066-14	. . CHANNEL,NOSE GEAR HINGE POINT RH.	1	
- 7	95-410030-51	. . PLATE,NOSE GEAR STRAIGHTENER.	2	
- 8	95-410030-61	. . DOUBLER,NOSE GEAR HINGE POINT CHANNEL	2	
- 9	35-400504-3	. . FITTING,DRAG LEG HINGE POINT.	2	
	NAS686A3	. . NUTPLATE.	2	
- 10	96-410032-3	. PANEL,LH NOSE WHEEL WELL AFT.	1	6
	96-410032-4	. PANEL,RH NOSE WHEEL WELL AFT.	1	6
- 11	95-410030-43	. PANEL,LH.	1	1
	96-410032-9	. PANEL,LH NOSE WHEEL WELL FWD.	1	6
	95-410030-115	. PANEL,RH.	1	1
	96-410032-10	. PANEL,RH NOSE WHEEL WELL FWD.	1	6
- 12	95-410030-59	. CHANNEL,LH.	1	
	95-410030-60	. CHANNEL,RH.	1	
	45-410455-1	. PLATE ASSY,NOSE GEAR ACTUATOR SHAFT LH.	1	
	45-410455-2	. PLATE ASSY,NOSE GEAR ACTUATOR SHAFT RH.	1	
- 13	45-410455-3	. . PLATE,LH.	1	
	45-410455-4	. . PLATE,RH.	1	
- 14	NAS77A9-12	. . BUSHING	2	
- 15	95-410030-57	. ANGLE,RH.	1	
	95-410030-105	. DOUBLER,ACCESS DOOR	2	1
- 16	95-410030-107	. DOOR,ACCESS	2	
		/ATTACHING PARTS/		
	AN515-8R6	. SCREW	8	
	AN960-8	. WASHER.	8	
	AN356F832	. NUTPLATE.	8	
		----*----		
- 17	96-410032-5	BULKHEAD,LOWER.	1	4

CODES OF EFFECTIVITY

1	TC-1 THRU TC-1607	2	TE-1 THRU TE-451
3	TE-452 THRU TE-942 EXCEPT TE-938	4	TE-1 THRU TE-300
5	TE-301 THRU TE-942 EXCEPT TE-938	6	TE-1 THRU TE-942 EXCEPT TE-938

53-13-01
FIREWALL ASSY

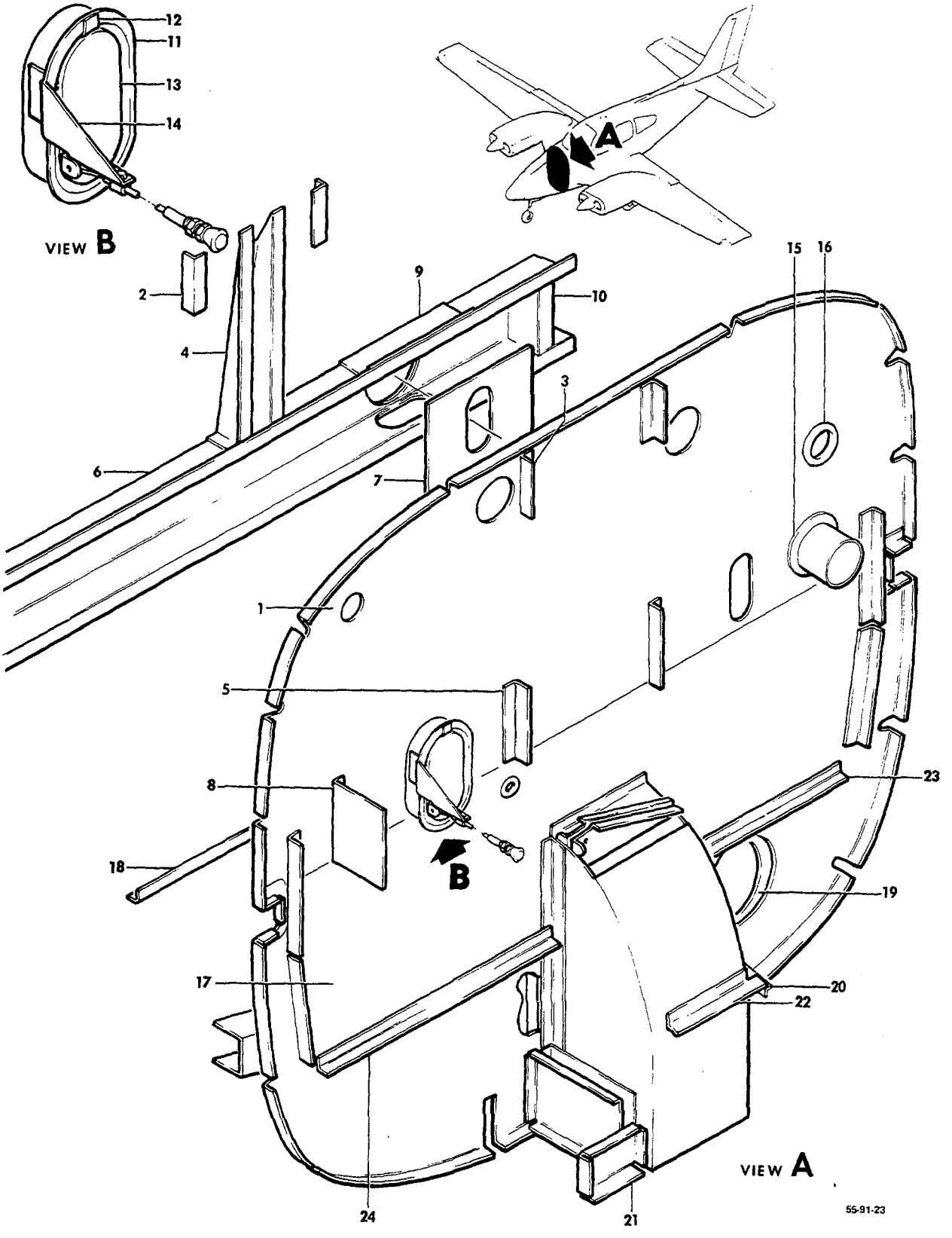

FIGURE 13-01.FIREWALL ASSY
/SHEET 1 OF 2 SHEETS/

ATA CODE & INDEX NO.	PART NO.	DESCRIPTION 1 2 3 4 5 6 7	UNITS PER ASSY	USABLE ON CODE
13-01	95-410030-11	FIREWALL ASSY,UPPER	1	1
	95-410030-620	FIREWALL ASSY,UPPER	1	2
	95-410030-626	FIREWALL ASSY,UPPER	1	3
	96-410032-615	FIREWALL ASSY,UPPER	1	4
	96-410032-625	FIREWALL ASSY,UPPER	1	5
- 1	95-410030-5	. WEB,UPPER FIREWALL.	1	1
	95-410030-191	. WEB,UPPER FIREWALL.	1	6
	95-410030-205	. WEB,UPPER FIREWALL.	1	7
	96-410032-107	. WEB,UPPER FIREWALL/SUPERSEDES 96-410032-17/	1	8
- 2	95-410030-132	. ANGLE,LH.	1	
	95-410030-131	. ANGLE,RH.	1	
- 3	95-410030-134	. ANGLE,LH.	1	
	95-410030-133	. ANGLE,RH.	1	
- 4	95-410030-13	. CHANNEL	1	
- 5	35-415330-64	. ANGLE,LH.	1	9
	35-415330-65	. ANGLE,RH.	1	9
	95-324006-61	. ANGLE,LH.	1	10
	95-324006-62	. ANGLE,RH.	1	10
- 6	95-410030-7	. CHANNEL	1	9
	95-410030-189	. CHANNEL	1	10
- 7	95-410030-185	. INSULATOR SHEET	1	
- 8	95-410030-167	. ANGLE,SUPPORT NAV FLASHER	1	11
- 9	95-410030-187	. DOUBLER	1	10
- 10	95-550002-47	. PLUG,CHANNEL.	2	
- 11	35-550024-4	. FRAME,LH.	1	
	35-550024-5	. FRAME,RH.	1	
- 12	35-550036	. SPRING.	2	
- 13	35-550097-3	. DOOR ASSY,LH AIR VENT	1	
	35-550097-4	. DOOR ASSY,RH AIR VENT	1	
- 14	35-550096-3	. BRACKET,LH CONTROL CABLE ATTACHING.	1	
	35-550096-4	. BRACKET,RH CONTROL CABLE ATTACHING.	1	
- 15	95-550002-51	. COLLAR,AIR VENT	1	
- 16	AN931-24S28	. GROMMET	1	
	95-410030-604	FIREWALL ASSY,LOWER	1	1
	95-410030-622	FIREWALL ASSY,LOWER	1	12
	96-410032-604	FIREWALL ASSY,LOWER	1	8
- 17	95-410030-603	. SPOTWELD ASSY,LOWER	1	1
	95-410030-621	. SPOTWELD ASSY,LOWER	1	12
	95-410030-69	. . COVER,WHEEL WELL.	1	13
	95-410030-3	. . WEB	1	9
	95-410030-193	. . WEB	1	14
	95-410030-67	. . PANEL,LH.	1	13
	95-410030-71	. . PANEL,RH.	1	13
	95-410030-73	. . DOUBLER	1	13
- 18	95-410030-15	. ANGLE,LOWER BULKHEAD UPPER SUPPORT.	1	
- 19	95-410030-91	. RETAINER,HEAT DUCT SEAL	1	15
	95-410030-135	. RETAINER,HEAT DUCT SEAL	1	16
	95-410030-87	. SEAL,HEAT DUCT.	1	15
	95-410030-137	. SEAL,HEAT DUCT.	1	16
	95-410030-79	. ANGLE	1	15
- 20	95-410030-101	. ANGLE	1	13
- 21	35-400339-2	. BRACKET ASSY,AILERON CABLE.	1	13
- 22	35-415330-12	. ANGLE	1	13
- 23	35-415330-30	. ANGLE,RH.	1	13
- 24	35-415330-40	. ANGLE,LH.	1	13
	96-410032-25	. ANGLE,LOWER BULKHEAD SUPPORT.	1	8
- 25		. DELETED		

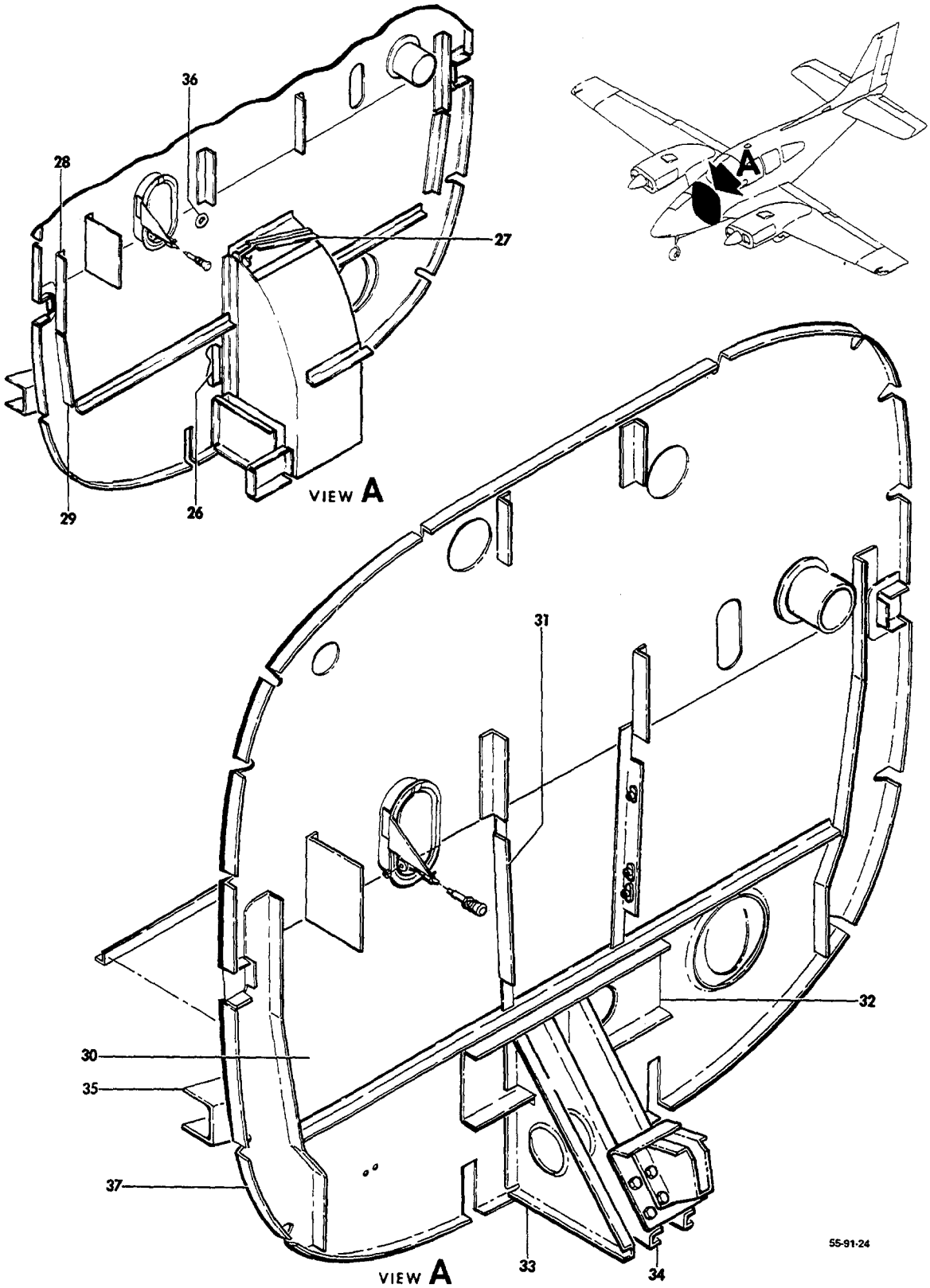

FIGURE 13-01.FIREWALL ASSY
/SHEET 2 OF 2 SHEETS/

ATA CODE & INDEX NO.	PART NO.	DESCRIPTION 1 2 3 4 5 6 7	UNITS PER ASSY	USABLE ON CODE
13-01 - 26	35-415330-66	. ANGLE	1	13
- 27	35-415332-2	. BRACKET,FWD	1	13
	35-415332-4	. BRACKET,AFT	1	13
	35-415332-6	. GUSSET	1	13
	95-324006-19	. ANGLE,CONSOLE ATTACH	1	13
	95-324006-21	. ANGLE,CONSOLE ATTACH	1	13
- 28	95-410030-97	. ANGLE,LH	1	13
	95-410030-98	. ANGLE,RH	1	13
- 29	95-410030-99	. ANGLE,LH	1	13
	95-410030-100	. ANGLE,RH	1	13
- 30	96-410032-21	. WEB,LOWER FIREWALL	1	8
- 31	96-410032-27	. ANGLE,CONSOLE SUPPORT LH	1	8
	96-410032-28	. ANGLE,CONSOLE SUPPORT RH	1	8
- 32	96-410032-19	. CHANNEL,LOWER BULKHEAD	1	8
- 33	96-410032-31	. BRACKET,PULLEY LH	1	8
- 34	58-524021	. BRACKET ASSY,PULLEY RH	1	8
	58-524021-1	. . BRACKET	1	8
	22NA21-22-02BC	. . NUTPLATE	3	8
- 35	96-410069	. CHANNEL,REINFORCEMENT	1	17
	SS51043	. PLUG,BUTTON	1	
- 36	AN931-4-12	. GROMMET	1	
- 37	96-410032-23	. BULKHEAD,LOWER LH	1	8
	96-410032-24	. BULKHEAD,LOWER RH	1	8

CODES OF EFFECTIVITY

1 TC-1 THRU TC-954
2 TC-955 THRU TC-1410
3 TC-1411 THRU TC-1607
4 TE-1 THRU TE-859
5 TE-860 THRU TE-942 EXCEPT TE-938
6 TC-955 THRU TC-1413
7 TC-1414 THRU TC-1607
8 TE-1 THRU TE-942 EXCEPT TE-938
9 TC-1 THRU TC-954 EXCEPT TC-350
10 TC-350 AND TC-955 THRU TC-1607 TE-1 THRU TE-942 EXCEPT TE-938
11 TC-531 THRU TC-1607 TE-1 THRU TE-942 EXCEPT TE-938
12 TC-955 THRU TC-1607
13 TC-1 THRU TC-1607
14 TC-350 AND TC-955 THRU TC-1607
15 TC-1 THRU TC-260
16 TC-261 THRU TC-1607 TE-1 THRU TE-942 EXCEPT TE-938
17 TC-350 AND TC-502 THRU TC-1607 TE-301 THRU TE-942 EXCEPT TE-938

"END"

53-14-01
CABIN SIDE STRUCTURE
TC-1 THRU TC-1607 EXCEPT TC-350

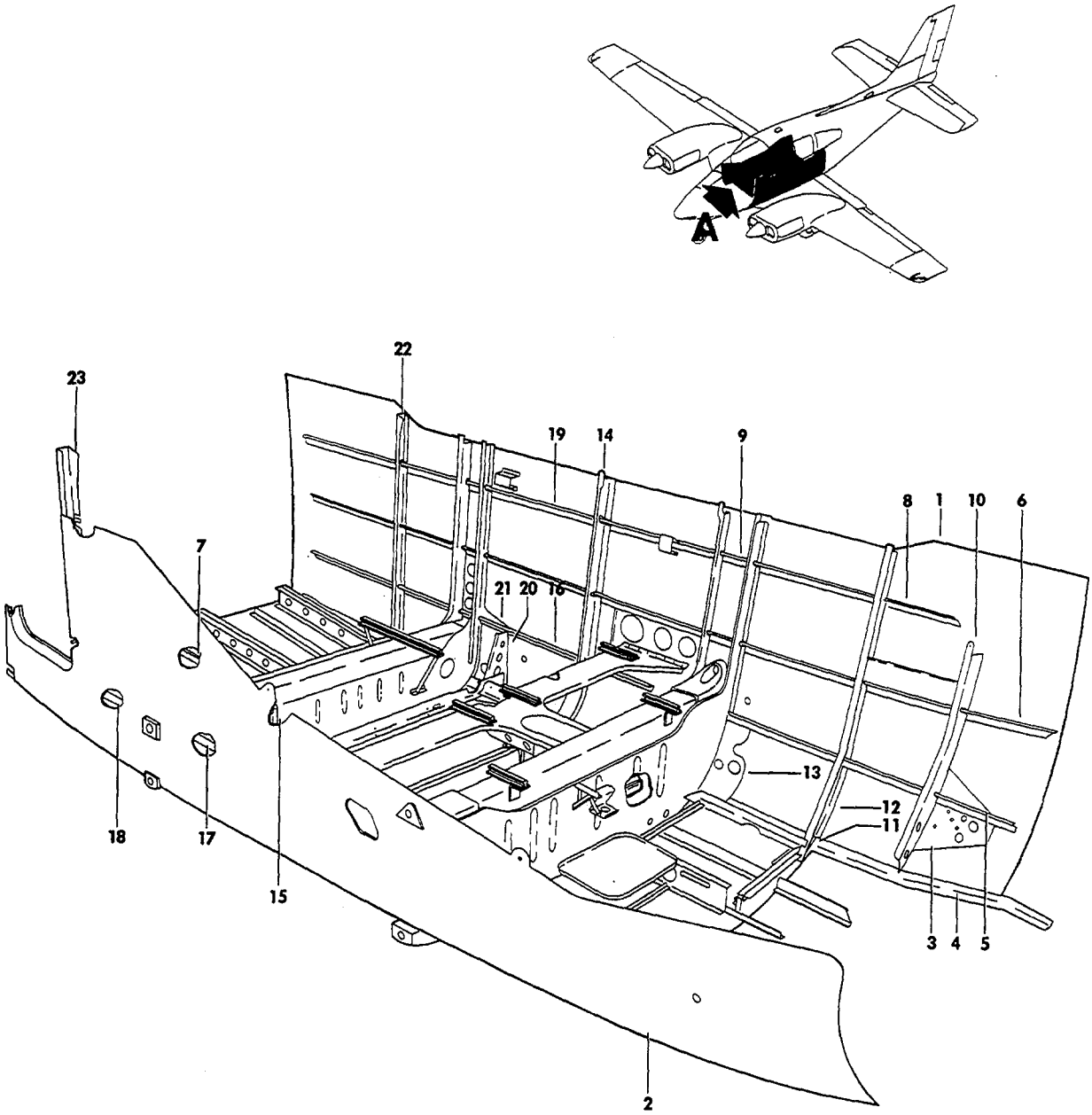

VIEW A

B5S-98-13

FIGURE 14-01.CABIN SIDE STRUCTURE
/SHEET 1 OF 2 SHEETS/

SUB-SECT UNIT & ITEM NO.	PART NO.	DESCRIPTION 1 2 3 4 5 6 7	UNITS PER ASSY	USABLE ON CODE
14-01	R 95-400006-638	CABIN LOWER SECTION	1	2
	96-400000-638	CABIN LOWER SECTION	1	3
	95-400006-632	. PANEL ASSY,CABIN SIDE LH.	1	2
	96-400000-632	. PANEL ASSY,CABIN SIDE LH.	1	3
	95-400006-633	. PANEL ASSY,CABIN SIDE RH.	1	2
	96-400000-633	. PANEL ASSY,CABIN SIDE RH.	1	3
- 1	95-420011-65	. . SKIN,LH LOWER CABIN SIDE.	1	1
- 2	95-420011-79	. . SKIN,RH LOWER CABIN SIDE.	1	1
- 3	95-420011-137	. . DOUBLER,LH.	1	1
	95-420011-138	. . DOUBLER,RH.	1	1
- 4	35-410000-24	. . STRINGER,LH/FWD I/.	1	1
	35-410000-25	. . STRINGER,RH/FWD I/.	1	1
- 5	35-410000-30	. . STRINGER,LH/FWD H/.	1	1
	35-410000-31	. . STRINGER,RH/FWD H/.	1	1
- 6	95-420011-51	. . STRINGER,LH/G/.	1	1
- 7	35-410000-15	. . STRINGER,RH/G/.	1	1
- 8	96-420001-225	. . SRINGER,LH/FWD F/	1	1
- 9	96-420133-1	. . ZEE,LH/MID F/	1	1
- 10	35-420011-123	. . FRAME,LH BHD/STA 58/.	1	1
	35-420015-5	. . FRAME,RH BHD/STA 58/.	1	1
	96-420000-612	. . BULKHEAD ASSY,/STA 68/.	1	1
- 11	35-410210-24	. . . ANGLE,LH.	1	1
	35-410210-25	. . . ANGLE,RH.	1	1
	95-420011-175	. . . FRAME,LH BHD/STA 68/.	1	4
- 12	95-420015-171	. . . FRAME,LH BHD/STA 68/.	1	5
	95-420011-177	. . . FRAME,RH BHD/STA 68/.	1	1
		NOTE FOR BALANCE OF BHD ASSY'S STA 68,100&131 SEE CABIN BOTTOM ASSY CHAPTER 53-15-01.		
- 13	35-410217-18	. . GUSSET,LH FRONT SPAR CARRY THRU	1	1
	35-410217-16	. . GUSSET,RH FRONT SPAR CARRY THRU	1	1
	95-420015-143	. . BULKHEAD ASSY/STA 100/.	1	1
- 14	35-410170-2	. . . FRAME,LH BHD/STA 100/	1	1
- 15	35-410170-4	. . . FRAME,RH BHD/STA 100/	1	1
- 16	35-410000-8	. . STRINGER,LH/AFT H/.	1	1
- 17	35-410000-11	. . STRINGER,RH/AFT H/.	1	1
- 18	35-410000-38	. . STRINGER,RH/AFT H/.	1	1
- 19	96-420001-227	. . STRINGER,LH/AFT F/.	1	1
	35-410444-19	. . STRINGER,RH/AFT F/.	1	1
- 20	35-410225-2	. . FORMER,LH	1	1
	35-410225-3	. . FORMER,RH	1	1
- 21	35-410158-10	. . GUSSET,LH REAR SPAR CARRY THRU.	1	1
	35-410158-11	. . GUSSET,RH REAR SPAR CARRY THRU.	1	1
	95-420015-35	. . BULKHEAD ASSY/STA 131/.	1	1
- 22	95-420015-21	. . . FRAME,LH BHD/STA 131/	1	1
- 23	35-410180-6	. . . FRAME,RH BHD/STA 131/	1	1
	35-410180-12	. . . GUSSET,LH	1	1
	35-410180-14	. . . REINFORCEMENT,RH.	1	1
	35-410180-8	. . . CLIP.	2	1

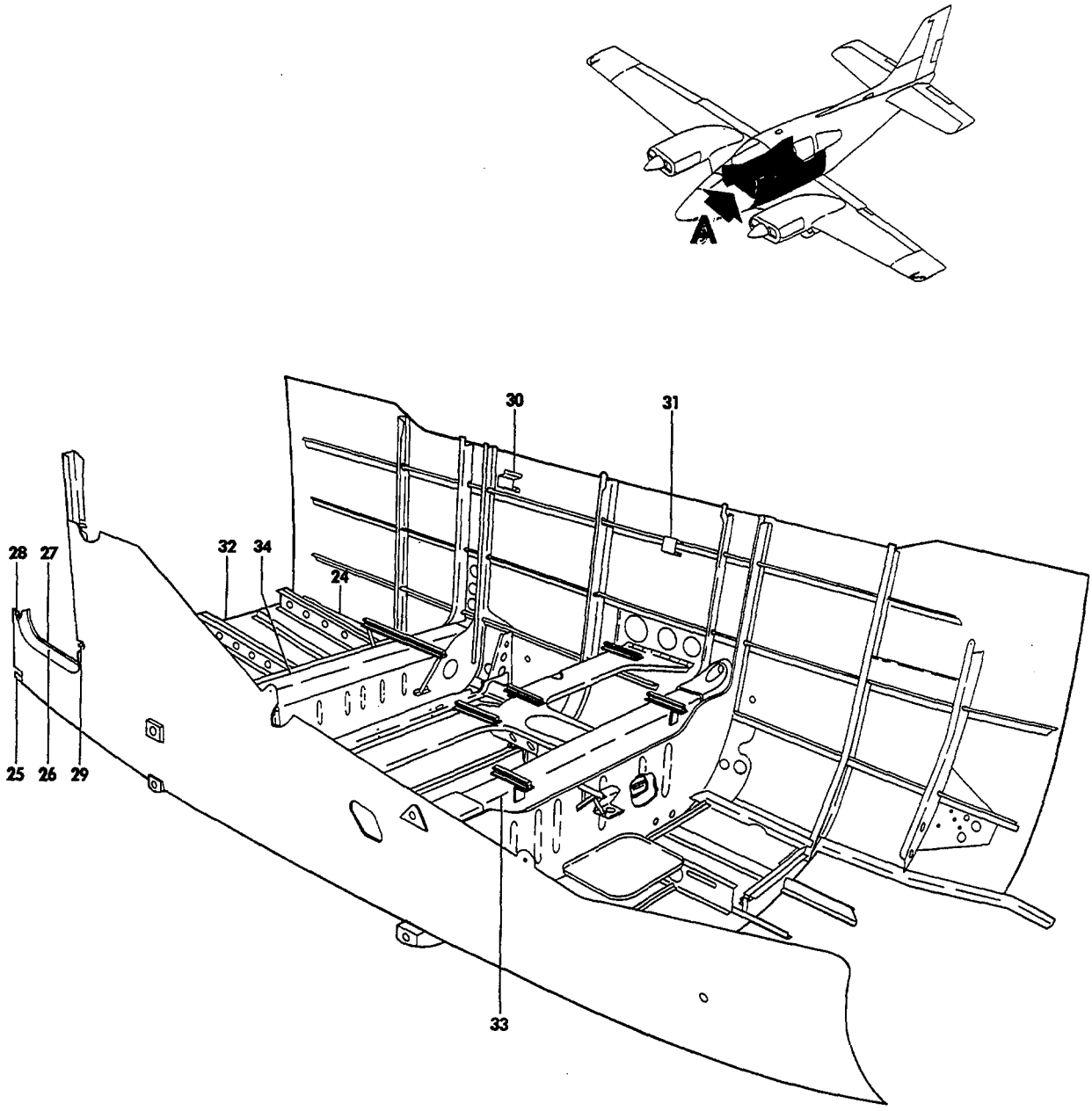

VIEW A

B55-98-14

FIGURE 14-01.CABIN SIDE STRUCTURE
/SHEET 2 OF 2 SHEETS/

SUB-SECT UNIT & ITEM NO.	PART NO.	DESCRIPTION 1 2 3 4 5 6 7	UNITS PER ASSY	USABLE ON CODE
14-01 - 24	95-420011-95	. . STRINGER,LH/AFT 1/.	1	1
- 25	95-420015-69	. . STRINGER,RH/AFT 1/.	1	1
	35-410070-18	. . CHANNEL ASSY/RH ONLY/	1	1
- 26	35-410070-22	. . . ANGLE	1	1
- 27	35-410070-20	. . . ANGE.	1	1
- 28	35-410070-24	. . . FILLER.	1	8
- 29	35-410070-26	. . . BLOCK,FILLER.	1	8
- 30	33-534024-19	. . BRACKET ASSY,RH ARMREST	1	1
	35-534413-23	. . BRACKET ASSY,LH ARMREST	1	2
- 31	35-534413-45	. . BRACKET ASSY,LH ARMREST	1	3
	R 95-400006-634	. BOTTOM ASSY,CABIN	1	2
- 32	96-400000-634	. BOTTOM ASSY,CABIN	1	3
	95-420017-601	. SPAR CARRY THRU ASSY,FRONT.	1	6
		SEE CHAPTER 53-17-01		
- 33	002-430013-53	. SPAR CARRY THRU ASSY,FRONT.	1	7
		SEE CHAPTER 53-17-02/		
	95-420016-601	. SPAR CARRY THRU ASSY,REAR	1	6
		SEE CHAPTER 53-17-50		
- 34	002-430026-5	. SPAR CARRY THRU ASSY,REAR	1	7
		SEE CHAPTER 53-17-52		

CODES OF EFFECTIVITY

1	TC-1 THRU TC-1607 EXCEPT TC-350	2	TC-1 THRU TC-954 EXCEPT TC-350
3	TC-954 THRU TC-1607	4	TC-1 THRU TC-190
5	TC-191 THRU TC-1607 EXCEPT TC-350	6	TC-1 THRU TC-1525 EXCEPT TC-1471
7	TC-1526 THRU TC-1607 & TC-1471	8	TC-1 THRU TC-461 EXCEPT TC-350

53-14-50
CABIN SIDE STRUCTURE
TC-350 & TE-1 THRU TE-942 EXCEPT TE-938

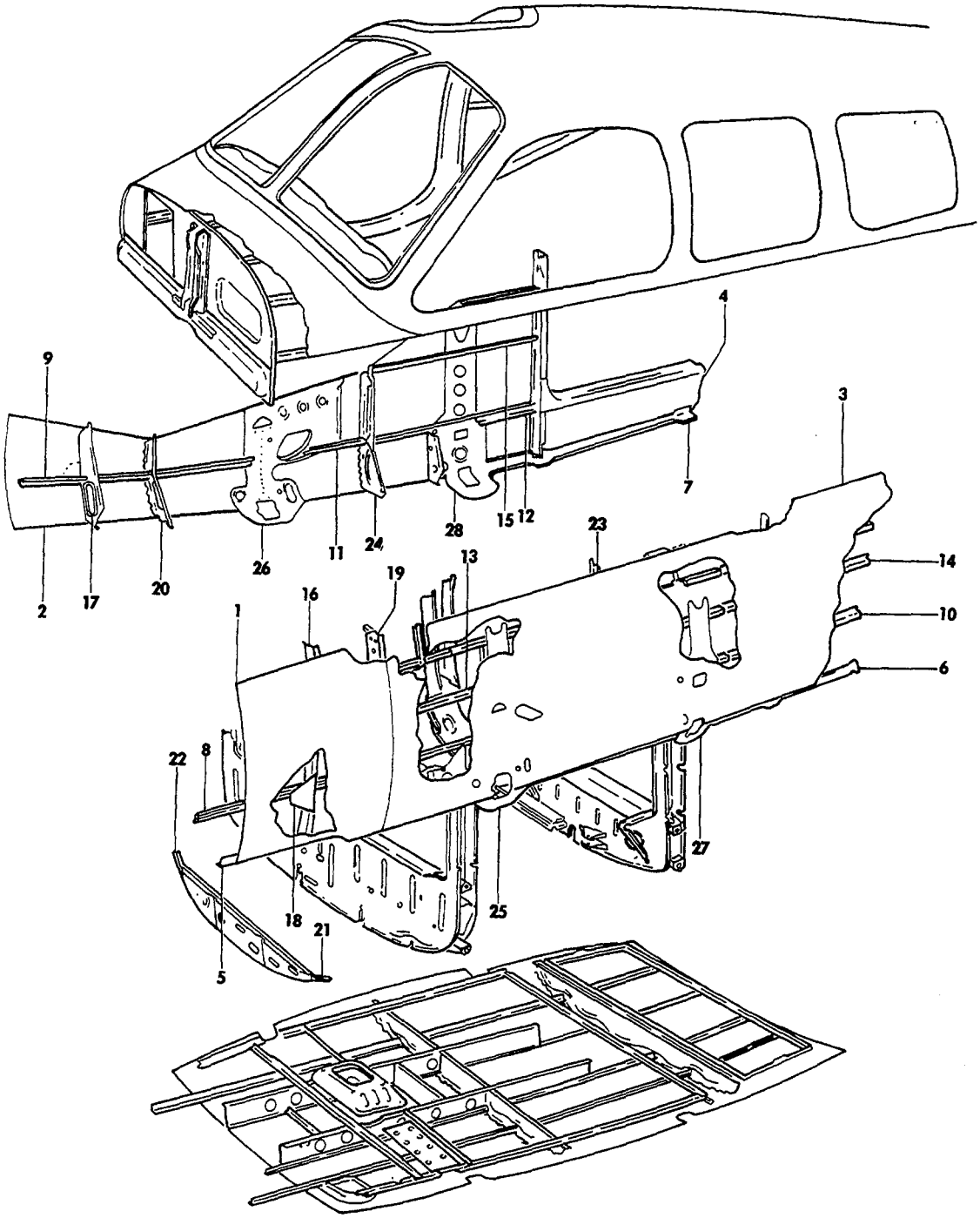

FIGURE 14-50.CABIN SIDE STRUCTURE
/SHEET 1 OF 2 SHEETS/

ATA CODE & INDEX NO.	PART NO.	DESCRIPTION 1 2 3 4 5 6 7	UNITS PER ASSY	USABLE ON CODE
14-50	96-420001-1	STRUCTURE ASSY,CABIN/STANDARD BAGGAGE DOOR/ . .	NP	2
	96-420001-3	STRUCTURE ASSY,CABIN/UTILITY BAGGAGE DOOR/. . .	NP	2
	96-420001-127	STRUCTURE ASSY,CABIN/STANDARD BAGGAGE DOOR/ . .	NP	3
	96-420001-189	STRUCTURE ASSY,CABIN/UTILITY BAGGAGE DOOR/. . .	NP	3
- 1	96-420001-65	. SKIN,LH FWD	1	1
- 2	96-420001-79	. SKIN,RH FWD	1	1
	96-420001-61	. SKIN,LH AFT	1	4
- 3	96-420001-207	. SKIN,LH AFT	1	5
	96-420001-77	. SKIN,RH AFT	1	4
	96-420001-209	. SKIN,RH AFT	1	6
- 4	96-420001-233	. SKIN,RH AFT	1	7
- 5	96-420001-43	. STRINGER,LH FWD/I/.	1	1
	96-420001-44	. STRINGER,RH FWD/I/.	1	1
	35-410000-36	. STRINGER,LH MID/I/.	1	5
	35-410000-37	. STRINGER,RH MID/I/.	1	5
	35-420035-1	. STRINGER,LH MID/I/.	1	6
	35-420035-3	. STRINGER,RH MID/I/.	1	6
- 6	95-420011-95	. STRINGER,LH AFT/I/.	1	1
- 7	95-420015-69	. STRINGER,RH AFT/I/.	1	1
- 8	96-420001-41	. STRINGER,LH FWD/H/.	1	1
- 9	96-420001-42	. STRINGER,RH FWD/H/.	1	1
- 10	35-410000-8	. STRINGER,LH AFT/H/.	1	1
	35-410000-11	. STRINGER,RH AFT/H/.	1	15
- 11	35-410000-125	. STRINGER,RH AFT/H/.	1	16
- 12	35-410000-38	. STRINGER,RH/H/F.S.120 TO 130.	1	1
- 13	96-420001-39	. STRINGER,LH,FWD/G/.	1	1
- 14	96-420001-38	. STRINGER,LH AFT/G/.	1	1
- 15	35-410000-15	. STRINGER,RH/G/.	1	1
- 16	96-420001-15	. FRAME,LH BHD/F.S.58/.	1	1
- 17	96-420001-17	. FRAME,RH BHD/F.S.58/.	1	1
- 18	96-420001-105	. DOUBLER,LH & RH/F.S.58/	2	1
	96-420017	. BULKHEAD ASSY/F.S.68/	1	8
	96-420017-7	. BULKHEAD ASSY/F.S.68/	1	9
	96-420017-1	. . FRAME,LH BHD/F.S.68/.	1	8
- 19	58-420027-15	. . FRAME,LH BHD/F.S.68/.	1	9
- 20	96-420017-3	. . FRAME,RH BHD/F.S.58/.	1	1
- 21	35-410210-24	. . ANGLE,LH.	1	9
- 22	35-410210-25	. . ANGLE,RH.	1	9
	95-420015-143	. BULKHEAD ASSY/F.S.100/.	1	1
- 23	35-410170-1	. . FRAME,LH BHD/F.S.100/	1	10
	35-410170-2	. . FRAME,LH BHD/F.S.100/	1	11
- 24	35-410170-4	. . FRAME,RH BHD/F.S.100/	1	1
		NOTE FOR BALANCE OF BULKHEAD ASSEMBLIES SEE CABIN BOTTOM ASSY CHAPTER 57-15-01		
- 25	36-400026-1	. DOUBLER,FRONT SPAR CARRY THRU/LH/	1	1
- 26	36-400026-3	. DOUBLER,FRONT SPAR CARRY THRU/RH/	1	1
- 27	35-410158-11	. DOUBLER,REAR SPAR CARRY THRU/LH/.	1	1
- 28	35-410158-12	. DOUBLER,REAR SPAR CARRY THRU/RH/.	1	1

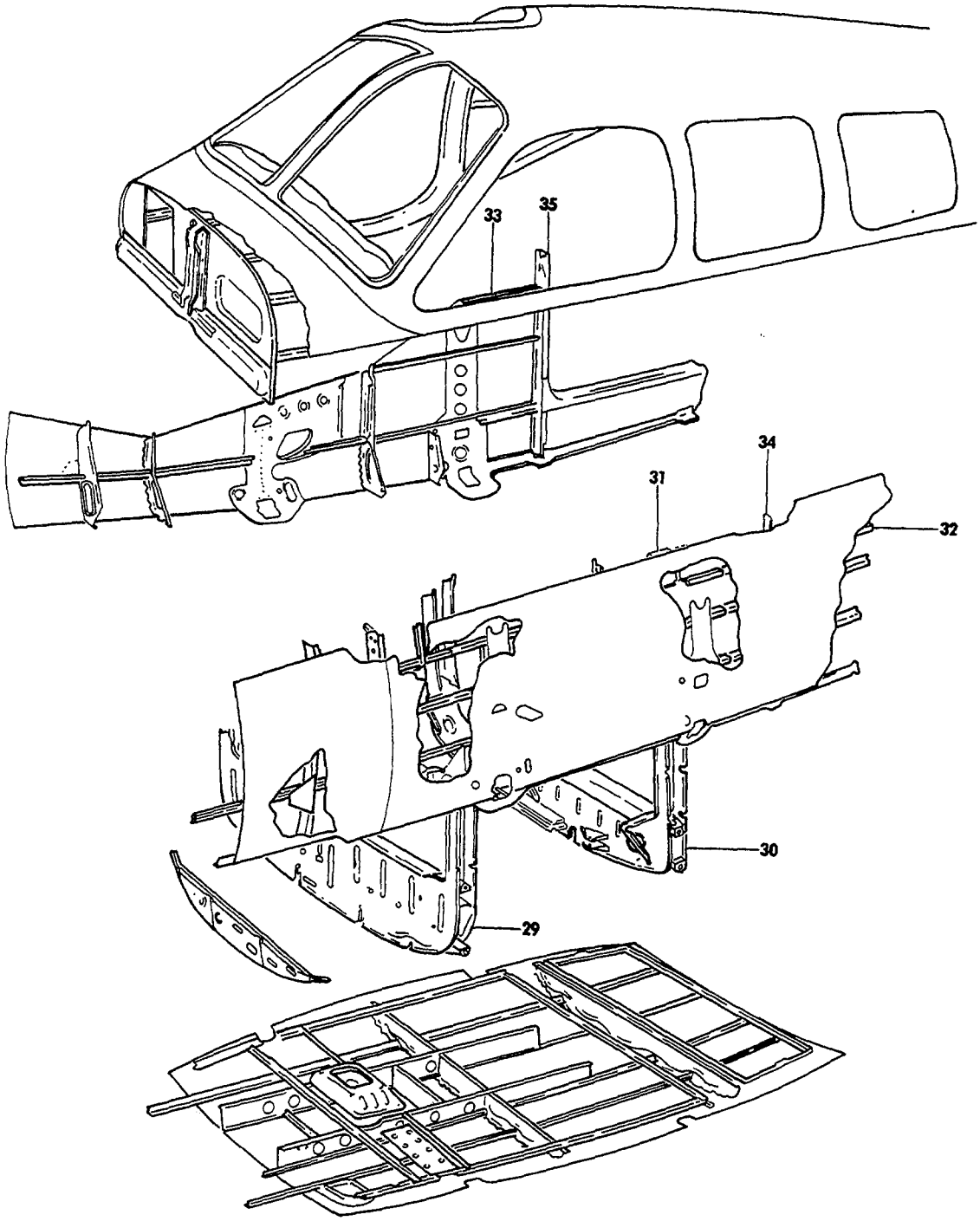

FIGURE 14-50.CABIN SIDE STRUCTURE
/SHEET 2 OF 2 SHEETS/

SUB-SECT UNIT & ITEM NO.	PART NO.	DESCRIPTION 1 2 3 4 5 6 7	UNITS PER ASSY	USABLE ON CODE
14-50	95-420017-15	. FRONT SPAR CARRY THRU/SEE CHAPTER 53-17-01/ .	1	2
	95-420017-23	. FRONT SPAR CARRY THRU/SEE CHAPTER 53-17-01/ .	1	12
- 29	002-043004-3	. FRONT SPAR CARRY THRU/SEE CHAPTER 53-17-02/ .	1	13
R	95-420016-601	. REAR SPAR CARRY THRU/SEE CHAPTER 53-17-50/. .	1	14
- 30	002-430026-5	. REAR SPAR CARRY THRU/SEE CHAPTER 53-17-52/. .	1	13
- 31	33-534024-19	. BRACKET,RH ARMREST.	1	1
	35-534413-45	. BRACKET,LH ARMREST.	1	1
- 32	35-410000-90	. STRINGER,LH/F/.	1	1
- 33	35-410444-19	. STRINGER,RH/F/.	1	1
	95-420011-145	. ANGLE,LH/F.S.131 TO 150 G STG/	1	1
	35-410198-1	. ANGLE,CLIP/F I & G STG/LH	3	1
	95-420015-35	. BULKHEAD ASSY/F.S.131/.	1	1
	95-420015-27	. . FRAME,LH BHD/F.S.131/	1	10
- 34	002-430012-7	. . FRAME,LH BHD/F.S.131/	1	11
- 35	35-410180-6	. . FRAME,RH BHD/F.S.131/	1	1
	35-410180-8	. . CLIP.	2	1
	35-410180-12	. . GUSSET,LH/F.S.131/.	1	1
	35-410180-14	. . REINFORCEMENT,RH.	1	1

CODES OF EFFECTIVITY

1	TC-350 & TE-1 THRU TE-942 EXCEPT TE-938	2	TE-1 THRU TE-451 & TC-350
3	TE-452 THRU TE-942 EXCEPT TE-938	4	TE-1 THRU TE-730 & TC-350
5	TE-732 THRU TE-942 EXCEPT TE-938	6	TE-731 THRU TE-885
7	TE-886 THRU TE-942 EXCEPT TE-938	8	TE-1 THRU TE-767 & TC-350
9	TE-768 THRU TE-942 EXCEPT TC-350	10	TE-1 THRU TE-846 & TC-350
11	TE-897 THRU TE-942 EXCEPT TE-938	12	TE-452 THRU TE-896
13	TE-897 THRU TE-942 EXCEPT TE-938	14	TE-1 THRU TE-896 & TC-350
15	TE-1 THRU TE-885 & TC-350	16	TE-886 THRU TE-942 EXCEPT TE-938

"END"

53-15-01
CABIN BOTTOM PANEL

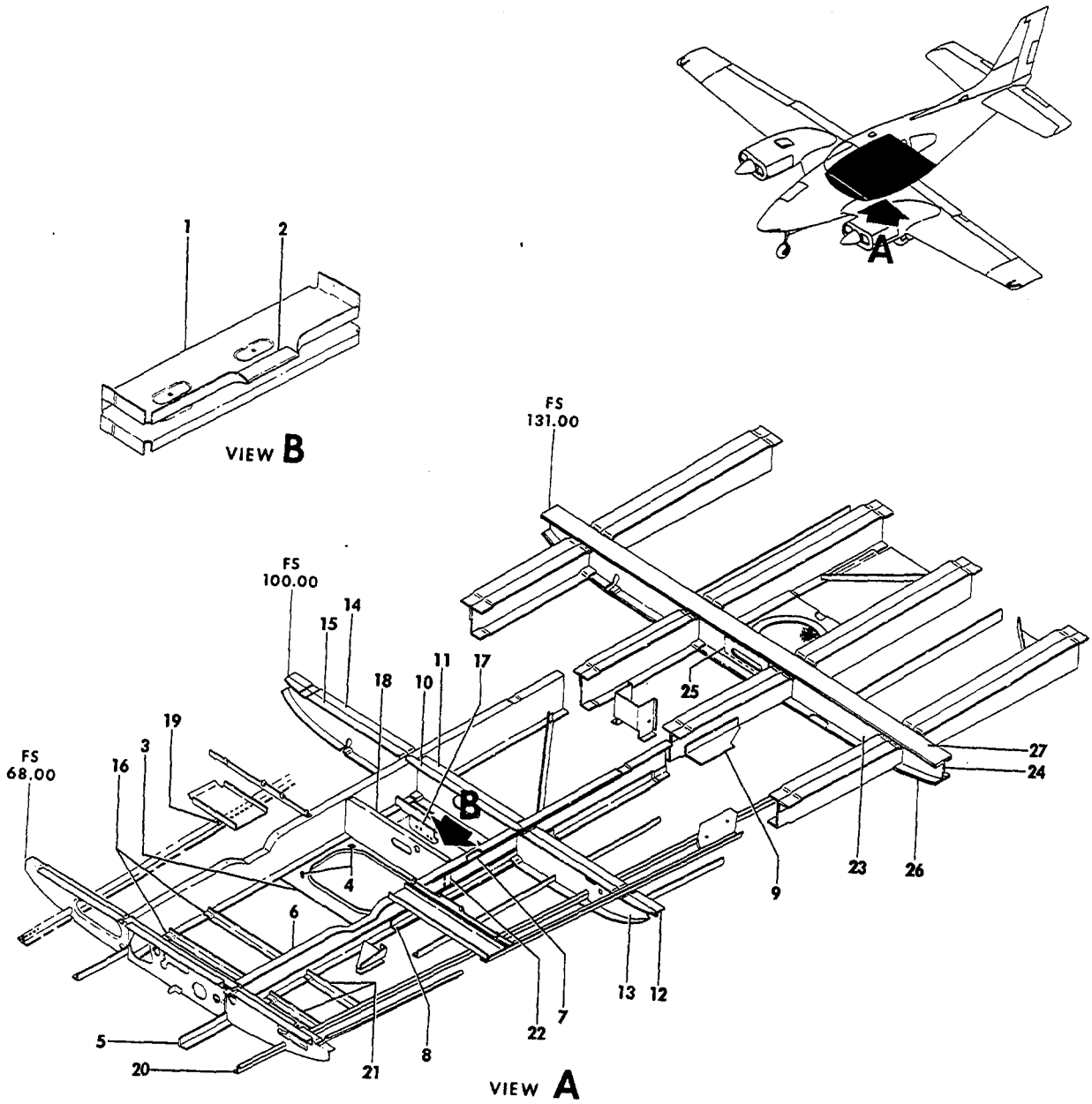

55-99-8

FIGURE 15-01.CABIN BOTTOM PANEL
/SHEET 1 OF 3 SHEETS/

ATA CODE & INDEX NO.	PART NO.	DESCRIPTION 1 2 3 4 5 6 7	UNITS PER ASSY	USABLE ON CODE
15-01	96-420001-1	STRUCTURE ASSY,CABIN/WITHOUT UTILITY. . . . . BAGGAGE DOOR/	NP	1
	96-420001-3	STRUCTURE ASSY,CABIN/WITH UTILITY BAGGAGE DOOR/	NP	1
	96-420001-187	STRUCTURE ASSY,CABIN/WITHOUT UTILITY BAG.DOOR/.	NP	2
	96-420001-189	STRUCTURE ASSY,CABIN/WITH UTILITY BAGGAGE DOOR/	NP	2
	96-420000	STRUCTURE ASSY,CABIN.	1	3
	96-420000-17	STRUCTURE ASSY,CABIN/WITH UTILITY BAG.DOOR/ . .	1	4
	96-420000-19	STRUCTURE ASSY,CABIN/WITH AFT BAG.COMPARTMENT/.	1	5
	96-420000-21	STRUCTURE ASSY,CABIN/WITH AFT BAG.COMPT. AND. . UTILITY BAGGAGE DOOR/	1	5
	35-410259-43	. SUPPORT INSTL,LANDING GEAR ACTUATOR	NP	
	35-410259-604	. . BRACKET ASSY,LANDING GEAR ACTUATOR SUPPORT.	1	
- 1	35-410259-22	. . . BRACKET	1	
- 2	35-410278	. . . FAIRLEAD.	1	
	MS21047L4	. . . NUTPLATE.	2	
	MS20392-IC23	. . . PIN	1	
	MS24665-132	. . . PIN,COTTER.	1	
	35-410259-18	. . DOUBLER ASSY,LANDING GEAR ACTUATOR.	1	
- 3	35-410259-14	. . . DOUBLER	1	
- 4	98-2MS	. . . SPRING.	4	
	95-420015-154	. KEEL ASSY,LH.	1	
	95-420015-155	. KEEL ASSY,RH.	1	
	35-410330-602	. . KEEL ASSY,LH.	1	
	35-410330-603	. . KEEL ASSY,RH.	1	
- 5	35-410330-6	. . . ANGLE,LH.	1	
	35-410330-7	. . . ANGLE,RH.	1	
- 6	35-410330-2	. . . KEEL,LH	1	
	35-410330-5	. . . KEEL,RH	1	
- 7	35-410330-10	. . . ANGLE,LH.	1	
- 8	35-410330-12	. . . ANGLE,LH LOWER.	1	
- 9	95-420015-15	. . CHANNEL,LH.	1	
	96-420015-16	. . CHANNEL,RH.	1	
	95-420011-604	. CHANNEL ASSY.	1	
- 10	95-420011-27	. . CHANNEL	1	
- 11	35-415374-12	. . ANGLE	1	
	95-420011-605	. CHANNEL ASSY.	1	
- 12	35-415374-14	. . ANGLE	1	
- 13	95-420011-75	. . CHANNEL	1	
	35-415374-606	. CHANNEL ASSY.	1	
- 14	35-410170-16	. . ANGLE	1	
- 15	35-415374-16	. . CHANNEL	1	
- 16	35-410444-21	. STIFFENER	2	
	95-420011-9	. CHANNEL ASSY.	1	
- 17	95-420011-7	. . FAIRLEAD.	1	
- 18	95-420011-71	. . CHANNEL	1	
	95-420011-616	. ANGLE ASSY.	1	
- 19	95-420011-187	. . ANGLE	1	
	MS21047L3	. . NUTPLATE.	1	
- 20	95-420015-43	. STRINGER,LH/J/.	1	
	95-420015-45	. STRINGER,RH/J/.	1	
- 21	35-410000-122	. STIFFENER,LH.	2	
	35-410000-123	. STIFFENER,RH.	2	
- 22	35-410259-30	. ANGLE	1	
	22A5-048	. NUTPLATE.	2	
	95-420015-601	. BULKHEAD ASSY/STA 131/.	1	
- 23	95-420015-27	. . CHANNEL	1	
- 24	95-420015-25	. . CHANNEL	1	
- 25	95-420015-33	. . FAIRLEAD.	1	
- 26	95-420015-29	. . PLATE	1	6
- 27	95-420015-77	. . PLATE	1	

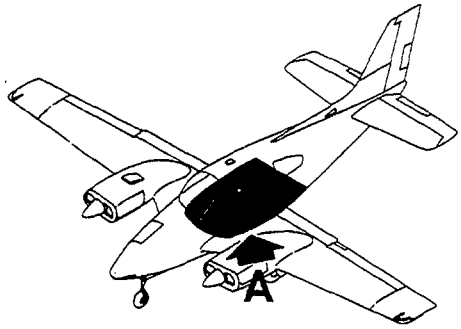

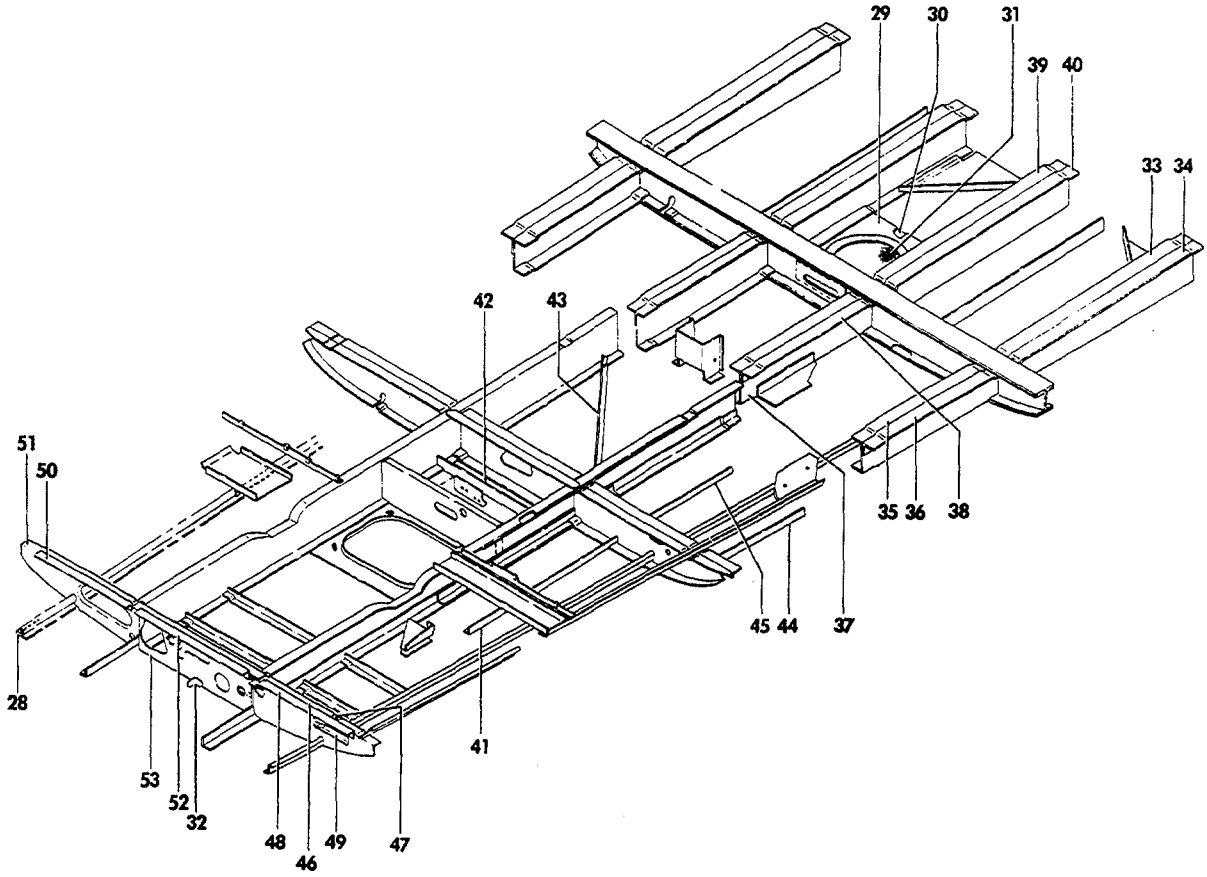

55-99-9

FIGURE 15-01.CABIN BOTTOM PANEL
/SHEET 2 OF 3 SHEETS/

ATA CODE & INDEX NO.	PART NO.	DESCRIPTION 1 2 3 4 5 6 7	UNITS PER ASSY	USABLE ON CODE
15-01 - 28	95-420015-151	. DOUBLER	1	
- 29	95-420015-57	. DOUBLER,VENT.	1	
- 30	95-420015-19	. VENT.	1	
- 31	50-554106	. SCREEN,AIR INLET.	1	
- 32	108424-4	. CLIP.	1	
	95-420015-31	. CHANNEL ASSY,LH	1	
- 33	95-420015-13	. . CHANNEL,LH.	1	
- 34	95-420015-7	. . ANGLE,LH.	1	
	95-420015-32	. CHANNEL ASSY,RH	1	
	95-420015-14	. . CHANNEL,RH.	1	
	95-420015-8	. . ANGLE,RH.	1	
	95-420015-51	. CHANNEL ASSY,LH	1	
- 35	95-420015-11	. . CHANNEL,LH.	1	
- 36	95-420015-5	. . ANGLE,LH.	1	
	95-420015-52	. CHANNEL ASSY,RH	1	
	95-420015-12	. . CHANNEL,RH.	1	
	95-420015-6	. . ANGLE,RH.	1	
	95-420015-47	. CHANNEL ASSY,LH	1	
- 37	95-420015-1	. . CHANNEL,LH.	1	
- 38	95-420015-5	. . ANGLE,LH.	1	
	95-420015-48	. CHANNEL ASSY,RH	1	
	95-420015-2	. . CHANNEL,RH.	1	
	95-420015-6	. . ANGLE,RH.	1	
	95-420015-49	. CHANNEL ASSY,LH	1	
- 39	95-420015-3	. . CHANNEL,LH.	1	
- 40	95-420015-7	. . ANGLE,LH.	1	
	95-420015-50	. CHANNEL ASSY,RH	1	
	95-420015-4	. . CHANNEL,RH.	1	
	95-420015-8	. . ANGLE,RH.	1	
- 41	35-400471-13	. STIFFENER	1	
- 42	35-400471-15	. STIFFENER	1	
- 43	35-400471-17	. STIFFENER	1	
- 44	35-400471-19	. STIFFENER	2	
- 45	35-400471-29	. STIFFENER	1	
	96-420017-601	. BULKHEAD ASSY,LOWER LH/STA 68/.	1	
- 46	96-420017-5	. . FRAME	1	
- 47	96-420000-3	. . PLATE	1	
- 48	96-420000-7	. . STIFFENER	1	
- 49	95-420011-151	. . BRACKET,PULLEY.	1	
	96-420017-602	. BULKHEAD ASSY,LOWER RH/STA 68/.	1	
- 50	35-410210-12	. . ANGLE	1	
- 51	96-420017-6	. . FRAME	1	
	96-420000-603	. FRAME ASSY,LOWER/STA 68/.	1	
- 52	95-420011-3	. . FRAME	1	
- 53	35-415373-14	. . STIFFENER	1	

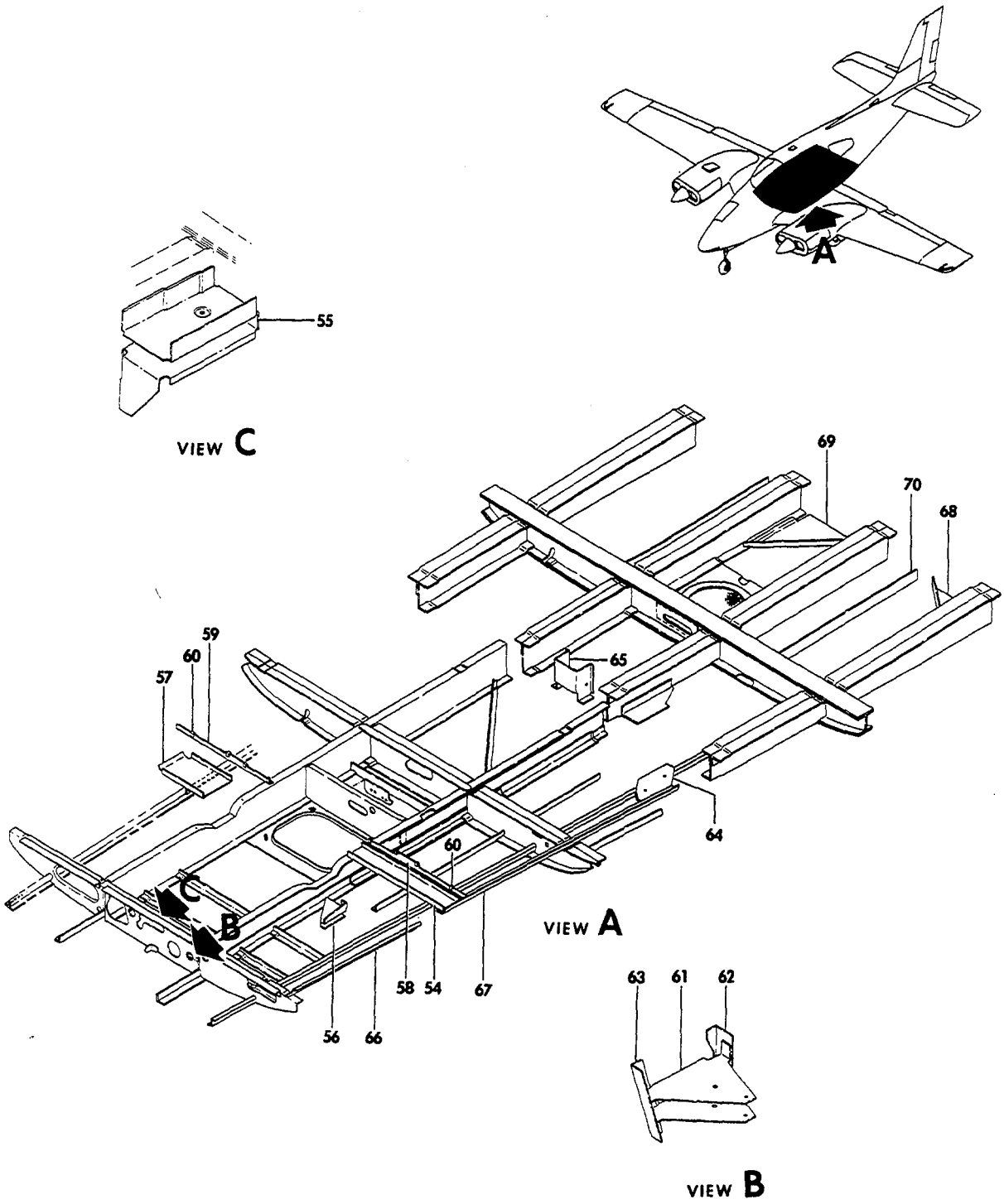

FIGURE 15-01.CABIN BOTTOM PANEL
/SHEET 3 OF 3 SHEETS/

SUB-SECT UNIT & ITEM NO.	PART NO.	DESCRIPTION 1 2 3 4 5 6 7	UNITS PER ASSY	USABLE ON CODE
15-01	95-420011-13	. CHANNEL	1	7
	R 96-420123-1	. BRACKET INSTL,LIGHT DIMMING TRANSISTOR.	NP	8
- 54	96-420123-3	. . BRACKET ASSY.	1	8
	96-420123-5	. . . BRACKET	1	8
	NAS680A06	. . . NUTPLATE.	12	8
- 55	95-524000-55	. BRACKET,PULLEY.	1	
- 56	95-524000-5	. BRACKET,PULLEY.	1	
	95-420011-615	. CHANNEL ASSY.	1	
- 57	95-420011-185	. . CHANNEL	1	
	AN366F1032	. . NUTPLATE.	2	
	95-420011-187	. . ANGLE	1	
	35-410279	. ANGLE ASSY,LH	1	
	35-410279-1	. ANGLE ASSY,RH	1	
- 58	35-410279-2	. . ANGLE,LH.	1	
- 59	35-410279-3	. . ANGLE,RH.	1	
- 60	A1784-621	. . NUTPLATE.	5	
- 61	95-524000-29	. BRACKET,PULLEY.	1	
- 62	95-524000-39	. SUPPORT,PULLEY BRACKET.	1	
- 63	95-524000-41	. SUPPORT,PULLEY BRACKET.	1	
- 64	95-524000-3	. BRACKET,PULLEY.	1	
- 65	95-524000-1	. BRACKET,PULLEY.	1	
- 66	95-420011-87	. SUPPORT,LH.	1	
	95-420011-194	. SUPPORT,RH.	1	
- 67	95-420011-191	. SUPPORT,LH.	1	
	95-420011-192	. SUPPORT,RH.	1	
- 68	95-534022-99	. PLATE,LH.	1	7
	95-534022-100	. PLATE,RH.	1	7
- 69	95-534022-41	. PLATE	1	7
- 70	35-400471-25	. STIFFENER	2	2

CODES OF EFFECTIVITY

1	TC-350,TE-1 THRU TE-451	2	TE-452 THRU TE-942 EXCEPT TE-938
3	TC-1 THRU TC-1042 EXCEPT TC-350	4	TC-393 THRU TC-1042
5	TC-1043 THRU TC-1607	6	TC-350,TE-1 THRU TE-889
7	TC-350,TE-1 THRU TE-767	8	TE-768 THRU TE-942 EXCEPT TE-938

53-16-50
CABIN CANOPY
TC-1 THRU TC-1402 EXCEPT TC-350

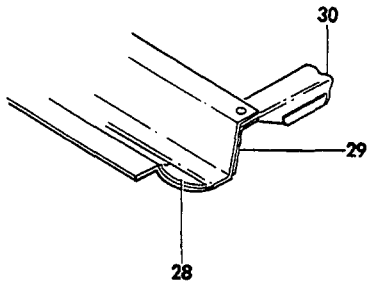

VIEW A

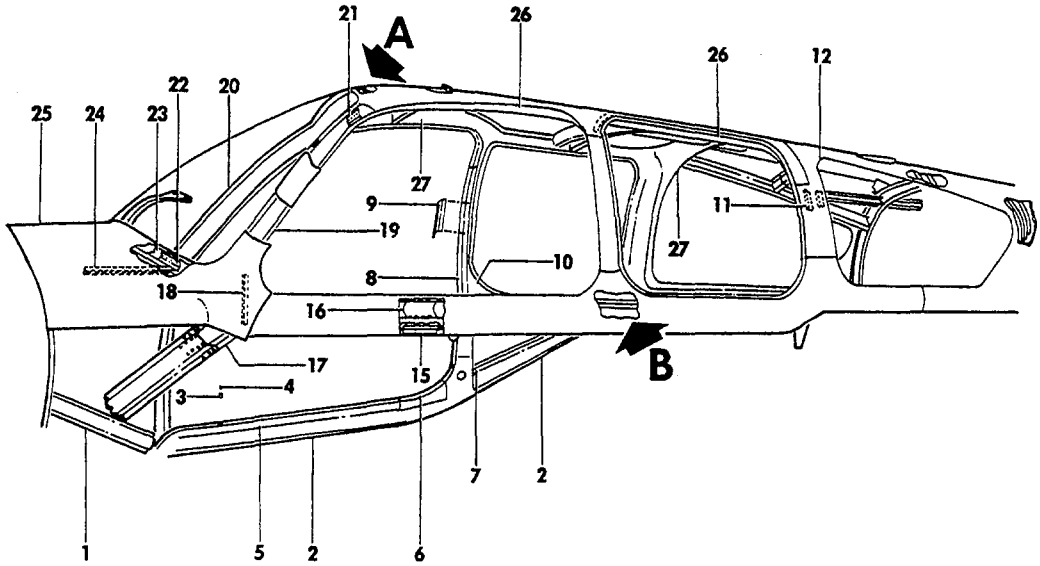

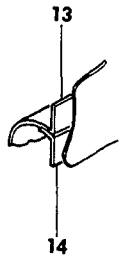

VIEW B

55-97-10

FIGURE 16-50.CABIN CANOPY
SHEET 1 OF 3 SHEETS

ATA CODE & INDEX NO.	PART NO.	DESCRIPTION 1 2 3 4 5 6 7	UNITS PER ASSY	USABLE ON CODE
16-50	95-400006-636	CANOPY ASSEMBLY,CABIN	1	2
	95-400006-681	CANOPY ASSEMBLY,CABIN	1	3
	96-400000-681	CANOPY ASSEMBLY,CABIN	1	4
	95-420011-608	. LONGERON ASSY,RH FWD.	1	1
- 1	95-420011-39	. . LONGERON.	1	1
	35-410176	. . BRACKET	1	1
- 2	95-420015-99	. LONGERON,RH AFT	1	1
- 3	35-410177	. MOUNT	1	1
- 4	35-410287	. BUSHING	1	1
- 5	35-410038-102	. ANGLE	1	1
- 6	35-410038-106	. ANGLE	1	1
- 7	35-410038-74	. CLIP.	1	1
- 8	35-410038-110	. SECTION,CABIN DOOR.	1	1
- 9	35-400322	. PLATE,STRICKER.	1	1
	35-410038-632	. SECTION ASSY,RH SIDE HAT.	1	1
- 10	35-410038-98	. . SECTION,HAT	1	1
	35-410038-32	. SPLICE,HAT SECTION RH/STA 106/.	1	1
	35-410038-8	. SPLICE,HAT SECTION LH/STA 106/.	1	1
- 11	35-410038-10	. SPLICE,HAT SECTION/STA 132/	2	1
- 12	35-410038-12	. SPLICE,HAT SECTION/STA 132/	2	1
	95-420015-609	. LONGERON ASSY,LH AFT.	1	1
- 13	95-420015-97	. . LONGERON.	1	1
	35-410180-12	. . GUSSET.	1	1
- 14	95-420011-69	. STIFFENER,LH.	1	1
- 15	35-410038-70	. SPLICE,LH LONGERON.	1	1
- 16	35-410038-72	. SPLICE,LH LONGERON.	1	1
	95-420011-610	. PAN ASSY,CANOPY LH FWD.	1	1
- 17	95-420011-41	. . LONGERON,LH FWD	1	1
	49296	. CLIP,LH	1	1
- 18	35-410038-52	. ANGLE,LH.	1	1
- 19	35-410038-173	. SECTION,LH WINDSHIELD HAT	1	1
- 20	35-410038-175	. SECTION,RH WINDSHIELD	1	1
- 21	35-410038-4	. SPLICE,LH HAT SECTION/WINDSHIELD/	1	1
	35-410038-34	. SPLICE,RH HAT SECTION/WINDSHIELD/	1	1
	35-410038-64	. SPLICE,LH HAT SECTION/WINDSHIELD LWR/	1	5
- 22	35-410038-177	. SPLICE,LH HAT SECTION/WINDSHIELD LWR/	1	4
	35-410038-65	. SPLICE,RH HAT SECTION/WINDSHIELD LWR/	1	5
	35-410038-179	. SPLICE,RH HAT SECTION/WINDSHIELD LWR/	1	4
	35-410038-634	. SUPPORT ASSY,WINDSHIELD LWR	1	5
- 23	35-410038-62	. . CHANNEL,SUPPORT	1	5
	35-410038-189	. . SPLICE,WINDSHIELD SUPPORT	1	4
- 24	35-410473-31	. STRINGER,LH	1	1
	35-410473-32	. STRINGER,RH	1	1
- 25	95-530000-33	. WRAPPER,COWL.	1	1
	PK79XZ6-6	. SCREW,COWL WRAPPER ATTACH	40	1
	35-410038-602	. SECTION ASSY,CANOPY LH UPPER HAT.	1	1
- 26	35-410038-6	. . SECTION,LH UPPER HAT.	1	1
	35-410038-604	. SECTION ASSY,CANOPY RH UPPER HAT.	1	1
- 27	35-410038-90	. . SECTION,RH UPPER HAT.	1	1
	96-420054	. . SUPPORT,UPPER DOOR LATCH.	1	1
- 28	35-410038-22	. SPLICE,UPPER HAT SECTION.	1	1
- 29	35-410038-24	. SPLICE,UPPER HAT SECTION.	1	1
- 30	35-410038-154	. STRINGER,LH	1	1
	35-410038-155	. STRINGER,RH	1	1
	35-550561	. SUPPORT	1	5
	95-420011-195	. CLIP,LH STRINGER.	1	6
	95-420011-196	. CLIP,RH STRINGER.	1	6

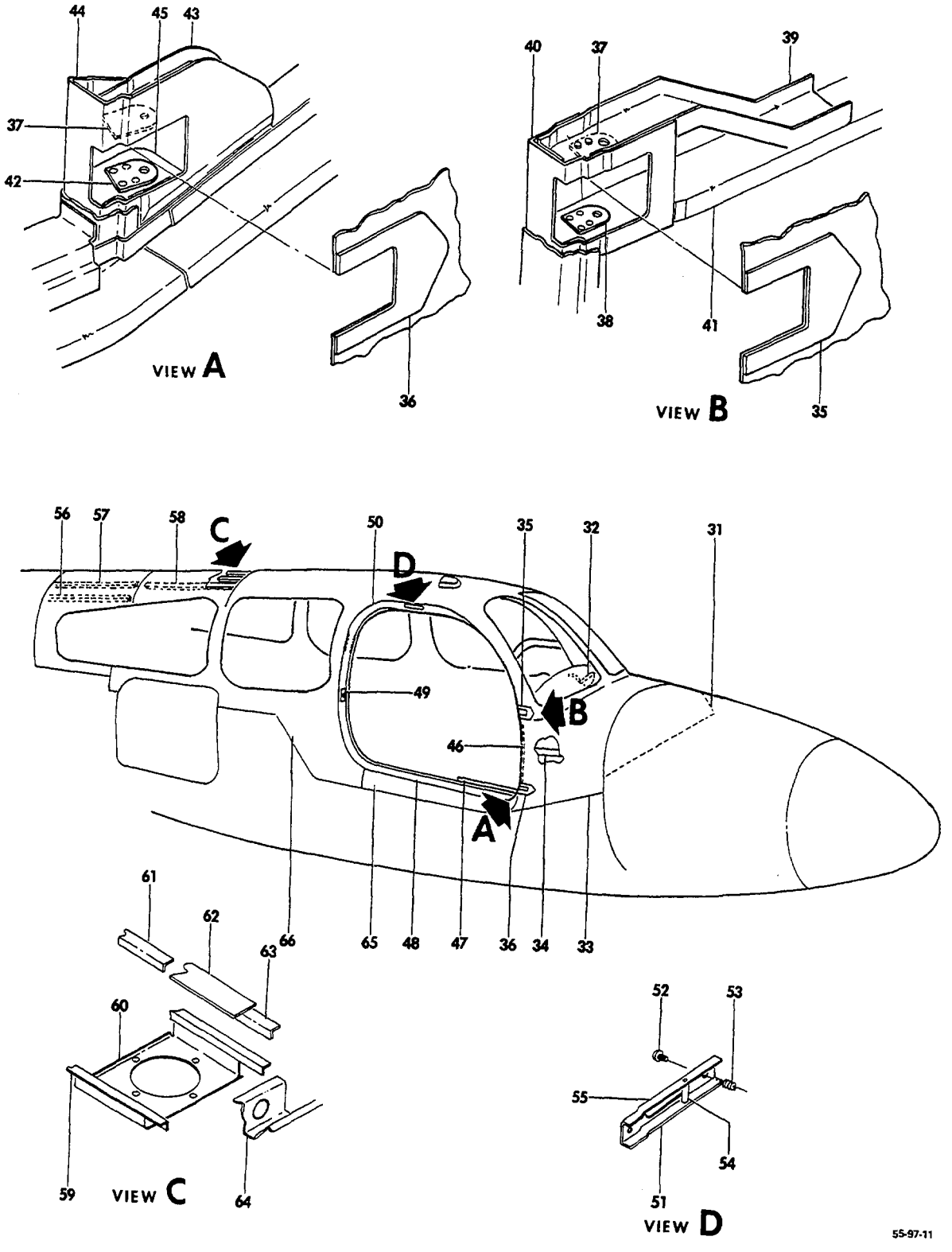

FIGURE 16-50.CABIN CANOPY
SHEET 2 OF 3 SHEETS

SUB-SECT UNIT & ITEM NO.	PART NO.	DESCRIPTION 1 2 3 4 5 6 7	UNITS PER ASSY	USABLE ON CODE
16-50	95-410030-11	. FIREWALL ASSY,UPPER/SEE CHAPTER 53-13-01/ . .	1	5
- 31	95-410030-620	. FIREWALL ASSY,UPPER/SEE CHAPTER 53-13-01/ . .	1	4
- 32	96-324029-7	. BRACKET,FLOATING INSTR PANEL.	1	7
	95-420011-609	. SECTION ASSY,DOOR POST.	1	1
- 33	95-420011-45	. . SKIN.	1	1
- 34	35-410444-7	. . STRINGER.	1	1
- 35	35-410452-33	. . REINFORCEMENT,UPPER/DOOR POST/.	1	1
- 36	35-410452-35	. . REINFORCEMENT,LOWER/DOOR POST/.	1	1
- 37	35-410038-58	. . REINFORCEMENT,UPPER/DOOR HINGE/	2	1
- 38	35-400445-6	. . REINFORCEMENT,LOWER/UPPER DOOR HINGE/ . . .	1	1
- 39	35-410038-122	. . CHANNEL,UPPER/UPPER DOOR HINGE/	1	1
- 40	35-410038-120	. . DOUBLER/UPPER DOOR HINGE/	1	1
- 41	35-400445-2	. . CHANNEL,LOWER/UPPER DOOR HINGE/	1	1
- 42	35-410038-60	. . REINFORCEMENT,LOWER/LOWER DOOR HINGE/ . . .	1	1
- 43	35-410038-44	. . CHANNEL,UPPER/LOWER DOOR HINGE/	1	1
- 44	35-410038-54	. . DOUBLER/LOWER DOOR HINGE/	1	1
- 45	35-410038-46	. . CHANNEL,LOWER/LOWER DOOR HINGE/	1	1
	35-400320-93	. . BRACKET	1	1
- 46	35-410211-2	. . BULKHEAD,DOOR POST.	1	1
	96-530001-105	. WINDLACE,DOOR FRAME	1	13
	35-534420-81	. WINDLACE,DOOR FRAME	1	8
- 47	96-530004-199	. WINDLACE,DOOR FRAME	1	4
- 48	35-400457	. SILL,CABIN DOOR	1	19
	AN530-6R6	. SCREW,DOOR SILL ATTACH.	16	1
- 49	35-400322-2	. PLATE ASSY,DOOR LATCH	1	1
	AN507-1032R8	. SCREW,DOOR LATCH.	2	1
	AN960-3	. WASHER.	2	1
- 50	35-410038-88	. SECTION,UPPER DOOR.	1	1
- 51	35-410456-27	. CHANNEL	1	1
		/ATTACHING PARTS/		
- 52	AN525-10-8	. SCREW	1	
- 53	100943CR-2X020F	. SPRING.	1	
	AN960-10	. WASHER.	1	
		----*----		
	AN525-1016	. SCREW	1	1
- 54	35-410456-29	. BUSHING	1	1
- 55	R 102809-125-030	. PIN	1	1
	95-420015-123	. STRINGER,LH	1	12
- 56	95-420015-124	. STRINGER,RH	1	12
	95-420015-121	. STRINGER,LH	1	1
- 57	95-420015-122	. STRINGER,RH	1	1
	35-410444-31	. STRINGER,LH	1	2
- 58	35-410444-32	. STRINGER,RH	1	2
	95-420015-79	. STIFFENER,LH.	1	5
- 59	95-420015-81	. STIFFENER,RH.	1	5
- 60	95-420015-63	. DUCT,FRESH AIR.	1	11
- 61	95-420015-119	. STRINGER.	1	3
- 62	95-420015-127	. DOUBLER	1	3
- 63	95-420015-117	. STRINGER.	1	3
- 64	95-420015-126	. SPLICE,BULKHEAD	1	1
- 65	35-410452-3	. SKIN,CANOPY	1	1
- 66	35-410452-9	. SKIN,CANOPY	1	9
	95-420015-178	. SKIN,CANOPY	1	10

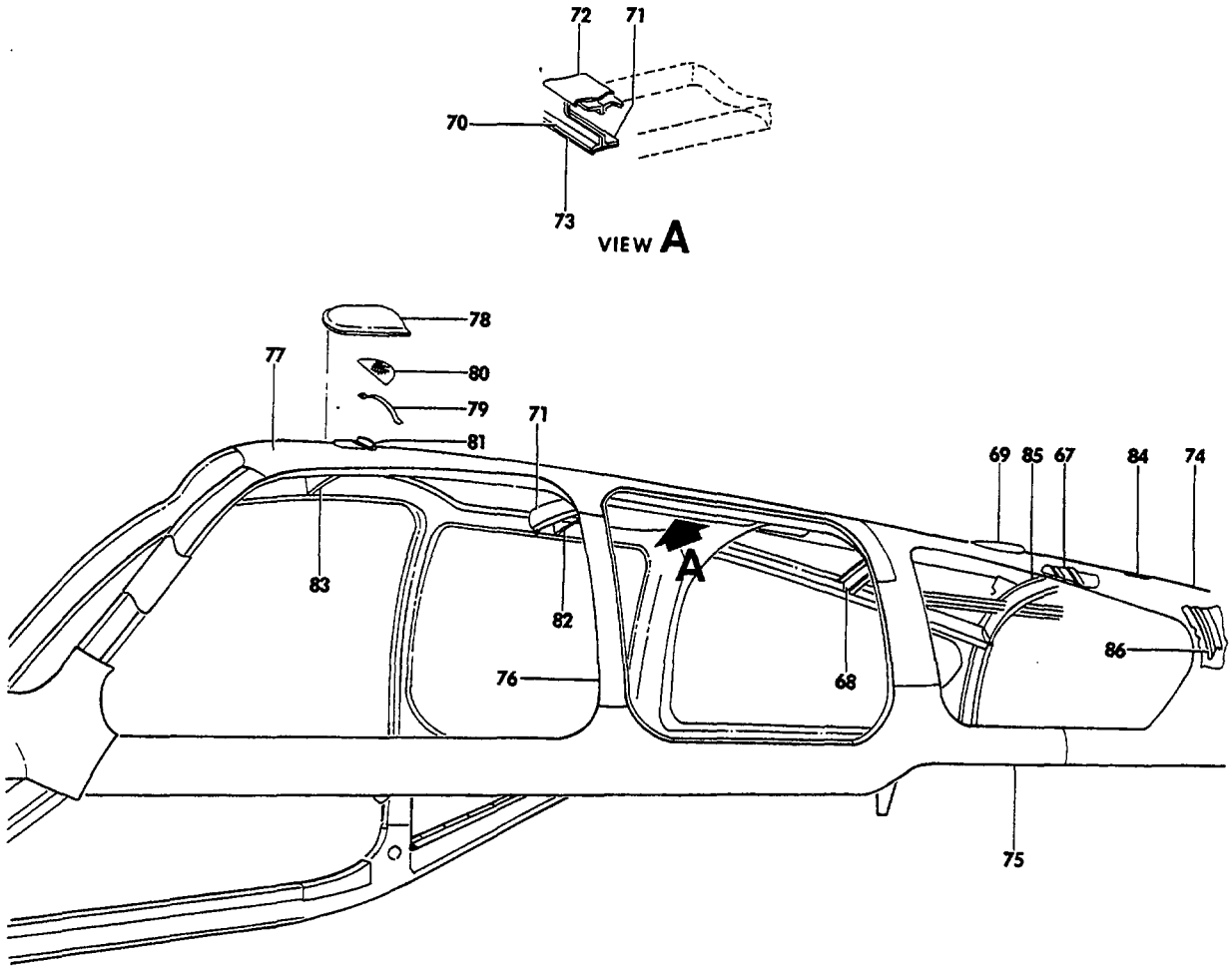

FIGURE 16-50.CABIN CANOPY
SHEET 3 OF 3 SHEETS

ATA CODE & INDEX NO.	PART NO.	DESCRIPTION 1 2 3 4 5 6 7	UNITS PER ASSY	USABLE ON CODE
16-50 - 67	95-440006-209	. CHANNEL,UPPER BULKHEAD LH/STA 150/.	1	7
- 68	95-440006-211	. CHANNEL,UPPER BULKHEAD RH/STA 150/.	1	7
	35-410152	. VENT,CABIN AIR EXHAUST AFT.	1	13
- 69	95-420015-167	. VENT,CABIN AIR EXHAUST AFT.	1	8
	35-410038-148	. BULKHEAD ASSY,CANOPY/STA 113.2/	1	5
- 70	35-410038-140	. . DOUBLER	1	5
- 71	35-410038-142	. . CHANNEL	1	5
- 72	35-410038-144	. . DOUBLER	1	5
- 73	34-410038-146	. . DOUBLER	1	5
- 74	95-420015-115	. SKIN,CANOPY LH AFT.	1	9
	95-420015-173	. SKIN,CANOPY LH AFT.	1	14
	95-420015-89	. SKIN,CANOPY LH AFT.	1	4
	95-420015-116	. SKIN,CANOPY RH AFT.	1	9
	95-420015-174	. SKIN,CANOPY RH AFT.	1	14
	95-420015-90	. SKIN,CANOPY RH AFT.	1	4
- 75	95-420015-101	. SKIN,CANOPY LH LOWER SIDE	1	1
- 76	35-410452-75	. SKIN,CANOPY LH SIDE	1	1
- 77	95-420015-61	. SKIN,CANOPY FWD	1	16
	35-410452-105	. SKIN,CANOPY FWD	1	17
	96-420001-87	. SKIN,CANOPY FWD	1	4
		NOTE FOR CABIN DOOR,BAGGAGE AND UTILITY DOORS SEE CHAPTER 52. FOR CABIN WINDOWS AND WINDSHIELD SEE CHAPTER 56.		
- 78	95-420015-167	VENT,CABIN AIR EXHAUST,FWD.	1	4
- 79	95-420015-165	RETAINER.	1	4
- 80	95-420015-163	SCREEN.	1	4
- 81	95-420015-161	ANGLE	1	4
	35-410153	DUCT,CABIN AIR EXHAUST FWD.	1	4
	96-420001-83	BULKHEAD ASSY,CANOPY/STA 116.25/.	1	15
- 82	96-420001-57	. BULKHEAD.	1	4
	96-420001-49	. ANGLE	1	15
	96-420001-51	. ANGLE	1	15
	96-420001-101	BULKHEAD ASSY,CANOPY/STA 94.75/	1	15
- 83	96-420001-93	. BULKHEAD.	1	4
	96-420001-49	. ANGLE	1	15
	96-420001-51	. ANGLE	1	15
	96-420001-95	SHIM.	1	4
	96-420001-91	PLUG.	1	4
	96-420001-85	DOUBLER	1	4
	96-420001-221	DOUBLER,STA 151	1	4
- 84	96-440015-13	DOUBLER,FRESH AIR INLET	1	4
- 85	95-440006-9	ZEE,STA 170 RH.	1	5
- 86	95-440006-11	ZEE,STA 170 LH.	1	5

CODES OF EFFECTIVITY

1	TC-1 THRU TC-1402 EXCEPT TC-350	2	TC-1 THRU TC-125
3	TC-126 THRU TC-954 EXCEPT TC-350	4	TC-955 THRU TC-1402
5	TC-1 THRU TC-954 EXCEPT TC-350	6	TC-1 THRU TC-1337 EXCEPT TC-350
7	TC-191 THRU TC-1402 EXCEPT TC-350	8	TC-582 THRU TC-954
9	TC-1 THRU TC-811 EXCEPT TC-350	10	TC-812 THRU TC-1402
11	TC-582 THRU TC-1402	12	TC-126 THRU TC-1402 EXCEPT TC-350
13	TC-1 THRU TC-581 EXCEPT TC-350	14	TC-812 THRU TC-954
15	TC-955 THRU TC-1364	16	TC-1 THRU TC-75
17	TC-76 THRU TC-954 EXCEPT TC-350	18	TC-1 THRU TC-501 EXCEPT TC-350
19	TC-502 THRU TC-1032	20	TC-1033 THRU TC-1402

"END"

53-16-51
CANOPY SECTION
TC-350 & TC-1403 THRU TC-1607
TE-1 THRU TE 942 EXCEPT TE-938

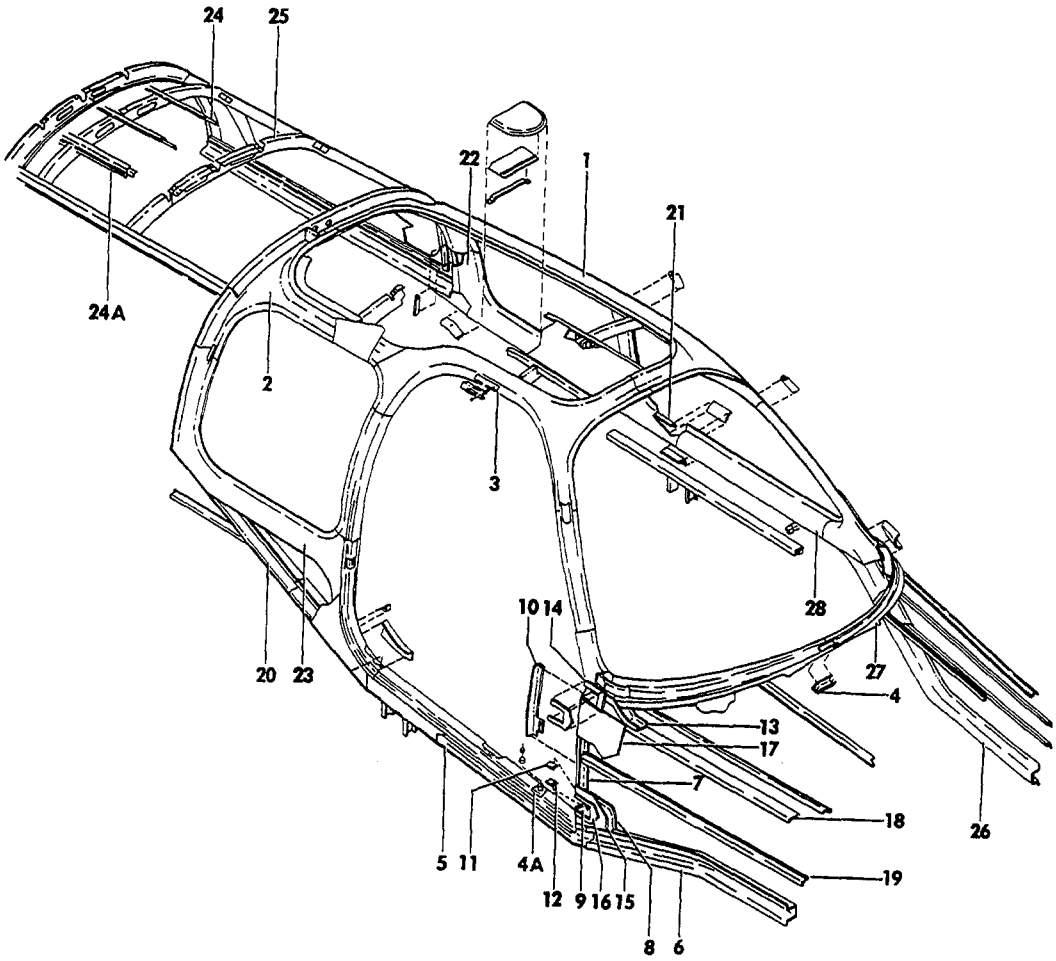

55-97-18

FIGURE 16-51.CABIN CANOPY
/SHEET 1 OF 3 SHEETS/

ATA CODE & INDEX NO.	PART NO.	DESCRIPTION 1 2 3 4 5 6 7	UNITS PER ASSY	USABLE ON CODE
16-51	96-420000-19	STRUCTURE ASSY,CABIN UPPER/LESS UTILITY BAG DR/	NP	2
	96-420000-21	STRUCTURE ASSY,CABIN UPPER/WITH UTILITY BAG.DR/	NP	2
	96-420001-187	STRUCTURE ASSY,CABIN UPPER/LESS UTILITY BAG.DR/	NP	3
	96-420001-189	STRUCTURE ASSY,CABIN UPPER/WITH UTILITY BAG.DR/	NP	3
	96-420001-681	. CANOPY ASSY	1	4
	96-420001-201	. CANOPY INSTL/RA4200/	NP	5
	95-420015-205	. CANOPY INSTL/RA4200/	NP	2
	96-420001-229	. CANOPY INSTL/RA4200/	NP	7
	35-410038-602	. . HAT SECTION ASSY	1	1
	35-410038-6	. . . HAT SECTION	1	8
- 1	35-410038-213	. . . HAT SECTION,LH	1	4
- 2	35-410038-604	. . HAT SECTION ASSY,UPPER RH	1	1
	35-410038-90	. . . HAT SECTION,RH	1	5
	35-410038-205	. . . HAT SECTION,RH	1	4
- 3	96-420054	. . BRACKET ASSY	1	1
	NAS387-832-8P	. . SCREW	2	1
- 4	96-420001-203	. . SPLICE,WINDSHIELD LOWER	1	1
	96-420001-603	. . LONGERON ASSY,CABIN DOOR	1	1
- 4A	35-410176	. . . BRACKET ASSY,CABIN DOOR STOP	1	1
- 5	96-420001-23	. . . LONGERON,RH	1	1
- 6	96-420001-25	. . LONGERON,RH FWD	1	1
	96-420001-604	. . SECTION ASSY,RH DOOR POST	1	1
- 7	35-410211-2	. . . BULKHEAD,RH DOOR POST	1	1
- 8	35-410038-44	. . . CHANNEL,LOWER HINGE UPPER	1	1
- 9	35-410038-46	. . . CHANNEL,LOWER DOOR HINGE LOWER	1	1
- 10	35-324459-1	. . . REINFORCEMENT,LOWER CHANNEL DOOR HINGE	1	1
- 11	35-410038-58	. . . REINFORCEMENT,UPPER AND LOWER DOOR HINGE	2	1
- 12	35-400445-6	. . . REINFORCEMENT,UPPER DOOR HINGE LOWER	1	1
- 13	35-410038-122	. . . CHANNEL,UPPER DOOR HINGE UPPER	1	1
- 14	35-410038-120	. . . REINFORCEMENT,UPPER DOOR HINGE	1	1
- 15	35-410038-54	. . . DOUBLER,LOWER DOOR HINGE	1	1
- 16	35-410452-35	. . . REINFORCEMENT,LOWER DOOR HINGE	1	1
- 17	96-420001-75	. . . SKIN	1	1
	96-420001-53	. . . CHANNEL ASSY,UPPER DOOR HINGE LOWER	1	1
- 18	96-420001-55	. . . . CHANNEL,UPPER DOOR HINGE LOWER	1	1
- 19	96-420001-35	. . . STRINGER,RH/F/	1	1
	A1784-6Z1	. . . NUT	3	1
- 20	95-420015-99	. . LONGERON,RH AFT	1	1
- 21	95-420011-69	. . STIFFENER	1	1
	95-420015-609	. . LONGERON ASSY,LH	1	1
- 22	35-420038-199	. . . LONGERON	1	1
	35-410180-12	. . . GUSSET	1	1
	35-410038-632	. . HAT SECTION ASSY,RH	1	1
- 23	35-410038-98	. . . HAT SECTION	1	1
- 24	95-420015-121	. . STRINGER,LH/B/	1	1
- 24A	95-420015-122	. . STRINGER,RH/B/	1	1
	95-440006-209	. . CHANNEL,UPPER BULKHEAD/STA 151/	1	4
	95-440006-211	. . CHANNEL,UPPER BULKHEAD/STA 151/	1	4
	95-440006-221	. . DOUBLER,UPPER BULKHEAD/STA 151/	1	4
- 25	96-420131-1	. . BULKHEAD,UPPER/STA 151/	1	6
	96-420001-217	. . LONGERON ASSY,FWD UPPER LH	1	1
- 26	96-420001-21	. . . LONGERON,LH	1	1
- 27	96-420031-1	. . SUPPORT,WINDSHIELD LOWER LH	1	1
	96-420031-2	. . SUPPORT,WINDSHIELD LOWER RH	1	1
	96-420001-605	. . PAN ASSY,CANOPY LH	1	1
- 28	96-420001-19	. . . LONGERON,LH	1	1
	6K45	. . . RIVNUT	2	1
	A6191-8Z3	. . . NUT	2	1
	49296	. . CLIP	2	1

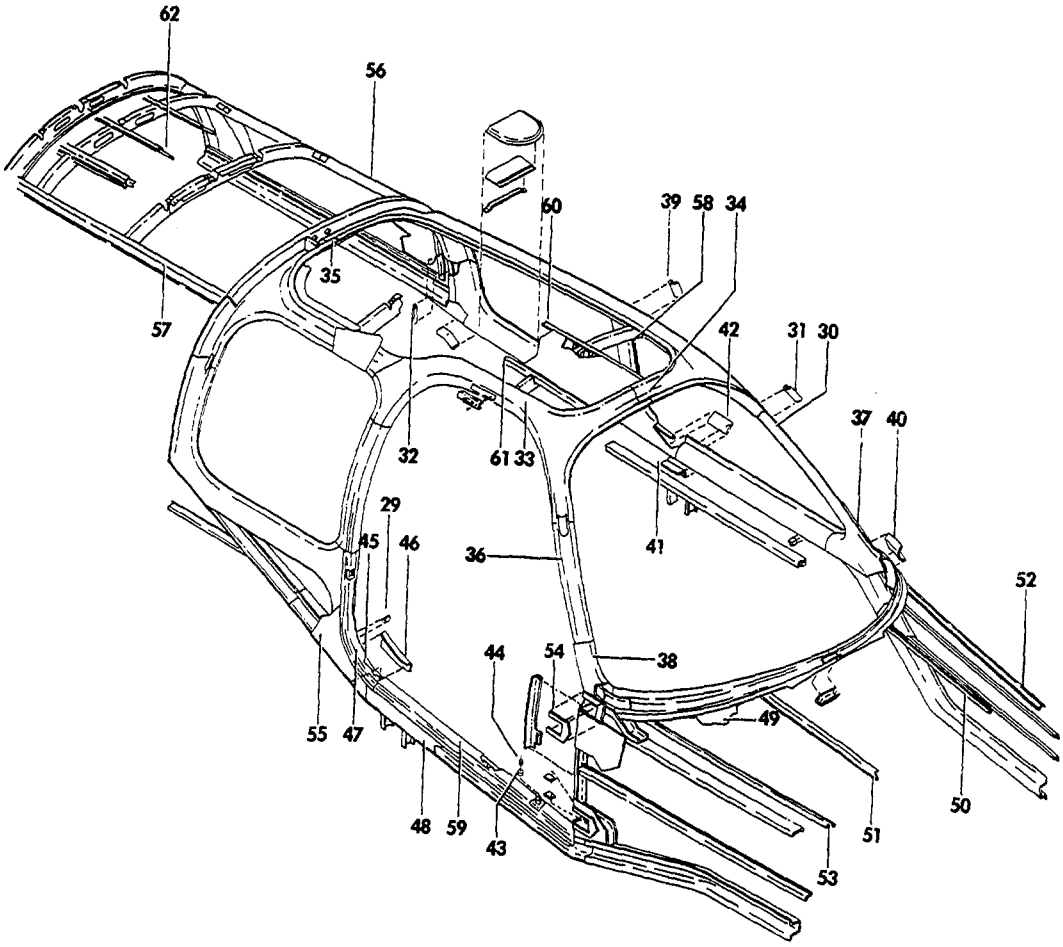

55-97-19

FIGURE 16-51.CABIN CANOPY
/SHEET 2 OF 3 SHEETS/

ATA CODE & INDEX NO.	PART NO.	DESCRIPTION 1 2 3 4 5 6 7	UNITS PER ASSY	USABLE ON CODE
16-51	96-420001-87	SKIN,UPPER CABIN FWD.	1	1
- 29	35-410038-74	CLIP.	1	1
- 30	35-410038-173	HAT SECTION,LH WINDSHIELD	1	1
- 31	35-410038-4	SPLICE,LH	1	1
	35-410038-34	SPLICE,RH	1	1
	95-410011-195	CLIP,LH	1	9
	95-410011-196	CLIP,RH	1	9
	35-410038-10	SPLICE,LH & RH/STA 131.50/.	2	1
- 32	35-410038-12	SPLICE,LH & RH/STA 131.50/.	1	1
- 33	35-410038-88	SECTION,DOOR UPPER STRIKER.	1	1
- 34	35-410038-22	SPLICE,UPPER SECTION FWD.	1	1
	35-410038-24	SPLICE,UPPER SECTION AFT.	1	8
	58-420021-3	SPLICE,UPPER SECTION AFT.	1	6
- 35	35-410038-126	SPLICE,HAT SECTION/STA 133.875/	1	8
	96-420135-3	SPLICE,HAT SECTION/STA 133.875/	1	6
- 36	35-410038-175	HAT SECTION,RH WINDSHIELD	1	1
- 37	96-420001-191	DOUBLER,LH.	1	1
- 38	96-420001-192	DOUBLER,RH.	1	1
	35-410038-32	SPLICE,RH	1	1
- 39	35-410038-8	SPLICE,LH	1	1
- 40	35-410038-177	SPLICE,LH	1	1
	35-410038-179	SPLICE,RH	1	1
- 41	35-410038-70	SPLICE.	1	1
- 42	35-410038-72	SPLICE.	1	1
- 43	35-410177	MOUNT	1	1
- 44	35-410287	BUSHING	1	1
	AN931-5-9	GROMMET	1	1
- 45	35-410038-102	ANGLE	1	1
- 46	35-410038-106	ANGLE	1	1
- 47	35-410038-110	SECTION,AFT DOOR.	1	1
- 48	35-410452-3	SKIN,DOOR SILL.	1	1
- 49	96-420001-195	SKIN,WINDSHIELD LOWER	1	1
- 50	96-420001-197	STRINGER,LH/B/.	1	1
- 51	96-420001-198	STRINGER,RH/B/.	1	1
- 52	96-420001-199	STRINGER,LH/C/.	1	1
- 53	96-420001-200	STRINGER,RH/C/.	1	1
- 54	35-410452-33	REINFORCEMENT	1	1
- 55	95-420015-178	SKIN,LOWER RH	1	1
	95-420015-101	SKIN,LOWER LH	1	1
	96-420001-89	SKIN,UPPER LH AFT CABIN	1	1
	96-420001-90	SKIN,UPPER RH AFT CABIN	1	1
- 56	95-420015-123	STRINGER,LH/C/.	1	1
- 57	95-420015-124	STRINGER,RH/C/.	1	1
- 58	35-410452-75	SKIN.	1	1
	58-420039	SKIN,LH WINDSHIELD SIDE	1	10
	35-534420-81	WINDLACE,CABIN DOOR	1	8
	96-530004-199	WINDLACE.	1	6
- 59	35-400457	SILL.	1	1
	AN530-6R6	SCREW/SILL ATTACH/.	16	1
- 60	35-410038-154	STRINGER.	1	8
- 61	35-410038-155	STRINGER,RH	1	8
	35-534399-3	SPACER,COAT HANGER.	1	1
- 62	96-420001-99	STRINGER/A/	1	8
	96-420132-1	STRINGER/A/AFT.	1	6
	96-420132-3	STRINGER/A/CENTER	1	6
	58-420050-1	STRINGER/A/FWD.	1	9
	96-420001-97	CHANNEL	1	8
	96-420134-1	REINFORCEMENT	1	6

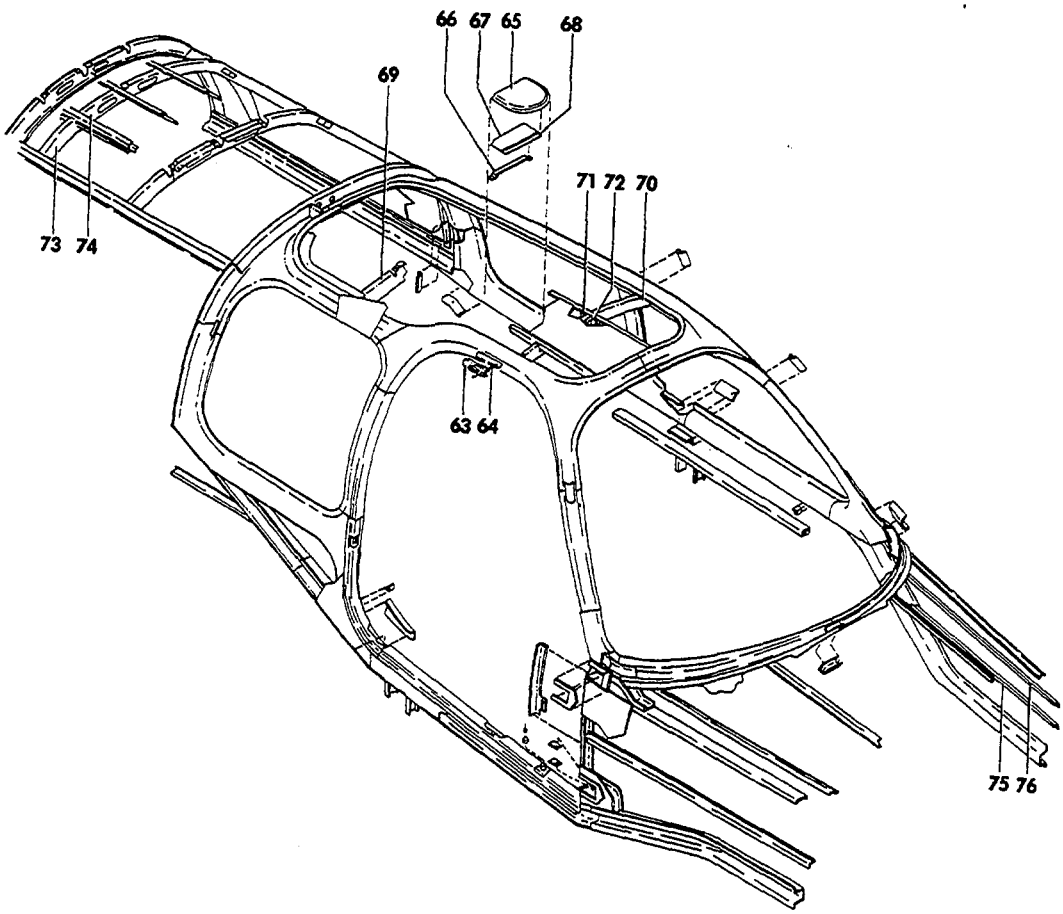

55-97-20

FIGURE 16-51.CABIN CANOPY
/SHEET 3 OF 3 SHEETS/

SUB-SECT UNIT & ITEM NO.	PART NO.	DESCRIPTION 1 2 3 4 5 6 7	UNITS PER ASSY	USABLE ON CODE
16-51	96-530007-229	. . WRAPPER,COWL SKIN	1	1
	PK79X26-6	. . SCREW,COWL SKIN ATTACH.	40	1
- 63	35-410456-27	. . CHANNEL	1	1
	AN525-10-8	. . SCREW,CHANNEL ATTACH.	1	1
- 64	100943CR-2X020F	. . SPRING.	1	1
	AN960-10	. . WASHER.	1	1
		NOTE FOR CABIN DOOR,BAGGAGE DOOR & UTILITY BAGGAGE DOOR SEE CHAPTER 52.FOR CABIN WINDOWS & WINDSHIELD SEE CHAPTER 56.		
- 65	95-420015-167	. . VENT,UPPER CABIN AIR EXHAUST.	1	1
- 66	95-420015-165	. . RETAINER,UPPER CABIN AIR EXHAUST VENT . . .	1	1
- 67	95-420015-163	. . SCREEN,UPPER CABIN VENT	1	1
- 68	95-420015-161	. . ANGLE	1	1
	AN515-4-3	. . SCREW	4	1
	AN960-4L	. . WASHER.	4	1
	MS20365-440	. . NUT	4	1
- 69	96-420001-83	. . BULKHEAD ASSY,CANOPY/STA 116.25/.	1	8
	58-420053-1	. . BULKHEAD,AFT/STA 116.25/.	1	6
	96-420001-91	. . PLUG.	2	8
	96-420001-85	. . DOUBLER	1	8
	58-420052-1	. . REINFORCEMENT	1	6
	96-420001-101	. . BULKHEAD ASSY,CANOPY.	1	4
- 70	96-420001-93	. . . BULKHEAD,CANOPY/STA 94.75/.	1	1
- 71	96-420001-49	. . . ANGLE	2	4
- 72	96-420001-51	. . . ANGLE	2	4
	96-420001-95	. . . SHIM.	1	4
	58-420051-3	. . BULKHEAD,CANOPY/STA 92.25/.	1	10
- 73	96-440001-17	. . ZEE,UPPER RH/STA 171/	1	8
- 74	96-440001-15	. . ZEE,UPPER LH/STA 171/	1	8
	96-440001-83	. . DOUBLER,UPPER BULKHEAD/STA 170/	1	8
	002-430035-3	. . BULKHEAD/STA 170/	1	6
- 75	96-420001-31	. . STRINGER,LH/X/.	1	1
- 76	R 96-420001-33	. . STRINGER,LH/F/.	1	1
	96-410032	. . FIREWALL ASSY,UPPER	1	1

CODES OF EFFECTIVITY

1	TC-1403 THRU TC-1607 & TC-350 TE-1 THRU TE-942 EXCEPT TE-938	2	TC-1403 THRU TC-1607
3	TC-350 & TE-1 THRU TE-942 EXCEPT TE-938	4	TE-1 THRU TE-767 & TC-350
5	TE-768 THRU TE-846	6	TC-1403 THRU TC-1607 TE-847 THRU TE-942 EXCEPT TE-938
7	TE-847 THRU TE-942 EXCEPT TE-938	8	TE-1 THRU TE-846 & TC-350
9	TE-768 THRU TE-807	10	TC-1403 THRU TC-1607 TE-733 & TE-768 THRU TE-942 EXCEPT TE-938

"END"

53-17-01
FRONT SPAR CARRY THRU STRUCTURE
TC-1 THRU TC-1525 EXCEPT TC-1471
TE-1 THRU TE-896

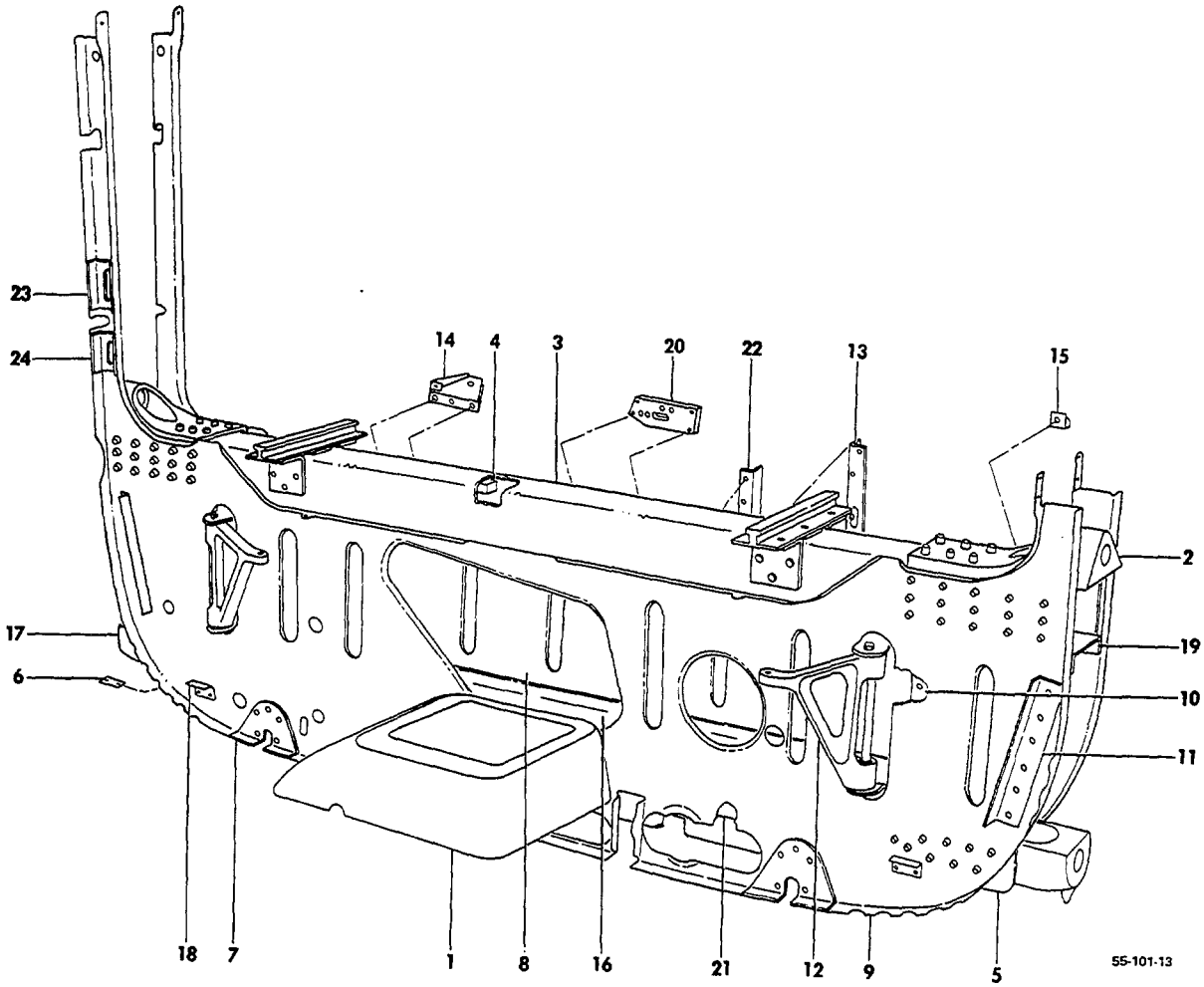

FIGURE 17-01.FRONT SPAR CARRY THRU STRUCTURE
/SHEET 1 OF 2 SHEETS/

SUB-SECT UNIT & ITEM NO.	PART NO.	DESCRIPTION 1 2 3 4 5 6 7	UNITS PER ASSY	USABLE ON CODE
17-01	95-420017-15	STRUCTURE INSTL,FRONT SPAR CARRY THRU	NP	1
	95-420017-23	STRUCTURE INSTL,FRONT SPAR CARRY THRU	NP	2
	95-420017-601	. STRUCTURE ASSY,FRONT.	1	14
- 1	35-410259-602	. . SPOTWELD ASSY,LANDING GEAR ACTUATOR SUPPORT	1	14
- 2	95-420005-13	. . FITTING,UPPER	2	14
- 3	95-420017-1	. . CAP,UPPER	1	14
- 4	95-420017-2	. . STIFFENER,UPPER CAP	1	14
- 5	95-420005-7	. . CAP,LOWER	1	14
- 6	35-410260	. . FAIRLEAD.	1	14
- 7	35-410445-5	. . GUSSET,RH FWD & LH AFT.	2	14
	35-410445-6	. . GUSSET,LH FWD & RH AFT.	2	14
- 8	95-420017-13	. . WEB,FWD BULKHEAD.	1	14
- 9	95-420017-11	. . WEB,AFT BULKHEAD.	1	14
- 10	35-410445-15	. . SHIM.	8	14
- 11	35-410445-19	. . ANGLE	4	14
- 12	45-815116-2	. . ARM,LANDING GEAR RETRACT ACTUATOR IDLER	2	3
	1057406-ZU0750	. . BUSHING	4	3
	35-815118	. . ARM,LANDING GEAR RETRACT ACTUATOR IDLER	2	4
	100801S5-0910	. . BUSHING	4	4
		/ATTACHING PARTS/		
	R AN4-55A	. . BOLT.	1	3
	R 100801S5-4781	. . BUSHING	1	3
	R AN960-416L	. . WASHER.	6	3
	R 100951P062-YH	. . WASHER.	2	3
	R AN960-416	. . WASHER.	2	3
	R AN365-428	. . NUT	1	3
	R AN4-15A	. . BOLT.	1	4
	R AN4-14A	. . BOLT.	1	4
	R AN960-416	. . WASHER.	3	4
	R MS21042L4	. . NUT	1	4
		——*——		
- 13	35-410217-48	. . STIFFENER,LH.	1	14
	35-410217-49	. . STIFFENER,RH.	1	14
- 14	95-524000-5	. . BRACKET,PULLEY.	1	14
- 15	35-410217-40	. . ANGLE	2	14
- 16	35-410445-7	. . CHANNEL	1	14
- 17	95-420005-15	. . FITTING,LOWER LH.	1	14
	95-420005-16	. . FITTING,LOWER RH.	1	14
- 18	95-420005-17	. . CLIP,LH FWD & RH AFT.	2	14
	95-420005-18	. . CLIP,LH AFT & RH FWD.	2	14
- 19	95-420005-19	. . CHANNEL,UPPER	1	14
- 20	95-420005-29	. . FAIRLEAD.	1	14
- 21	45-410215-31	. . CHANNEL	1	14
	22NA17-62	. . NUTPLATE/SUPERSEDES 22A17-62/	1	14
	AN366F832	. . NUTPLATE.	2	14
	22A17-82	. . NUTPLATE.	1	14
	AN530-6-6	. . SCREW	1	14
	NAS1426-8	. . HUCKBOLT,LOWER CHANNEL.	28	14
	6LC-C6	. . COLLAR,HUCKBOLT	28	14
	NAS1428-12	. . HUCKBOLT,LOWER SPAR FITTING	36	14
	NAS1428-10	. . HUCKBOLT,LOWER SPAR FITTING	2	14
	6LC-C8	. . COLLAR,HUCKBOLT	38	14
	NAS1428-7	. . HUCKBOLT,UPPER SPAR FITTING	60	14
	NAS1428-9	. . HUCKBOLT,UPPER SPAR FITTING	12	14
	6LC-C8	. . COLLAR,HUCKBOLT	72	14
- 22	95-924013-3	. . ANGLE,LH.	1	5
	96-924026-7	. . ANGLE,LH.	1	6
	95-924013-4	. . ANGLE,RH.	1	5
	96-924026-8	. . ANGLE,RH.	1	5
- 23	95-420017-21	. . DOUBLER	2	7
- 24	96-970005-17	. . DOUBLER	2	8

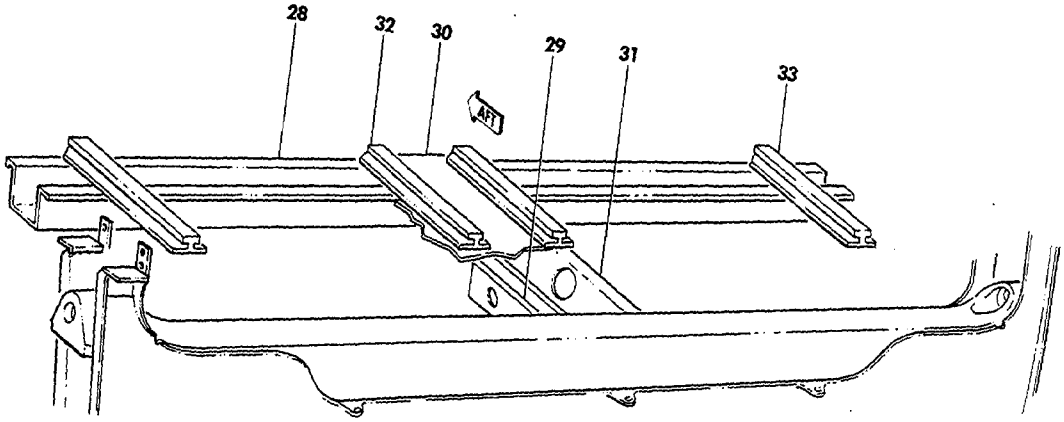

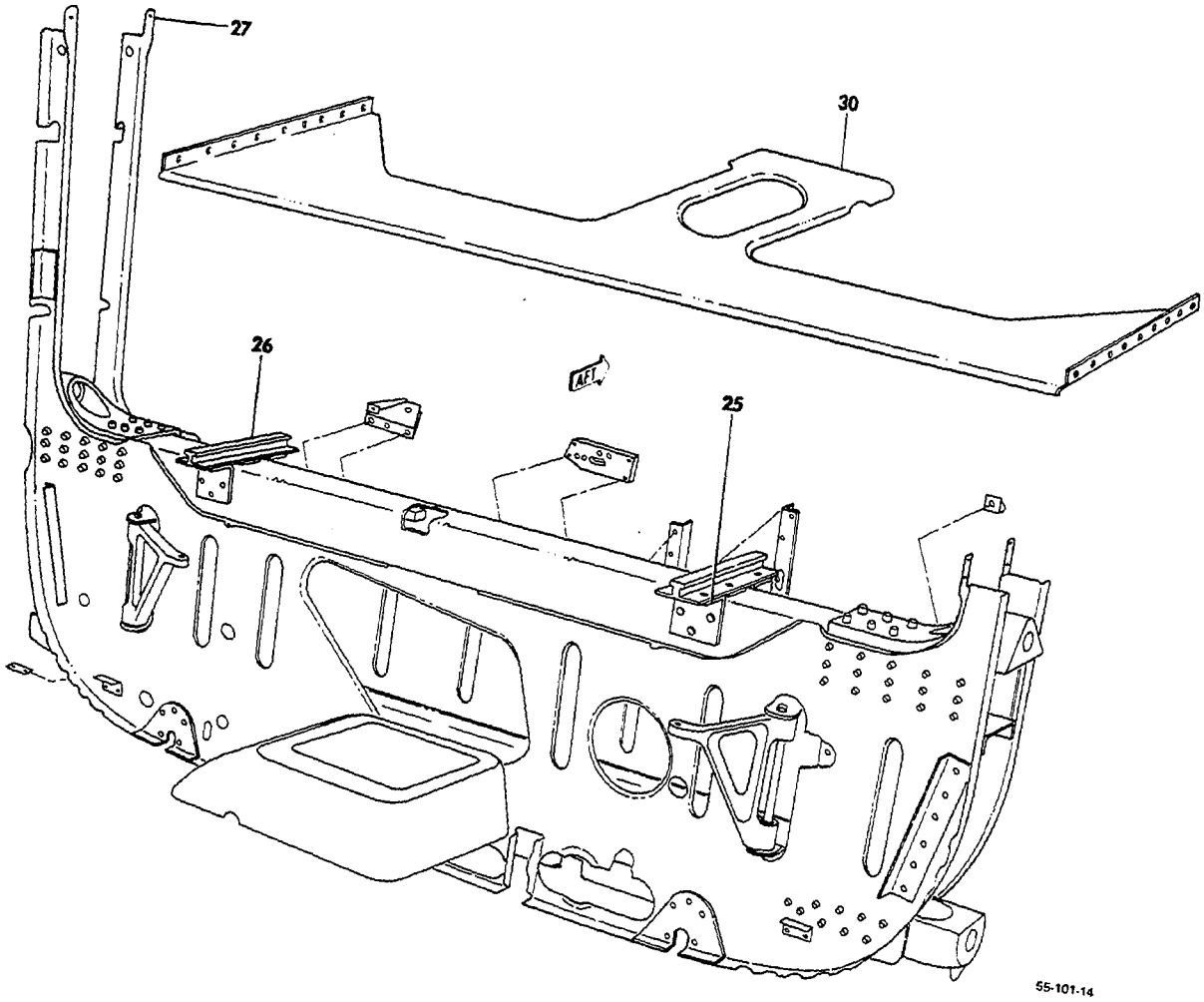

FIGURE 17-01. FRONT SPAR CARRY THRU STRUCTURE
/SHEET 2 OF 2 SHEETS/

ATA CODE & INDEX NO.	PART NO.	DESCRIPTION 1 2 3 4 5 6 7	UNITS PER ASSY	USABLE ON CODE
17-01 - 25	33-410040-1	. . ANGLE,TRACK SUPPORT FWD	2	14
	33-410040-2	. . ANGLE,TRACK SUPPORT AFT	2	14
- 26	95-420017-5	. . TRACK,SEAT.	2	14
		/ATTACHING PARTS/		
	33-410040-5	. . SHIM.	2	
	AN3-13A	. . BOLT.	4	
	MS21042L3	. . NUT/SUPERSEDES MS20365-1032 NUT/.	4	
		----*----		
- 27	35-410217-44	. . CLIP,LH	2	14
	35-410217-46	. . CLIP,RH	2	14
- 28	33-410040-9	. CHANNEL	1	14
	NAS444-2-1	. NUTPLATE.	7	14
- 29	35-410217-26	. BRACKET	1	9
	35-410217-53	. BRACKET	1	10
- 30	33-410040-27	. WEB	1	14
- 31	35-410217-28	. CHANNEL	1	14
- 32	95-420017-7	. TRACK,INBD SEAT	2	11
	95-420017-17	. TRACK,INBD SEAT	2	12
	95-420017-19	. TRACK,INBD SEAT	2	13
- 33	95-420017-9	. TRACK,OUTBD SEAT.	2	11
	95-420017-19	. TRACK,OUTBD SEAT.	2	2
		/ATTACHING PARTS/		
	33-534010-21	. FILLER.	4	
	AN3-5A	. BOLT.	8	
	AN3-6A	. BOLT.	8	
	AN509-10R10	. SCREW	8	
	AN509-10R14	. SCREW	8	
	AN960-10	. WASHER.	16	
	MS20365-1032	. NUT	16	
		----*----		
	414-180657-3	. STOP,SEAT TRACK	16	14
	NAS221-20	. SCREW	8	14
	MS21042L3	. NUT	8	14

CODES OF EFFECTIVITY

1	TC-1 THRU TC-1298 TE-1 THRU TE-451	2	TC-1299 THRU TC-1525 EXCEPT TC-1471 TE-452 THRU TE-896
3	TC-1 THRU TC-1298 TE-1 THRU TE-767	4	TC-1299 THRU TC-1525 EXCEPT TC-1471 TE-768 THRU TE-896
5	TC-1 THRU TC-1441 TE-1 THRU TE-862	6	TC-1442-THRU TC-1525 EXCEPT TC-1471 TE-863 THRU TE-896
7	TC-1 THRU TC-1525 EXCEPT TC-1471 TE-452 THRU TE-896	8	TC-1333 THRU TC-1525 EXCEPT TC-1471 TE-802 THRU TE-896
9	TC-1 THRU TC-1045 TE-1 THRU TE-468	10	TC-1046 THRU TC-1525 EXCEPT TC-1471 TE-469 THRU TE-896
11	TC-1 THRU TC-1298 TE-1 THRU TE-451	12	TC-1299 THRU TC-1525 TE-452,THRU TE-455 TE-457 THRU TE-459 TE-463,TE-472,TE-477 TE-478,TE-480,TE-481
13	TE-456,TE-460,TE-461 TE-462,TE-464,TE-465 TE-466 THRU TE-471 TE-473 THRU TE-476 TE-479,TE-482 THRU TE-896	14	TC-1 THRU TC-1525 EXCEPT TC-1471 TE-1 THRU TE-896

"END"

53-17-02
FRONT SPAR CARRY THRU
TC-1471,TC-1526 THRU TC-1607
TE-897 THRU TE-942 EXCEPT TE-938

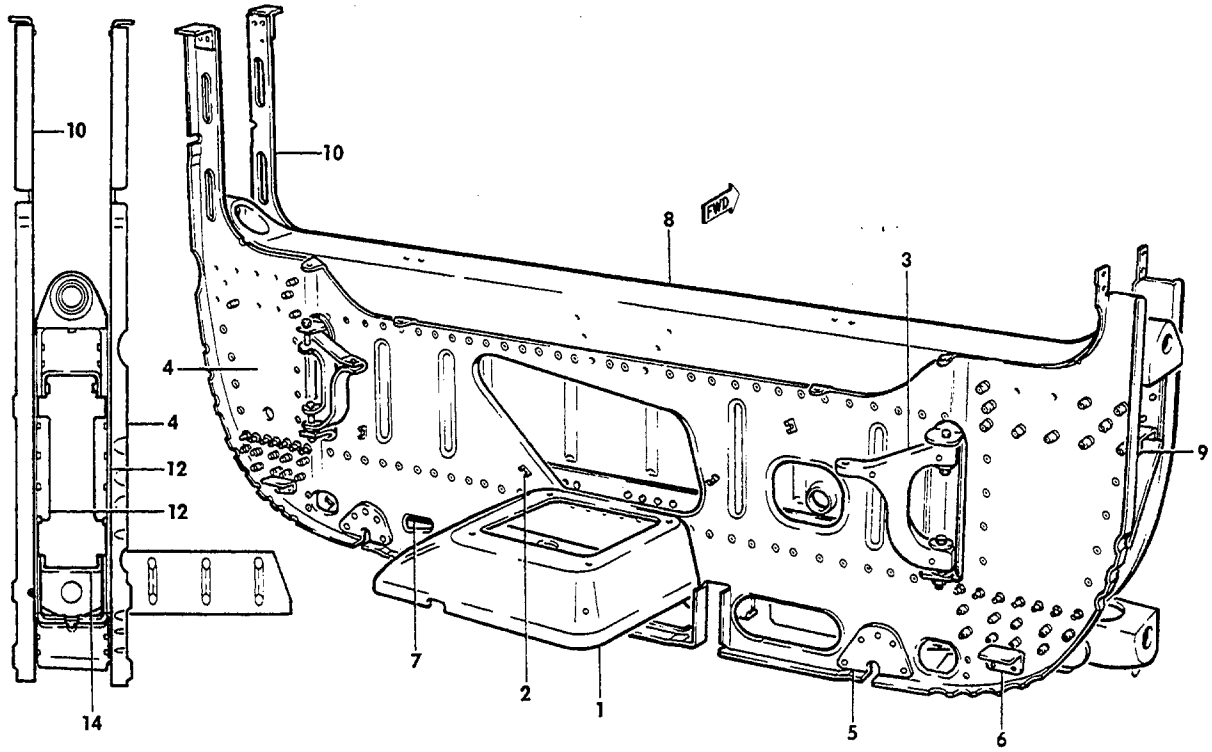

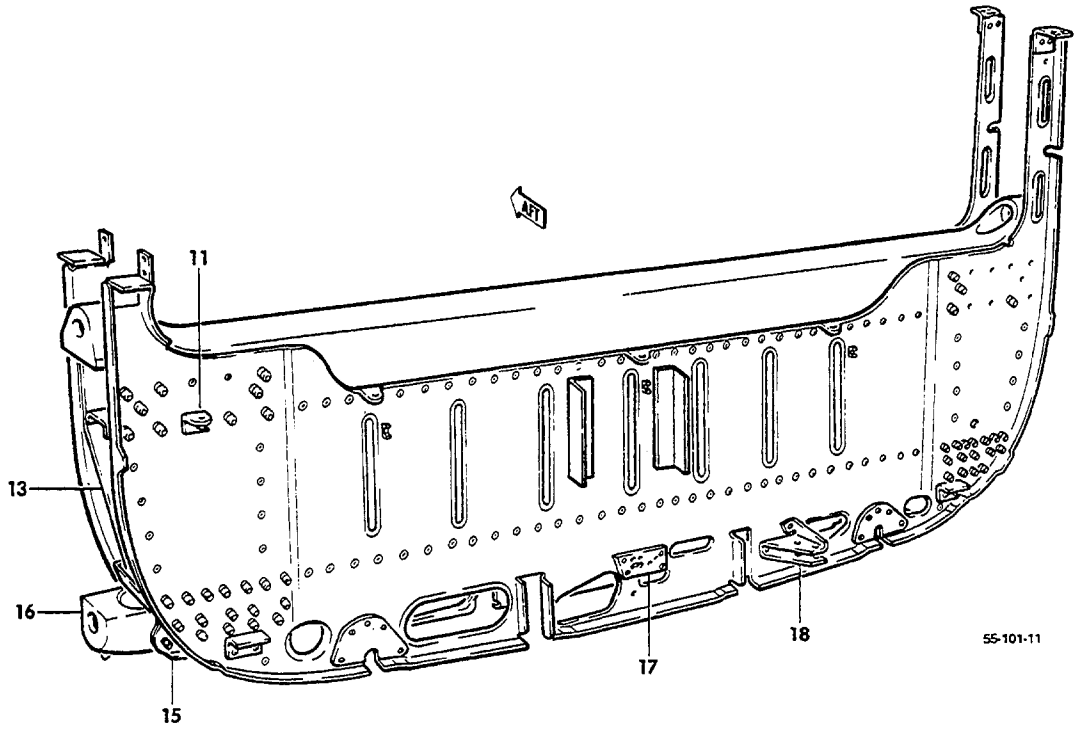

FIGURE 17-02.FRONT SPAR CARRY THRU
/SHEET 1 OF 2 SHEETS/

ATA CODE & INDEX NO.	PART NO.	DESCRIPTION 1 2 3 4 5 6 7	UNITS PER ASSY	USABLE ON CODE
17-02	002-043004-3	CARRY THRU INSTL,FRONT SPAR	NP	1
	002-430013-45	. CARRY THRU INSTL,FRONT SPAR	NP	1
	002-430013-53	. . CARRY THRU ASSY,FRONT SPAR	1	1
- 1	002-430020-27	. . . SUPPORT ASSY,LANDING GEAR ACTUATOR	1	1
- 2	TM2S6	. . . MOUNT,TIE	7	1
- 3	002-430024-1	. . . ARM,LANDING GEAR RETRACT ACTUATOR IDLER /ATTACHING PARTS/	2	1
	AN4-15A	. . . BOLT	1	
	AN4-14A	. . . BOLT	1	
	100801S5-0910	. . . BUSHING	2	
	100951P062YH	. . . WASHER	4	
	AN960-416	. . . WASHER	1	
	AN960-416L	. . . WASHER	2	
	MS20365-428	. . . NUT	2	
		----*----		
- 4	002-430018-7	. . . WEB,AFT	1	1
- 5	002-430013-19	. . . GUSSET	4	1
- 6	002-430013-27	. . . ANGLE	4	1
- 7	002-430013-35	. . . STRIP,RUB	2	1
- 8	002-430015-5	. . . CAP,UPPER SPAR/SUPERSEDES 002-430015-1/	1	1
- 9	002-430015-3	. . . CHANNEL,UPPER	1	1
- 10	002-430018-9	. . . WEB,FWD/SUPERSEDES 002-430018-5 WEB/	1	1
- 11	002-430013-29	. . . CLIP	2	1
- 12	002-430017-1	. . . PLATE,TIE	2	1
- 13	002-430017-2	. . . PLATE,TIE	2	1
- 14	002-430016-5	. . . CHANNEL,LOWER	1	1
	002-430016-3	. . . CHANNEL,LOWER INNER	1	1
- 15	002-430016-1	. . . CAP,LOWER SPAR	1	1
- 16	002-430025-5	. . . FITTING,LOWER SPAR	2	1
- 17	002-430013-25	. . . FAIRLEAD	1	1
- 18	002-430023-7	. . . BRACKET	1	1
	NAS1426-8	. . . LOCK-BOLT	28	1
	NAS1426-9	. . . LOCK-BOLT	18	1
	NAS1426-10	. . . LOCK-BOLT	2	1
	NAS1428-7	. . . LOCK-BOLT	20	1
	NAS1428-11	. . . LOCK-BOLT	38	1
	NAS1080C6	. . . COLLAR	48	1
	NAS1080C8	. . . COLLAR	58	1
	MS21047L3	. . . NUTPLATE	4	1

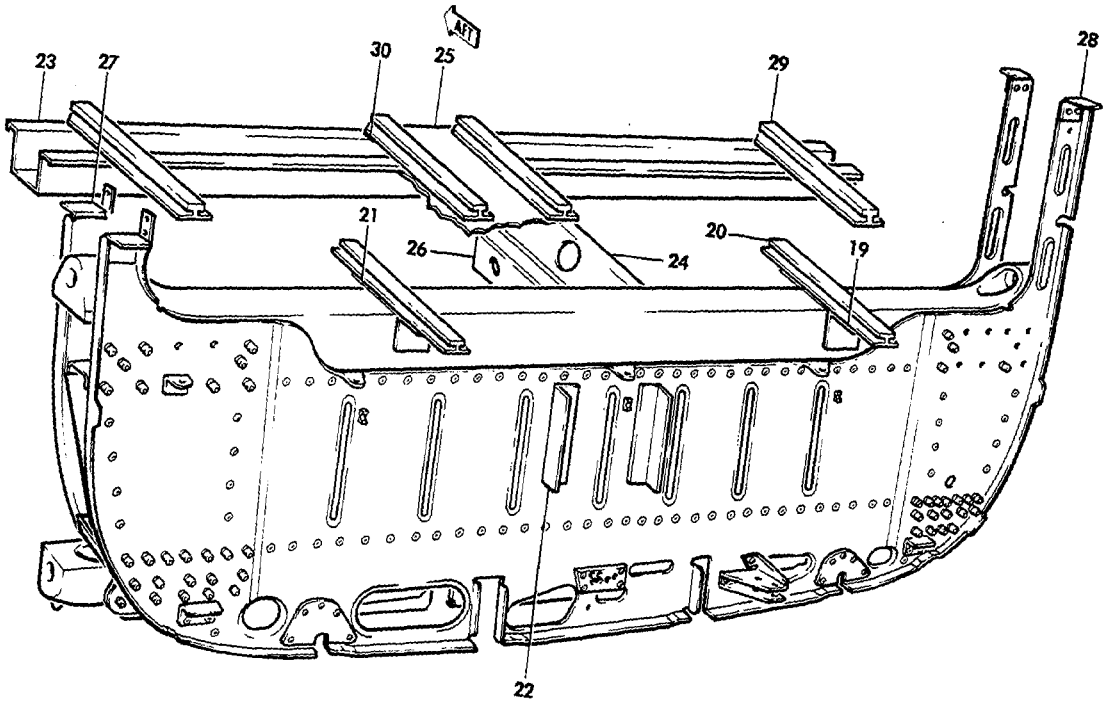

55-101-12

FIGURE 17-02. FRONT SPAR CARRY THRU
/SHEET 2 OF 2 SHEETS/

ATA CODE & INDEX NO.	PART NO.	DESCRIPTION 1 2 3 4 5 6 7	UNITS PER ASSY	USABLE ON CODE
17-02 - 19	002-430023-3	. . ANGLE,SEAT TRACK SUPPORT AFT.	2	1
	002-430023-5	. . ANGLE,SEAT TRACK SUPPORT FWD.	2	1
- 20	002-430021-19	. . TRACK,CENTER SEAT	2	1
		/ATTACHING PARTS/		
- 21	NAS464P3A6	. . JO-BOLT	4	
	002-430013-33	. . SPACER.	2	
		——*——		
- 22	002-430013-55	. . BRACKET	1	1
	002-430013-56	. . BRACKET	1	1
- 23	33-410040-9	. CHANNEL	1	1
- 24	002-430009-59	. CHANNEL	1	1
- 25	33-410040-27	. WEB	1	1
- 26	002-430009-61	. BRACKET	1	1
- 27	35-410217-44	. CLIP,AFT.	2	1
- 28	35-410217-46	. CLIP,FWD.	2	1
- 29	95-420017-19	. TRACK,SEAT.	4	1
	414-180657-3	. STOP,SEAT	4	1
	NAS221-20	. SCREW	2	1
	MS21042L3	. NUT	2	1
		/ATTACHING PARTS/		
- 30	33-534010-21	. FILLER.	1	
	MS24694S56	. SCREW/SUPERSEDES AN509-10R14 SCREW/	2	
	AN509-10R10	. SCREW	2	
	AN960-10	. WASHER.	4	
	MS20365-1032	. NUT	4	
		——*——		
	35-420016	. GUSSET.	1	1
	35-420017-1	. GUSSET.	1	1

CODES OF EFFECTIVITY

1 TC-1526 THRU TC-1607
AND TC-1471
TE-897 THRU TE-942
EXCEPT TE-938

"END"

53-17-50
REAR SPAR CARRY THRU STRUCTURE
TC-1 THRU TC-1525 EXCEPT TC-1471
TE-1 THRU TE-896

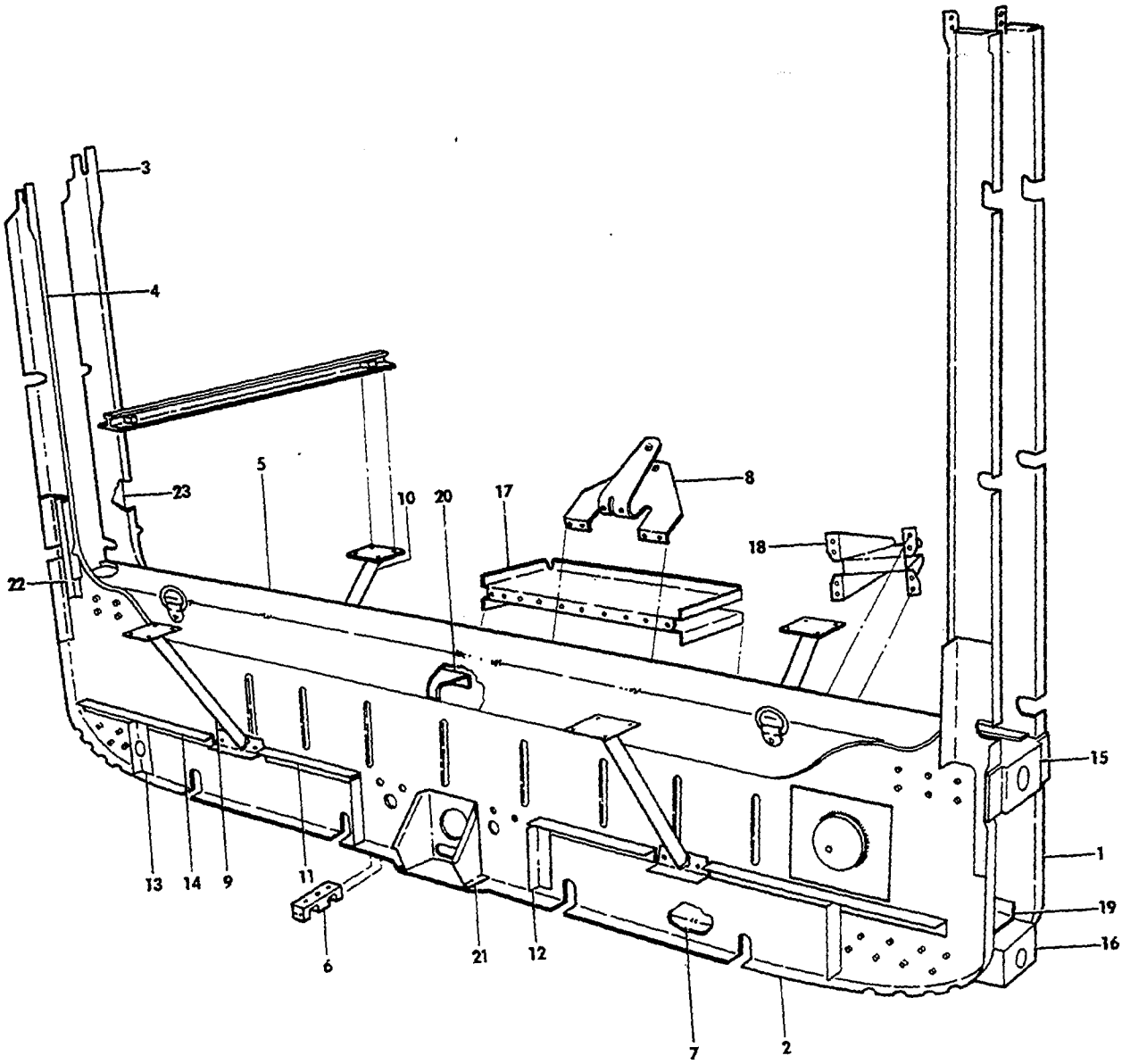

FIGURE 17-50.REAR SPAR CARRY THRU STRUCTURE
/SHEET 1 OF 2 SHEETS/

ATA CODE & INDEX NO.	PART NO.	DESCRIPTION 1 2 3 4 5 6 7	UNITS PER ASSY	USABLE ON CODE
17-50	95-420016-601	STRUCTURE ASSY,REAR SPAR CARRY THRU	1	14
- 1	95-420006-13	. BULKHEAD,FWD.	1	14
- 2	95-420006-11	. BULKHEAD,AFT.	1	14
- 3	95-420006-21	. REINFORCEMENT,LH FWD.	1	1
	96-420072	. REINFORCEMENT,LH FWD.	1	2
	95-420006-17	. REINFORCEMENT,RH FWD.	1	3
	96-420070	. REINFORCEMENT,RH FWD.	1	4
- 4	95-420006-19	. REINFORCEMENT,LH AFT.	1	5
	96-420071	. REINFORCEMENT,LH AFT.	1	6
	95-420006-15	. REINFORCEMENT,RH AFT.	1	3
	96-420069	. REINFORCEMENT,RH AFT.	1	4
- 5	95-420006-5	. CAP,UPPER	1	14
- 6	35-410258	. FITTING,REAR SPAR JACK PAD.	1	14
- 7	95-420006-31	. CAP,LOWER	1	14
- 8	35-410158-20	. BRACKET,PULLEY.	1	14
- 9	95-420016-9	. SUPPORT ASSY,LH AFT	1	14
	95-420016-10	. SUPPORT ASSY,RH AFT	1	14
- 10	95-420016-36	. SUPPORT ASSY,LH FWD	1	14
	95-420016-35	. SUPPORT ASSY,RH FWD	1	14
		/ATTACHING PARTS/		
	SLSP-T6-5	. HUCKBOLT.	8	
	6LC-C6	. COLLAR,HUCKBOLT	8	
		——*——		
- 11	95-420016-21	. ANGLE,LH.	1	14
	95-420016-22	. ANGLE,RH.	1	14
- 12	95-420016-19	. ANGLE,LH.	1	14
	95-420016-20	. ANGLE,RH.	1	14
- 13	95-420016-17	. ANGLE,LH.	1	14
	95-420016-18	. ANGLE,RH.	1	14
- 14	95-420016-25	. ANGLE,LH.	1	14
	95-420016-26	. ANGLE,RH.	1	14
- 15	35-410167	. FITTING,WING ATTACHMENT UPPER	2	14
- 16	95-420006-27	. FITTING,WING ATTACHMENT LOWER	2	14
	NAS1428-7	. LOCKPIN/SUPERSEDES SLSP-T8-7 HUCKBOLT/	40	14
	NAS1428-9	. LOCKPIN/SUPERSEDES SLSP-T8-9 HUCKBOLT/	16	14
	NAS1428-10	. LOCKPIN/SUPERSEDES SLSP-T8-10 HUCKBOLT/	8	14
	6LC-C8	. COLLAR,LOCKPIN.	64	14
- 17	35-410158-16	. BRACKET,PULLEY.	1	14
- 18	95-420006-33	. BRACKET,RH PULLEY	1	14
	95-420006-34	. BRACKET,LH PULLEY	1	14
	AN525-10R8	. SCREW	2	14
	AN960-10	. WASHER.	2	14
	MS20365-1032	. NUT	2	14
	AN392-23	. PIN	6	14
	AN380-2-2	. PIN,COTTER.	6	14
- 19	95-420006-29	. CHANNEL,LOWER	1	14
- 20	35-410158-12	. CHANNEL,UPPER	1	14
- 21	95-524000-1	. BRACKET,PULLEY.	1	14
- 22	95-420006-35	. ANGLE,LH AFT.	1	3
	58-420034-1	. ANGLE,LH AFT.	1	4
	95-420006-36	. ANGLE,RH AFT.	1	3
	58-420034-2	. ANGLE,RH AFT.	1	4
- 23	95-420006-37	. ANGLE,LH FWD.	1	3
	58-420034-2	. ANGLE,LH FWD.	1	4
	95-420006-38	. ANGLE,RH FWD.	1	3
	58-420034-1	. ANGLE,RH FWD.	1	4

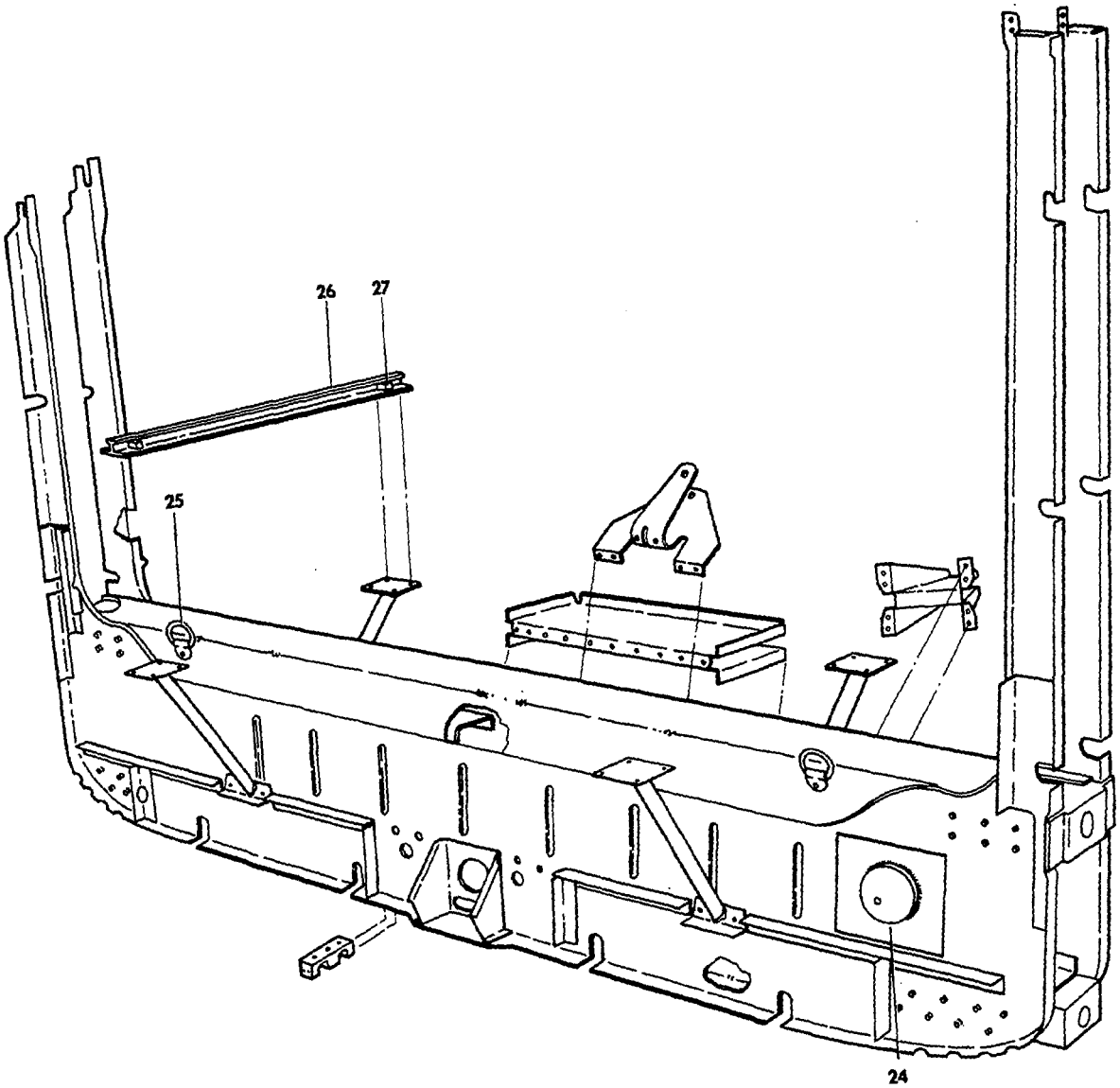

FIGURE 17-50.REAR SPAR CARRY THRU STRUCTURE
/SHEET 2 OF 2 SHEETS/

ATA CODE & INDEX NO.	PART NO.	DESCRIPTION 1 2 3 4 5 6 7	UNITS PER ASSY	USABLE ON CODE
17-50 - 24	95-420016-31	. WELD ASSY,HEAT DUCT	1	7
	95-420016-45	. WELD ASSY,HEAT DUCT	1	8
- 25	1954	. CLIP & DEE.	2	9
		/ATTACHING PARTS/		
	AN3-32	. BOLT.	1	
	AN960-10	. WASHER.	1	
	MS20365-1032	. NUT	1	
		----*----		
	AN227-9	. EYELET.	5	10
	AN227-8	. STUD.	5	10
- 26	95-420016-23	TRACK ASSY,REAR SPAR CARRY THRU	2	11
		/ATTACHING PARTS/		
	AN509-1032	SCREW	8	
	AN960-10	WASHER.	8	
	MS20365-1032	NUT	8	
	AN525-1032	SCREW	2	
	K1000-1032	NUTPLATE.	2	
		----*----		
	95-420016-39	TRACK ASSY,REAR SPAR CARRY THRU	2	12
		/ATTACHING PARTS/		
	AN525-1032R8	SCREW	6	
	AN960-10	WASHER.	4	
	MS20365-1032	NUT	4	
	AN509-1032R8	SCREW	4	
	MK2000-1032	NUTPLATE.	4	
	K1000-1032	NUTPLATE.	2	
		----*----		
- 27	414-180657-3	STOP,SEAT	4	14
	NAS221-1032	SCREW	2	14
	MS21042L3	NUT	2	14
	002-430013-31	STOP,SEAT/ADDITIONAL STOP/.	4	13
	MS27039-1-20	SCREW	2	13
	MS21042L3	NUT	2	13

CODES OF EFFECTIVITY

1	TC-1 THRU TC-1447 TE-1 THRU TE-896	2	TC-1448 THRU TC-1525 EXCEPT TC-1471
3	TC-1 THRU TC-1408 TE-1 THRU TE-858	4	TC-1409 THRU TC-1525 EXCEPT TC-1471 TE-859 THRU TE-896
5	TC-1 THRU TC-1447 TE-1 THRU TE-889	6	TC-1448 THRU TC-1525 EXCEPT TC-1471 TE-890 THRU TE-896
7	TC-1 THRU TC-260	8	TC-261 THRU TC-1525 EXCEPT TC-1471 TE-1 THRU TE-896
9	TC-1 THRU TC-351	10	TC-1 THRU TC-1344 TE-1 THRU TE-799
11	TC-1 THRU TC-190	12	TC-191 THRU TC-1525 EXCEPT TC-1471 TE-1 THRU TE-896
13	TC-191 THRU TC-1474 TC-1481 THRU TC-1489 TE-1 THRU TE-883	14	TC-1 THRU TC-1525 EXCEPT TC-1471 TE-1 THRU TE-896

"END"

53-17-52
REAR SPAR CARRY THRU
TC-1471,TC-1526 THRU TC-1607
TE-897 THRU TE-942 EXCEPT TE-938

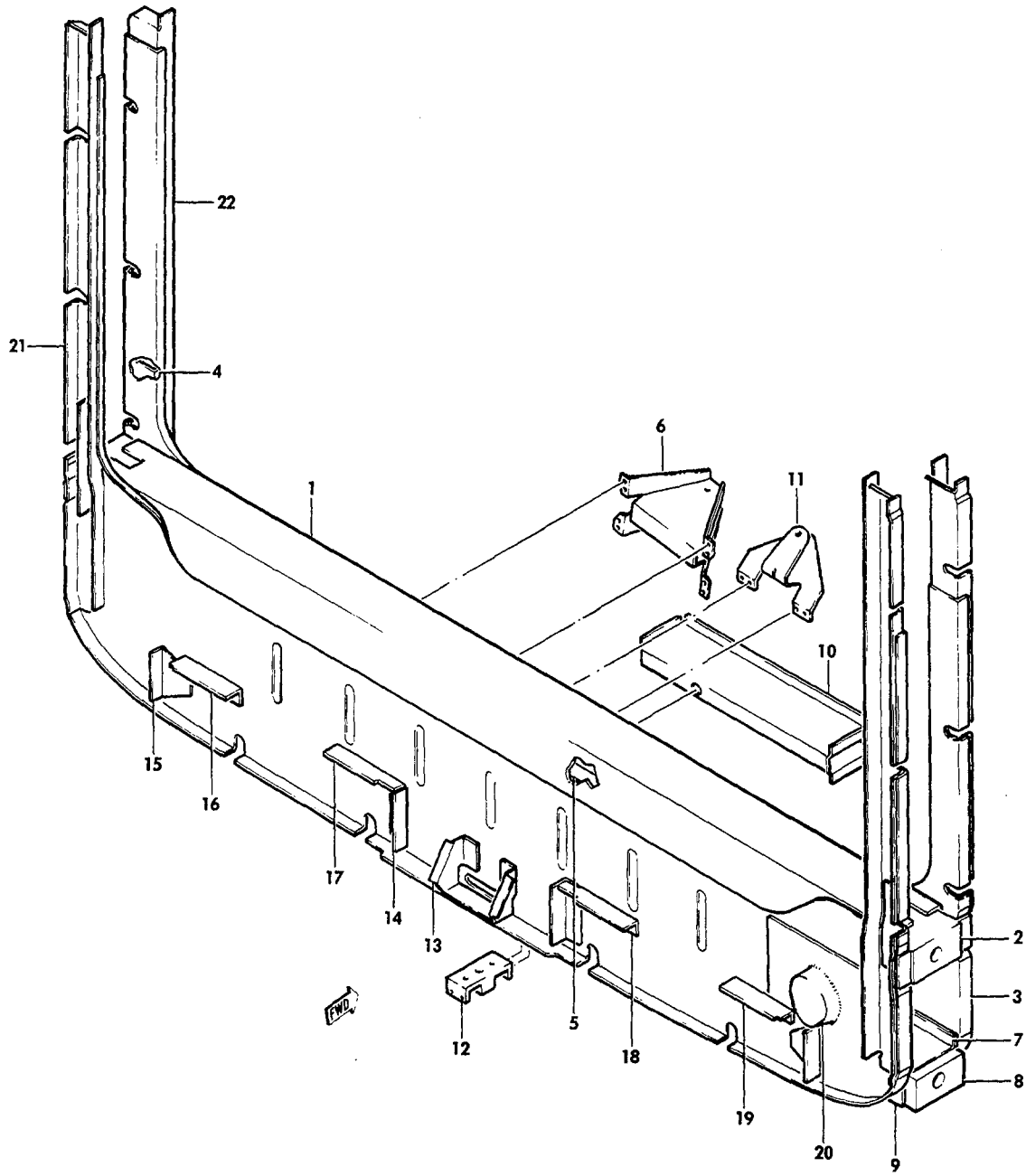

FIGURE 17-52.REAR SPAR CARRY THRU

ATA CODE & INDEX NO.	PART NO.	DESCRIPTION 1 2 3 4 5 6 7	UNITS PER ASSY	USABLE ON CODE
17-52	002-430026-5	CARRY THRU ASSY,REAR SPAR	1	1
- 1	002-430028-3	. CAP,UPPER SPAR.	1	1
- 2	002-430025-9	. FITTING,WING BOLT UPPER	2	1
- 3	002-430030-7	. WEB,FWD	1	1
	002-430030-3	. WEB,AFT	1	1
- 4	002-430026-33	. REINFORCEMENT,LH.	2	1
	002-430026-34	. REINFORCEMENT,RH.	2	1
- 5	002-430028-5	. CHANNEL,UPPER	1	1
- 6	002-430031-1	. BRACKET,LH FWD PULLEY	1	1
	002-430031-2	. BRACKET,RH FWD PULLEY	1	1
		/ATTACHING PARTS/		
	AN525-10R8	. SCREW	2	
	AN960-10	. WASHER.	2	
	MS21042L3	. NUT	2	
		----*----		
- 7	002-430028-11	. CHANNEL,LOWER	1	1
- 8	002-430025-7	. FITTING,WING BOLT LOWER	2	1
- 9	002-430028-7	. CAP,LOWER SPAR.	1	1
- 10	002-430032-5	. BRACKET,FWD PULLEY.	1	1
- 11	002-430032-3	. BRACKET,FWD PULLEY.	1	1
- 12	002-430026-27	. PAD,JACK.	1	1
- 13	002-430032-1	. BRACKET,AFT PULLEY.	1	1
- 14	002-430026-29	. ANGLE,LH AFT.	1	1
	002-430026-30	. ANGLE,RH AFT.	1	1
- 15	002-430026-31	. ANGLE,LH AFT.	1	1
	002-430026-32	. ANGLE,RH AFT.	1	1
- 16	002-430034-5	. ANGLE,FLOOR SUPPORT	1	1
- 17	002-430034-1	. ANGLE,FLOOR SUPPORT	1	1
- 18	002-430034-7	. ANGLE,FLOOR SUPPORT	1	1
- 19	002-430034-3	. ANGLE,FLOOR SUPPORT	1	1
- 20	002-430026-35	. DUCT.	1	1
	AN743-12	. CLIP.	2	1
- 21	002-430033-13	. REINFORCEMENT,LH AFT.	1	1
	002-430033-3	. REINFORCEMENT,RH AFT.	1	1
- 22	002-430033-9	. REINFORCEMENT,LH FWD.	1	1
	002-430033-7	. REINFORCEMENT,RH FWD.	1	1
	NAS1426-5	. LOCK-BOLT	8	1
	NAS1428-7	. LOCK-BOLT	36	1
	NAS1428-8	. LOCK-BOLT	28	1
	NAS1428-9	. LOCK-BOLT	16	1
	NAS1428-10	. LOCK-BOLT	8	1
	NAS1080C6	. COLLAR.	8	1
	NAS1080C8	. COLLAR.	88	1
	002-430022-1	SUPPORT,LH AFT TRACK.	1	1
	002-430022-2	SUPPORT,RH AFT TRACK.	1	1
	002-430022-19	SUPPORT,TRACK FWD	2	1
	002-430021-5	TRACK,SEAT.	2	1
	MS24694S50	SCREW	8	1
	AN960-10	WASHER.	4	1
	MS21042L3	NUT	4	1
	MS24694S51	SCREW	2	1
	002-430013-31	STOP,SEAT	2	1
	MS27039-1-20	SCREW	1	1
	MS21042L3	NUT	1	1
	002-430021-39	TRACK,SEAT.	4	1

CODES OF EFFECTIVITY

1 TC-1526 THRU TC-1607
AND TC-1471
TE-897 THRU TE-942
EXCEPT TE-938

"END"

53-18-01
AFT FUSELAGE STRUCTURE

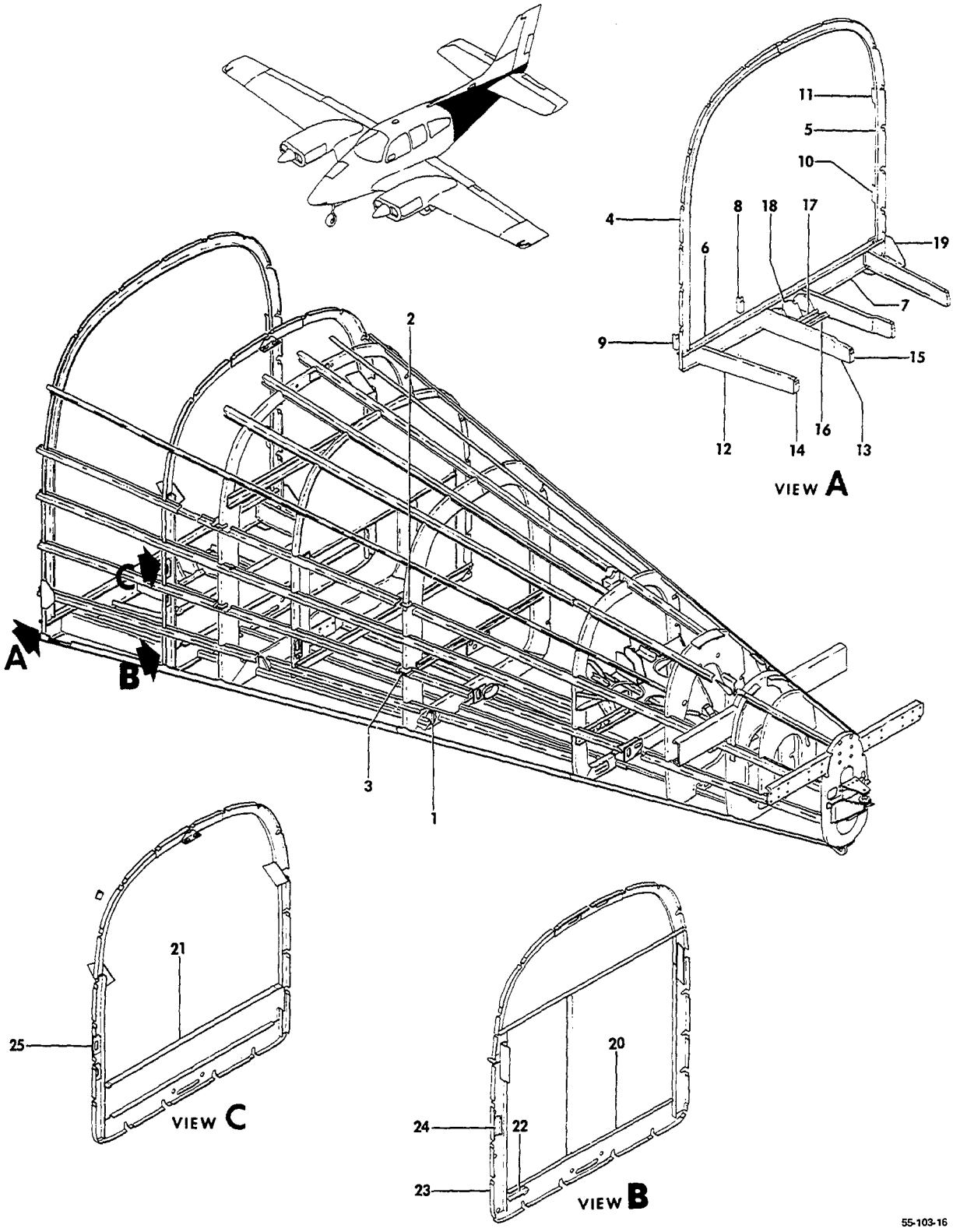

FIGURE 18-01.AFT FUSELAGE STRUCTURE
/SHEET 1 OF 6 SHEETS/

SUB-SECT UNIT & ITEM NO.	PART NO.	DESCRIPTION 1 2 3 4 5 6 7	UNITS PER ASSY	USABLE ON CODE
18-01	96-440000	FUSELAGE STRUCTURE,AFT/STA 151 TO 272/.	1	1
	96-440000-147	FUSELAGE STRUCTURE,AFT/STA 151 TO 272/. . . . . /WITH UTILITY BAGGAGE DOOR/	1	2
	96-440001	FUSELAGE STRUCTURE,AFT/STA 151 TO 272/. . . . . /WITH BAGGAGE COMPARTMENT/	1	20
	96-440001-77	FUSELAGE STRUCTURE,AFT/STA 151 TO 272/. . . . . /WITH UTILITY BAG.DOOR AND BAG.COMPT/	1	20
	96-440001-79	FUSELAGE STRUCTURE,AFT/STA 151 TO 272/. . . . . /WITH BAGGAGE COMPARTMENT/	1	3
	96-440001-81	FUSELAGE STRUCTURE,AFT/STA 151 TO 272/. . . . . /WITH UTILITY BAG.DOOR AND BAG.COMPT/	1	3
- 1	35-410369-2	. GUSSET,LH/STA 207 STRINGER J/	1	4
	35-410369-3	. GUSSET,RH/STA 207 STRINGER J/	1	4
- 2	35-410369-4	. GUSSET,LH/STA 207 STRINGER E/	1	4
	35-410369-5	. GUSSET,RH/STA 207 STRINGER E/	1	4
- 3	35-410369-6	. GUSSET,LH/STA 207 STRINGER G/	1	4
	35-410369-7	. GUSSET,RH/STA 207 STRINGER G/	1	8
	95-440006-614	. BULKHEAD ASSY/STA 151/.	1	4
	95-440006-167	. . CHANNEL,LOWER LH.	1	5
- 4	R 002-430012-9	. . CHANNEL,LOWER LH/SUPERSEDES 002-430011-1/ .	1	6
- 5	95-440006-169	. . CHANNEL,LOWER RH/USED W/O BAG.DOOR/	1	4
	96-420016-121	. . CHANNEL,LOWER RH/USED WITH BAG.DOOR/. . . .	1	7
- 6	95-440006-41	. . ANGLE,UPPER BOTTOM.	1	4
	35-400473-43	. . ANGLE,LOWER BOTTOM.	1	16
- 7	95-440006-43	. . CHANNEL,BOTTOM.	1	4
- 8	95-440006-47	. . ANGLE,LH BOTTOM INBD.	1	4
	95-440006-48	. . ANGLE,RH BOTTOM INBD.	1	4
- 9	95-440006-49	. . ANGLE,LH BOTTOM OUTBD	1	4
	95-440006-50	. . ANGLE,RH BOTTOM OUTBD	1	4
- 10	95-440006-135	. . ANGLE,RH LOWER SIDE/USED W/O BAG.DOOR/. . .	1	4
- 11	35-410160-32	. . ANGLE,RH UPPER SIDE/USED W/O BAG.DOOR/. . .	1	4
- 12	95-440006-35	. CHANNEL,LH OUTBD.	1	4
	95-440006-36	. CHANNEL,RH OUTBD.	1	15
	35-400473-23	. CHANNEL,RH OUTBD.	1	16
- 13	95-440006-25	. CHANNEL,LH INBD	1	4
	95-440006-26	. CHANNEL,RH INBD	1	4
- 14	95-440006-37	. ANGLE,LH/STA 170 OUTBD/	1	4
	95-440006-38	. ANGLE,RH/STA 170 OUTBD/	1	4
- 15	95-440006-29	. ANGLE,LH/STA 170 INBD/.	1	4
	95-440006-30	. ANGLE,RH/STA 170 INBD/.	1	4
- 16	95-440006-89	. ANGLE/STA 151/.	1	4
- 17	95-440006-91	. ANGLE/STA 151/.	1	4
- 18	35-410015	. BRACKET,PULLEY LH/STA 151/WITH BAG.COMPT/ . .	1	7
	35-410015-1	. BRACKET,PULLEY RH/STA 151/WITH BAG.COMPT/ . .	1	7
- 19	95-440006-105	. DOUBLER	1	4
	96-440000-25	. BULKHEAD ASSY/WITHOUT BAGGAGE COMPT/STA 170/.	1	8
	96-440000-149	. BULKHEAD ASSY/WITHOUT BAGGAGE COMPT/STA 170/.	1	19
	96-440001-5	. BULK HEAD ASSY,LOWER/WITH BAG.COMPT/STA 170/.	1	7
	96-440001-13	. BULKHEAD ASSY,UPPER/WITH BAG.COMPT/STA 170/ .	1	7
- 20	96-440000-123	. . CHANNEL	1	4
- 21	002-440000-61	. . WEB/WITH BAGGAGE COMPARTMENT/	1	7
- 22	95-440006-7	. . ANGLE	1	4
	95-440006-175	. . CHANNEL,LH/WITHOUT BAGGAGE COMPARTMENT/ . .	1	8
- 23	95-440006-205	. . CHANNEL,LH/WITHOUT BAGGAGE COMPARTMENT/ . .	1	19
	96-440001-65	. . CHANNEL,LH/WITH BAGGAGE COMPARTMENT/. . . .	1	7
	95-440006-176	. . CHANNEL,RH/WITHOUT BAGGAGE COMPARTMENT/ . .	1	8
	95-440006-204	. . CHANNEL,RH/WITHOUT BAGGAGE COMPARTMENT/ . .	1	8
	96-440001-66	. . CHANNEL,RH/WITH BAGGAGE COMPARTMENT/. . . .	1	7
- 24	95-440006-3	. . ANGLE,LH/WITHOUT BAGGAGE COMPARTMENT/ . . .	1	1
	58-440022-17	. . ANGLE,LH LOWER/WITH BAGGAGE COMPARTMENT/. .	1	7
	58-440022-19	. . ANGLE,LH UPPER/WITH BAGGAGE COMPARTMENT/. .	1	7
	95-440006-4	. . ANGLE,RH.	1	4
- 25	96-440022-2	. . REINFORCEMENT/WITH BAGGAGE COMPARTMENT/ . .	2	7

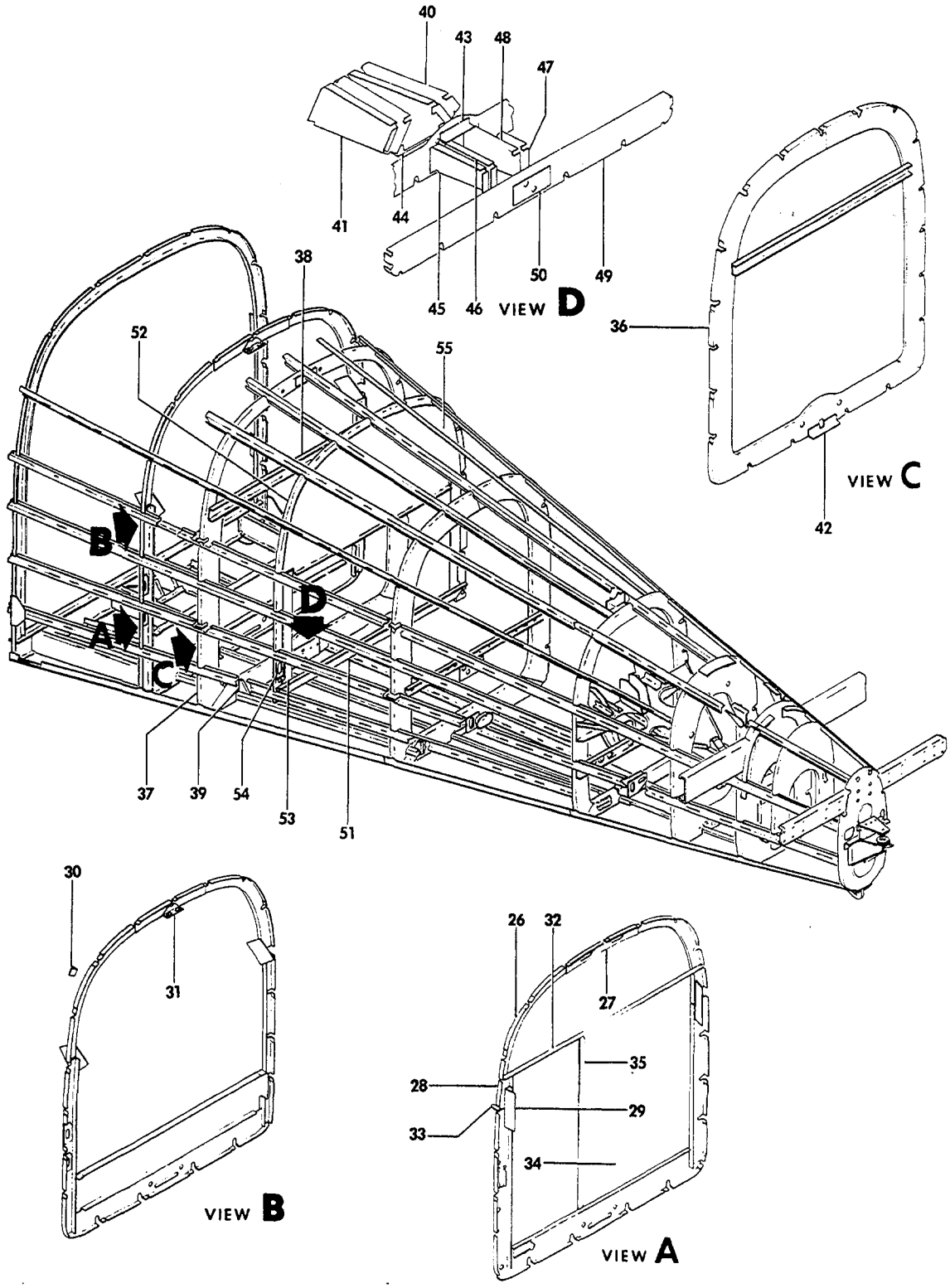

FIGURE 18-01.AFT FUSELAGE STRUCTURE
/SHEET 2 OF 6 SHEETS/

SUB-SECT UNIT & ITEM NO.	PART NO.	DESCRIPTION 1 2 3 4 5 6 7	UNITS PER ASSY	USABLE ON CODE
18-01 - 26	95-440006-111	. . ZEE,LH/WITHOUT BAGGAGE COMPARTMENT/	1	10
	96-440001-15	. . ZEE,LH/WITH BAGGAGE COMPARTMENT/.	1	9
	002-430035-3	. . BULKHEAD/SINGLE PIECE LH AND RH/. . . . . /WITH OR WITHOUT BAGGAGE COMPARTMENT/	1	6
	95-440006-9	. . ZEE,RH/WITHOUT BAGGAGE COMPARTMENT/	1	10
	96-440001-17	. . ZEE,RH/WITH BAGGAGE COMPARTMENT/.	1	9
- 27	95-440006-223	. . DOUBLER/WITHOUT BAGGAGE COMPARTMENT/. . . .	1	10
	96-440001-83	. . DOUBLER/WITH BAGGAGE COMPARTMENT/	1	9
- 28	95-440006-205	. . CHANNEL,LH/WITHOUT BAGGAGE COMPARTMENT/ . .	1	11
	96-440024-1	. . CHANNEL,LH/WITHOUT BAGGAGE COMPARTMENT/ . .	1	12
	95-440006-206	. . CHANNEL,RH/WITHOUT BAGGAGE COMPARTMENT/ . .	1	11
	96-440024-2	. . CHANNEL,RH/WITHOUT BAGGAGE COMPARTMENT/ . .	1	12
	96-430010-47	. . ANGLE,LH AND RH/WITH BAGGAGE COMPARTMENT/ .	2	7
- 29	95-440006-207	. . CHANNEL,LH AND RH/WITHOUT BAGGAGE COMPT/. .	2	1
- 30	58-440022-23	. . CLIP/WITH BAGGAGE COMPARTMENT/.	4	7
- 31	58-440022-27	. . CLIP/WITH BAGGAGE COMPARTMENT/.	1	7
- 32	95-440006-21	. . ANGLE/WITHOUT BAGGAGE COMPARTMENT/.	1	1
	SL211-08-1	. . CLIP NUT.	6	1
- 33	108424-4	. . CLIP.	2	19
	R 95-440006-19	. . PANEL,ACCESS/WITHOUT BAGGAGE COMPARTMENT/ .	1	8
	95-440006-17	. . STIFFENER	1	8
	95-440006-257	. . PANEL ASSY,ACCESS/WITHOUT BAGGAGE COMPT/. .	1	11
- 34	95-440006-259	. . . PANEL ACCESS.	1	11
- 35	95-440006-231	. . . STIFFENER	1	11
	95-440006-15	. . WEB	1	8
	95-440006-23	. . SEAL/LH AND RH SIDE OF -19 ACCESS PANEL/. .	2	8
	95-440006-113	. . SEAL/TOP AND BOTTOM OF -19 ACCESS PANEL/. .	2	8
	95-440006-233	. . SEAL/LH AND RH SIDE OF -257 ACCESS PANEL/ .	2	11
	95-440006-235	. . SEAL/TOP AND BOTTOM OF -257 ACCESS PANEL/ .	2	11
	AN515-6R6	. . SCREW/ACCESS PANEL ATTACHING/	30	1
	96-440000-9	. BULKHEAD ASSY/STA 179/WITHOUT BAGGAGE COMPT/.	1	1
	96-440001-25	. BULKHEAD ASSY/STA 179/WITH BAGGAGE COMPT/ . .	1	7
- 36	95-440006-189	. . FRAME/WITH OR WITHOUT BAGGAGE COMPARTMENT/.	1	4
- 37	96-440000-3	. . FRAME,LH/WITHOUT BAGGAGE COMPARTMENT/ . . .	1	1
	96-440001-27	. . FRAME,LH/WITH BAGGAGE COMPARTMENT/.	1	7
	96-440000-5	. . FRAME,RH/WITHOUT BAGGAGE COMPARTMENT/ . . .	1	1
	96-440001-29	. . FRAME,RH/WITH BAGGAGE COMPARTMENT/.	1	7
- 38	96-400000-61	. . CHANNEL/WITHOUT BAGGAGE COMPARTMENT/. . . .	1	1
- 39	35-410370	. GUSSET,LH/WITH BAGGAGE COMPARTMENT/	2	7
	35-410370-1	. GUSSET,RH/WITH BAGGAGE COMPARTMENT/	2	7
- 40	96-524012-9	. BRACKET,RH PULLEY	1	4
- 41	96-524012-11	. BRACKET,LH PULLEY	1	4
- 42	95-440006-99	. ANGLE/STA 179/.	1	4
- 43	96-524012-17	. ANGLE/STA 179/.	1	4
- 44	96-524012-19	. ANGLE/STA 179/.	1	4
- 45	96-524012-1	. BRACKET,LH/OUTBD/	1	4
- 46	96-524012-3	. BRACKET,LH/INBD/.	1	4
- 47	96-524012-5	. BRACKET,RH/OUTBD/	1	4
- 48	96-524012-7	. BRACKET,RH/INBD/.	1	4
- 49	96-524012-13	. BRACKET	1	4
- 50	96-524012-15	. FAIRLEAD.	1	4
	58-440030-1	. BULKHEAD ASSY/STA 190/THIS BULKHEAD ASSY USED ONLY ON AIRCRAFT WITH BAGGAGE COMPT/	1	7
- 51	96-440001-41	. . SUPPORT	1	7
	SL201-5AA11	. . CLIP NUT.	4	7
	58-440028-5	. . SEAL.	1	7
- 52	96-440001-33	. . FRAME,LH.	1	7
	96-440001-35	. . FRAME,RH.	1	7
- 53	96-440001-69	. . STRIP	2	7
- 54	96-440022-1	. . REINFORCEMENT,LH FRAME.	1	7
- 55	58-440030-3	. . WEB	1	7
	NAS1329A08K75	. . RIVNUT/IN BULKHEAD WEB/	5	7

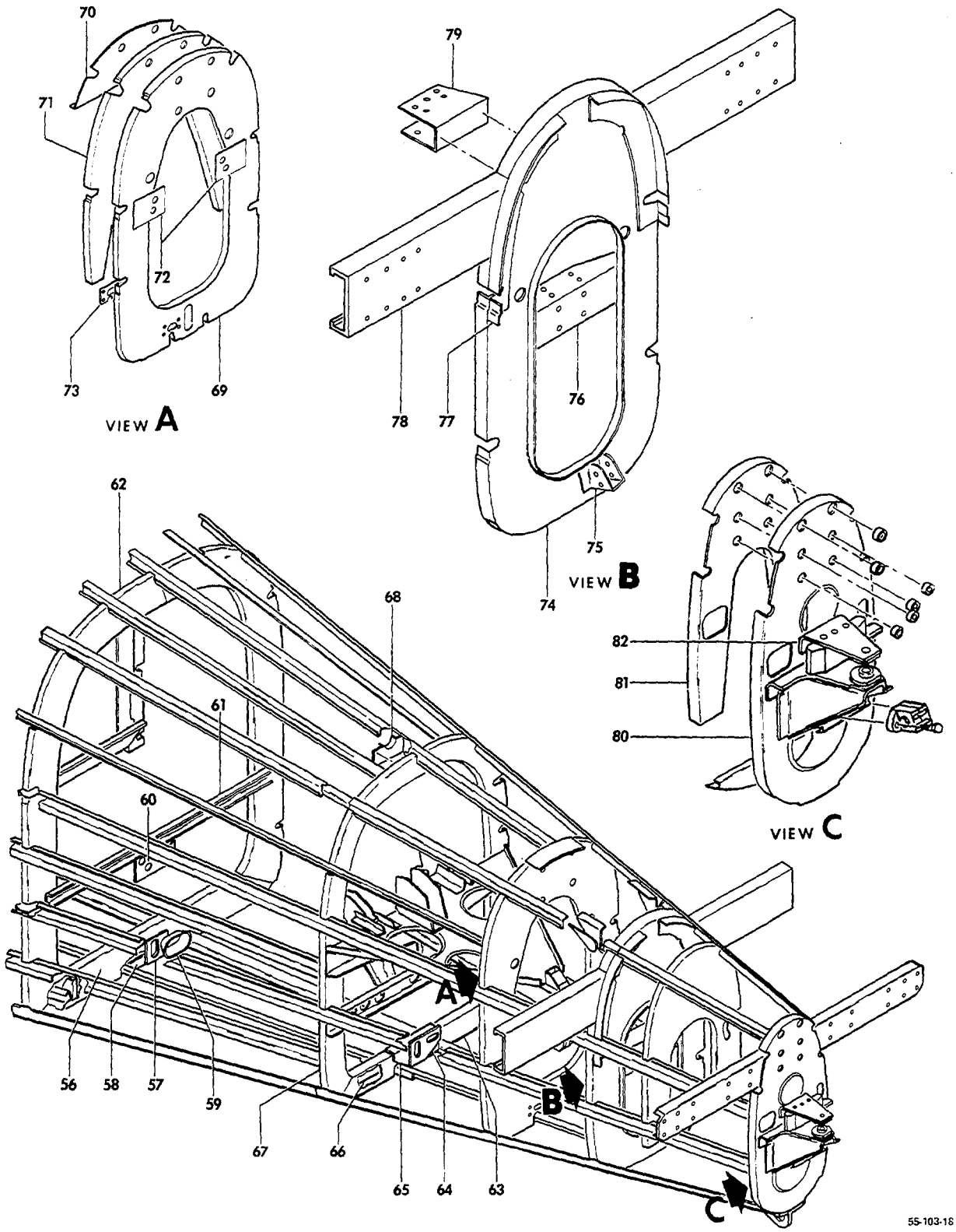

FIGURE 18-01. AFT FUSELAGE STRUCTURE
/SHEET 3 OF 6 SHEETS/

ATA CODE & INDEX NO.	PART NO.	DESCRIPTION 1 2 3 4 5 6 7	UNITS PER ASSY	USABLE ON CODE
18-01	96-440000-83	. BULKHEAD ASSY/STA 207/.	1	4
- 56	96-440000-81	. . CHANNEL	1	4
- 57	96-440000-79	. . FAIRLEAD.	1	4
- 58	96-440000-77	. . ANGLE	1	4
- 59	96-440000-127	. . FAIRLEAD.	1	4
	96-440000-133	. . CHANNEL ASSY.	1	4
- 60	96-440000-129	. . . FAIRLEAD.	1	4
- 61	96-440000-131	. . . CHANNEL	1	4
- 62	95-430005-41	. . FRAME,LH BULKHEAD	1	4
	95-430005-45	. . FRAME,RH BULKHEAD	1	4
	96-440000-31	. BULKHEAD ASSY/STA 233.5/.	1	4
- 63	96-440000-115	. . CHANNEL	1	4
- 64	96-440000-121	. . FAIRLEAD.	1	4
- 65	96-440000-119	. . REINFORCEMENT	1	4
- 66	33-440022	. . REINFORCEMENT	1	4
- 67	95-440006-145	. . FRAME,LH.	1	4
	95-440006-147	. . FRAME,RH.	1	4
- 68	33-440026	. . SPLICE.	1	4
	96-440000-39	. BULKHEAD ASSY/STA 247.83/	1	13
	96-440000-101	. BULKHEAD ASSY/STA 247.83/	1	14
	96-440000-69	. . BULKHEAD.	1	13
- 69	96-440000-95	. . BULKHEAD.	1	14
	96-440000-71	. . DOUBLER	1	13
- 70	96-440000-97	. . DOUBLER	1	14
	96-440000-73	. . DOUBLER	1	13
- 71	96-440000-99	. . DOUBLER	1	14
- 72	96-440000-111	. . GUIDE	2	4
- 73	96-440000-85	. . FAIRLEAD.	1	4
	95-440013-45	. STUB INSTL,HORIZONTAL STABILIZER.	NP	1
	95-440013-89	. STUB INSTL,HORIZONTAL STABILIZER.	NP	3
	95-440013-57	. . BULKHEAD ASSY/STA 257.606/.	1	1
	95-440013-91	. . BULKHEAD ASSY/STA 257.606/.	1	3
- 74	95-440013-55	. . . WEB	1	1
	95-440013-95	. . . WEB	1	3
- 75	95-440013-85	. . . BRACKET	1	4
- 76	95-440013-47	. . . CHANNEL	1	4
- 77	95-440013-77	. . . ANGLE,LH.	1	1
	95-440013-97	. . . ANGLE,LH.	1	3
	95-440013-78	. . . ANGLE,RH.	1	1
	95-440013-98	. . . ANGLE,RH.	1	3
- 78	95-440013-53	. . . SPAR.	1	1
	95-440013-93	. . . SPAR.	1	3
- 79	95-440013-103	. . . BRACKET	1	4
	115005-1	. . . GROMMET	2	1
	MS21266-2N	. . . GROMMET	2	3
	ALSF-T8-5	. . . HUCKBOLT.	4	4
	ALSF-T8-4	. . . HUCKBOLT.	4	4
	LC-C8	. . . COLLAR,HUCKBOLT	8	4
	95-440013-37	. . BULKHEAD ASSY/STA 272/.	1	1
	95-440013-99	. . BULKHEAD ASSY/STA 272/.	1	3
- 80	95-440013-33	. . . WEB	1	4
- 81	95-440013-35	. . . DOUBLER	1	4
- 82	95-440013-61	. . . BRACKET ASSY.	1	4
		/ATTACHING PARTS/		
	AN3-5A	. . . BOLT.	2	
	AN960-10	. . . WASHER.	2	
	AN364-1032	. . . NUT	2	
		——*——		
	95-440013-59	. . . . BRACKET	1	4
	95-440013-65	. . . . BOSS.	1	4

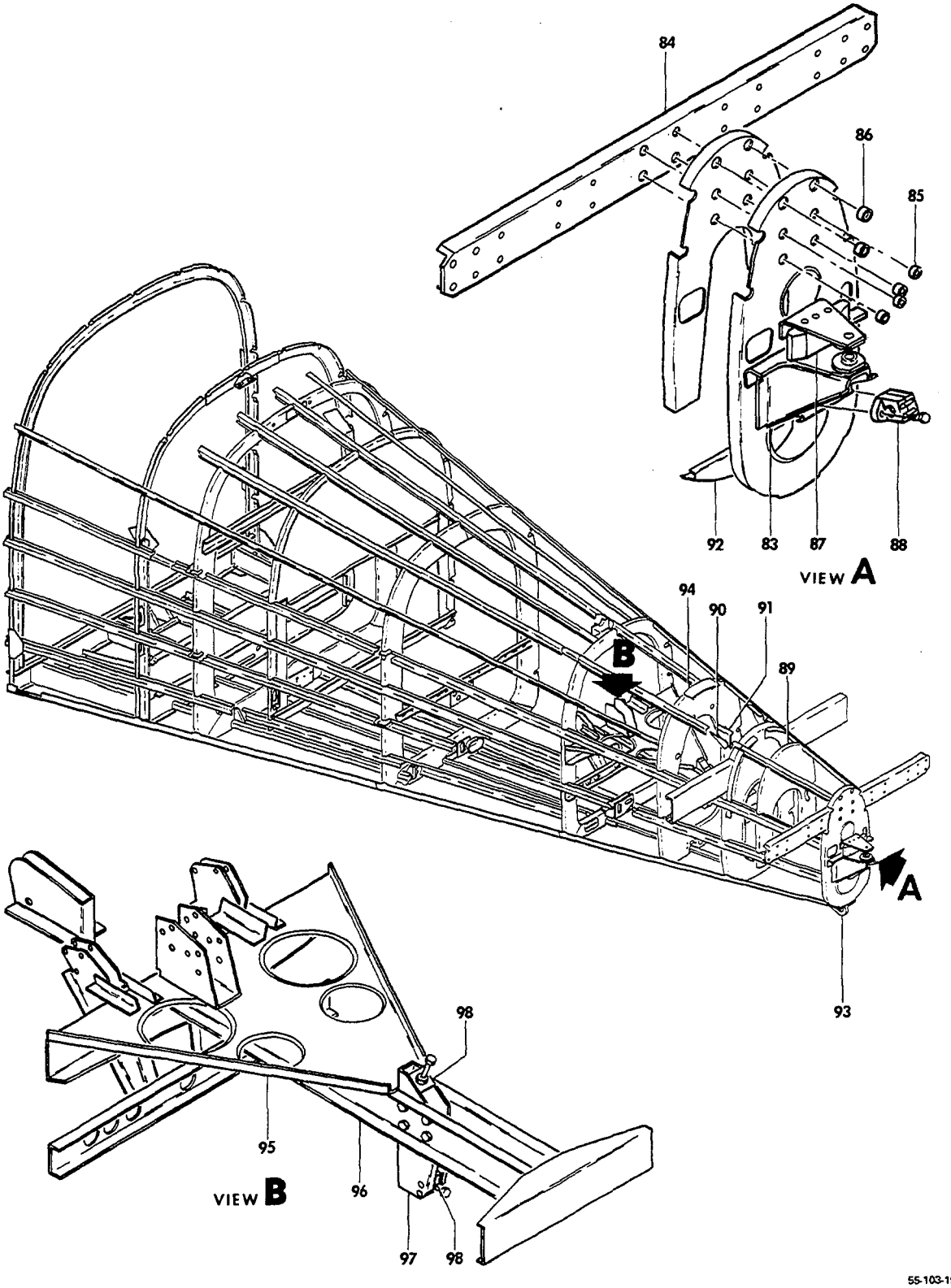

FIGURE 18-01. AFT FUSELAGE STRUCTURE
/SHEET 4 OF 6 SHEETS/

ATA CODE & INDEX NO.	PART NO.	DESCRIPTION 1 2 3 4 5 6 7	UNITS PER ASSY	USABLE ON CODE
18-01 - 83	95-440013-71	. . . BRACKET ASSY.	1	4
		/ATTACHING PARTS/		
	AN3-5A	. . . BOLT.	2	
	AN960-10	. . . WASHER.	2	
	AN364-1032	. . . NUT	2	
		——*——		
	95-440013-67	. . . . BRACKET	1	4
	95-440013-65	. . . . BOSS.	1	4
	95-440013-69	. . . . BRACKET	1	4
	95-440013-87	. . . . BRACKET	1	4
- 84	95-440013-81	. . . SPAR.	1	4
	AN366F1032	. . . NUTPLATE.	8	4
	95-440013-101	. . . SHIM.	1	3
- 85	45-620011-4	. . . BUSHING	4	4
- 86	96-620010-3	. . . BUSHING	2	4
	ALSF-T8-5	. . . HUCKBOLT.	4	1
	ALSF-T8-7	. . . HUCKBOLT.	4	3
	LC-C8	. . . COLLAR,HUCKBOLT	4	4
- 87	95-440013-73	. . . BLOCK	1	4
		/ATTACHING PARTS/		
	AN509-1032-30	. . . SCREW	3	
	AN960-10	. . . WASHER.	3	
	MS20365-1032	. . . NUT	3	
		——*——		
- 88	35-660033	. . . FAIRLEAD.	2	4
		/ATTACHING PARTS/		
	AN3-5	. . . BOLT.	2	
	AN3-10	. . . BOLT.	1	
	AN960-10	. . . WASHER.	3	
	AN365-1032	. . . NUT	3	
		——*——		
- 89	96-440000-139	. BULKHEAD/STA 262.90/.	1	4
- 90	33-410031-123	. BRACKET,ELEVATOR SPRING ANCHOR/LH/.	1	4
	33-410031-124	. BRACKET,ELEVATOR SPRING ANCHOR/RH/.	1	4
- 91	33-410031-125	. BRACKET,ELEVATOR SPRING ANCHOR/LH/.	1	4
	33-410031-126	. BRACKET,ELEVATOR SPRING ANCHOR/LH/.	1	4
- 92	35-410023	. BRACKET,SUPPORT/STA 268.61/	1	4
- 93	35-400213	. LUG,TIE DOWN.	1	4
		/ATTACHING PARTS/		
	AN507-1032	. BOLT.	4	
	AN960-10L	. WASHER.	4	
	AN365-1032	. NUT	4	
		——*——		
- 94	96-440000-1	. DOUBLER	1	4
	58-440025	. SUPPORT INSTL,BELLCRANK	NP	4
- 95	33-440032-3	. . REINFORCEMENT	1	4
- 96	96-440000-33	. . CHANNEL,LH.	1	4
	96-440000-34	. . CHANNEL,RH.	1	4
- 97	58-524026	. . BRACKET	1	4
		/ATTACHING PARTS/		
	AN3-3A	. . BOLT.	8	
	AN960-10	. . WASHER.	8	
	MS20365-1032	. . NUT	8	
		——*——		
- 98	33-440034	. . BLOCK,STOP.	2	4
		/ATTACHING PARTS/		
	AN525-832-24	. . SCREW	4	
	AN960-8	. . WASHER.	4	
	MS20365-832	. . NUT	4	
		——*——		

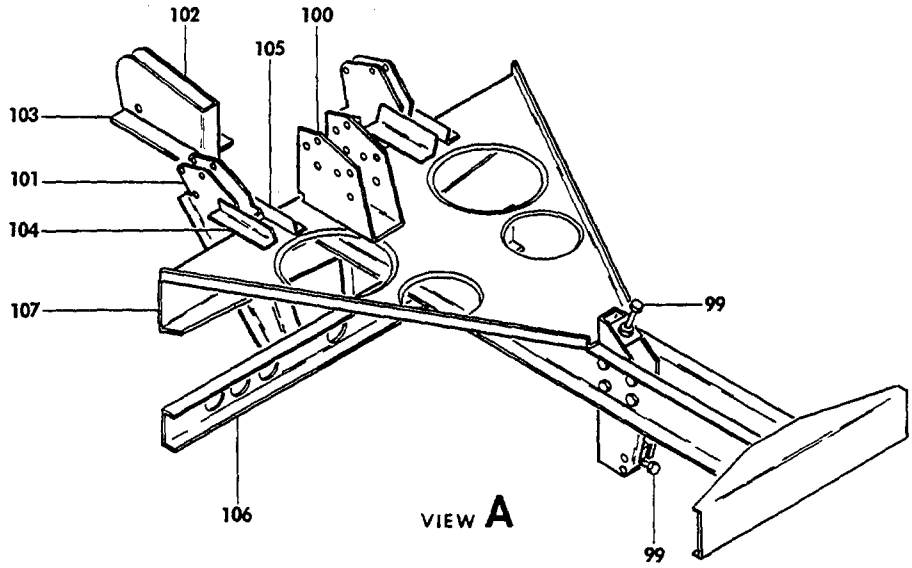

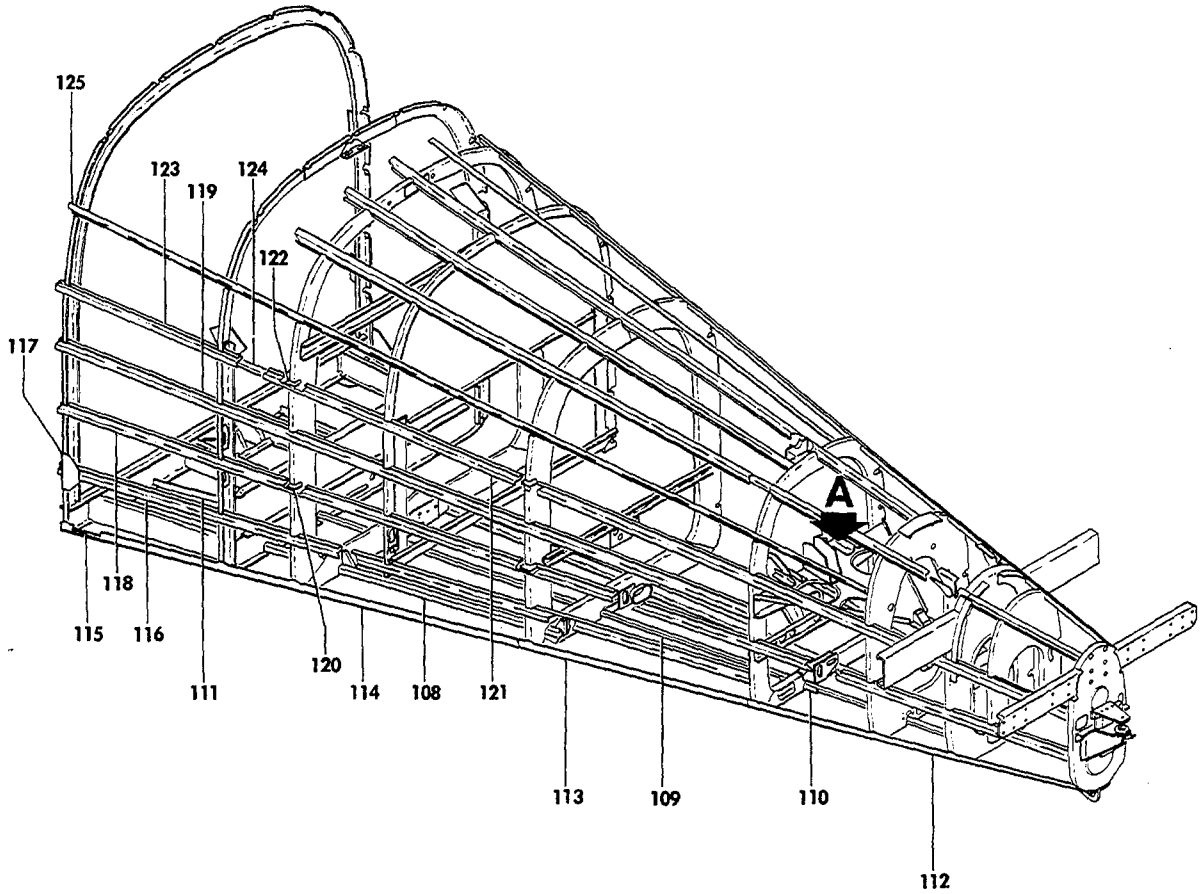

55-103-20

FIGURE 18-01.AFT FUSELAGE STRUCTURE
/SHEET 5 OF 6 SHEETS/

SUB-SECT UNIT & ITEM NO.	PART NO.	DESCRIPTION 1 2 3 4 5 6 7	UNITS PER ASSY	USABLE ON CODE
18-01 - 99	NAS428H-4-14	. . BOLT,STOP ADJUST.	2	4
	AN316-4R	. . NUT	2	4
-100	58-440027	. . BRACKET,PULLEY.	1	4
-101	96-440000-107	. . BRACKET,PULLEY.	2	4
-102	96-440000-27	. . BRACKET,PULLEY.	1	1
-103	R 96-440000-29	. . ANGLE,LH.	1	4
	96-440000-30	. . ANGLE,RH.	1	4
-104	96-440000-103	. . ANGLE,LH OUTBD.	1	4
	96-440000-106	. . ANGLE,RH OUTBD.	1	4
-105	96-440000-105	. . ANGLE,LH INBD	1	4
	96-440000-104	. . ANGLE,RH INBD	1	4
-106	96-440000-109	. . CHANNEL	1	4
-107	96-440000-113	. . CHANNEL	1	4
-108	95-430005-23	. STRINGER,LH/J/.	1	4
	95-430005-24	. STRINGER,RH/J/.	1	4
-109	96-440001-169	. STRINGER,LH/K/.	1	4
	96-440001-170	. STRINGER,RH/K/.	1	4
-110	95-440006-133	. ANGLE/STA 233.50/	2	4
-111	33-420000-5	. STIFFENER,LH/STA 151 TO 170/.	1	4
	33-420000-6	. STIFFENER,RH/STA 151 TO 170/.	1	4
-112	95-440005-73	. STRINGER,LH/STA 232.78 TO 271.88/I/	1	4
	95-440005-74	. STRINGER,RH/STA 232.78 TO 271.88/I/	1	4
-113	95-430005-19	. STRINGER,LH/STA 206.30 TO 233.50/I/	1	4
	95-430005-20	. STRINGER,RH/STA 206.30 TO 233.50/I/	1	4
-114	95-440006-125	. STRINGER,LH/STA 148.25 TO 207.54/I/	1	4
	95-440006-126	. STRINGER,RH/STA 148.25 TO 207.54/I/	1	4
-115	95-430005-75	. CHANNEL,LH/WITH BAG.COMPT/.	1	7
	95-430005-79	. CHANNEL,RH/WITH BAG.COMPT/.	1	7
	AN515-8R12	. SCREW	1	7
	AN366F832	. NUTPLATE.	1	7
-116	95-430005-17	. STRINGER,LH/STA 148.75 TO 233.38/H/	1	4
	95-430005-18	. STRINGER,RH/STA 148.75 TO 233.38/H/	1	4
-117	95-430005-77	. GUSSET/WITH BAGGAGE COMPARTMENT/STA 151/. . .	2	7
-118	95-440006-57	. STRINGER,LH/STA 148.75 TO 271.88/G/	1	4
	95-440006-58	. STRINGER,RH/STA 148.75 TO 271.88/G/	1	4
-119	95-430005-13	. STRINGER,LH/STA 148.75 TO 233.38/F/	1	4
	95-430005-14	. STRINGER,RH/STA 148.75 TO 233.38/F/	1	4
-120	96-440001-43	. GUSSET,LH/WITH BAG COMPT/STA 179/	1	7
	96-440001-44	. GUSSET,RH/WITH BAG COMPT/STA 179/	1	7
-121	95-440006-55	. STRINGER,LH/STA 173 TO 271.88/E/.	1	4
	95-440006-56	. STRINGER,RH/STA 173 TO 271.88/E/.	1	4
-122	96-440001-63	. REINFORCEMENT,LH/WITH BAGGAGE COMPARTMENT/. .	1	7
	96-440001-64	. REINFORCEMENT,RH/WITH BAGGAGE COMPARTMENT/. .	1	7
-123	95-440006-161	. STRINGER,LH/STA 149.50 TO 172.94/E/	1	4
-124	95-420015-129	. SPLICE,STRINGER/WITHOUT BAGGAGE COMPARTMENT/.	2	1
	95-440006-53	. STRINGER,LH/WITHOUT BAGGAGE COMPARTMENT/. . . /STA 148.75 TO 247.83/D/	1	1
-125	96-430010-37	. STRINGER,LH/WITH BAGGAGE COMPARTMENT/ . . . . /STA 170 TO 248.69/D/	1	7
	95-440006-54	. STRINGER,RH/WITH OUT BAGGAGE COMPARTMENT/ . . /STA 148.75 TO 247.83/D/	1	1
	96-430010-38	. STRINGER,RH/WITH BAGGAGE COMPARTMENT/ . . . . /STA 170 TO 248.69/D/	1	7

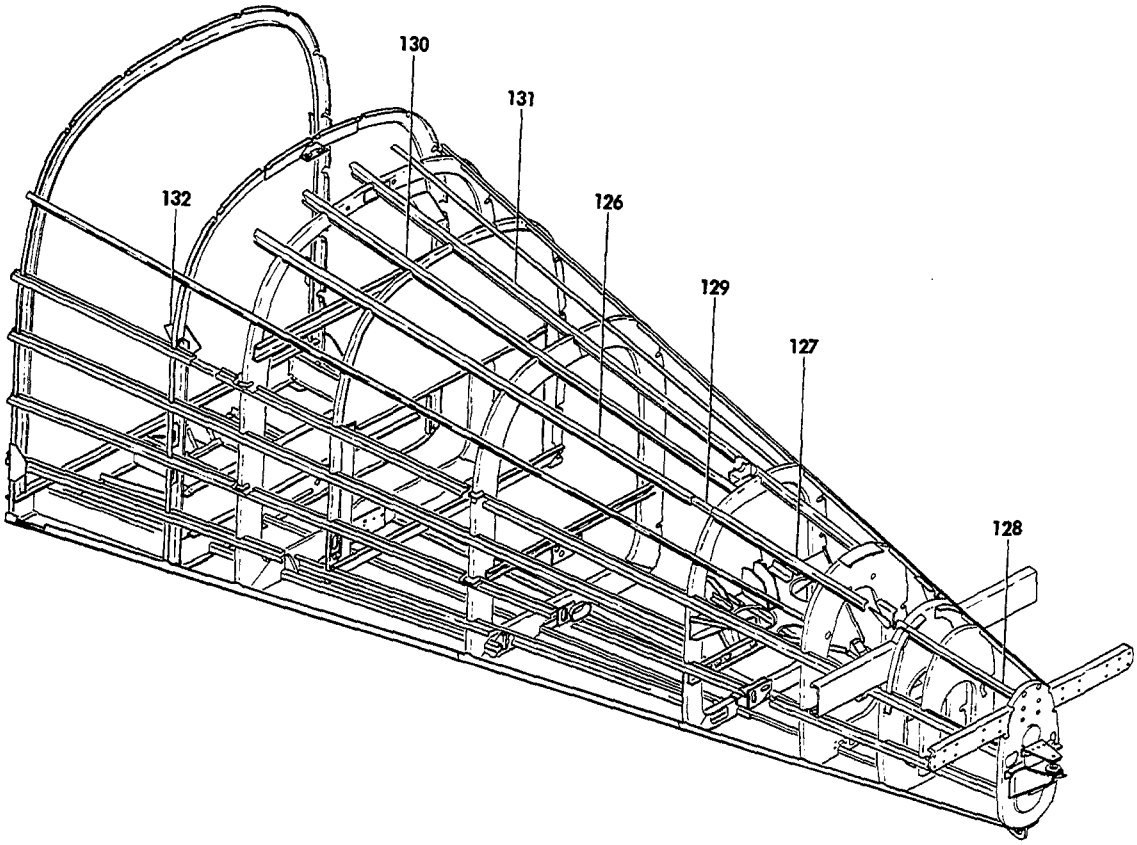

55-103-21

FIGURE 18-01.AFT FUSELAGE STRUCTURE
/SHEET 6 OF 6 SHEETS/

SUB-SECT UNIT & ITEM NO.	PART NO.	DESCRIPTION 1 2 3 4 5 6 7	UNITS PER ASSY	USABLE ON CODE
18-01	95-430005-7	. STRINGER,LH/STA 174.56 TO 233.50/C/	1	17
-126	95-440006-197	. STRINGER,LH/STA 174.56 TO 233.50/C/	1	18
	95-430005-8	. STRINGER,RH/STA 174.56 TO 233.50/C/	1	17
	R 95-440006-198	. STRINGER,RH/STA 174.56 TO 233.50/C/	1	18
-127	96-440000-137	. STRINGER,LH/STA 230.69 TO 257.42/C/	1	1
	58-440000-27	. STRINGER,LH/STA 230.69 TO 257.42/C/	1	3
	96-440000-138	. STRINGER,RH/STA 230.69 TO 257.42/C/	1	1
	58-440000-28	. STRINGER,RH/STA 230.69 TO 257.42/C/	1	3
-128	96-440001-87	. STRINGER,LH/STA 257.606 TO 272/C/	1	4
	96-440001-88	. STRINGER,RH/STA 257.606 TO 272/C/	1	4
-129	45-410176	. ANGLE/FWD OF STA 233.50/.	2	4
	95-430005-5	. STRINGER,LH/STA 174.56 TO 233.36/B/	1	17
-130	95-440006-195	. STRINGER,LH/STA 174.56 TO 233.36/B/	1	18
	95-430005-6	. STRINGER,RH/STA 174.56 TO 233.36/B/	1	17
	95-440006-196	. STRINGER,RH/STA 174.56 TO 233.36/B/	1	18
	95-440000-143	. STRINGER/STA 174.56 TO 247.63/A/.	1	17
-131	95-440000-145	. STRINGER/STA 174.56 TO 247.63/A/.	1	18
	96-440001-67	. DOUBLER/STA 170/.	2	5
-132	96-440001-161	. DOUBLER/STA 170/.	2	6

CODES OF EFFECTIVITY

1	TC-1 THRU TC-1607	2	TC-393 THRU TC-1607
3	TE-1 THRU TE-942 EXCEPT TE-938	4	TC-1 THRU TC-1607 TE-1 THRU TE-942 EXCEPT TE-938
5	TC-1 THRU TC-1402 TE-1 THRU TE-846	6	TC-1403 THRU TC-1607 TE-847 THRU TE-942 EXCEPT TE-938
7	TC-678 THRU TC-1607 TE-1 THRU TE-942 EXCEPT TE-938	8	TC-1 THRU TC-954
9	TC-393 THRU TC-1402 TE-1 THRU TE-846	10	TC-1 THRU TC-1402
11	TC-955 THRU TC-1402	12	TC-1403 THRU TC-1607
13	TC-1 THRU TC-120	14	TC-121 THRU TC-1607 TE-1 THRU TE-942 EXCEPT TE-938
15	TC-1 THRU TC-1537 TE-1 THRU TE-908	16	TC-1538 THRU TC-1607 TE-909 THRU TE-942 EXCEPT TE-938
17	TC-1 THRU TC-125	18	TC-126 THRU TC-1607 TE-1 THRU TE-942 EXCEPT TE-938
19	TC-955 THRU TC-1607	20	TC-678 THRU TC-1607

"END"

53-20-01
FLOORBOARD INSTALLATION

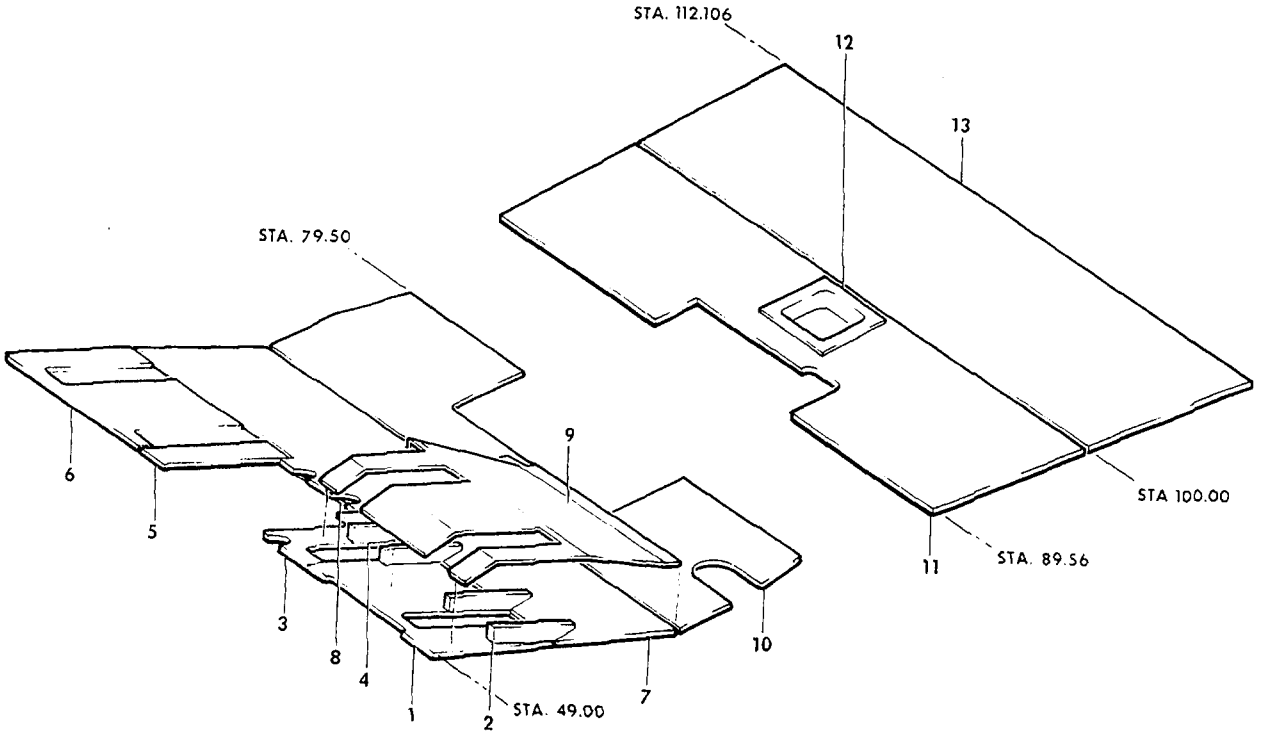

B55 312 14

FIGURE 20-01.FLOORBOARD INSTALLATION
/SHEET 1 OF 2 SHEETS/

SUB-SECT UNIT & ITEM NO.	PART NO.	DESCRIPTION 1 2 3 4 5 6 7	UNITS PER ASSY	USABLE ON CODE
20-01	95-420013-25	FLOORBOARD INSTL,CABIN/STA 49.00 TO 112.106/. .	NP	2
	95-420013-29	FLOORBOARD INSTL,CABIN/STA 49.00 TO 112.106/. .	NP	3
	95-420013-41	FLOORBOARD INSTL,CABIN/STA 49.00 TO 112.106/. .	NP	4
	95-420013-651	. FLOORBOARD ASSY,PILOT/STANDARD/	1	5
	95-420013-650	. FLOORBOARD ASSY,PILOT/OPTIONAL/	1	5
	95-420013-661	. FLOORBOARD ASSY,PILOT/WITH SOUNDPROOFING/ . .	1	4
- 1	95-420013-5	. . FLOORBOARD,PILOT/STA 49.00/	1	1
- 2	95-420013-27	. . BLOCK	3	1
	95-420013-653	. FLOORBOARD ASSY,PILOT/STANDARD/	1	5
	95-420013-652	. FLOORBOARD ASSY,PILOT/OPTIONAL/	1	5
	95-420013-663	. FLOORBOARD ASSY,PILOT/WITH SOUNDPROOFING/ . .	1	4
- 3	95-420013-17	. . FLOORBOARD,PILOT/STA 49.00/	1	1
- 4	95-420013-27	. . BLOCK	1	1
	95-420013-647	. FLOORBOARD ASSY,COPILOT/STANDARD/	1	5
	95-420013-623	. FLOORBOARD ASSY,COPILOT/OPTIONAL/	1	5
	95-420013-662	. FLOORBOARD ASSY,COPILOT/WITH SOUNDPROOFING/ .	1	4
- 5	95-420013-21	. . FLOORBOARD,COPILOT/STA 49.00/	1	1
	A8580-623	. . NUTPLATE.	3	1
	95-420013-642	. FLOORBOARD ASSY,COPILOT/STANDARD/	1	5
	95-420013-634	. FLOORBOARD ASSY,COPILOT/OPTIONAL/	1	5
	95-420013-664	. FLOORBOARD ASSY,COPILOT/WITH SOUNDPROOFING/ .	1	4
- 6	95-420013-1	. . FLOORBOARD,COPILOT/STA 49.00/	1	1
	95-420013-643	. FLOORBOARD ASSY,CABIN/STANDARD/	1	5
	95-420013-635	. FLOORBOARD ASSY,CABIN/OPTIONAL/	1	5
	95-420013-669	. FLOORBOARD ASSY,CABIN/WITH SOUNDPROOFING/ . .	1	4
- 7	95-420013-43	. . FLOORBOARD,CABIN/STA 68.00/	1	1
- 8	35-415380-16	. . PLATE	1	1
	A6194-621	. . NUTPLATE.	4	1
	96-420010-1	. PAN,PILOT FLOORBOARD.	1	5
- 9	96-420010-5	. PAN,PILOT FLOORBOARD.	1	4
	95-420013-644	. FLOORBOARD ASSY,CABIN/STANDARD/	1	5
	95-420013-619	. FLOORBOARD ASSY,CABIN/OPTIONAL/	1	5
	95-420013-666	. FLOORBOARD ASSY,CABIN/WITH SOUNDPROOFING/ . .	1	4
- 10	95-420013-13	. . FLOORBOARD,CABIN/STA 68.00 TO 79.00/. . .	1	1
	A8580-623	. . NUTPLATE.	3	1
	NAS395-6-3	. . NUTPLATE.	4	1
	35-534305-624	. FLOORBOARD ASSY,CABIN/STANDARD/	1	5
	35-534305-625	. FLOORBOARD ASSY,CABIN/OPTIONAL/	1	5
	35-415417-675	. FLOORBOARD ASSY,CABIN/WITH SOUNDPROOFING/ . .	1	4
	35-415380-10	. . FLOORBOARD,CABIN/STA 89.00 TO 100.00/ . . .	1	5
- 11	35-415417-77	. . FLOORBOARD,CABIN/STA 89.00 TO 100.00/ . . .	1	4
	A8580-623	. . NUTPLATE.	7	1
- 12	35-415380-22	. PAN	1	1
	35-534304-650	. FLOORBOARD ASSY,CABIN/STANDARD/	1	5
	35-534304-638	. FLOORBOARD ASSY,CABIN/OPTIONAL/	1	5
	35-534304-652	. FLOORBOARD ASSY,CABIN/WITH SOUNDPROOFING/ . .	1	4
- 13	35-534304-12	. . FLOORBOARD,CABIN/STA 100.00 TO 112.00/. . .	1	1
	SS58303	. . NUT	1	1
	R MS24621-19	. SCREW,FLOORBOARD ATTACH/SUPERSEDES. NAS384-6-12P/	AR	1

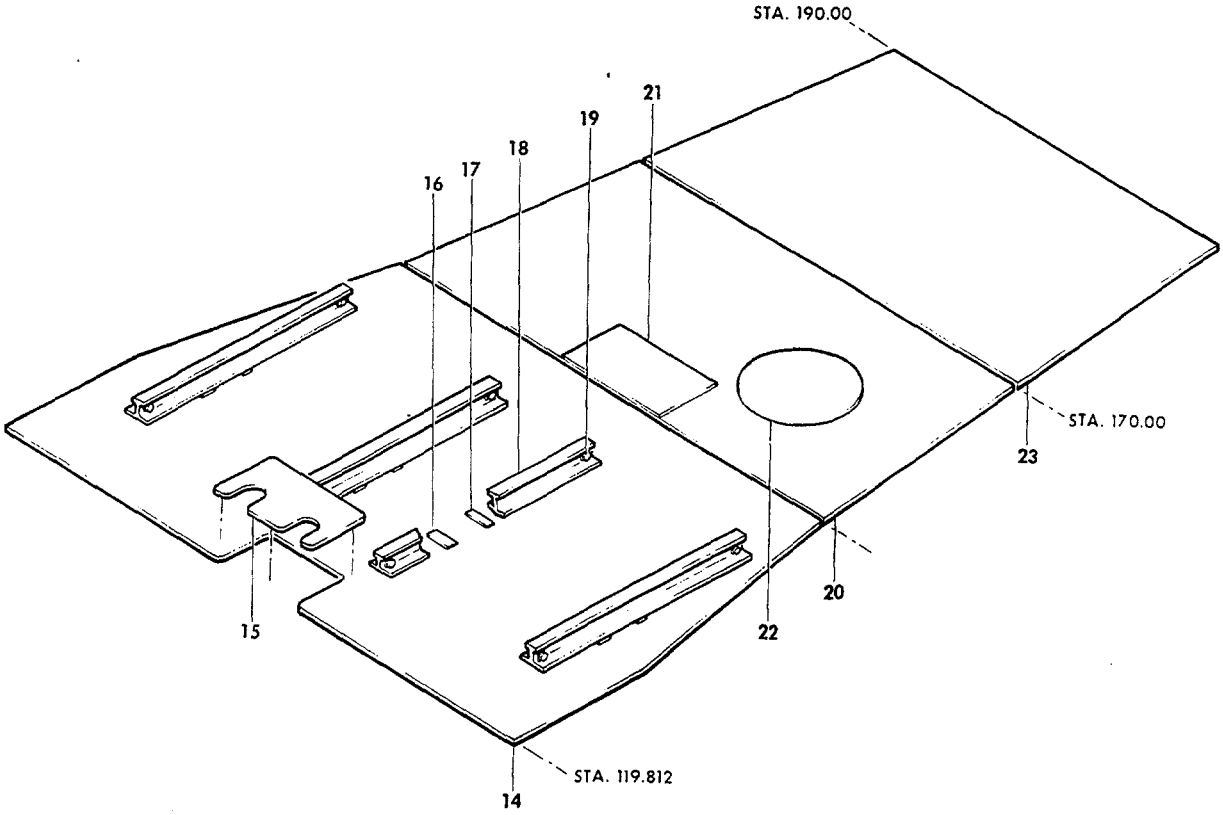

BSS-312-15

FIGURE 20-01.FLOORBOARD INSTALLATION
/SHEET 2 OF 2 SHEETS/

SUB-SECT UNIT & ITEM NO.	PART NO.	DESCRIPTION 1 2 3 4 5 6 7	UNITS PER ASSY	USABLE ON CODE
20-01	96-420125	FLOORBOARD INSTL,AFT CABIN.	NP	1
- 14	58-420044-3	. FLOORBOARD,AFT CABIN/STA 119.00 TO 151.00/. .	1	1
		/ATTACHING PARTS/		
	AN530-8R8	. SCREW	27	
	MS27039-1-8	. SCREW	10	
	SL213-3-1	. NUT,CLIP.	10	
		——*——		
- 15	36-400011-107	. DOOR,ACCESS	1	1
		/ATTACHING PARTS/		
	AN530-6R6	. SCREW	6	
	NAS395-6-1	. NUT	6	
		——*——		
- 16	95-420015-149	. SHIM,SEAT TRACK	4	1
- 17	95-420015-147	. SHIM,SEAT TRACK	4	1
- 18	002-430021-39	. SEAT TRACK,3RD & 4TH.	4	1
		/ATTACHING PARTS/		
	MS27039-1-10	. SCREW	32	
	SL213-3-1	. NUT	32	
	MS27039-1-10	. SCREW	40	
		——*——		
- 19	002-430013-31	. STOP.	8	7
		/ATTACHING PARTS/		
	MS27039-1-20	. SCREW	4	
	MS21042L3	. NUT	4	
	NAS517-3-4	. SCREW	8	
		——*——		
	58-440026-1	FLOORBOARD,INSTL,AFT CABIN.	NP	1
- 20	58-440026-3	. FLOORBOARD,AFT CABIN/STA 151.00 TO 170.00/. .	1	1
		/ATTACHING PARTS/		
	AN530-8R8	. SCREW	55	
		——*——		
- 21	R 95-440006-33	. DOOR,ACCESS	1	1
		/ATTACHING PARTS/		
	AN530-6R6	. SCREW	6	
	A9030-6Z1	. NUTPLATE.	6	
		——*——		
- 22	95-440006-249	. DOOR,ACCESS	1	1
		/ATTACHING PARTS/		
	AN530-6R6	. SCREW	4	
	A9030-6Z1	. NUTPLATE.	4	
		——*——		
- 23	96-440001-19	FLOORBOARD,AFT BAGGAGE/STA 170.00 TO 190.00/. .	1	6
		/LESS STROBE LIGHT/		
	58-360025-601	FLOORBOARD,AFT BAGGAGE/STA 170.00 TO 190.00/. .	1	6
		/WITH STROBE LIGHT/		
		/ATTACHING PARTS/		
	NAS387-8-14P	SCREW	14	
	SL201-5AA11	NUT,CLIP.	14	
		——*——		

CODES OF EFFECTIVITY

1	TC-1 THRU TC-1607	2	TC-1 THRU TC-190
3	TC-191 THRU TC-1344 TE-1 THRU TE-799	4	TC-1345 THRU TC-1607 TE-800 THRU TE-942 EXCEPT TE-938
5	TC-1 THRU TC-1344 TE-1 THRU TE-799	6	TC-678 THRU TC-1607 TE-1 THRU TE-942 EXCEPT TE-938
7	TC-1475 THRU TC-1480 TC-1490 THRU TC-1607 TE-884 THRU TE-942 EXCEPT TE-938		

53-25-01
PEDESTAL STRUCTURE

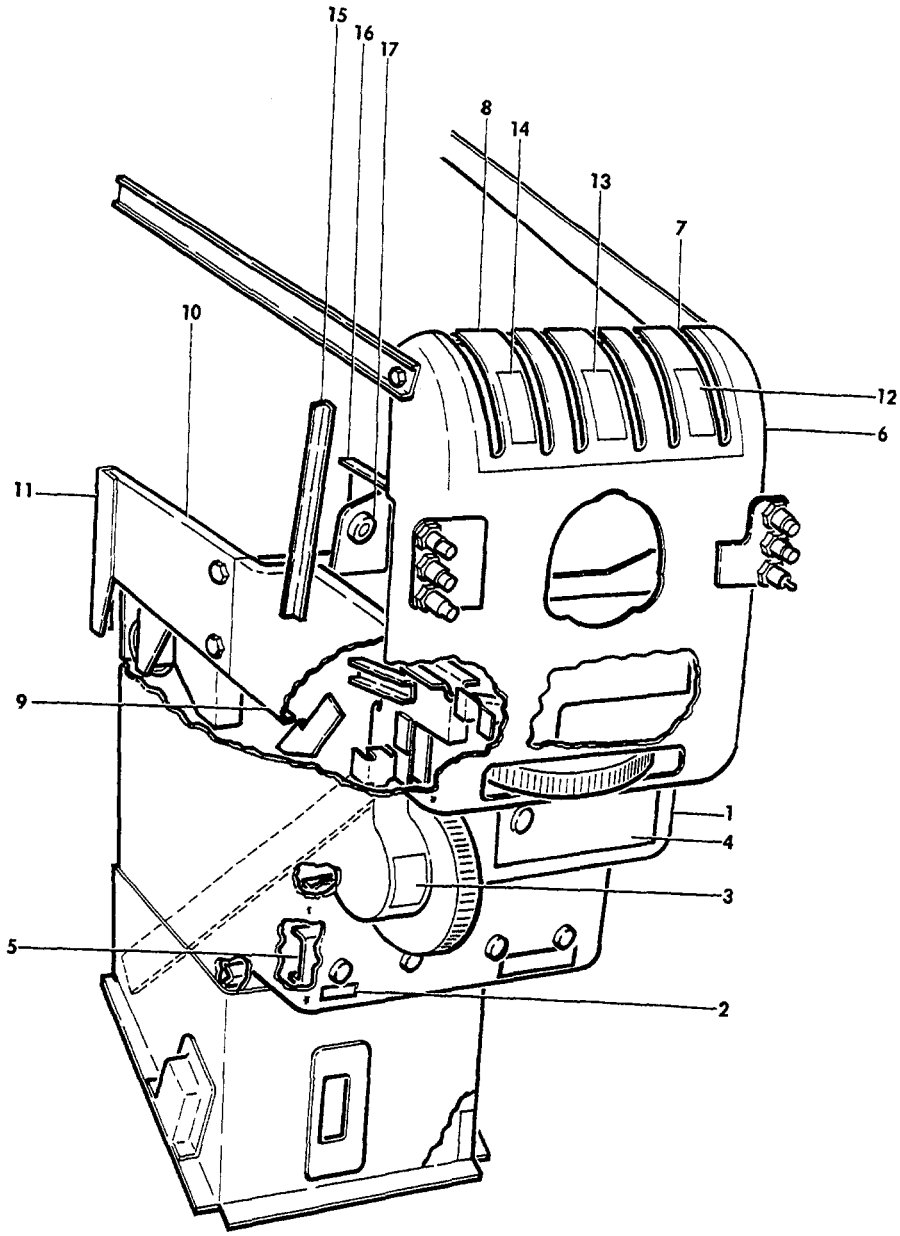

55-157-10

FIGURE 25-01.PEDESTAL STRUCTURE
/SHEET 1 OF 5 SHEETS/

SUB-SECT UNIT & ITEM NO.	PART NO.	DESCRIPTION 1 2 3 4 5 6 7	UNITS PER ASSY	USABLE ON CODE
25-01	95-324006-650	STRUCTURE ASSY,CONSOLE.	1	1
	96-324035-601	STRUCTURE ASSY,CONSOLE.	1	2
	96-324055	STRUCTURE ASSY,CONSOLE.	1	3
	58-324025-605	STRUCTURE ASSY,CONSOLE.	1	4
		NOTE THIS IS NOT A COMPLETE CONSOLE ASSY. THIS FIGURE LISTS ONLY THOSE PARTS APPLICABLE TO THE STRUCTURE OF THE CONSOLE. THE REMAINING PARTS ARE LISTED IN CHAPTERS 27 AND 76.		
- 1	95-324006-649	. COVER ASSY,CONSOLE.	1	1
	96-324035-606	. COVER ASSY,CONSOLE.	1	5
	58-324025-17	. COVER ASSY,CONSOLE.	1	4
- 2	95-324019	. . PLACARD,VACUUM CHECK GAGE	1	1
- 3	50-524223-3	. . PLACARD,ELEVATOR TAB WHEEL.	1	
- 4	95-324020	. . PLACARD,LIGHT RHEOSTATS	1	1
	96-324047	. . PLACARD,LIGHT RHEOSTATS	1	6
	96-324137	. . PLACARD,LIGHT RHEOSTATS	1	7
- 5	96-324035-9	. . CHANNEL	1	11
	R 0320-351	. RHEOSTAT,INDICATOR LIGHTS	1	1
	R 0317-351	. RHEOSTAT,INSTRUMENT LIGHTS.	1	1
	R 0153-351	. RHEOSTAT,INSTRUMENT LIGHTS.	1	
	R 0111-351	. RHEOSTAT,OVERHEAD INSTRUMENT LIGHTS	1	18
	R 6591	. RHEOSTAT,OVERHEAD INSTRUMENT LIGHTS	1	19
	R KR6903	. RHEOSTAT,OVERHEAD INSTRUMENT LIGHTS	1	20
	R 6591	. RHEOSTAT,RADIO INDICATOR COMPASS.	1	22
	R 0122-351	. RHEOSTAT,RADIO INDICATOR COMPASS.	1	21
- 6	95-324006-101	. SHELL ASSY,CENTER PANEL	1	1
	96-324035-603	. SHELL ASSY,CONSOLE.	1	8
	96-324035-33	. SHELL ASSY,CONSOLE.	1	9
	96-324055-21	. SHELL ASSY,CONSOLE.	1	10
	96-324055-107	. SHELL ASSY,CONSOLE.	1	12
	58-324025-25	. SHELL ASSY,CONSOLE.	1	4
	95-324006-103	. . SHELL	1	1
	96-324035-5	. . SHELL	1	8
	96-324055-109	. . SHELL	1	9
	96-324055-23	. . SHELL	1	10
	96-324055-109	. . SHELL	1	12
	58-324025-27	. . SHELL	1	4
	50-320137	. . BEARING	1	
- 7	95-324006-163	. . ANGLE	1	
- 8	96-324037-1	. PLATE,ENGINE CONTROL IDENTIFICATION	1	11
- 9	50-320038	. CHANNEL,SUPPORT LH.	1	
	95-324006-273	. CHANNEL,SUPPORT RH.	1	1
	95-324006-96	. CHANNEL,SUPPORT RH.	1	12
- 10	95-324006-7	. CHANNEL,SUPPORT LH.	1	
	95-324006-8	. CHANNEL,SUPPORT RH.	1	
	R AN3-4A	. BOLT.	2	
	R AN960-10	. WASHER.	2	
	R MS20365-1032	. NUT/SUPERSEDES AN365-1032/.	2	
- 11	95-324006-61	. ANGLE,LH.	1	
	95-324006-62	. ANGLE,RH.	1	
- 12	95-324006-161	. PLACARD,MIXTURE LEVEL	1	1
- 13	95-324006-159	. PLACARD,THROTTLE INDICATOR.	1	1
- 14	95-324006-169	. PLACARD,PROPELLER PITCH	1	1
	R 96-324037-1	. PLATE,ENGINE CONTROL IDENTIFICATION	1	5
- 15	95-324006-127	. ANGLE,LH.	1	
	95-324006-128	. ANGLE,RH.	1	
- 16	95-324006-604	. BRACKET ASSY,AILERON TAB DRUM	1	
	95-324006-65	. . BRACKET	1	
- 17	50-320032	. . BEARING	1	

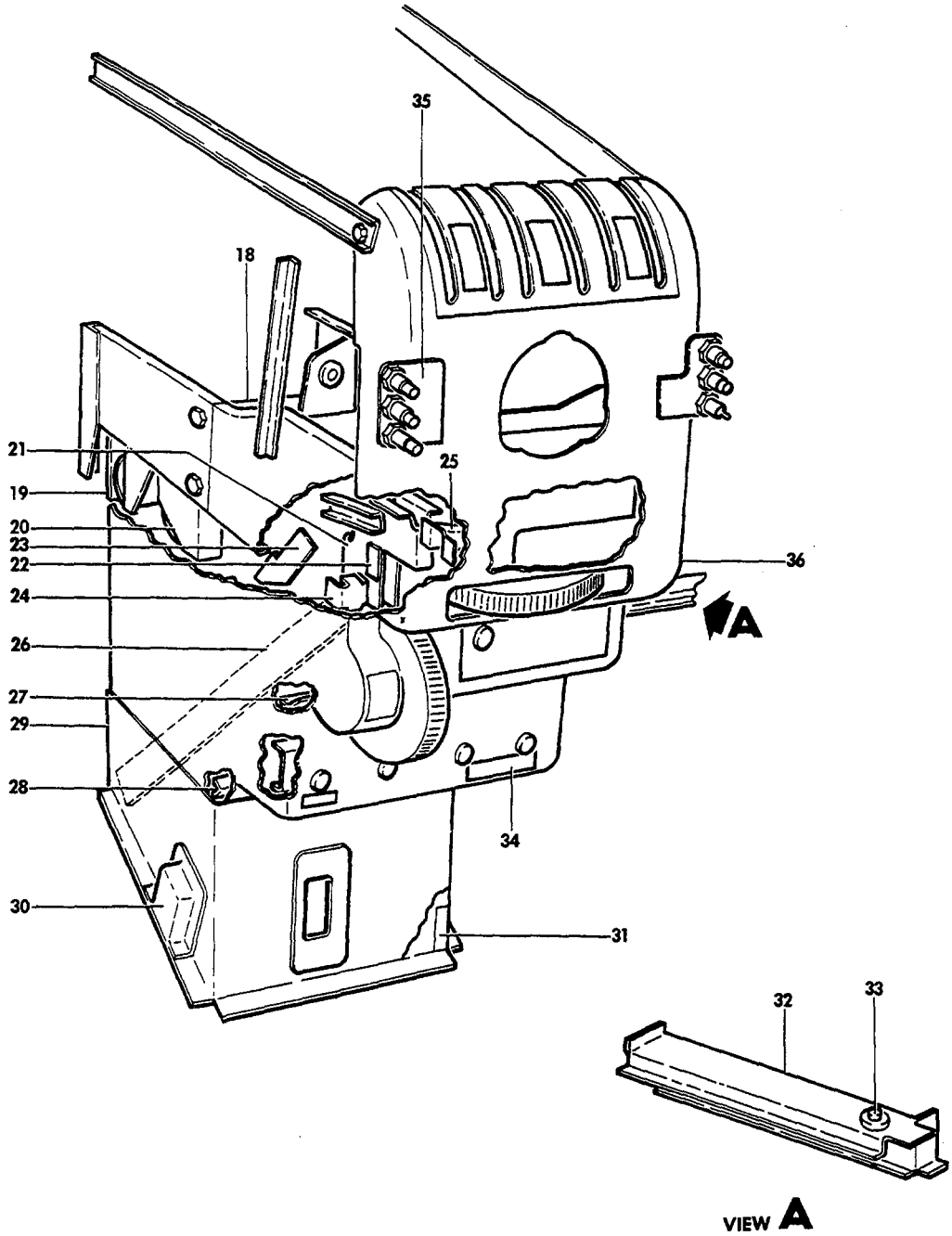

55-157-11

FIGURE 25-01.PEDESTAL STRUCTURE
/SHEET 2 OF 5 SHEETS/

ATA CODE & INDEX NO.	PART NO.	DESCRIPTION 1 2 3 4 5 6 7	UNITS PER ASSY	USABLE ON CODE
25-01 - 18	95-324006-81	. SHELF	1	
- 19	95-324006-39	. BRACKET,PULLEY.	1	15
	96-324035-29	. BRACKET,PULLEY.	1	16
- 20	95-324006-37	. BRACKET,PULLEY.	1	
- 21	95-324006-179	. BRACKET ASSY,PULLEY	1	
	50-320037-2	. . BRACKET,PULLEY.	1	
- 22	95-324006-181	. . FAIRLEAD.	1	
- 23	95-324006-83	. BRACKET,LH.	1	
	95-324006-84	. BRACKET,RH.	1	
- 24	50-524198	. SUPPORT,PULLEY BRACKET.	1	
	35-524554	. BRACKET,PULLEY.	1	
		/ATTACHING PARTS/		
	AN515-632R6	. SCREW	2	
	AN960-6	. WASHER.	2	
	AN365-632	. NUT	2	
		——*——		
- 25	50-320033	. BRACKET	1	
- 26	95-324006-15	. CHANNEL,CONTROL CONSOLE LH.	1	
	95-324006-16	. CHANNEL,CONTROL ASSY RH	1	
- 27	95-324006-27	. ANGLE ASSY.	1	
	95-324006-29	. . ANGLE	1	
	AN366-1032	. . NUTPLATE.	2	
- 28	95-324006-31	. ANGLE ASSY.	1	
	95-324006-33	. . ANGLE	1	
- 29	95-324006-606	. BOX ASSY,CONTROL CONSOLE.	1	
		/ATTACHING PARTS/		
	AN515-8	. SCREW	10	
		——*——		
	95-324006-13	. . BOX	1	
- 30	95-324006-153	. . COVER	1	
- 31	95-324006-171	. . ANGLE	1	
		/ATTACHING PARTS/		
	AN520-10R	. . SCREW	3	
	AN366F1032	. . NUTPLATE.	3	
		——*——		
- 32	95-324006-1	. CHANNEL,LH.	1	1
	95-324006-2	. CHANNEL,RH.	1	1
- 33	150PL12	. MOUNT,SHOCK	4	1
		/ATTACHING PARTS/		
	AN520-832	. SCREW	4	
	AN365-832	. NUT	4	
	AN4A	. BOLT.	1	
	AN801302	. WASHER.	1	
	AN365-428	. NUT	1	
		——*——		
- 34	3D1313	. PLACARD,DEICER.	1	14
- 35	96-324035-7	. BRACKET,LH.	1	8
	96-324035-31	. BRACKET,LH.	1	9
	96-324055-25	. BRACKET,LH.	1	10
	96-324055-111	. BRACKET,LH.	1	12
	58-324031-7	. PLATE ASSY,DETENT LH.	1	4
	96-324035-8	. BRACKET,RH.	1	8
	96-324055-113	. BRACKET,RH.	1	13
- 36	96-324035-17	BAR,LH TIE.	1	11
	96-324035-18	BAR,RH TIE.	1	11
		/ATTACHING PARTS/		
	AN3-5A/M/	BOLT.	1	
	AN960-10	WASHER.	2	
	AN365-1032	NUT	1	
		——*——		

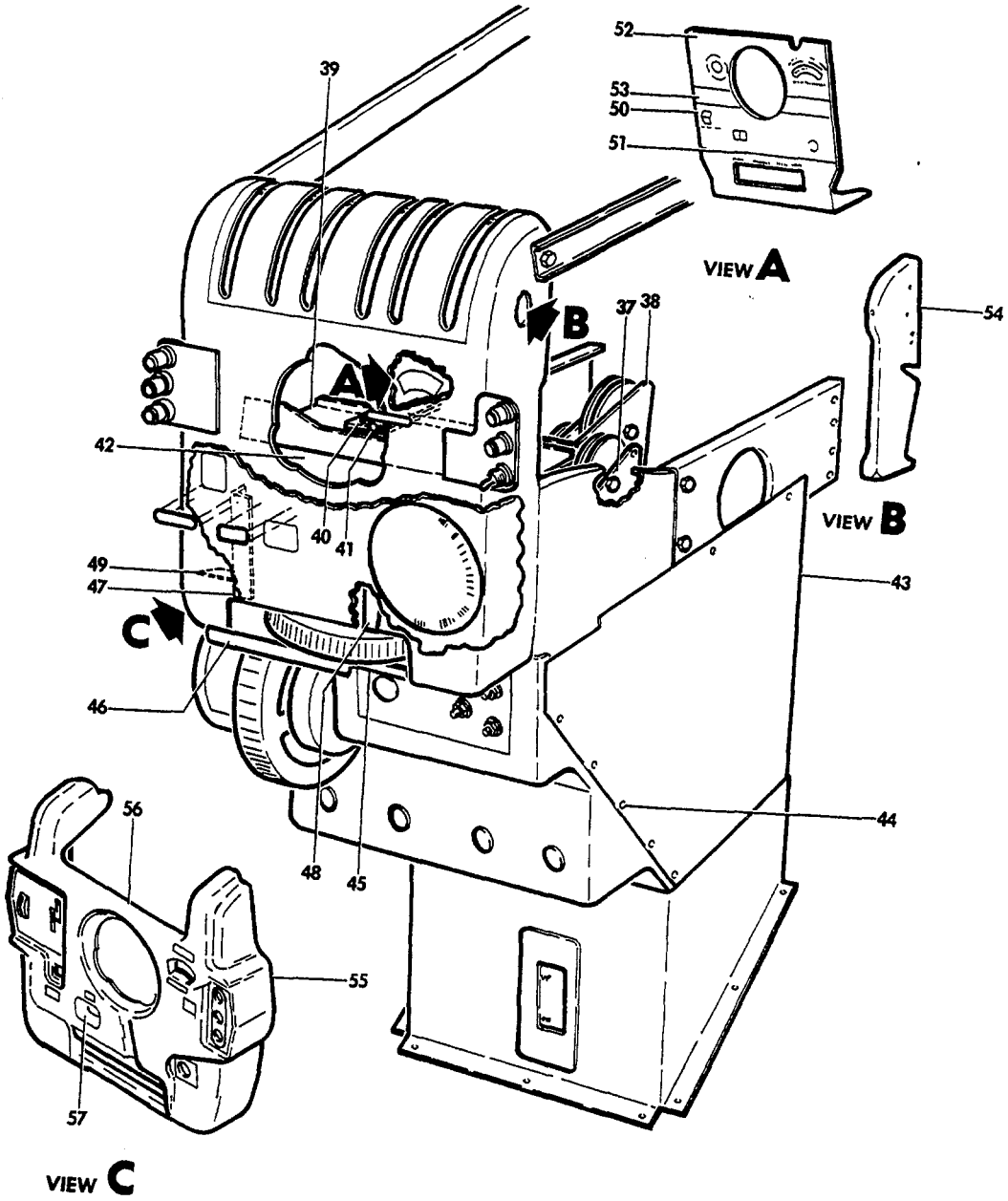

55-157-12

FIGURE 25-01.PEDESTAL STRUCTURE
/SHEET 3 OF 5 SHEETS/

SUB-SECT UNIT & ITEM NO.	PART NO.	DESCRIPTION 1 2 3 4 5 6 7	UNITS PER ASSY	USABLE ON CODE
25-01 - 37	95-324006-67	. BRACKET,ELEVATOR PULLEY	1	
- 38	95-324006-69	. BRACKET,RUDDER TAB PULLEY	1	
- 39	95-324006-3	. STIFFENER,PANEL	1	
- 40	95-324006-59	. WELD ASSY,ENGINE CONTROL STOP	1	
		/ATTACHING PARTS/		
	AN515-832	. SCREW	2	
	AN960-8	. WASHER.	2	
	22NA17A82	. NUTPLATE.	1	
		——*——		
- 41	95-324006-155	. BOLT.	1	
	AN345-10	. NUT,LOCKING	2	
- 42	50-320034	. SUPPORT ASSY,RUDDER TAB MECHANISM	1	
	50-320034-2	. . SUPPORT	1	
	50-320046	. . BEARING	1	
	295925-56	. . SPACER ASSY	1	
- 43	95-324006-9	. COVER,CONSOLE/LH/	1	
	95-324006-10	. COVER,CONSOLE/RH/	1	
		/ATTACHING PARTS/		
- 44	AN525-1032	. SCREW	12	
	AN366-1032	. NUTPLATE.	12	
		——*——		
- 45	50-320242	. CHANNEL ASSY,SUPPORT.	1	
	50-320242-1	. . CHANNEL	1	
	50-320032	. . BEARING	1	
- 46	96-324036-7	. PLATE	1	11
		/ATTACHING PARTS/		
	AN530-4	. SCREW	2	
		——*——		
- 47	50-320031-2	. SUPPORT,CONSOLE/LH/	1	
- 48	50-320030-2	. SUPPORT,CONSOLE/RH/	1	
- 49	95-324006-5	. STIFFENER,CONSOLE	1	
- 50	95-324006-99	. COVER ASSY,CONSOLE UPPER.	1	1
	95-324006-605	. . COVER ASSY.	1	1
- 51	95-324031	. . . PLACARD	1	1
- 52	50-320243-13	. . PANEL	1	1
- 53	50-320243-15	. . PANEL,LH.	1	1
	50-320243-16	. . PANEL,RH.	1	1
	95-324046	. . PLACARD,FLAP POSITION INDICATOR	1	1
- 54	95-324006-57	. ESCUTCHEON,CENTER PANEL SHELL/LH.	1	1
	95-324006-58	. ESCUTCHEON,CENTER PANEL SHELL/RH.	1	
		/ATTACHING PARTS/		
	NAS388-8-7P	. SCREW/LH/	2	
	NAS388-8-10P	. SCREW/RH/	2	
	100696X08-06-008	. SPACER,LH	1	
	AN525-10R	. SCREW	3	
	AN3-5	. BOLT/LH FWD SIDE/	1	
	AN507-1032R	. SCREW	1	
	AN960D10L	. WASHER.	1	
	22A5-02	. NUT/SUPERSEDES 22NA5-02 NUT/.	2	
	22NA17A02	. NUT	2	
	AN364-1032R	. NUT	1	
		——*——		
- 55	R 96-324036-13	. COVER ASSY,CONSOLE/UPPER/	1	8
	96-324102-601	. COVER ASSY,CONSOLE/UPPER/	1	9
	96-324102-1	. COVER ASSY,CONSOLE/UPPER/	1	3
	96-324174-601	. COVER ASSY,CONSOLE/UPPER/	1	4
- 56	96-324036-1	. . COVER	1	8
	96-324102-7	. . COVER	1	17
	96-324174-5	. . COVER	1	4
- 57	96-324036-5	. . GLASS	3	11

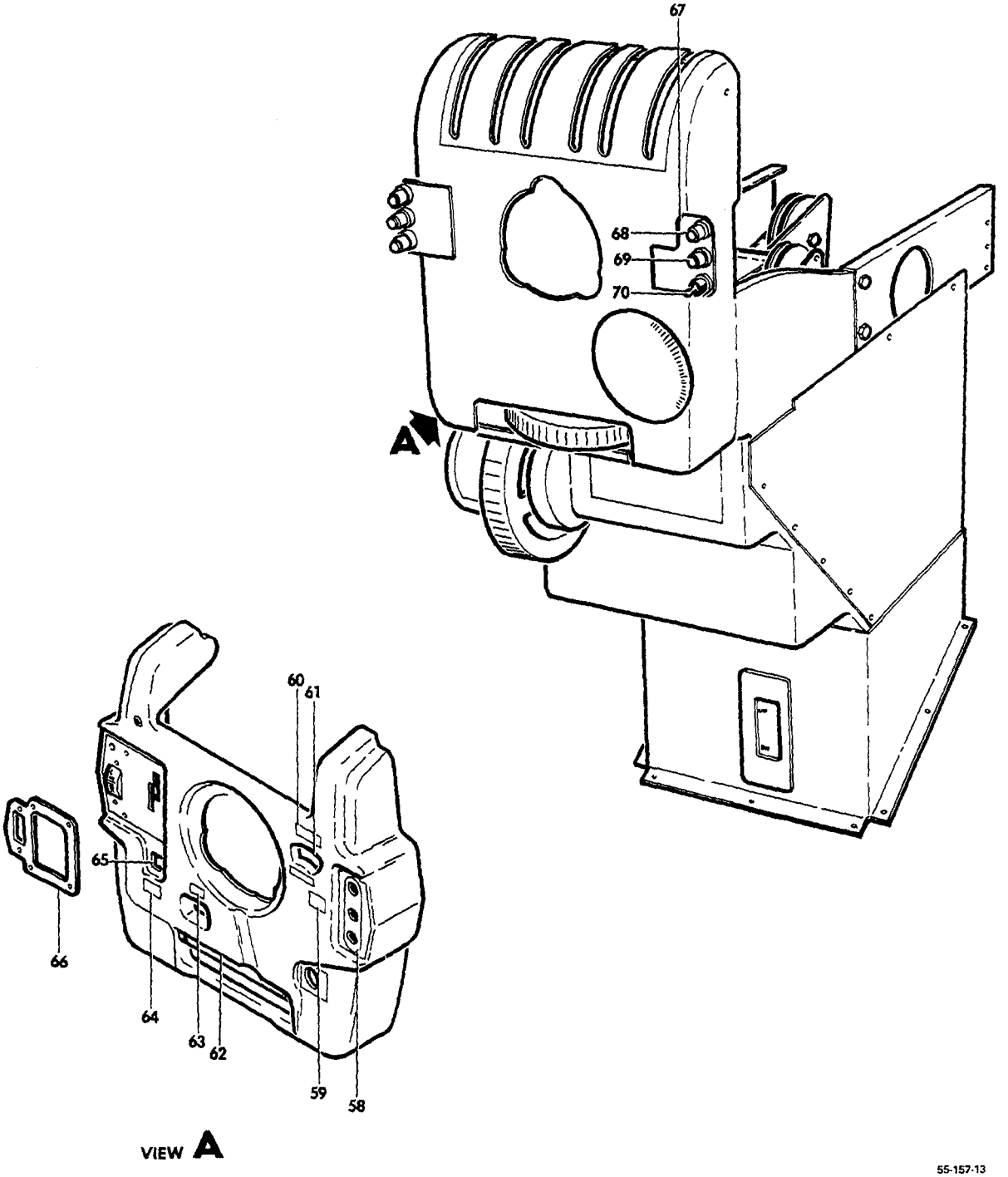

FIGURE 25-01.PEDESTAL STRUCTURE
/SHEET 4 OF 5 SHEETS/

ATA CODE & INDEX NO.	PART NO.	DESCRIPTION 1 2 3 4 5 6 7	UNITS PER ASSY	USABLE ON CODE
25-01 - 58	96-324048	. . PLACARD,LANDING GEAR POSITION INDICATOR . .	1	8
	96-324103	. . PLATE,LANDING GEAR POSITION INDICATOR . . .	1	13
- 59	96-324050	. . PLACARD,LANDING GEAR.	1	11
- 60	96-324042	. . PLACARD,AILERON TAB	1	11
- 61	96-324040	. . PLACARD,AILERON TAB INDICATOR	1	11
- 62	96-324036-7	. . PLATE,RUDDER TAB CONTROL.	1	11
		/ATTACHING PARTS/		
	AN530-4	. . SCREW	2	
		----*----		
	96-324045	. . PLACARD,RUDDER TAB CONTROL.	1	11
- 63	96-324044	. . PLACARD,RUDDER TAB INDICATOR.	1	11
- 64	96-324043	. . PLACARD,ELEVATOR TAB INDICATOR.	1	11
- 65	96-324041	. . PLACARD,ELEVATOR TAB INDICATOR.	1	11
- 66	96-324049	. . PLACARD,FLAPS	1	8
	96-324052	. . PLATE,FLAP POSITION INDICATOR	1	8
	96-324104-1	. . PLATE,FLAP POSITION INDICATOR	1	17
	96-324168-7	. . COVER,FLAP CONTROL.	1	4
- 67	96-324035-8	. BRACKET,RH.	1	8
	96-324055-113	. BRACKET,RH.	1	13
- 68	VM911M2	LIGHT,LANDING GEAR INDICATOR/UP POSITION/ . . .	1	11
- 69	VM911M3	LIGHT,LANDING GEAR INDICATOR/DOWN POSITION/ . .	1	14
	VM911M7	LIGHT,LANDING GEAR INDICATOR/DOWN POSITION/ . .	1	4
- 70	8857K44	SWITCH ASSY,LANDING GEAR/STANDARD/.	1	11
	60-364011	SWITCH ASSY,LANDING GEAR/MAGIC HAND/.	1	

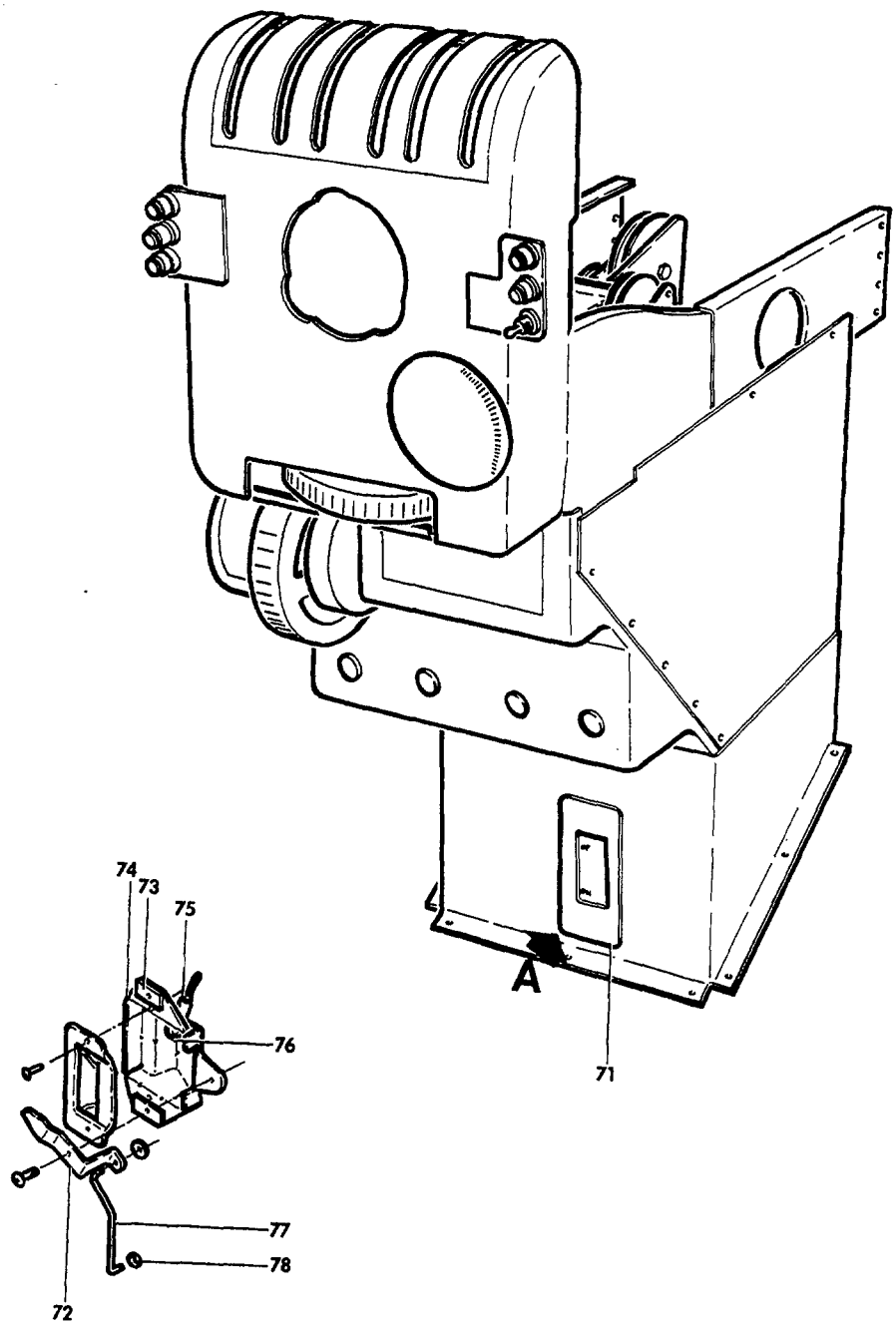

FIGURE 25-01.PEDESTAL STRUCTURE
/SHEET 5 OF 5 SHEETS/

SUB-SECT UNIT & ITEM NO.	PART NO.	DESCRIPTION 1 2 3 4 5 6 7	UNITS PER ASSY	USABLE ON CODE
25-01	95-324006-601	INDICATOR ASSY,LANDING GEAR POSITION.	1	
- 71	35-815147	. FACE.	1	
		/ATTACHING PARTS/		
	PK65A4-6	. SCREW	2	
		----*----		
- 72	95-324006-119	. INDICATOR,LANDING GEAR POSITION	1	
		/ATTACHING PARTS/		
	AN515-8-6	. SCREW	1	
	AN960-8	. WASHER.	2	
	MS20365-832	. NUT/SUPERSEDES AN365-832/	1	
		----*----		
- 73	50-55+100	. SPACER.	2	
	A6195-8Z3	. NUT	2	
- 74	95-324006-165	. BOX,INDICATOR	1	
		/ATTACHING PARTS/		
	PK76XZ8-12	. SCREW	2	
		----*----		
- 75	2505	. SOCKET,INDICATOR.	1	
- 76	95-324006-75	. BULB.	1	
	32445	. CONNECTOR	1	
- 77	95-324006-35	LINK,LANDING GEAR INDICATOR	1	
		/ATTACHING PARTS/		
- 78	A872-012	NUT	2	
		----*----		
	35-815148-9	PLACARD,LANDING GEAR INDICATOR.	1	

CODES OF EFFECTIVITY

1	TC-1 THRU TC-190	2	TC-191 THRU TC-1607 EXCEPT TC-350
3	TE-1 THRU TE-767 AND TC-350	4	TE-768 THRU TE-942 EXCEPT TE-938
5	TC-1 THRU TC-1607 TE-1 THRU TE-767	6	TC-191 THRU TC-1042 TE-1 THRU TE-451
7	TC-1043 THRU TC-1607 TE-452 THRU TE-942 EXCEPT TE-938	8	TC-191 THRU TC-1010 EXCEPT TC-350
9	TC-1011 THRU TC-1607	10	TE-1 THRU TE-197
11	TC-191 THRU TC-1607 TE-1 THRU TE-942 EXCEPT TE-938	12	TE-198 THRU TE-767
13	TC-1011 THRU TC-1607 TE-1 THRU TE-942 EXCEPT TE-938	14	TC-191 THRU TC-1607 TE-1 THRU TE-767
15	TC-1 THRU TC-1607	16	TE-1 THRU TE-942 EXCEPT TE-938
17	TC-1011 THRU TC-1607 TE-1 THRU TE-767	18	TC-191 THRU TC-1042 TE-1 THRU TE-937 TE-939 THRU TE-942
19	TC-1043 THRU TC-1402	20	TC-1403 THRU TC-1607
21	TC-1114 THRU TC-1607 TE-1 THRU TE-937 TE-939 THRU TE-942	22	TC-191 THRU TC-1113

53-30-01
FUSELAGE SKINS
TC-1 THRU TC-1607 EXCEPT TC-350

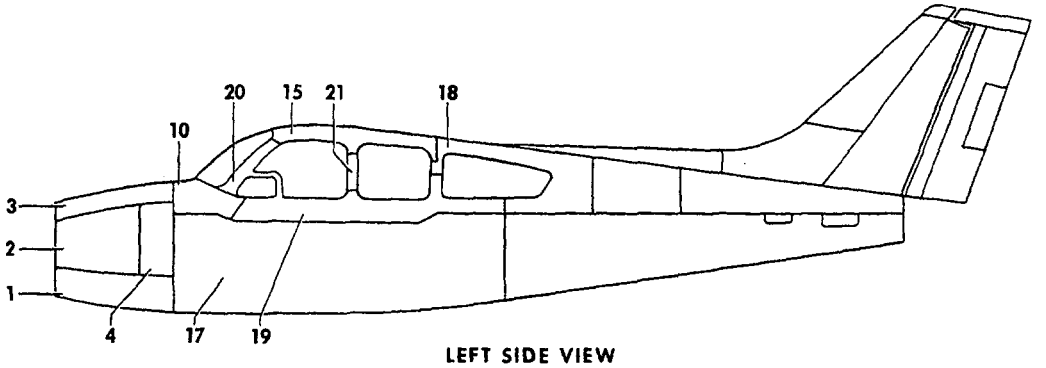

LEFT SIDE VIEW

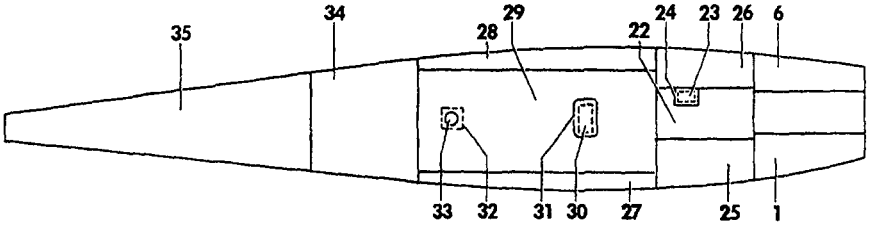

BOTTOM VIEW

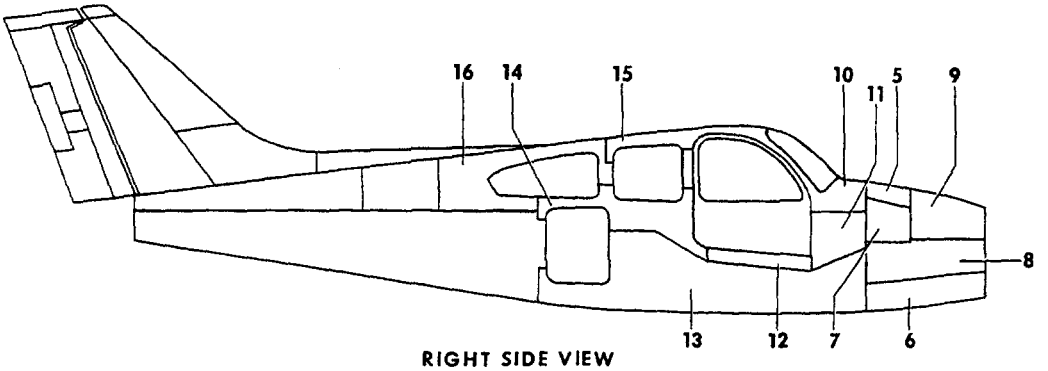

RIGHT SIDE VIEW

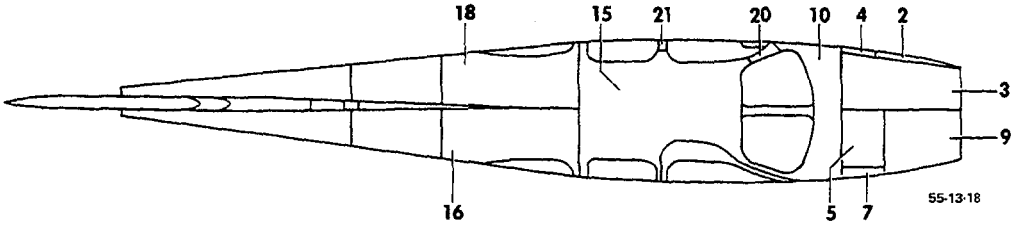

TOP VIEW

FIGURE 30-01.FUSELAGE SKINS
/SHEET 1 OF 2 SHEETS/

ATA CODE & INDEX NO.	PART NO.	DESCRIPTION 1 2 3 4 5 6 7	UNITS PER ASSY	USABLE ON CODE
30-01 - 1	95-410006-45	SKIN,NOSE/LOWER FWD LH/	1	1
- 2	95-410005-53	SKIN,NOSE/FWD LH/	1	1
- 3	95-410005-55	SKIN,NOSE/UPPER LH/	1	1
- 4	95-410005-187	SKIN,NOSE/AFT LH/	1	1
- 5	95-410005-57	SKIN,NOSE/UPPER AFT/	1	1
- 6	95-410006-47	SKIN,NOSE/LOWER RH/	1	1
- 7	95-410005-59	SKIN,NOSE/UPPER AFT RH/	1	1
- 8	95-410006-49	SKIN,NOSE/LOWER RH/	1	1
	95-410029-19	SKIN,NOSE BAGGAGE DOOR.	1	2
- 9	95-410029-47	SKIN,NOSE BAGGAGE DOOR.	1	3
	95-420015-159	SKIN,LOWER WINDSHIELD	1	4
- 10	95-420015-179	SKIN,LOWER WINDSHIELD	1	5
- 11	95-420011-45	SKIN,CABIN.	1	1
- 12	35-410452-3	SKIN,CABIN/RH/.	1	1
	95-420011-79	SKIN,CABIN/LOWER/	1	6
	96-420000-25	SKIN,CABIN/LOWER/	1	7
- 13	96-420000-27	SKIN,CABIN/LOWER/	1	8
	35-410452-9	SKIN,CABIN/RH/.	1	9
- 14	95-420015	SKIN,CABIN/RH/.	1	10
	35-410452-105	SKIN,CABIN TOP.	1	11
- 15	96-420001-87	SKIN,CABIN TOP.	1	12
	95-420015-116	SKIN,CABIN TOP/AFT/	1	9
	95-420015-174	SKIN,CABIN TOP/AFT/	1	13
- 16	96-420001-90	SKIN,CABIN TOP/AFT/	1	12
	95-420011-65	SKIN,CABIN/LOWER LH/.	1	6
- 17	96-420000-23	SKIN,CABIN/LOWER LH/.	1	14
	95-420015-115	SKIN,CABIN/UPPER LH/.	1	9
	95-420015-173	SKIN,CABIN/UPPER LH/.	1	13
- 18	96-420001-89	SKIN,CABIN/UPPER LH/.	1	12
- 19	95-420015-101	SKIN,CABIN/LH/.	1	1
	35-410452-165	SKIN,WINDSHIELD/LH/	1	15
- 20	58-420039	SKIN,WINDSHIELD/LH/	1	16
- 21	35-410452-75	SKIN,WINDOW/LH/	1	1
- 22	95-420011-113	SKIN,CABIN BOTTOM	1	1
- 23	95-420011-107	DOOR,ACCESS	1	1
- 24	95-420011-109	DOUBLER,ACCESS DOOR	1	1
- 25	95-420011-57	SKIN,CABIN BOTTOM	1	1
- 26	95-420011-55	SKIN,CABIN BOTTOM	1	1
- 27	95-420015-53	SKIN,CABIN BOTTOM/LH/	1	1
- 28	95-420015-41	SKIN,CABIN BOTTOM/RH/	1	1
- 29	95-420015-55	SKIN,CABIN BOTTOM/CENTER/	1	1
- 30	35-410259-16	DOOR,ACCESS	1	1
- 31	35-410259-18	DOUBLER,ACCESS DOOR	1	1
	81A16758	PLUG,BOTTOM	1	1
- 32	95-420015-57	DOUBLER,VENT SCREEN	1	1
- 33	50-554106	SCREEN,VENT	1	1
- 34	95-440006-215	SKIN,AFT FUSELAGE/BOTTOM/	1	1
- 35	96-440000-53	SKIN,AFT FUSELAGE/BOTTOM/	1	1

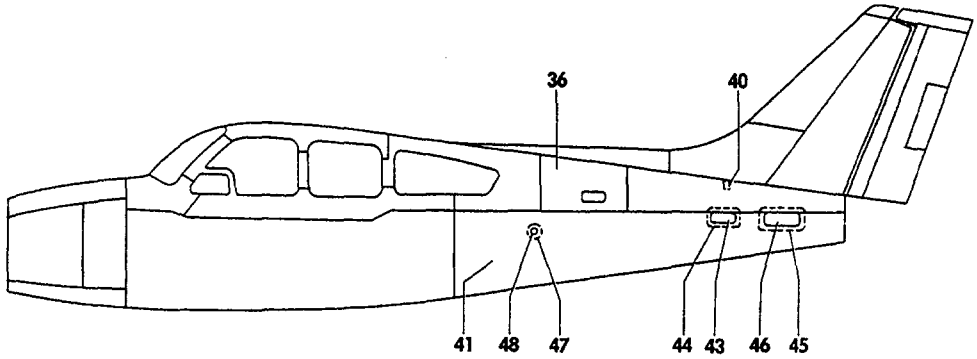

LEFT SIDE VIEW

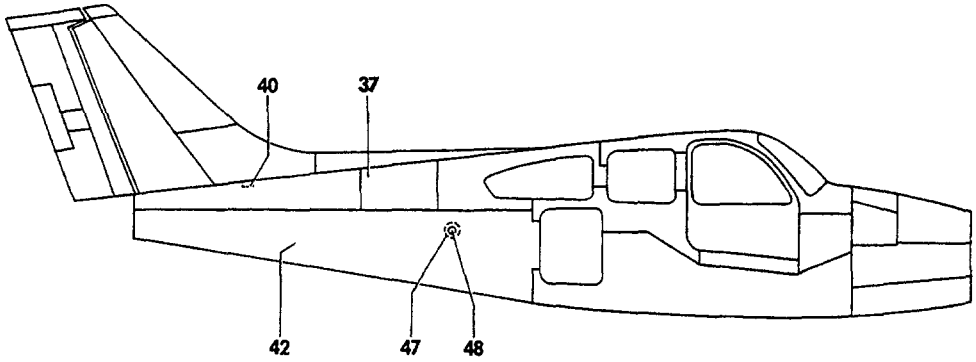

RIGHT SIDE VIEW

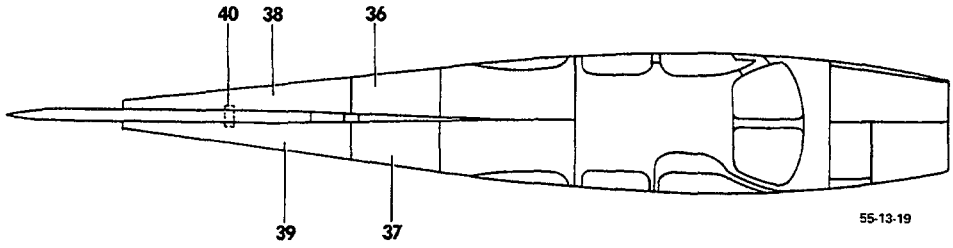

TOP VIEW

FIGURE 30-01.FUSELAGE SKINS
/SHEET 2 OF 2 SHEETS/

ATA CODE & INDEX NO.	PART NO.	DESCRIPTION 1 2 3 4 5 6 7	UNITS PER ASSY	USABLE ON CODE
30-01	95-440006-159	SKIN,AFT FUSELAGE/LH UPPER/WITHOUT BAG.COMPT/ .	1	17
	95-440006-201	SKIN,AFT FUSELAGE/LH UPPER/WITHOUT BAG.COMPT/ .	1	18
	96-440001-57	SKIN,AFT FUSELAGE/LH UPPER/WITH BAG. COMPT/ . .	1	19
	96-440000-153	SKIN,AFT FUSELAGE/LH UPPER/WITHOUT BAG.COMPT/ .	1	20
- 36	96-440001-163	SKIN,AFT FUSELAGE/LH UPPER/WITHOUT BAG.COMPT/ .	1	20
	95-440006-160	SKIN,AFT FUSELAGE/RH UPPER/WITHOUT BAG.COMPT/ .	1	17
	95-440006-202	SKIN,AFT FUSELAGE/RH UPPER/WITHOUT BAG.COMPT/ .	1	21
- 37	96-440001-59	SKIN,AFT FUSELAGE/RH UPPER/WITH BAG.COMPT/. . .	1	22
- 38	96-440000-23	SKIN,AFT FUSELAGE/LH UPPER AFT/	1	1
- 39	96-440000-24	SKIN,AFT FUSELAGE/RH UPPER AFT/	1	1
- 40	96-440000-1	DOUBLER	1	1
	96-440000-51	SKIN,AFT FUSELAGE/LH LOWER SIDE/W/O BAG.COMPT/.	1	1
- 41	96-440001-61	SKIN,AFT FUSELAGE/LH LOWER SIDE/. . . . . /WITH BAGGAGE COMPARTMENT/	1	1
	96-440000-52	SKIN,AFT FUSELAGE/RH LOWER SIDE/W/O BAG.COMPT/.	1	1
- 42	96-440001-62	SKIN,AFT FUSELAGE/RH LOWER SIDE/. . . . . /WITH BAGGAGE COMPARTMENT/	1	1
- 43	95-440005-7	DOUBLER	1	1
- 44	95-440005-9	DOOR,ACCESS	1	1
- 45	95-440006-131	DOUBLER	1	1
- 46	95-440006-129	DOOR,ACCESS	1	1
- 47	95-440006-243	DOUBLER,STATIC BUTTON	2	1
	35-410365	DOUBLER,STATIC BUTTON/THIS DOUBLER USED IN. . . PLACE OF 95-440006-243 ON SHIPS WITH OPTIONAL BAGGAGE COMPARTMENT/	2	23
- 48	96-440012-1	BUTTON,STATIC AIR	2	1
	96-440014	BUTTON,STATIC AIR/THIS BUTTON USED IN PLACE OF. 96-440012-1 ON SHIPS OPTIONAL BAG.COMPT/	2	23
	35-410286	PLACARD,STATIC AIR BUTTON	2	1

CODES OF EFFECTIVITY

1	TC-1 THRU TC-1607 EXCEPT TC-350	2	TC-1 THRU TC-537 EXCEPT TC-350 AND TC-408
3	TC-408,TC-538 THRU TC-1607	4	TC-1 THRU TC-1042 EXCEPT TC-350
5	TC-1043 THRU TC-1607	6	TC-1 THRU TC-1260 EXCEPT TC-350
7	TC-1261 THRU TC-1492	8	TC-1493 THRU TC-1607
9	TC-1 THRU TC-811 EXCEPT TC-350	10	TC-812 THRU TC-1607
11	TC-1 THRU TC-954 EXCEPT TC-350	12	TC-955 THRU TC-1607
13	TC-812 THRU TC-954	14	TC-1261 THRU TC-1607
15	TC-1 THRU TC-1298 EXCEPT TC-350	16	TC-1299 THRU TC-1607
17	TC-1 THRU TC-125	18	TC-126 THRU TC-1480 EXCEPT TC-350
19	TC-678 THRU TC-1480	20	TC-1481 THRU TC-1607
21	TC-126 THRU TC-1607 EXCEPT TC-350	22	TC-678 THRU TC-1607
23	TC-678 THRU TC-934		

"END"

53-32-01
FUSELAGE SKINS
TC-350,TE-1 THRU TE-942 EXCEPT TE-938

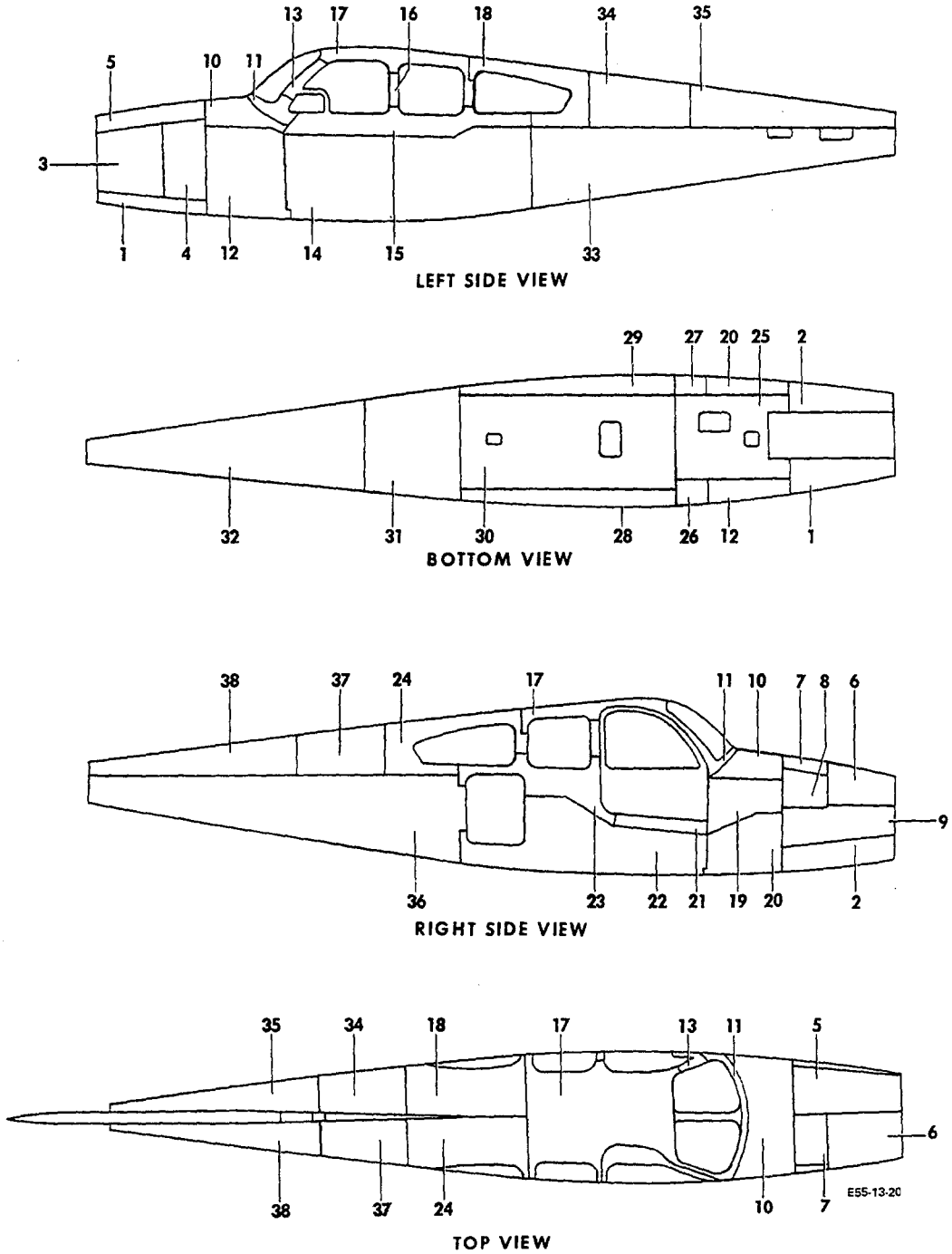

FIGURE 32-01.FUSELAGE SKINS
/SHEET 1 OF 2 SHEETS/

ATA CODE & INDEX NO.	PART NO.	DESCRIPTION 1 2 3 4 5 6 7	UNITS PER ASSY	USABLE ON CODE
32-01	95-410006-45	SKIN,NOSE/LOWER FWD LH/	1	1
- 1	96-410031-37	SKIN,NOSE/LOWER FWD LH/	1	2
	95-410006-47	SKIN,NOSE/LOWER FWD RH/	1	1
- 2	96-410031-39	SKIN,NOSE/LOWER FWD RH/	1	2
- 3	95-410005-53	SKIN,NOSE/FWD LH/	1	3
- 4	95-410005-187	SKIN,NOSE/AFT LH/	1	3
- 5	95-410005-55	SKIN,NOSE	1	3
	95-410029-47	SKIN,NOSE BAGGAGE DOOR.	1	4
- 6	95-410029-63	SKIN,NOSE BAGGAGE DOOR.	1	5
- 7	95-410005-57	SKIN,NOSE/UPPER AFT RH/	1	3
- 8	95-410005-59	SKIN,NOSE/UPPER AFT RH/	1	3
	95-410006-49	SKIN,NOSE/FWD RH/	1	4
- 9	95-410006-109	SKIN,NOSE/FWD RH/	1	5
	96-420001-59	SKIN,NOSE/UPPER/.	1	4
- 10	96-420001-195	SKIN,NOSE/UPPER/.	1	5
- 11	96-420001-111	SKIN,WINDSHIELD/LOWER/.	1	4
- 12	96-420001-65	SKIN,CABIN/LH/.	1	3
	35-410452-165	SKIN,WINDSHIELD POST/LH/.	1	6
- 13	58-420039	SKIN,WINDSHIELD POST/LH/.	1	7
	96-420001-61	SKIN,CABIN/LOWER LH SIDE/	1	8
- 14	96-420001-207	SKIN,CABIN/LOWER LH SIDE/	1	9
- 15	95-420015-101	SKIN,CABIN/UPPER LH SIDE/	1	3
- 16	35-410452-75	SKIN,CANOPY/LH/	1	3
- 17	96-420001-87	SKIN,CANOPY/TOP,FWD/.	1	3
- 18	96-420001-89	SKIN,CANOPY/TOP LH/	1	3
- 19	96-420001-75	SKIN,CABIN/FWD RH/.	1	3
- 20	96-420001-79	SKIN,CABIN/LOWER FWD RH/.	1	3
- 21	35-410452-3	SKIN,CABIN/RH/.	1	3
	96-420001-77	SKIN,CABIN/RH/.	1	8
	96-420001-209	SKIN,CABIN/RH/.	1	10
- 22	96-420001-233	SKIN,CABIN/RH/.	1	11
- 23	95-420015-178	SKIN,CABIN/RH/.	1	3
- 24	96-420001-90	SKIN,CANOPY/TOP RH/	1	3
	96-420001-73	SKIN,CABIN/BOTTOM FWD/.	1	1
- 25	96-420001-121	SKIN,CABIN/BOTTOM FWD/.	1	2
- 26	96-420001-69	SKIN,CABIN/LOWER LH/.	1	3
- 27	96-420001-70	SKIN,CABIN/LOWER RH/.	1	3
- 28	96-420001-67	SKIN,CABIN/LOWER LH/.	1	3
- 29	96-420001-68	SKIN,CABIN/LOWER RH/.	1	3
- 30	95-420015-55	SKIN,CABIN/BOTTOM/.	1	3
- 31	95-440006-215	SKIN,AFT FUSELAGE/BOTTOM/	1	3
- 32	96-440000-53	SKIN,AFT FUSELAGE/BOTTOM/	1	3
- 33	96-440001-61	SKIN,AFT FUSELAGE/LH SIDE LOWER/.	1	3
	96-440001-57	SKIN,AFT FUSELAGE/LH UPPER/	1	12
- 34	96-440001-163	SKIN,AFT FUSELAGE/LH UPPER/	1	13
- 35	96-440001-85	SKIN,AFT FUSELAGE/LH UPPER/	1	3
- 36	96-440001-62	SKIN,AFT FUSELAGE/RH SIDE LOWER/.	1	3
- 37	96-440001-59	SKIN,AFT FUSELAGE/RH UPPER/	1	3
- 38	96-440001-86	SKIN,AFT FUSELAGE/RH UPPER/	1	3

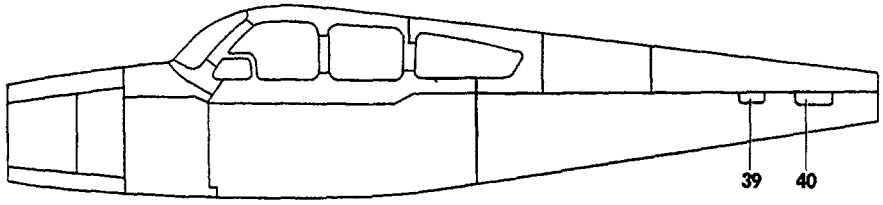

LEFT SIDE VIEW

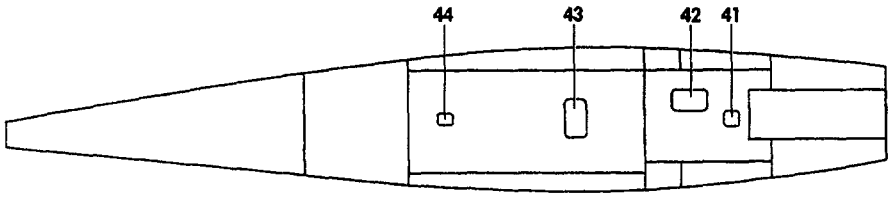

BOTTOM VIEW

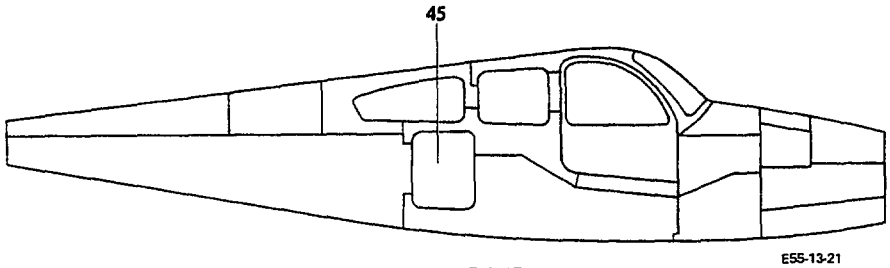

RIGHT SIDE VIEW

FIGURE 32-01.FUSELAGE SKINS
/SHEET 2 OF 2 SHEETS/

ATA CODE & INDEX NO.	PART NO.	DESCRIPTION 1 2 3 4 5 6 7	UNITS PER ASSY	USABLE ON CODE
32-01 - 39	95-440005-9	DOOR,AFT INSPECTION	1	3
	95-440005-7	DOUBLER,AFT INSPECTION DOOR	1	3
- 40	95-440006-129	DOOR,AFT INSPECTION	1	3
	95-440006-131	DOUBLER,AFT INSPECTION DOOR	1	3
	96-440012-1	BUTTON,STATIC AIR	2	3
	95-440006-243	DOUBLER,STATIC AIR BUTTON	2	3
- 41	95-110014-253	DOOR,FWD ACCESS	1	3
	95-110014-381	DOUBLER,FWD ACCESS DOOR	1	3
- 42	95-420011-107	DOOR,FWD INSPECTION	1	3
	95-420011-109	DOUBLER,FWD INSPECTION DOOR	1	3
- 43	35-410259-16	DOOR,LANDING GEAR ACCESS.	1	3
	35-410259-18	DOUBLER ASSY,LANDING GEAR ACCESS DOOR	1	3
- 44	95-440006-33	DOOR,AFT INSPECTION	1	3
- 45	35-410070-89	SKIN,AFT BAGGAGE DOOR	1	3
	96-420016-53	SKIN,UTILITY BAGGAGE DOOR/OPT/.	1	14
	96-420016-173	SKIN,UTILITY BAGGAGE DOOR/OPT/.	1	15

CODES OF EFFECTIVITY

1 TC-350,TE-1 THRU TE-300
2 TE-301 THRU TE-942 EXCEPT TE-938
3 TC-350,TE-1 THRU TE-942 EXCEPT TE-938
4 TC-350,TE-1 THRU TE-451
5 TE-452 THRU TE-942 EXCEPT TE-938
6 TC-350,TE-1 THRU TE-767 EXCEPT TE-733
7 TE-733,TE-768 THRU TE-942 EXCEPT TE-938
8 TC-350 TE-1 THRU TE-730
9 TE-731 THRU TE-942 EXCEPT TE-938
10 TE-731 THRU TE-885
11 TE-886 THRU TE-942 EXCEPT TE-938
12 TC-350,TE-1 THRU TE-879
13 TE-880 THRU TE-942 EXCEPT TE-938
14 TC-350,TE-1 THRU TE-555
15 TE-556 THRU TE-942 EXCEPT TE-938

"END"

53-50-01
NOSE CONE
TC-1 THRU TC-501

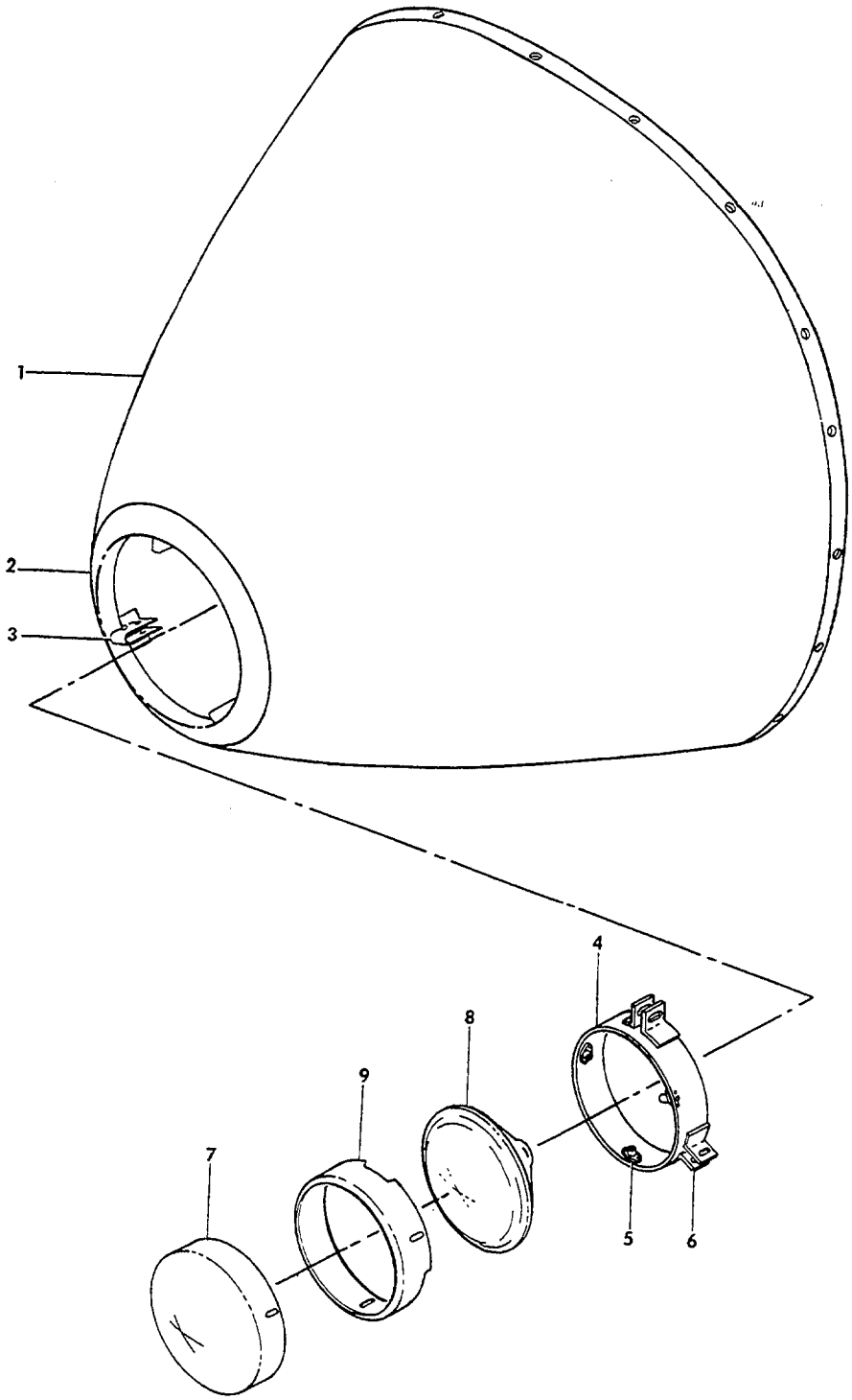

FIGURE 50-01.NOSE CONE

ATA CODE & INDEX NO.	PART NO.	DESCRIPTION 1 2 3 4 5 6 7	UNITS PER ASSY	USABLE ON CODE
50-01	95-410011-1	CONE ASSY,NOSE.	1	1
		/ATTACHING PARTS/		
	22NA21-82	NUTPLATE.	17	
	AN525-8R	SCREW	17	
		——*——		
- 1	95-410011-3	. CONE,NOSE	1	1
- 2	95-410011-5	. LIP	1	1
- 3	50-400205-1	. SUPPORT,RING/SUPERSEDES 50-400205/.	3	1
	50-400166-6	. RING ASSY	1	1
- 4	50-400166-2	. . RING.	1	1
- 5	50-400166-4	. . NUTPLATE.	3	1
- 6	50-400415	. . CLIP.	6	1
- 7	50-400165	. CAP/USED IN PLACE OF TAXI LIGHT/.	1	1
		/ATTACHING PARTS/		
	AN526-832R9	. SCREW	3	
	AN960D8	. WASHER.	3	
		——*——		
- 8	4570	LAMP,TAXI LIGHT	1	1
	7270-6-5	BREAKER,CIRCUIT/SUPERSEDES D7270-6-5/	1	2
	113-103-101	BREAKER,CIRCUIT/SUPERSEDES CB3110C/	1	3
- 9	50-364212	RETAINER,LAMP	1	1
	50-364172-5	CLIP/RETAINER TO RING/.	2	1
	50-364172-9	CLIP/RETAINER TO RING/.	1	1
		/ATTACHING PARTS/		
	AN515-8R5	SCREW	4	
	AN960-8L	WASHER.	7	
	AN365-832	NUT	5	
	AN515-8R9	SCREW	3	
		——*——		
	AN931-4-7	GROMMET	1	1
	49158	CLIP,ELECTRICAL LEAD SUPPORT.	2	1

CODES OF EFFECTIVITY

1 TC-1 THRU TC-501 2 TC-1 THRU TC-190
3 TC-191 THRU TC-501

"END"

53-50-10
NOSE CONE
TC-502 THRU TC-1607
TE-1 THRU TE-942 EXCEPT TE-938

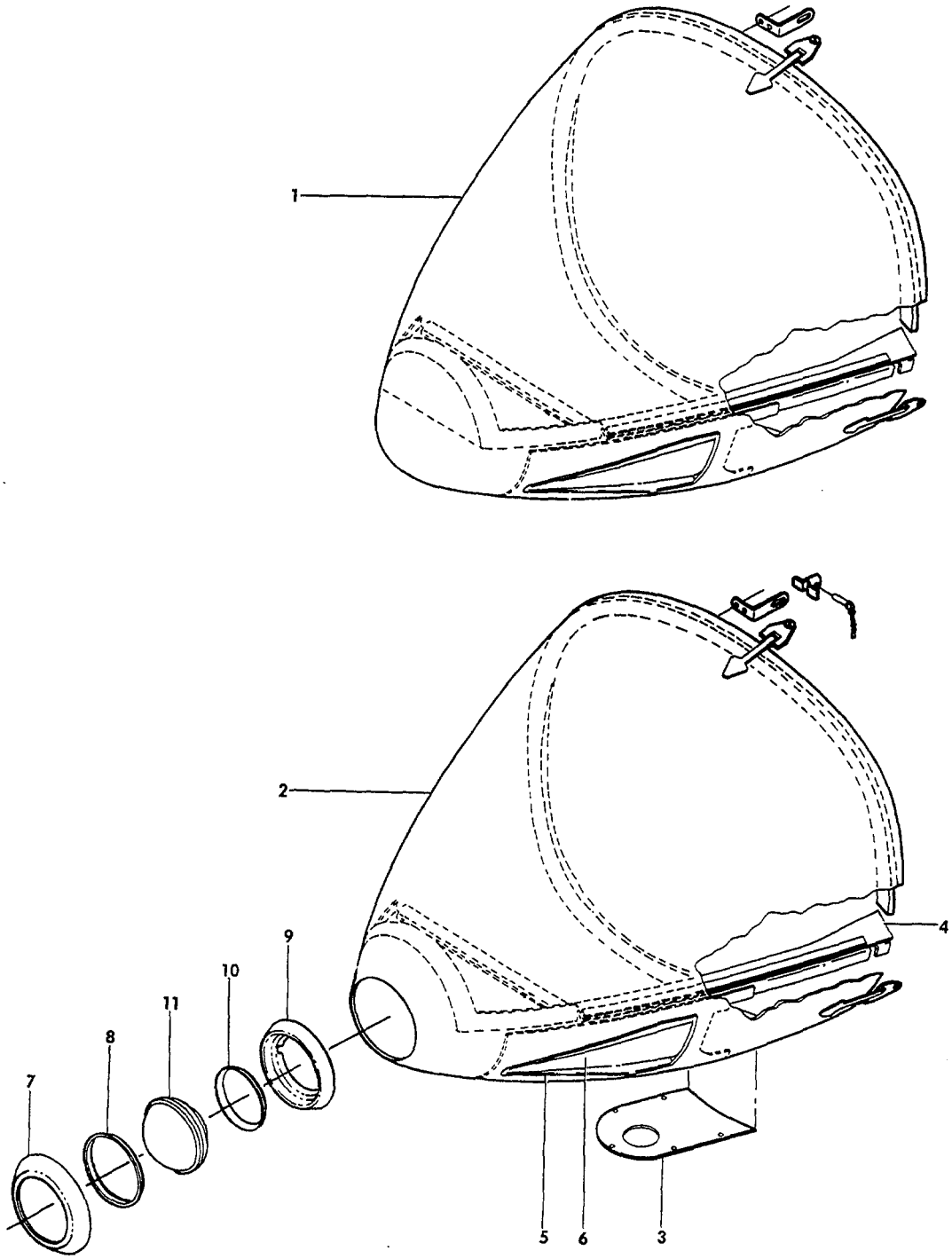

FIGURE 50-10.NOSE CONE
/SHEET 1 OF 2 SHEETS/

ATA CODE & INDEX NO.	PART NO.	DESCRIPTION 1 2 3 4 5 6 7	UNITS PER ASSY	USABLE ON CODE
50-10	96-410021-603	CONE ASSY,NOSE.	1	1
	96-410021-605	CONE ASSY,NOSE/WITH TAXI LIGHT/	1	2
	96-410021-613	CONE ASSY,NOSE.	1	3
- 1	96-410021-609	. CONE,NOSE/SUPERSEDES 95-410040-609/	1	1
- 2	96-410021-607	. CONE,NOSE/WITH TAXI LIGHT/. . . . . /SUPERSEDES 95-410040-607/	1	2
	96-410021-615	. CONE,NOSE	1	3
- 3	95-410040-30	. SHIELD,HEATER EXHAUST . . . . . /ATTACHING PARTS/	1	4
	99833P098	. AIRLOCK	5	4
	98265-1-120	. STUD.	5	4
	99836	. PIN,STUD.	1	4
		----*----		
- 4	95-410040-33	. SEAL ASSY,RADIO SHELF LH.	1	4
	95-410040-36	. . ANGLE	1	4
	95-410040-38	. . ANGLE	1	4
	95-410040-39	. . SEAL.	1	4
	95-410040-41	. . STRIP	1	4
	95-410040-34	. SEAL ASSY,RADIO SHELF RH.	1	4
	95-410040-35	. . ANGLE	1	4
	95-410040-37	. . ANGLE	1	4
	95-410040-39	. . SEAL.	1	4
	95-410040-41	. . STRIP	1	4
- 5	96-410021-15	. PAN,LH DUCT	1	1
	96-410021-16	. PAN,RH DUCT	1	1
	50-554242-3	. DUCT.	2	1
- 6	58-550018-9	. SCOOP ASSY,LH	1	3
	58-550018-11	. SCOOP ASSY,RH	1	3
- 7	95-410040-21	. RETAINER,TAXI LIGHT . . . . . /ATTACHING PARTS/	1	3
	AN507-832R8	. SCREW	5	
	AN366F832	. NUTPLATE.	5	
		----*----		
- 8	50-364253-9	. GASKET.	1	2
- 9	95-410040-19	. RING.	1	2
- 10	50-364253-7	. GASKET.	1	2
- 11	4626	. BULB,TAXI LIGHT	1	2

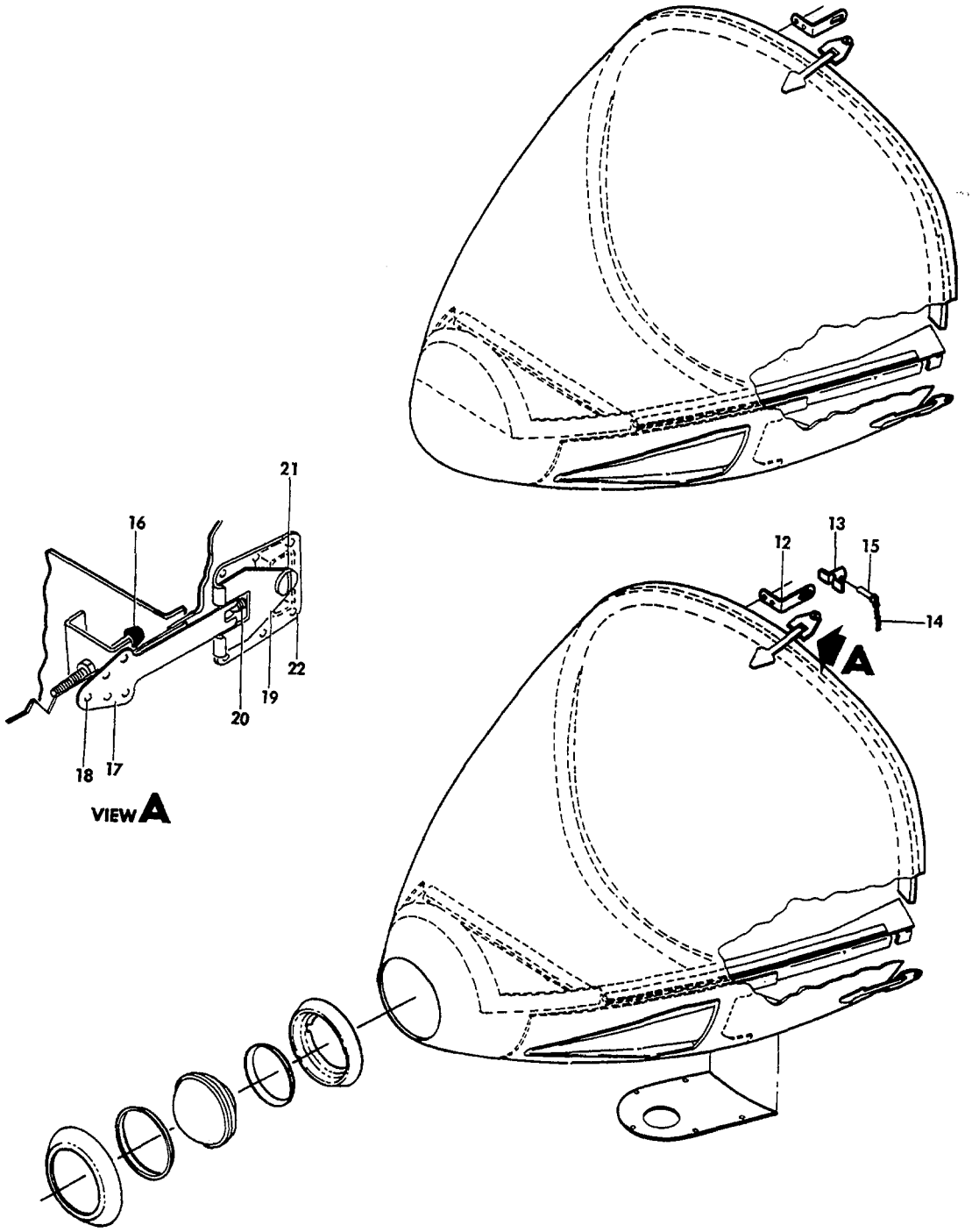

FIGURE 50-10.NOSE CONE
/SHEET 2 OF 2 SHEETS/

ATA CODE & INDEX NO.	PART NO.	DESCRIPTION 1 2 3 4 5 6 7	UNITS PER ASSY	USABLE ON CODE
50-10 - 12	95-410040-27	. ANGLE	1	4
- 13	95-410040-29	. BRACKET	1	4
		/ATTACHING PARTS/		
	AN515-8R	. SCREW	2	
	AN960-8	. WASHER.	2	
		——*——		
- 14	109615-4-081	. CHAIN	1	4
		/ATTACHING PARTS/		
	AN515-6R	. SCREW	1	
	AN960-6	. WASHER.	1	
	AN366-632	. NUTPLATE.	1	
		——*——		
- 15	NAS1334S6S10D	. PIN	1	4
- 16	507208	. STOP/FLAT NOSE/	1	4
	AN935-516	. WASHER,LOCK	2	4
- 17	414-184040-7	. STRAP	1	4
- 18	AN960-4	. WASHER.	3	4
- 19	414-184040-1	. LEVER ASSY.	1	4
- 20	115111-1	. BOLT,T.	1	4
- 21	98292-2-170	. STUD.	1	4
	99836	. PIN	1	4
	99947P130	. RECEPTACLE,STUD	1	4
- 22	414-184040-9	. PLATE	1	4
	414-184040-11	. COVER	1	4
	113-210-102	. CIRCUIT BREAKER/TAXI LIGHT/	1	2

CODES OF EFFECTIVITY

1	TC-502 THRU TC-1560 TE-1 THRU TE-918	2	TC-502 THRU TC-1298 TE-1 THRU TE-767
3	TC-1561 THRU TC-1607 TE-919 THRU TE-942 EXCEPT TE-938	4	TC-502 THRU TC-1607 TE-1 THRU TE-942 EXCEPT TE-938

"END"

53-50-20
NOSE CONE
USED ONLY ON RADAR EQUIPPED AIRCRAFT
TC-797 THRU TC-1607
TC-350,TE-1 THRU TE-942 EXCEPT TE-938

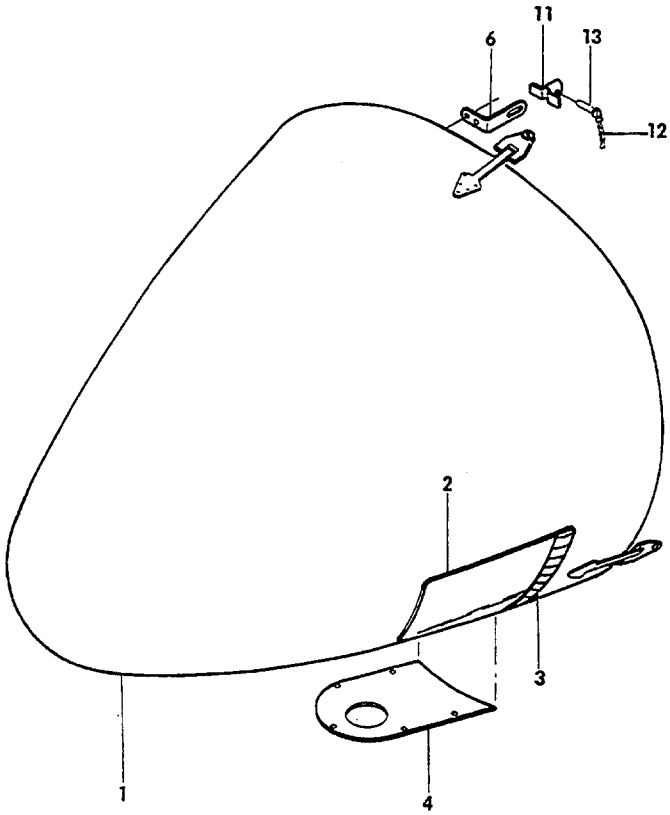

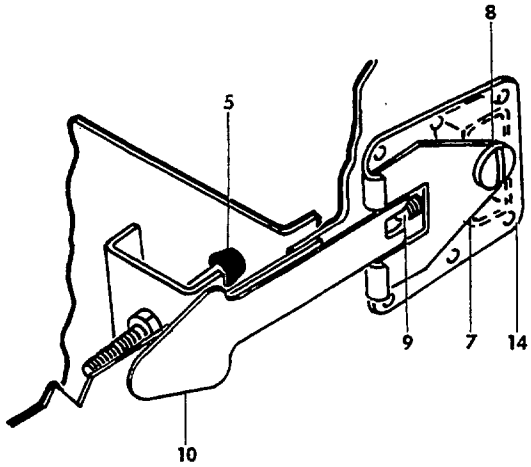

55-109-10

FIGURE 50-20.NOSE CONE

ATA CODE & INDEX NO.	PART NO.	DESCRIPTION 1 2 3 4 5 6 7	UNITS PER ASSY	USABLE ON CODE
50-20	96-410010-655	CONE ASSY,NOSE.	NP	1
	96-410010-650	. CONE ASSY,NOSE.	1	1
- 1	96-410010-1	. . CONE,NOSE	1	1
	95-410040-13	. . BULKHEAD.	1	1
	96-410010-23	. . BULKHEAD.	1	1
	50-410024-13	. . SCOOP	1	2
- 2	96-410010-3	. . DUCT.	1	3
- 3	50-384044	. . HEATER.	1	1
- 4	95-410040-30	. . PLATE	1	1
		/ATTACHING PARTS/		
	99833-6-098	. . AIRLOCK	5	2
	99833C098	. . AIRLOCK	5	3
	98265-1-150	. . STUD.	5	
	99836	. . PIN,STUD.	1	
		——*——		
- 5	507208	. . STOP.	3	1
		/ATTACHING PARTS/		
	AN520R1032	. . SCREW	2	
	AN960-10L	. . WASHER.	2	
	MS20365-1032	. . NUT	2	
		——*——		
	AN935-516	. . WASHER.	2	1
- 6	95-410040-27	. . ANGLE	1	1
- 7	414-184040-1	. . LEVER ASSY.	3	1
		/ATTACHING PARTS/		
- 8	98292-2-170	. . STUD.	1	
	99836	. . PIN,STUD.	1	
	99947P130	. . RECEPTACLE,STUD	1	
		——*——		
- 9	414-184040-19	. . BOLT ASSY	1	1
- 10	414-184040-7	. . STRAP	1	1
	AN960-4	. . WASHER.	3	1
- 11	95-410040-29	. BRACKET	1	1
		/ATTACHING PARTS/		
	AN515-8R	. SCREW	2	
	AN960-8	. WASHER.	2	
		——*——		
- 12	109615-4-081	. CHAIN	1	1
		/ATTACHING PARTS/		
	AN515-6R	. SCREW	1	
	AN960-6	. WASHER.	1	
	AN366-632	. NUTPLATE.	1	
		——*——		
- 13	NAS1334S6S10D	. PIN	1	1
- 14	414-184040-11	. COVER,PLATE	1	1
	414-184040-9	. PLATE	1	1

CODES OF EFFECTIVITY

1 TC-797 THRU TC-1607, TC-350,TE-1 THRU TE-942 EXCEPT TE-938

2 TC-797 THRU TC-954, TC-350 AND TE-1 THRU TE-3

3 TC-955 THRU TC-1607, TC-350,TE-4 THRU TE-942 EXCEPT TE-938

"END"

53-51-01
TAIL CONE

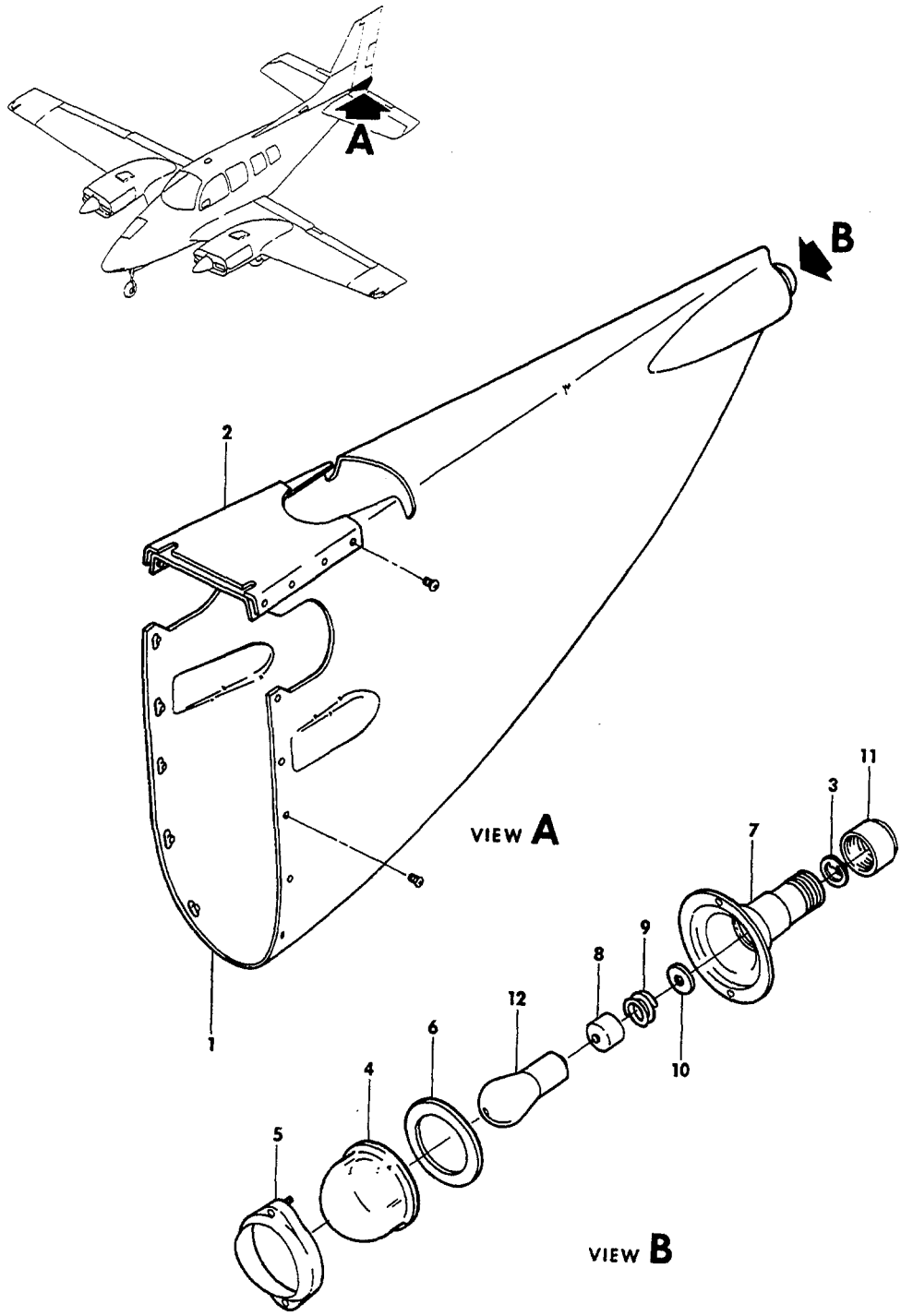

55-109-14

FIGURE 51-01.TAIL CONE

ATA CODE & INDEX NO.	PART NO.	DESCRIPTION 1 2 3 4 5 6 7	UNITS PER ASSY	USABLE ON CODE
51-01	96-440011-601	CONE ASSY,TAIL.	1	1
	96-440011-607	CONE ASSY,TAIL.	1	2
	96-440011-605	CONE ASSY,TAIL/WITH STROBE LIGHT/	1	3
	96-440011-11	CONE ASSY,TAIL/WITH STROBE LIGHT/ . . . . . /ATTACHING PARTS/	1	4
	AN530-8R6	SCREW	10	
	A6191-8Z3	NUTPLATE.	8	
	A6194-8Z1	NUTPLATE.	2	
		----*----		
- 1	96-440011-9	. CONE,TAIL	1	
	96-440011-15	. CONE,TAIL/WITH STROBE LIGHT/.	1	3
- 2	96-440011-5	. COVER . . . . . /ATTACHING PARTS/	1	
	AN520-1032	. SCREW	8	
	MS21069L3	. NUTPLATE.	8	
		----*----		
	95-360000-605	. LIGHT ASSY.	1	1
	58-364000-601	. HARNESS	1	2
- 3	AN3111-2	. . RING,CONNECTOR BONDING.	1	
	A2064-1683	. . LIGHT ASSY,CLEAR/24 VOLT/ . . . . . /ATTACHING PARTS/	1	
	MS35206-232	. . SCREW	2	
	MS21075L06	. . NUTPLATE.	2	
		----*----		
- 4	A4513-1	. . . LENS.	1	
- 5	A2108	. . . RETAINER.	1	
- 6	A2109-2	. . . GASKET.	1	
- 7	A3510	. . . BASE AND SOCKET ASSY.	1	
- 8	A4490-3	. . . CONTACT ASSY.	1	
- 9	A1783	. . . SPRING.	1	
- 10	A4149	. . . INSULATOR	1	
- 11	A6194-8Z1	. . . NUT	1	
- 12	1683	. . . BULB.	1	

NOTE FOR STROBE LIGHT INSTL,SEE CHAPTER 33.

CODES OF EFFECTIVITY

1 TC-1 THRU TC-1607 EXCEPT TC-350
2 TC-350,TE-1 THRU TE-942 EXCEPT TE-938
3 TC-1299 THRU TC-1601 TE-768 THRU TE-939 EXCEPT TE-938
4 TC-1602 THRU TC-1607 TE-940 THRU TE-942

"END"

53-52-01
DORSAL FAIRING
TC-1 THRU TC-954 EXCEPT TC-350

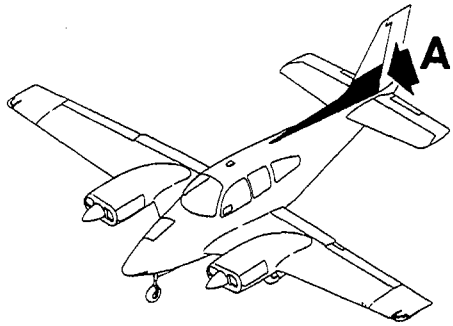

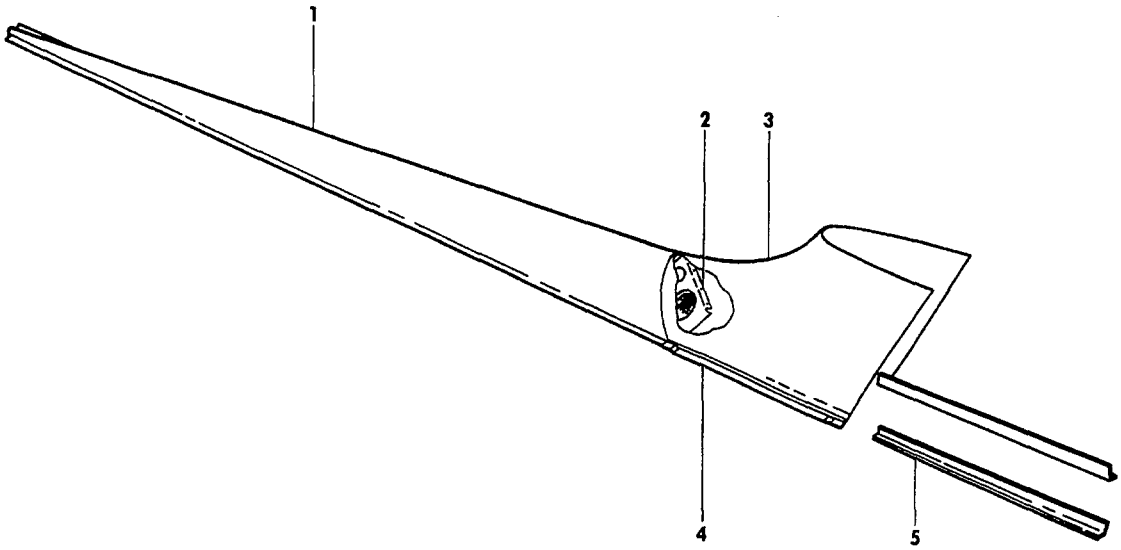

VIEW **A**

55-134-13

FIGURE 52-01.DORSAL FAIRING

ATA CODE & INDEX NO.	PART NO.	DESCRIPTION 1 2 3 4 5 6 7	UNITS PER ASSY	USABLE ON CODE
52-01	96-440010	FAIRING INSTALLATION,DORSAL	NP	1
	96-440010-603	. DORSAL ASSEMBLY	1	1
- 1	96-440010-1	. . SKIN.	1	1
- 2	96-440010-7	. . RIB	1	1
- 3	96-440010-19	. SADDLE,DORSAL	1	1
- 4	96-440010-17	. ANGLE,LH.	1	1
	96-440010-18	. ANGLE,RH.	1	1
- 5	96-440010-11	. SKIN,LH CLOSURE	1	1
	96-440010-12	. SKIN,RH CLOSURE	1	1
	AN525-10	. SCREW	AR	1

CODES OF EFFECTIVITY

1 TC-1 THRU TC-954
EXCEPT TC-350

"END"

53-52-02
DORSAL FAIRING
TC-350,TC-955 THRU TC-1091
TE-1 THRU TE-558

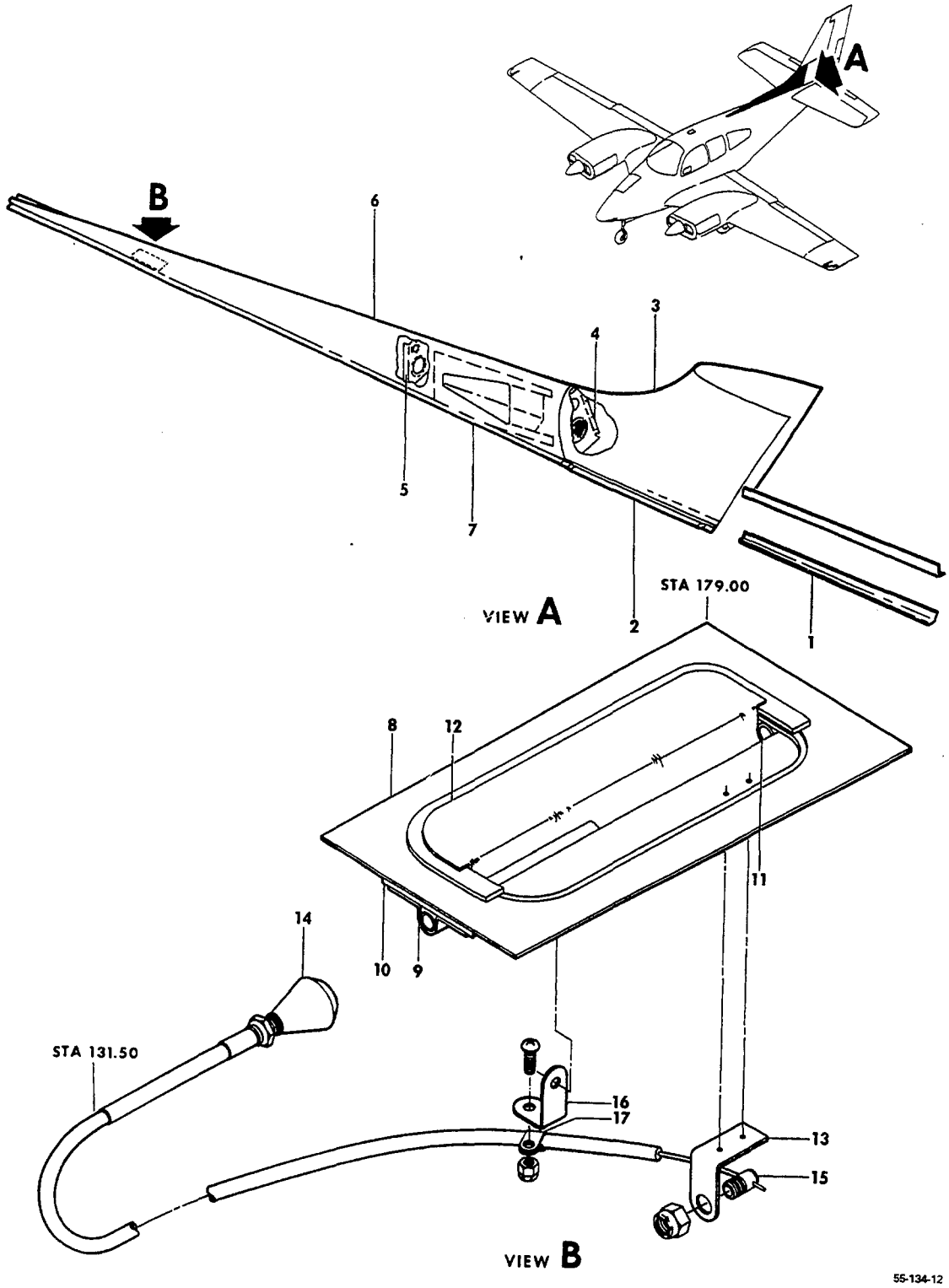

FIGURE 52-02.DORSAL FAIRING

SUB-SECT UNIT & ITEM NO.	PART NO.	DESCRIPTION 1 2 3 4 5 6 7	UNITS PER ASSY	USABLE ON CODE
52-02	96-440015	FAIRING INSTALLATION,DORSAL	NP	2
	96-440015-11	FAIRING INSTALLATION,DORSAL	NP	3
	96-440015-61	. SADDLE ASSEMBLY,DORSAL.	1	4
	96-440015-63	. SADDLE ASSEMBLY,DORSAL.	1	5
		/ATTACHING PARTS/		
	AN525-10	. SCREW	22	
		——*——		
- 1	96-440010-11	. . SKIN,LH CLOSURE	1	1
	96-440010-12	. . SKIN,RH CLOSURE	1	1
- 2	96-440010-17	. . ANGLE,LH.	1	1
	96-440010-18	. . ANGLE,RH.	1	1
- 3	96-440010-19	. . SKIN,SADDLE	1	4
	96-440015-39	. . SKIN,SADDLE	1	5
	96-440015-607	. SKIN ASSEMBLY,DORSAL.	1	1
- 4	96-440010-7	. . RIB,BULKHEAD.	1	1
- 5	96-440015-45	. . RIB,BULKHEAD.	1	1
- 6	96-440015-7	. . SKIN,DORSAL	1	1
- 7	96-440015-9	. . PAN,DUCT/AIR INLET/	1	1
	50-554242-3	. . DUCT,AIR INLET.	1	1
	96-555013-31	. . SCREEN,AIR INLET.	1	1
	96-440015-5	. DOUBLER,CABIN AIR	1	2
	R 96-440015-15	. SHUT OFF INSTALLATION,CABIN AIR	NP	3
- 8	96-440015-13	. . DOUBLER,CABIN AIR	1	3
- 9	96-440015-19	. . CLAMP,SHUT OFF DOOR	2	3
- 10	96-440015-21	. . SPACER.	1	3
- 11	96-440015-31	. . BEARING	2	3
	96-440015-17	. . SHAFT,SHUT OFF DOOR	1	3
- 12	96-440015-23	. . DOOR,SHUT OFF	1	3
- 13	96-440015-37	. . BRACKET,SHUT OFF DOOR	1	3
	96-440015-27	. . SEAL,LOWER.	1	3
	96-440015-28	. . SEAL,UPPER.	1	3
- 14	35-380051-3	. . CONTROL,CABIN AIR	1	3
		/ATTACHING PARTS/		
- 15	35-550520	. . PIN	1	3
	102933S4ZJ0093	. . SPACER.	1	3
	AN960-10	. . WASHER.	1	
	MS20365-1032	. . NUT	1	
		——*——		
- 16	AN743-13	. . BRACKET	1	3
		/ATTACHING PARTS/		
	AN515-8R	. . SCREW	1	
	MS20365-832	. . NUT	1	
		——*——		
- 17	AN742-3	. . CLAMP	1	3
		/ATTACHING PARTS/		
	AN515-10R	. . SCREW	1	
	MS20365-1032	. . NUT	1	
		——*——		

CODES OF EFFECTIVITY

1	TC-955 THRU TC-1091 TE-1 THRU TE-558 AND TC-350	2	TC-955 THRU TC-968 AND TE-1
3	TC-969 THRU TC-1091 TE-2 THRU TE-558 AND TC-350	4	TC-955 THRU TC-1033 TE-1 THRU TE-380 AND TC-350
5	TC-1034 THRU TC-1091		

"END"

53-52-03
DORSAL FAIRING
TC-1092 THRU TC-1607 AND TE-559 THRU TE-942
EXCEPT TE-938

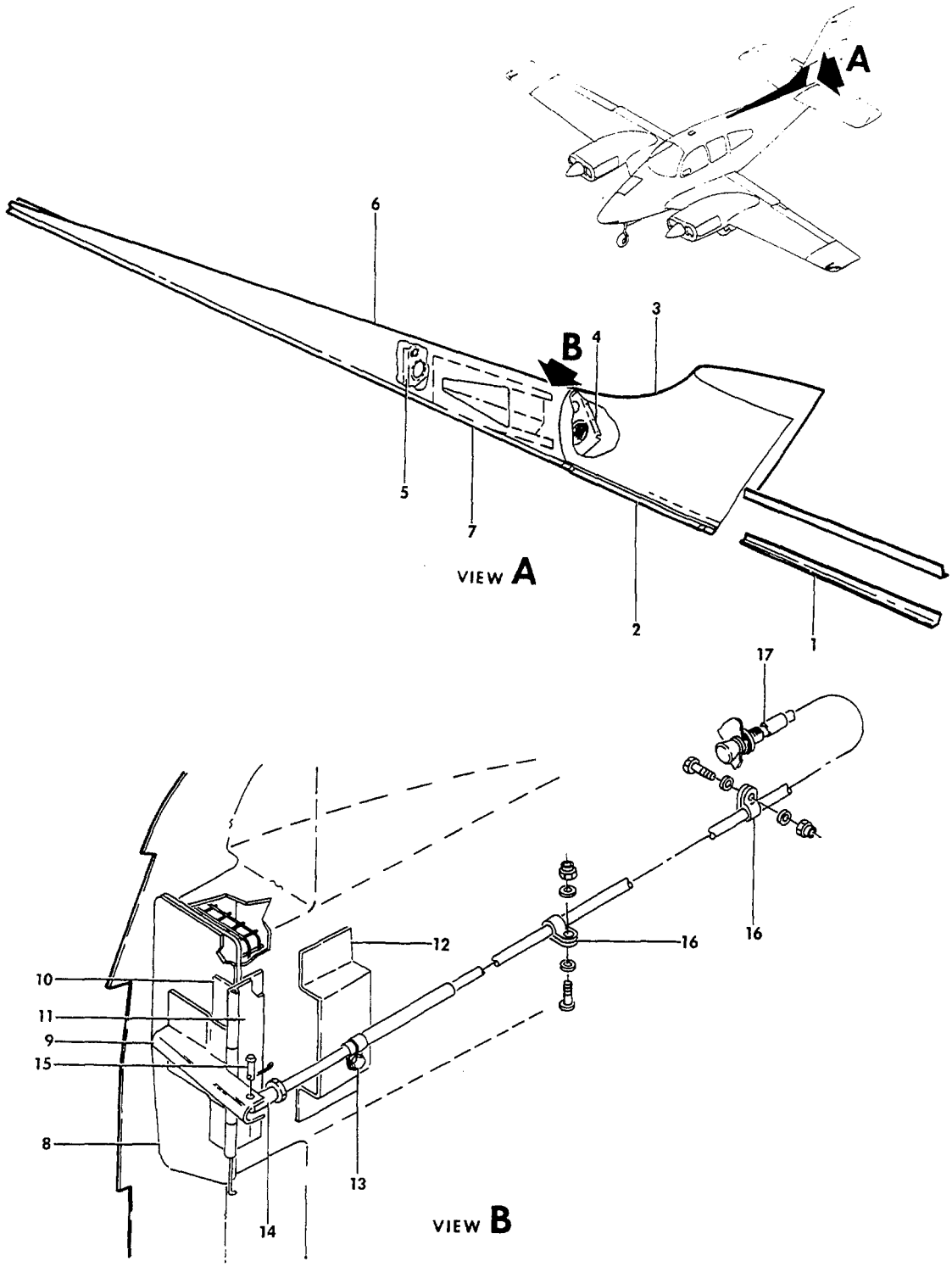

FIGURE 52-03.DORSAL FAIRING

ATA CODE & INDEX NO.	PART NO.	DESCRIPTION 1 2 3 4 5 6 7	UNITS PER ASSY	USABLE ON CODE
52-03	96-440015-43	FAIRING INSTALLATION,DORSAL	NP	1
	96-440015-63	. SADDLE ASSEMBLY,DORSAL	1	1
- 1	96-440010-11	. . SKIN,FAIRING LH	1	1
	96-440010-12	. . SKIN,FAIRING RH	1	1
- 2	96-440010-17	. . ANGLE,LH	1	1
	96-440010-18	. . ANGLE,RH	1	1
- 3	96-440015-39	. . SADDLE,DORSAL	1	1
		/ATTACHING PARTS/		
	AN525-10R8	. . SCREW	48	
		——*——		
	96-440015-618	. DORSAL FIN ASSY	1	1
	96-440015-41	. . BULKHEAD ASSY	1	1
- 4	96-440010-7	. . . RIB	1	1
	96-440015-51	. . BULKHEAD ASSY	1	1
- 5	96-440015-45	. . . BULKHEAD	1	1
- 6	96-440015-7	. . SKIN,DORSAL	1	1
- 7	96-440015-9	. . PAN,AIR INLET DORSAL	1	1
	50-554242-3	. . DUCT,DORSAL PAN	1	1
	96-555013-31	. . SCREEN,DUCT	1	1
	96-555013-3	. . DOOR ASSY	1	1
	96-555013-9	. . . PAD	1	1
- 8	96-555013-23	. . . DOOR,AIR INLET	1	1
- 9	96-555013-25	. . . ARM,DOOR	1	1
- 10	96-555013-19	. . . HINGE,HALF	1	1
- 11	96-555013-17	. . HINGE,HALF	1	1
	96-555013-21	. . PIN,HINGE	1	1
- 12	96-555013-35	. . BRACKET,CONTROL CABLE	1	1
	96-555013-29	. . SPACER	1	1
- 13	MS21910G5	. CLAMP,CONTROL CABLE	2	1
		/ATTACHING PARTS/		
	AN3-4A	. BOLT	1	
	AN960-10L	. WASHER	3	
	100696DZC003	. SPACER	1	
		——*——		
- 14	96-555013-37	. LINK,CONTROL CABLE	1	1
	AN345-10	. NUT,CABLE LINK	1	1
- 15	MS20392-1C13	. PIN,CABLE LINK	1	1
	MS24665-132	. PIN,COTTER	1	1
- 16	MS21919DG5	. CLAMP,CONTROL CABLE	2	1
		/ATTACHING PARTS/		
	AN515-10R	. SCREW	2	
	AN960-10	. WASHER	2	
	MS20365-1032	. NUT	2	
		——*——		
- 17	95-380005-9	. CABLE,CONTROL	1	1
	130-032-331	. CABLE,CONTROL	1	1

CODES OF EFFECTIVITY

1 TC-1092 THRU TC-1607
TE-559 THRU TE-942
EXCEPT TE-938

"END"

CHAPTER

54

NACELLES PYLONS

LIST OF PAGES & TABLE OF CONTENTS
FOR
CHAPTER 54-00-00 NACELLES

CHAP/SUB-SECT & UNIT	PAGE NO.	EFFECTIVE DATE	TABLE OF CONTENTS
54-00-00	1	04/30/84	LIST OF PAGES & TABLE OF CONTENTS
54-10-01	1	03/10/78	NACELLE STRUCTURE
54-10-01	2	03/10/78	
54-10-01	3	03/10/78	
54-10-01	4	03/10/78	
54-10-01	5	03/10/78	
54-10-01	6	03/10/78	
54-10-01	7	03/10/78	
54-10-01	8	03/10/78	
54-10-01	9	03/10/78	
54-10-01	10	03/10/78	
54-10-01	11	03/10/78	
54-30-01	1	03/10/78	NACELLE SKINS
54-30-01	2	03/10/78	
54-30-01	3	03/10/78	
54-50-01	1	03/10/78	NACELLE FAIRINGS AND FILLETS
54-50-01	2	03/10/78	
54-50-01	3	03/10/78	

54-10-01
NACELLE STRUCTURE

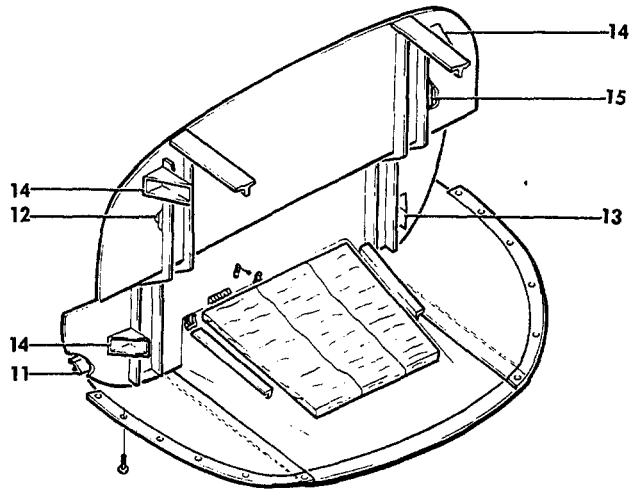

VIEW A

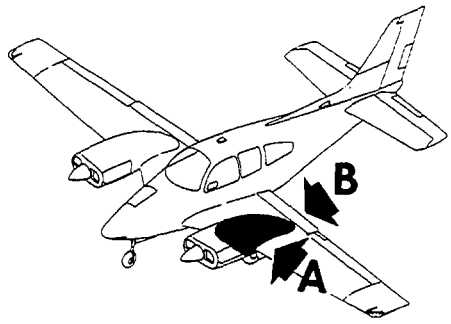

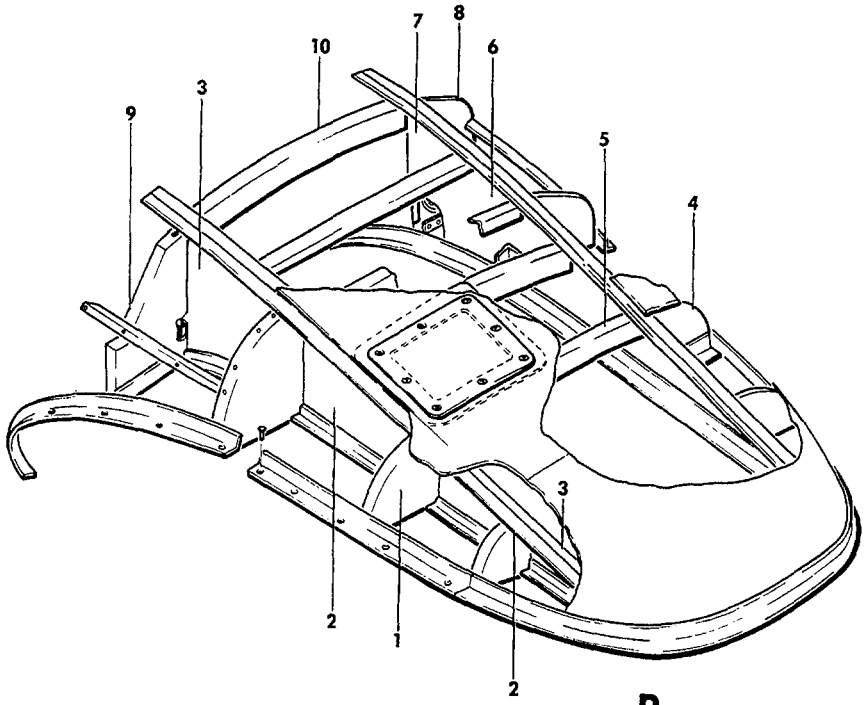

VIEW B

55-65-5

FIGURE 10-01.NACELLE STRUCTURE
/SHEET 1 OF 5 SHEETS/

ATA CODE & INDEX NO.	PART NO.	DESCRIPTION 1 2 3 4 5 6 7	UNITS PER ASSY	USABLE ON CODE
10-01	96-980001-1	NACELLE INSTALLATION,LH	NP	1
	96-980001-107	NACELLE INSTALLATION,LH	NP	2
	96-980001-2	NACELLE INSTALLATION,RH	NP	1
	96-980001-108	NACELLE INSTALLATION,RH	NP	2
	96-980001-601	. NACELLE ASSEMBLY,LH	1	1
	96-980001-609	. NACELLE ASSEMBLY,LH	1	2
	96-980001-602	. NACELLE ASSEMBLY,RH	1	1
	96-980001-610	. NACELLE ASSEMBLY,RH	1	2
- 1	95-980001-35	. . FORMER,LH	1	
	95-980001-36	. . FORMER,RH	1	
- 2	96-980001-39	. . WEB,LH OUTBD.	1	
	96-980001-40	. . WEB,RH OUTBD.	1	
	AN366-428	. . NUTPLATE.	4	
- 3	96-980001-41	. . WEB,LH OUTBD FULL	1	
	96-980001-42	. . WEB,RH OUTBD FULL	1	
	130909N33	. . NUTPLATE/SUPERSEDES AN366-1032/	2	
- 4	95-980001-75	. . FORMER,LH INBD AFT.	1	
	95-980001-76	. . FORMER,RH INBD AFT.	1	
- 5	95-980001-79	. . SPREADER,AFT.	1	
- 6	96-980001-53	. . WEB,LH INBD FULL.	1	
	96-980001-54	. . WEB,RH INBD FULL.	1	
	AN366DF428	. . NUTPLATE/RH ONLY/	2	
- 7	96-980001-51	. . WEB,LH INBD PARTIAL	1	
	96-980001-52	. . WEB,RH INBD PARTIAL	1	
	AN743-13	. . BRACKET	1	
- 8	96-980001-35	. . FORMER,LH INBD FWD.	1	
	96-980001-36	. . FORMER,RH INBD FWD.	1	
	MS21047L08	. . NUTPLATE/SUPERSEDES AN366F832/.	4	
- 9	96-980001-33	. . FORMER,LH OUTBD	1	
	96-980001-34	. . FORMER,RH OUTBD	1	
- 10	95-980001-99	. . SPREADER,FWD.	1	
	MS21047L06	. . NUTPLATE/SUPERSEDES AN366F632/.	1	
	MS21051L06	. . NUTPLATE/SUPERSEDES 22NA17A62/.	1	
	MS21051L3	. . NUTPLATE/SUPERSEDES K2000-1032/	1	
	MS21047L08	. . NUTPLATE/SUPERSEDES AN366F832/.	1	
- 11	96-980001-3	. . CHANNEL,LOWER FIREWALL SUPPORT.	1	
	96-980001-5	. . CHANNEL,UPPER FIREWALL SUPPORT.	1	
- 12	96-910001-29	. . BRACKET,LH FIREWALL TUBE SUPPORT.	1	1
	96-980010	. . BRACKET,LH FIREWALL TUBE SUPPORT.	1	2
	MS25083-2BC6	. . WIRE,BONDING/SUPERSEDES MS25083-18C6/	1	
- 13	95-980015-1	. . LUG,LOWER INBD ENGINE MOUNT	1	
		/ATTACHING PARTS/		
	NAS1466-5	. . HUCKBOLT.	6	
	LC-C6	. . COLLAR.	6	
		----*----		
- 14	95-980015-3	. . LUG,LOWER OUTBD,UPPER INBD & OUTBD.	3	
		/ATTACHING PARTS/		
	NAS1466-5	. . HUCKBOLT/SUPERSEDES ALPPH-T6-5/	8	
	NAS1466-6	. . HUCKBOLT/SUPERSEDES ALPPH-T6-6/	16	
	LC-C6	. . COLLAR.	24	
		----*----		
- 15	96-980001-105	. . DOUBLER,LH OIL SEPARATOR.	1	
	96-980001-106	. . DOUBLER,RH OIL SEPARATOR.	1	

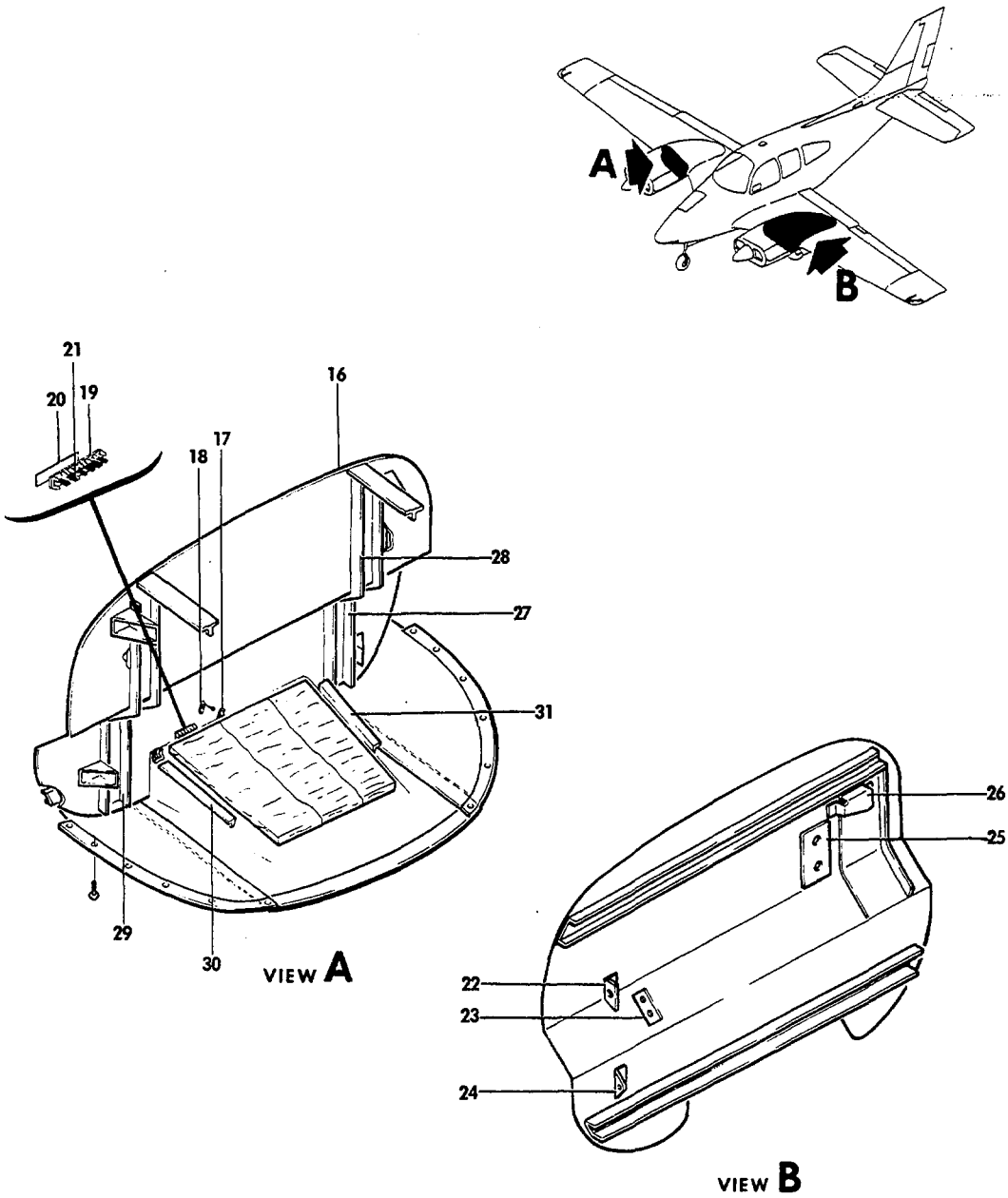

55-65-6

FIGURE 10-01.NACELLE STRUCTURE
/SHEET 2 OF 5 SHEETS/

ATA CODE & INDEX NO.	PART NO.	DESCRIPTION 1 2 3 4 5 6 7	UNITS PER ASSY	USABLE ON CODE
10-01 - 16	96-980001-7	. . WEB,LH FIREWALL	1	3
	96-980001-96	. . WEB,LH FIREWALL	1	4
	96-980001-91	. . WEB,LH FIREWALL	1	5
	96-980001-109	. . WEB,LH FIREWALL	1	6
	96-980001-8	. . WEB,RH FIREWALL	1	3
	96-980001-97	. . WEB,RH FIREWALL	1	4
	96-980001-92	. . WEB,RH FIREWALL	1	5
	96-980001-110	. . WEB,RH FIREWALL	1	6
	96-980001-95	. . DOUBLER,R & LH FIREWALL	1	7
- 17	96-980012	. . GROMMET,FIREWALL ELECTRICAL HARNESS	4	8
	96-980012-1	. . GROMMET,FIREWALL ELECTRICAL HARNESS	4	9
		/ATTACHING PARTS/		
- 18	MS35206-228	. . SCREW/SUPERSEDES AN515R6-6/	4	
	MS21042L06	. . NUT/SUPERSEDES AN365-632/	4	
		----*----		
	MS35207-282	. . SCREW/SUPERSEDES AN520-416R14/.	1	
	AN960-416	. . WASHER.	3	
	MS35338-44	. . WASHER/SUPERSEDES AN935-416/.	1	
	AN315-4R	. . NUT	1	
	AN316-4R	. . NUT	1	
- 19	AN3435-2-12	. . BLOCK,TERMINAL.	1	
		/ATTACHING PARTS/		
	MS35206-215	. . SCREW/SUPERSEDES AN515-4-6/	2	
	MS35338-40	. . WASHER/SUPERSEDES AN935-4L/	2	
	AN960-4L	. . WASHER.	2	
	MS35649-242	. . NUT/SUPERSEDES AN340-4/	2	
		----*----		
- 20	AN3437-1-13	. . STRIP,INSULATION.	1	
- 21	AN3432-6-12	. . STUD.	12	
	AN960-6	. . WASHER.	12	
	MS35649-265T	. . NUT/SUPERSEDES AN341-6/	12	
- 22	96-980011	. . BRACKET,VACUUM LINE SUPPORT/RH ONLY/. . . .	1	2
	96-980001-101	. . REINFORCEMENT,VACUUM LINE BRACKET/RH ONLY/.	2	2
- 23	95-910001-151	. . ANGLE,TUBE SUPPORT/RH ONLY/	1	1
- 24	95-910001-195	. . BRACKET,TUBE SUPPORT/RH ONLY/	1	1
- 25	96-980001-95	. . DOUBLER,FUEL LINE FIREWALL/SUPERSEDES . . .	1	
		96-980001-89 DOUBLER/		
- 26	95-910001-43	. . BRACKET,VACUUM OIL SEPARATOR SUPPORT. . . .	1	10
	96-910001-161	. . BRACKET,VACUUM OIL SEPARATOR SUPPORT. . . .	1	11
	AN366-1032	. . NUTPLATE.	2	1
- 27	96-980001-69	. . PLATE	2	
	ALPPH-T6-4	. HUCKBOLT.	8	
	LC-C6	. COLLAR.	8	
	AN4-6A	. BOLT.	7	
	AN960-416	. WASHER.	7	
	AN365-428	. NUT	7	
- 28	96-980001-57	. TIE,FWD LH INBD UPPER	1	
	96-980001-58	. TIE,FWD RH INBD UPPER	1	
		/ATTACHING PARTS/		
	AN515-8R7	. SCREW	5	
		----*----		
- 29	96-980001-43	. TIE,FWD LH OUTBD LOWER.	1	
	96-980001-44	. TIE,FWD RH OUTBD LOWER.	1	
- 30	95-980001-155	. TIE,NOSE LH OUTBD	1	
	95-980001-156	. TIE,NOSE RH OUTBD	1	
- 31	96-980001-59	. TIE,NOSE LH INBD.	1	
	96-980001-60	. TIE,NOSE RH INBD.	1	

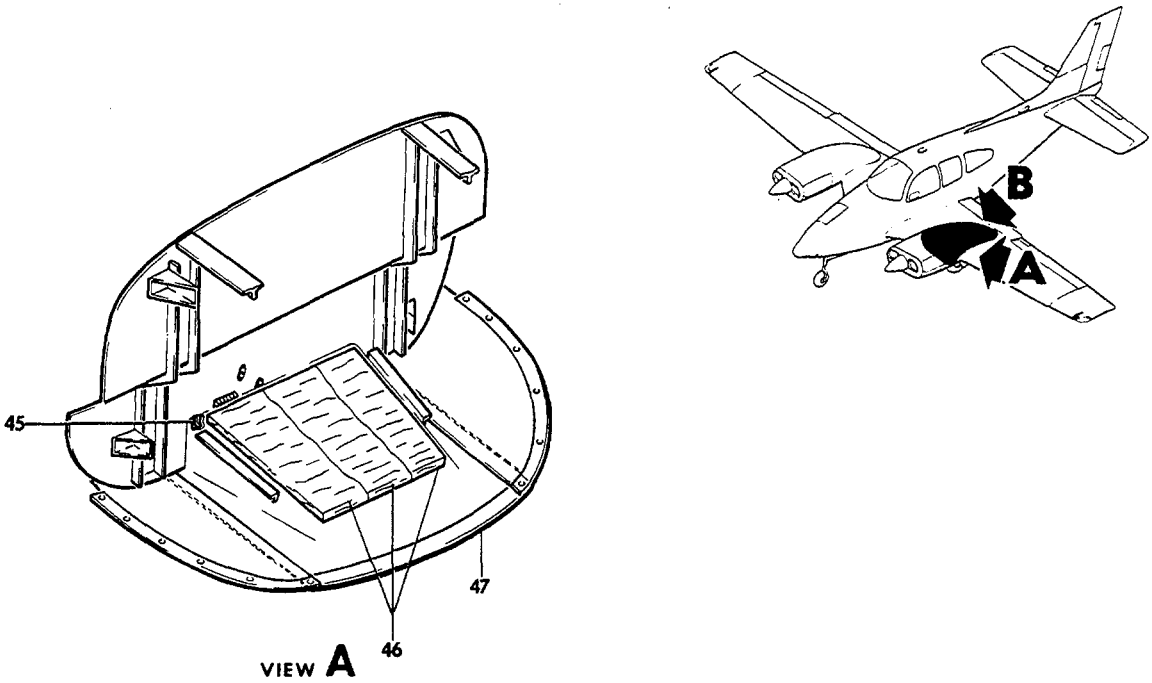

VIEW A

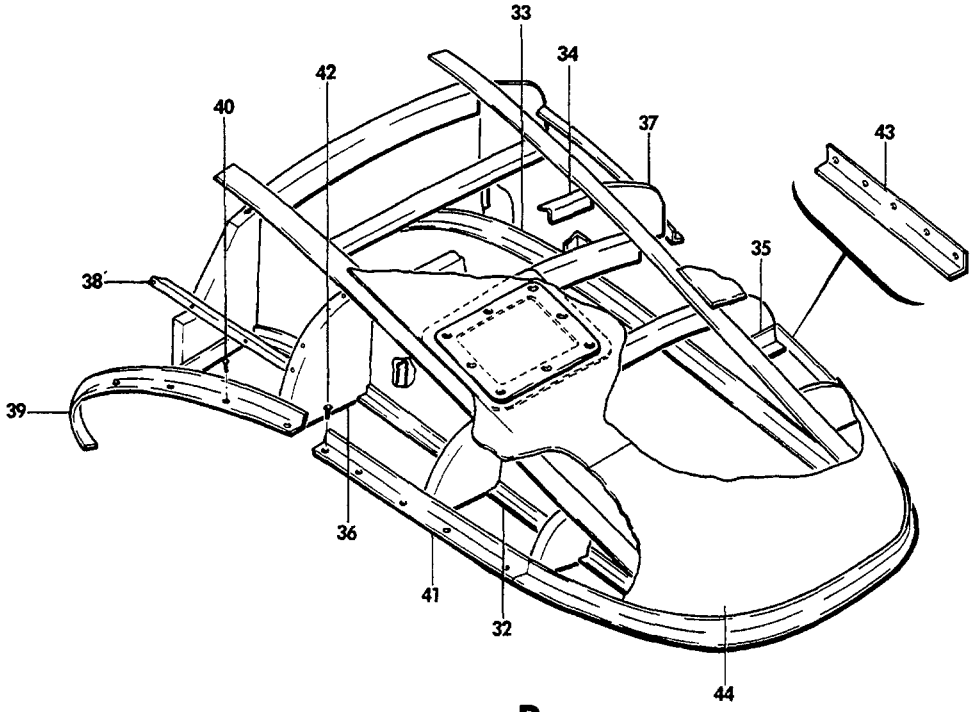

VIEW B

55-65-7

FIGURE 10-01.NACELLE STRUCTURE
/SHEET 3 OF 5 SHEETS/

ATA CODE & INDEX NO.	PART NO.	DESCRIPTION 1 2 3 4 5 6 7	UNITS PER ASSY	USABLE ON CODE
10-01 - 32	95-980001-153	TEE,LH OUTBD WEB LOWER	1	
	95-980001-154	TEE,RH OUTBD WEB LOWER	1	
		/ATTACHING PARTS/		
	AN3-3A	BOLT/SUPERSEDES AN525-10R8 SCREW/	10	
	AN366F1032	NUTPLATE	10	
	MS20004-16	BOLT	2	
	MS20002C4	WASHER	2	
	MS21047L4	NUTPLATE	2	
		----*----		
- 33	95-980001-173	TEE,LH INBD WEB LOWER	1	
	95-980001-174	TEE,RH INBD WEB LOWER	1	
		/ATTACHING PARTS/		
	AN3-3A	BOLT/SUPERSEDES AN525-10R8 SCREW/	6	
	AN366F1032	NUTPLATE	6	
	MS20004-16	BOLT	2	
	MS20002C4	WASHER	2	
	AN365F428	NUTPLATE	2	
		----*----		
- 34	95-980001-175	SPREADER,NACELLE	1	
- 35	95-980001-165	ANGLE	2	
- 36	95-980001-161	FORMER,LH OUTBD NACELLE	1	
	95-980001-162	FORMER,RH OUTBD NACELLE	1	
- 37	95-980001-163	FORMER,LH INBD NACELLE	1	
	95-980001-164	FORMER,RH INBD NACELLE	1	
- 38	96-980001-49	ANGLE,LH OUTBD STIFFENER	1	
	96-980001-50	ANGLE,RH OUTBD STIFFENER	1	
- 39	96-980001-37	ANGLE,ATTACH OUTBD FWD/LH NACELLE/	1	
	96-980001-38	ANGLE,ATTACH OUTBD FWD/RH NACELLE/	1	
		/ATTACHING PARTS/		
- 40	AN525-10R7	SCREW	9	
	AN366F1032	NUTPLATE	9	
		----*----		
- 41	95-980001-93	ANGLE,LH OUTBD ATTACH	1	
	95-980001-94	ANGLE,RH OUTBD ATTACH	1	
		/ATTACHING PARTS/		
- 42	AN525-10R7	SCREW	5	
	AN366F1032	NUTPLATE	5	
		----*----		
- 43	95-980001-67	ANGLE,LH INBD ATTACH	1	
	95-980001-68	ANGLE,RH INBD ATTACH	1	
- 44	96-980001-83	CAP,LH	1	
	96-980001-84	CAP,RH	1	
- 45	96-980001-75	LIP	1	
	MS21047L08K	NUTPLATE/SUPERSEDES 22NA1-82BC/	12	
- 46	96-980001-79	BLANKET,INSULATION	2	
- 47	96-980001-9	TROUGH,LH	1	
	96-980001-10	TROUGH,RH	1	

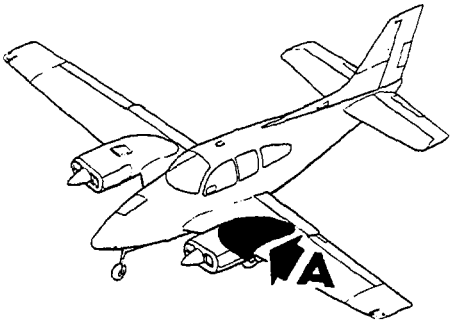

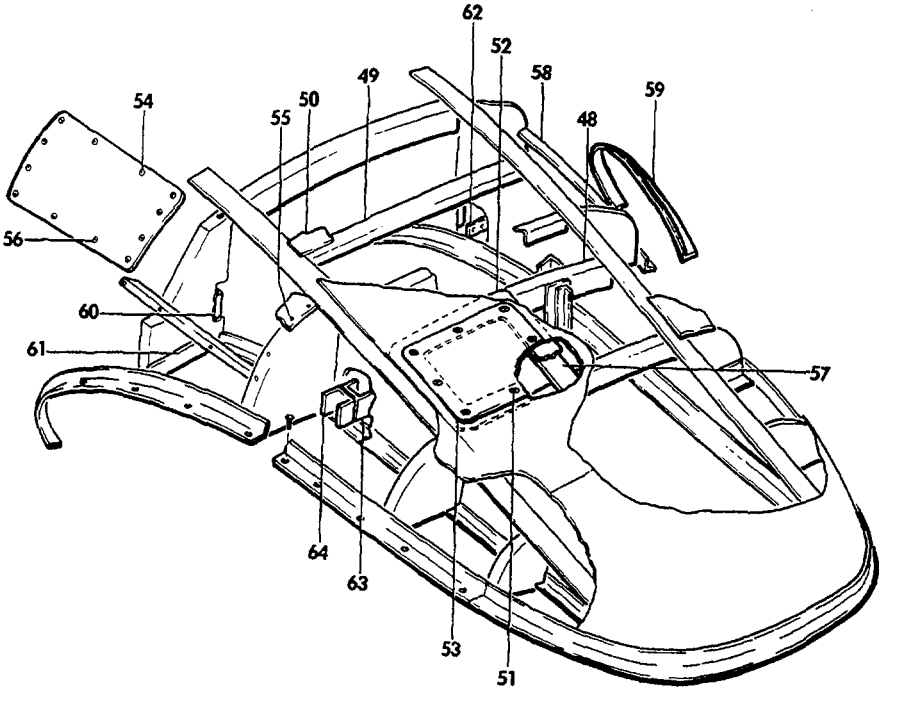

55-65-8

FIGURE 10-01. NACELLE STRUCTURE
/SHEET 4 OF 5 SHEETS/

ATA CODE & INDEX NO.	PART NO.	DESCRIPTION 1 2 3 4 5 6 7	UNITS PER ASSY	USABLE ON CODE
10-01 - 48	95-980001-73	. SPREADER,MID NACELLE.	1	
- 49	95-980001-195	. ANGLE,UPPER FWD	1	
- 50	96-980001-85	. DOUBLER,UPPER FWD NACELLE SKIN.	1	
	AN366F1032	. NUTPLATE/LH ONLY/	12	
	95-980001-603	. DOOR & DOUBLER ASSY LH.	1	
	95-980001-604	. DOOR & DOUBLER ASSY RH.	1	
		/ATTACHING PARTS/		
- 51	AN507-832R8	. SCREW	12	
	NAS681A08K	. NUTPLATE.	12	
		----*----		
- 52	95-980001-183	. . DOUBLER,LH.	1	
	96-980002-13	. . DOUBLER,LH/WITH SURFACE DEICE/.	1	
	95-980001-184	. . DOUBLER,RH.	1	
	96-980002-14	. . DOUBLER,RH/WITH SURFACE DEICE/.	1	
- 53	95-980001-185	. . DOOR,LH UPPER NACELLE	1	
	96-980002-15	. . DOOR,LH UPPER NACELLE/WITH SURFACE DEICE/ .	1	
	95-980001-186	. . DOOR,RH UPPER NACELLE	1	
	96-980002-16	. . DOOR,RH UPPER NACELLE/WITH SURFACE DEICE/ .	1	
	96-980001-605	. DOOR & DOUBLER ASSY,LH.	1	
	96-980001-606	. DOOR & DOUBLER ASSY,RH.	1	
		/ATTACHING PARTS/		
- 54	F4-30	. STUD,FASTENER	26	
	S4-250	. SPRING.	26	
	4	. RING,RETAINER	26	
		----*----		
- 55	96-980001-15	. . DOUBLER,LH/LH & RH NACELLE/	1	
	96-980001-16	. . DOUBLER,RH/LH & RH NACELLE/	1	
- 56	96-980001-13	. . DOOR,LH/LH & RH NACELLE/.	1	
	96-980001-14	. . DOOR,RH/LH & RH NACELLE/.	1	
- 57	95-980001-149	. ANGLE	1	
	95-980001-150	. ANGLE	1	
- 58	96-980001-61	. ANGLE,LH INBD STIFFENER	1	
	96-980001-62	. ANGLE,RH INBD STIFFENER	1	
- 59	96-980001-21	. ANGLE,ATTACH INBD FWD/LH NACELLE/	1	
	96-980001-22	. ANGLE,ATTACH INBD FWD/RH NACELLE/	1	
		/ATTACHING PARTS/		
	AN525-10R7	. SCREW	9	
	AN366F1032	. NUTPLATE.	9	
		----*----		
- 60	96-980001-47	. PLATE,LH.	1	
	96-980001-55	. PLATE,RH.	1	
- 61	95-980001-181	. ANGLE	1	
- 62	95-980001-87	. ANGLE	1	
- 63	95-980001-171	. FILLER.	2	
- 64	95-980017-1	. TIE,SPAR.	2	
	95-980017-2	. TIE,SPAR.	2	
	MS27039-0814	. SCREW	4	
	AN960-8	. WASHER.	4	
	MS21042L08	. NUTPLATE.	4	

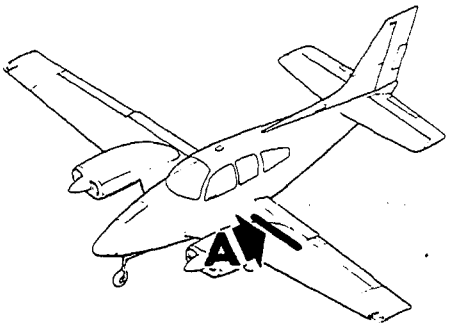

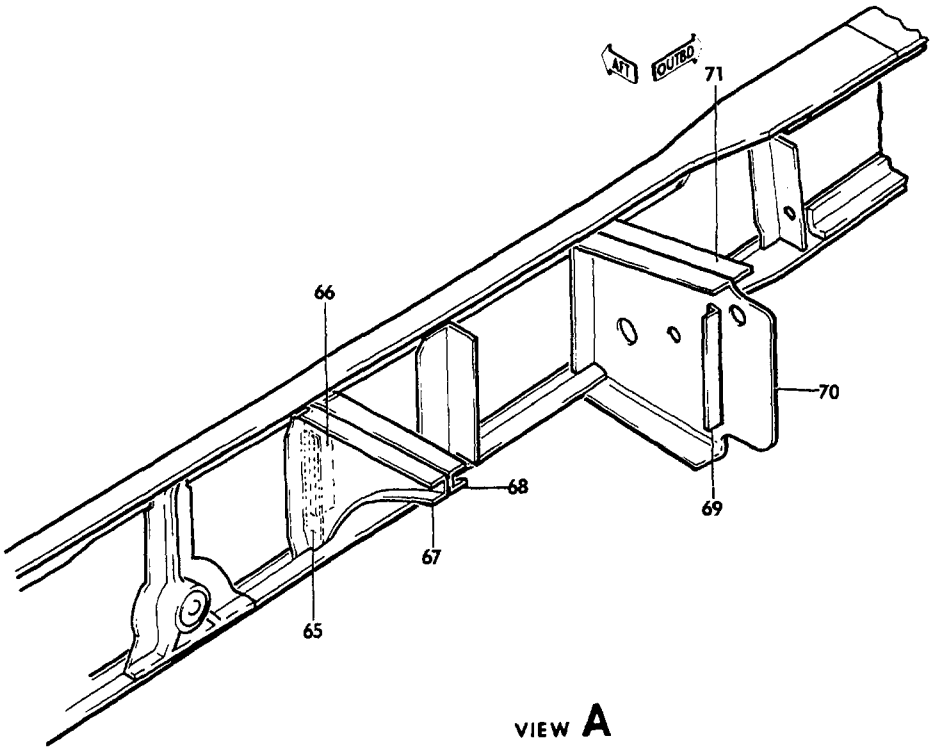

VIEW **A**

55-65-9

FIGURE 10-01.NACELLE STRUCTURE
/SHEET 5 OF 5 SHEETS/

ATA CODE & INDEX NO.	PART NO.	DESCRIPTION 1 2 3 4 5 6 7	UNITS PER ASSY	USABLE ON CODE
10-01 - 65	95-980001-211	. REINFORCEMENT	1	
- 66	95-980001-113	. FILLER,INBD	1	
- 67	95-980001-19	. TIE,SPAR INBD LH.	1	
	95-980001-20	. TIE,SPAR INBD RH.	1	
		/ATTACHING PARTS/		
	AN4-6A	. BOLT.	2	
	AN960-416	. WASHER.	2	
	AN365-428	. NUT	2	
		----*----		
- 68	95-980001-209	. TIE,SPAR INBD LH.	1	
	95-980001-210	. TIE,SPAR INBD RH.	1	
- 69	95-980001-119	. ANGLE,LH.	1	
	95-980001-120	. ANGLE,RH.	1	
- 70	95-980001-117	. TIE,SPAR OUTBD LH	1	
	95-980001-118	. TIE,SPAR OUTBD RH	1	
- 71	95-980001-115	. TIE,SPAR OUTBD LH	1	
	95-980001-116	. TIE,SPAR OUTBD RH	1	

CODES OF EFFECTIVITY

1 TC-1 THRU TC-1607
2 TE-1 THRU TE-942 EXCEPT TE-938
3 TC-1 THRU TC-420
4 TC-421 THRU TC-1607
5 TE-1 THRU TE-451
6 TE-452 THRU TE-942 EXCEPT TE-938
7 TC-421 THRU TC-1607 TE-1 THRU TE-942 EXCEPT TE-938
8 TC-1 THRU TC-1489 TE-1 THRU TE-882
9 TC-1490 THRU TC-1607 TE-883 THRU TE-942 EXCEPT TE-938
10 TC-1 THRU TC-1591
11 TC-1592 THRU TC-1607

"END"

54-30-01
NACELLE SKINS

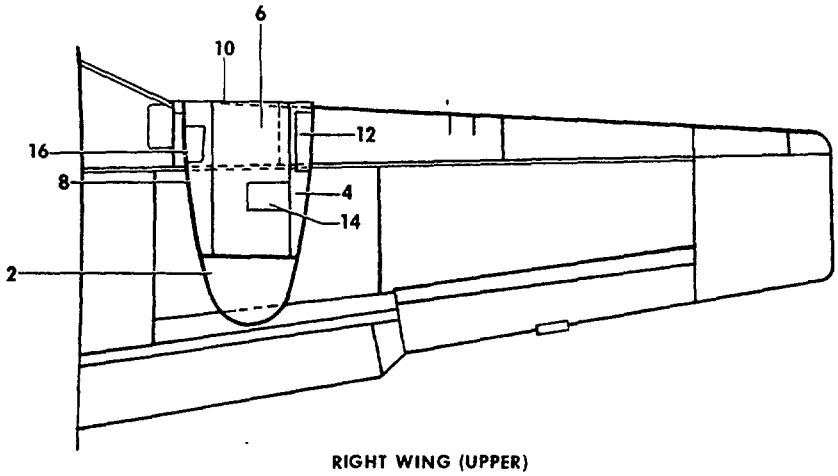

RIGHT WING (UPPER)

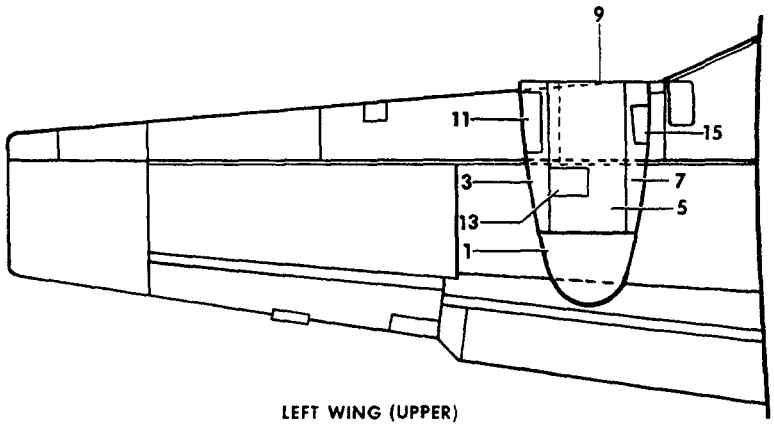

LEFT WING (UPPER)

B55-14-2

FIGURE 30-01.NACELLE SKINS

ATA CODE & INDEX NO.	PART NO.	DESCRIPTION 1 2 3 4 5 6 7	UNITS PER ASSY	USABLE ON CODE
30-01 - 1	96-980001-83	SKIN,NACELLE CAP AFT LH	1	
- 2	96-980001-84	SKIN,NACELLE CAP AFT RH	1	
- 3	96-980001-17	SKIN,NACELLE TOP OUTBD LH	1	
- 4	96-980001-18	SKIN,NACELLE TOP OUTBD RH	1	
- 5	96-980001-11	SKIN,NACELLE TOP CENTER LH.	1	1
	96-980001-113	SKIN,NACELLE TOP CENTER LH.	1	2
- 6	96-980001-12	SKIN,NACELLE TOP CENTER RH.	1	1
	96-980001-114	SKIN,NACELLE TOP CENTER RH.	1	2
- 7	96-980001-25	SKIN,NACELLE TOP INBD LH.	1	
- 8	96-980001-26	SKIN,NACELLE TOP INBD RH.	1	
- 9	96-980001-9	SKIN,TROUGH NACELLE LOWER FWD CENTER LH	1	
- 10	96-980001-10	SKIN,TROUGH NACELLE LOWER FWD CENTER RH	1	
- 11	96-980001-13	DOOR,OUTBD LH NACELLE	1	
- 12	96-980001-14	DOOR,OUTBD RH NACELLE	1	
- 13	95-980001-185	DOOR,UPPER LH NACELLE	1	
	96-980002-15	DOOR,UPPER LH NACELLE/WITH SURFACE DEICE/ . . .	1	
- 14	95-980001-186	DOOR,UPPER RH NACELLE	1	
	96-980002-16	DOOR,UPPER RH NACELLE/WITH SURFACE DEICE/ . . .	1	
- 15	96-980001-14	DOOR,INBD LH NACELLE.	1	
- 16	96-980001-13	DOOR,INBD RH NACELLE.	1	

CODES OF EFFECTIVITY

1 TC-1 THRU TC-1607

2 TE-1 THRU TE-942
EXCEPT TE-938

"END"

54-50-01
NACELLE FAIRINGS AND FILLETS

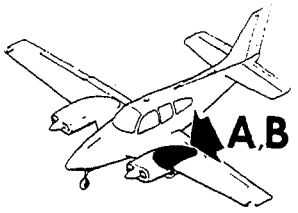

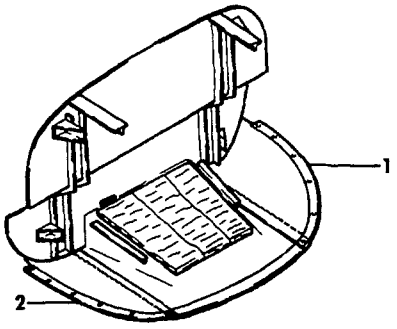

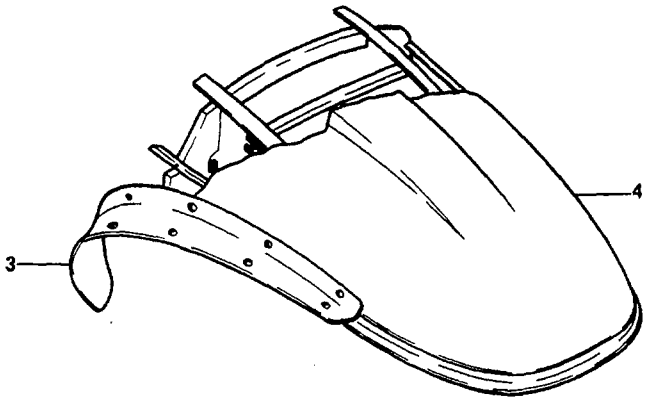

B55-38-13

FIGURE 50-01.NACELLE FAIRINGS & FILLETS

ATA CODE & INDEX NO.	PART NO.	DESCRIPTION 1 2 3 4 5 6 7	UNITS PER ASSY	USABLE ON CODE
50-01 - 1	96-980001-73	FAIRING,LH.	1	
	96-980001-74	FAIRING,RH.	1	
- 2	96-980001-71	FAIRING,LH.	1	
	96-980001-72	FAIRING,RH.	1	
		/ATTACHING PARTS/		
	AN525-10R8	SCREW	18	
	NAS680-A3	NUTPLATE/SUPERSEDES AN366F1032/	18	
		----*----		
- 3	96-110010-17	FILLET,OUTBD LH NACELLE	1	
	96-110010-19	FILLET,OUTBD RH NACELLE	1	
- 4	96-110010-21	FILLET,INBD LH NACELLE.	1	
	96-110010-23	FILLET,INBD RH NACELLE.	1	
		/ATTACHING PARTS/		
	AN509-10R	SCREW	18	
	AN525-10R	SCREW	12	
	A10K80	NUT/SUPERSEDES NAS1329A3K80/.	30	
		----*----		

"END"

CHAPTER

55

STABILIZERS

LIST OF PAGES & TABLE OF CONTENTS FOR CHAPTER 55-00-00 STABILIZERS

CHAP/SUB-SECT & UNIT	PAGE NO.	EFFECTIVE DATE	TABLE OF CONTENTS
55-00-00	1	04/05/85	LIST OF PAGES & TABLE OF CONTENTS
55-00-01	1	03/10/78	EMPENNAGE INSTALLATION. TC-1 THRU TC-1607
55-00-01	2	03/10/78	
55-00-01	3	04/05/85	
55-00-01	4	03/10/78	
55-00-01	5	04/05/85	
55-00-02	1	03/10/78	EMPENNAGE INSTALLATION. TE-1 THRU TE-942 EXCEPT TE-938
55-00-02	2	03/10/78	
55-00-02	3	04/05/85	
55-00-02	4	03/10/78	
55-00-02	5	04/05/85	
55-10-01	1	03/10/78	HORIZONTAL STABILIZER TC-1 THRU TC-1607
55-10-01	2	03/10/78	
55-10-01	3	04/05/85	
55-10-01	4	03/10/78	
55-10-01	5	04/05/85	
55-11-01	1	03/10/78	HORIZONTAL STABILIZER TE-1 THRU TE-942 EXCEPT TE-938
55-11-01	2	03/10/78	
55-11-01	3	04/05/85	
55-11-01	4	03/10/78	
55-11-01	5	04/05/85	
55-11-01	6	03/10/78	
55-11-01	7	04/05/85	
55-20-01	1	03/10/78	ELEVATOR AND TAB. TC-1 THRU TC-1607
55-20-01	2	03/10/78	
55-20-01	3	04/05/85	
55-20-01	4	03/10/78	
55-20-01	5	04/05/85	
55-20-01	6	03/10/78	
55-20-01	7	03/10/78	
55-21-01	1	03/10/78	ELEVATOR AND TAB. TE-1 THRU TE-942 EXCEPT TE-938
55-21-01	2	04/05/85	
55-21-01	3	04/05/85	
55-21-01	4	03/10/78	
55-21-01	5	04/05/85	
55-30-01	1	03/10/78	VERTICAL STABILIZER
55-30-01	2	03/10/78	
55-30-01	3	04/05/85	
55-30-01	4	03/10/78	
55-30-01	5	04/05/85	
55-40-01	1	03/10/78	RUDDER AND TAB ASSEMBLY
55-40-01	2	03/10/78	
55-40-01	3	04/05/85	
55-40-01	4	03/10/78	
55-40-01	5	03/10/78	
55-40-01	6	03/10/78	
55-40-01	7	04/05/85	

55-00-01
EMPENNAGE INSTALLATION
TC-1 THRU TC-1607

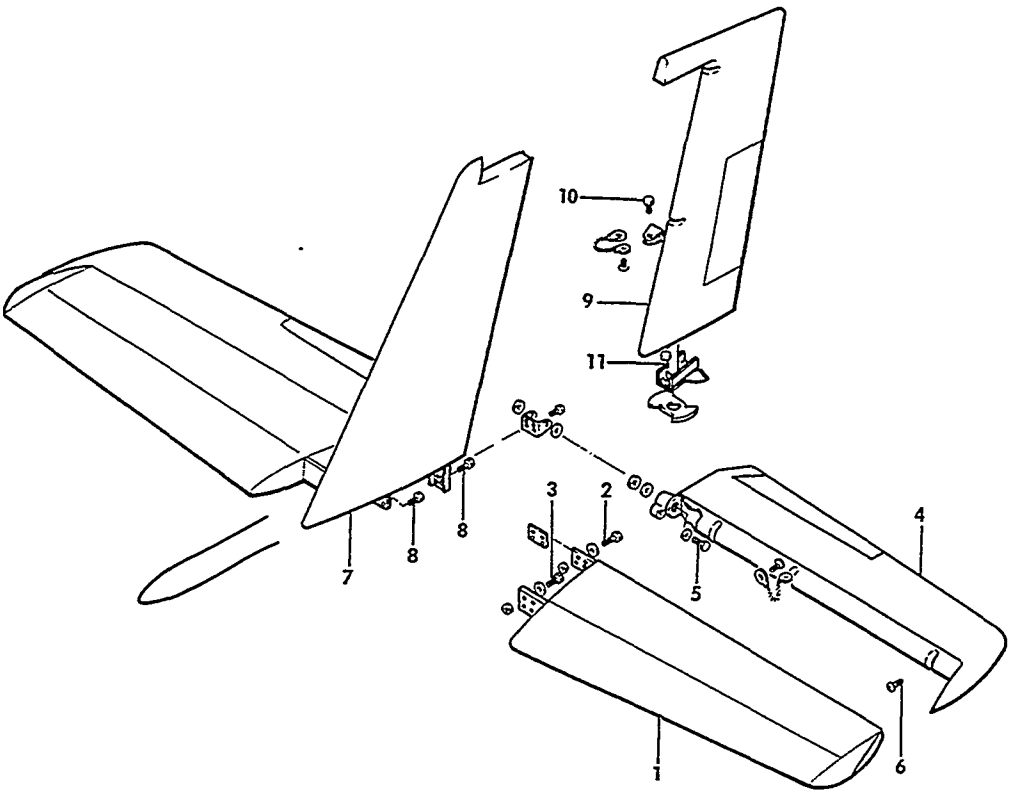

55-131-6

FIGURE 00-01.EMPENNAGE INSTALLATION
/SHEET 1 OF 2 SHEETS/

SUB-SECT UNIT & ITEM NO.	PART NO.	DESCRIPTION 1 2 3 4 5 6 7	UNITS PER ASSY	USABLE ON CODE
00-01	96-600000	EMPENNAGE INSTALLATION.	NP	2
	96-600000-5	EMPENNAGE INSTALLATION/WITH UTILITY BAGGAGE DR/	NP	3
	96-600000-7	EMPENNAGE INSTALLATION.	NP	4
- 1	95-620010-623	. STABILIZER ASSY,LH HORIZONTAL/SEE 55-10-01/ .	1	5
	95-620010-624	. STABILIZER ASSY,RH HORIZONTAL/SEE 55-10-01/ .	1	5
	95-620010-633	. STABILIZER ASSY,LH HORIZONTAL/SEE 55-10-01/ .	1	6
	95-620010-634	. STABILIZER ASSY,RH HORIZONTAL/SEE 55-10-01/ .	1	6
		/ATTACHING PARTS/		
- 2	R 130909B99	. BOLT/TC-1 AND TC-2 ONLY REQUIRE 4 BOLTS AFT/.	14	7
- 3	R MS20002C6	. WASHER/UNDER BOLT HD/	14	
	AN960-416	. WASHER,AFT.	6	
	R AN960-616	. WASHER,FWD/2 UNDER NUT/	8	
	R 130909N47	. NUT	14	
- 4	95-610006-601	. ELEVATOR ASSY,LH/SEE CHAPTER 55-20-01/. . . .	1	8
	95-610006-602	. ELEVATOR ASSY,RH/SEE CHAPTER 55-20-01/. . . .	1	8
	96-610005-601	. ELEVATOR ASSY,LH/SEE CHAPTER 55-20-01/. . . .	1	9
	96-610005-602	. ELEVATOR ASSY,RH/SEE CHAPTER 55-20-01/. . . .	1	9
	96-610005-605	. ELEVATOR ASSY,LH/SEE CHAPTER 55-20-01/. . . .	1	10
	96-610005-606	. ELEVATOR ASSY,RH/SEE CHAPTER 55-20-01/. . . .	1	10
	96-610005-615	. ELEVATOR ASSY,LH/SEE CHAPTER 55-20-01/. . . .	1	11
	96-610005-616	. ELEVATOR ASSY,RH/SEE CHAPTER 55-20-01/. . . .	1	11
	R 96-610005-651	. ELEVATOR ASSY,LH/SEE CHAPTER 55-20-01/. . . .	1	8
	R 96-610005-652	. ELEVATOR ASSY,RH/SEE CHAPTER 55-20-01/. . . .	1	8
	96-610005-651	. ELEVATOR ASSY,LH/SEE CHAPTER 55-20-01/. . . .	1	12
	96-610005-652	. ELEVATOR ASSY,RH/SEE CHAPTER 55-20-01/. . . .	1	12
	96-610005-655	. ELEVATOR ASSY,LH/SEE CHAPTER 55-20-01/. . . .	1	11
	96-610005-656	. ELEVATOR ASSY,RH/SEE CHAPTER 55-20-01/. . . .	1	11
		/ATTACHING PARTS/		
- 5	R 1309098191	. BOLT,ELEVATOR FITTING	1	
	R AN960-416	. WASHER/3 UNDER NUT/	3	
	AN960-416L	. WASHER.	2	
	R 130909N48	. NUT	1	
- 6	AN502-10-10/M/	. SCREW,ELEVATOR HINGE/SEE BEECHCRAFT	4	
		SERVICE INSTRUCTION 0636-133/		
		/ATTACHING PARTS/		
	AN960-10L	. WASHER.	4	
- 7	96-640000-606	. STABILIZER ASSY,VERTICAL/SEE 55-30-01/. . . .	1	13
	96-640000-601	. STABILIZER ASSY,VERTICAL/SEE 55-30-01/. . . .	1	14
		/ATTACHING PARTS/		
	MS20004-6/M/	. BOLT,FWD SPAR	8	15
- 8	R 130909B99	. BOLT,FWD SPAR	4	16
	MS20004-6/M/	. BOLT,AFT SPAR/TC-1 AND TC-2 ONLY/	5	
	MS20006-6/M/	. BOLT,AFT SPAR	2	17
	NAS143-4C	. WASHER/TC-1 AND TC-2 USE 5 AFT/	8	15
	R MS20002C6	. WASHER/UNDER BOLT HEAD/	6	17
	R AN960-416	. WASHER.	13	15
	R AN960-616	. WASHER/2 UNDER NUT/	6	17
	AN365-428	. NUT	13	15
	R 130909N47	. NUT	6	17
- 9	96-630000-601	. RUDDER ASSY/SEE CHAPTER 55-40-01/	1	18
	96-630000-606	. RUDDER ASSY/SEE CHAPTER 55-40-01/	1	19
	96-630000-607	. RUDDER ASSY/SEE CHAPTER 55-40-01/	1	20
		/ATTACHING PARTS/		
- 10	AN4-10A/M/	. BOLT.	2	
- 11	AN26-31/M/	. BOLT.	1	
	AN960-416	. WASHER.	2	
	AN960-616	. WASHER.	1	
	MS20365-428	. NUT	2	
	AN365-624	. NUT	1	

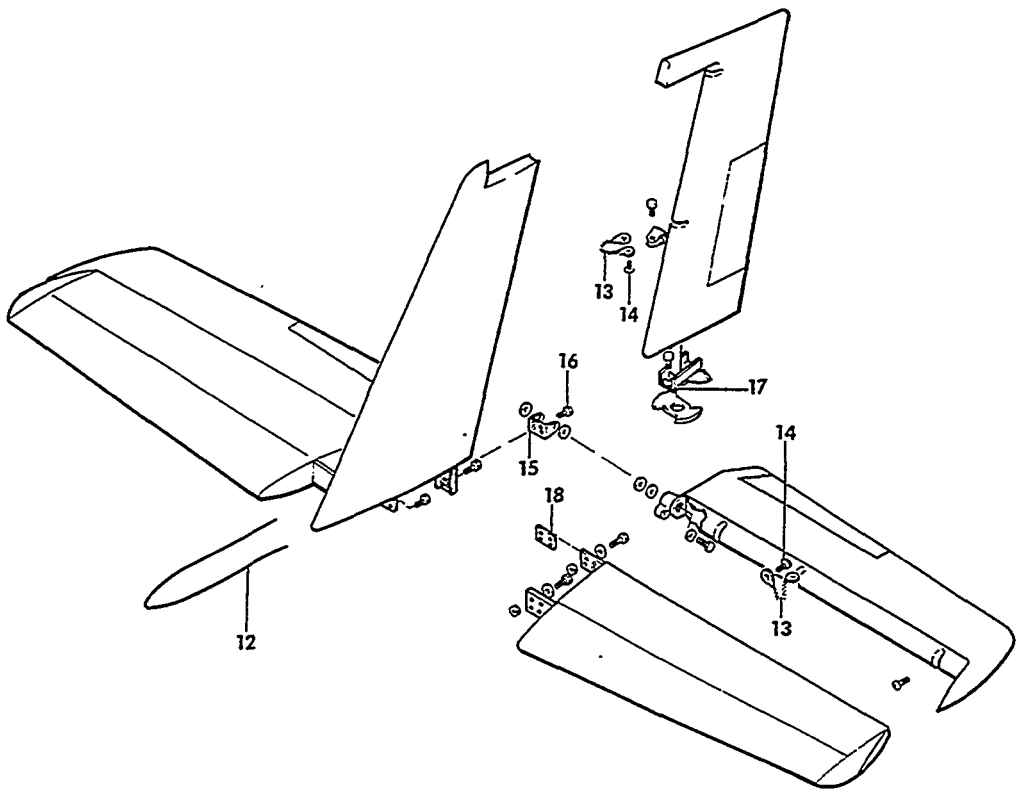

55-131-10

FIGURE 00-01.EMPENNAGE INSTALLATION
/SHEET 2 OF 2 SHEETS/

SUB-SECT UNIT & ITEM NO.	PART NO.	DESCRIPTION 1 2 3 4 5 6 7	UNITS PER ASSY	USABLE ON CODE
00-01 - 12	95-600001-3	. SEAL,LH	1	1
	95-600001-4	. SEAL,RH	1	1
- 13	MS25083-2AA4	. JUMPER,BONDING.	6	1
		/ATTACHING PARTS/		
- 14	AN515-6R8	. SCREW	2	
	105090-032-1D	. WASHER.	2	
		----*----		
- 15	95-610012-15	. HINGE ASSY/ALTERNATE FOR 95-610012-21/. . . .	1	1
	R 95-610012-21	. HINGE ASSY/ALTERNATE FOR 95-610012-15/. . . .	1	1
		/ATTACHING PARTS/		
- 16	R 130909B97	. BOLT.	4	
	NAS143-4C	. WASHER.	4	
	R AN960-416	. WASHER/2 UNDER NUT/	8	
	R 130909N30	. NUT	4	
		----*----		
	95-610012-13	. . HINGE	1	1
	MS27261KSP4	. . BEARING	2	1
- 17	96-600000-3	. SHIM,RUDDER BELLCRANK	1	1
	96-524013	. BELLCRANK ASSY.	1	1
- 18	96-600000-1	. SHIM,HORIZONTAL STABILIZER.	1	21
		/ATTACHING PARTS/		
	AN525-10-12	. SCREW	4	
		----*----		

CODES OF EFFECTIVITY

1	TC-1 THRU TC-1607	2	TC-1 THRU TC-546
3	TC-393 THRU TC-1607	4	TC-547 THRU TC-1607
5	TC-1 THRU TC-1143	6	TC-1144 THRU TC-1607
7	TC-3 THRU TC-1607	8	TC-1 THRU TC-546
9	TC-547 THRU TC-1046	10	TC-1047 THRU TC-1143
11	TC-1144 THRU TC-1607	12	TC-547 THRU TC-1143
13	TC-241 THRU TC-1607	14	TC-1 THRU TC-240
15	TC-1 THRU TC-120	16	TC-121 THRU TC-1607
17	TC-3 THRU TC-1607	18	TC-1 THRU TC-1288
19	TC-1289 THRU TC-1601	20	TC-1602 THRU TC-1607
21	TC-1 THRU TC-191		

55-00-02
EMPENNAGE INSTALLATION
TE-1 THRU TE-942 EXCEPT TE-938

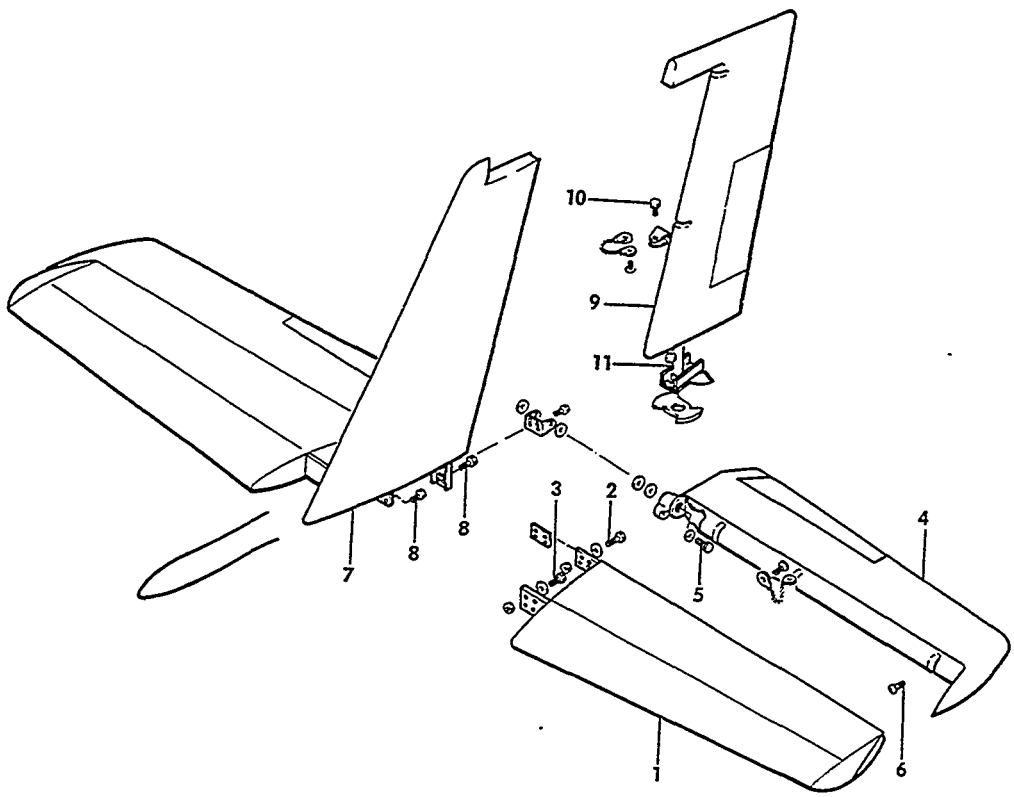

55-131-6

FIGURE 00-02.EMPENNAGE INSTALLATION
/SHEET 1 OF 2 SHEETS/

SUB-SECT UNIT & ITEM NO.	PART NO.	DESCRIPTION 1 2 3 4 5 6 7	UNITS PER ASSY	USABLE ON CODE
00-02	96-600001-1	EMPENNAGE INSTALLATION.	NP	1
- 1	96-620005-653	. STABILIZER ASSY,LH HORIZONTAL/SEE 55-11-01/ .	1	2
	96-620005-654	. STABILIZER ASSY,RH HORIZONTAL/SEE 55-11-01/ .	1	2
	96-620005-655	. STABILIZER ASSY,LH HORIZONTAL/SEE 55-11-01/ .	1	3
	96-620005-656	. STABILIZER ASSY,RH HORIZONTAL/SEE 55-11-01/ .	1	3
	96-620005-623	. STABILIZER ASSY,LH HORIZONTAL/SEE 55-11-01/ .	1	4
	96-620005-624	. STABILIZER ASSY,RH HORIZONTAL/SEE 55-11-01/ .	1	4
		/ATTACHING PARTS/		
- 2	MS20004-6/M/	. BOLT,AFT SPAR	6	
- 3	R 130909B99	. BOLT,FWD SPAR	8	
	AN960-416L	. WASHER.	6	
	R MS20002C6	. WASHER/UNDER BOLT HEAD/	8	
	MS20002C4	. WASHER.	6	
	R AN960-616	. WASHER/UNDER NUT/	8	
	MS20365-428	. NUT	6	
	R 130909N47	. NUT	8	
		——*——		
- 4	96-610006-601	. ELEVATOR ASSY,LH/SEE CHAPTER 55-21-01/. . . .	1	5
	96-610006-602	. ELEVATOR ASSY,RH/SEE CHAPTER 55-21-01/. . . .	1	5
	96-610006-651	. ELEVATOR ASSY,LH/SEE CHAPTER 55-21-01/. . . .	1	5
	96-610006-652	. ELEVATOR ASSY,RH/SEE CHAPTER 55-21-01/. . . .	1	5
	96-610006-609	. ELEVATOR ASSY,LH/SEE CHAPTER 55-21-01/. . . .	1	6
	96-610006-610	. ELEVATOR ASSY,RH/SEE CHAPTER 55-21-01/. . . .	1	6
	96-610006-655	. ELEVATOR ASSY,LH/SEE CHAPTER 55-21-01/. . . .	1	7
	96-610006-656	. ELEVATOR ASSY,RH/SEE CHAPTER 55-21-01/. . . .	1	7
	96-610006-613	. ELEVATOR ASSY,LH/SEE CHAPTER 55-21-01/. . . .	1	8
	96-610006-614	. ELEVATOR ASSY,RH/SEE CHAPTER 55-21-01/. . . .	1	8
	96-610006-615	. ELEVATOR ASSY,LH/SEE CHAPTER 55-21-01/. . . .	1	9
	96-610006-616	. ELEVATOR ASSY,RH/SEE CHAPTER 55-21-01/. . . .	1	9
		/ATTACHING PARTS/		
- 5	R 130909B191	. BOLT,ELEVATOR FITTING	1	
	R AN960-416	. WASHER/3 UNDER NUT/	3	
	AN960-416L	. WASHER.	1	
	R 130909N48	. NUT	1	
- 6	AN502-10-10/M/	. SCREW,ELEVATOR HINGE/SEE BEECHCRAFT	4	
		——*——		
		SERVICE INSTRUCTION 0636-133/		
		/ATTACHING PARTS/		
	AN960-10L	. WASHER.	4	
		——*——		
- 7	96-640000-606	. STABILIZER ASSY,VERTICAL/SEE 55-30-01/. . . .	1	1
		/ATTACHING PARTS/		
- 8	R 130909B99	. BOLT/USE 2 AFT AND 4 FWD SPARS/	6	
	R MS20002C6	. WASHER/UNDER BOLT HEAD/	6	
	R AN960-616	. WASHER/2 UNDER NUT/	8	
	AN960-616L	. WASHER.	2	
	R 130909N47	. NUT	6	
		——*——		
- 9	96-630000-608	. RUDDER ASSY/SEE CHAPTER 55-40-01/	1	10
	96-630000-606	. RUDDER ASSY/SEE CHAPTER 55-40-01/	1	11
	96-630000-610	. RUDDER ASSY/SEE CHAPTER 55-40-01/	1	12
	96-630000-609	. RUDDER ASSY/SEE CHAPTER 55-40-01/	1	13
		/ATTACHING PARTS/		
- 10	AN4-10A/M/	. BOLT,HINGE.	2	
- 11	AN26-31/M/	. BOLT,BELLCRANK.	1	
	AN960-416	. WASHER.	2	
	AN960-616	. WASHER.	1	
	MS20365-428	. NUT	2	
	AN365-624	. NUT	1	
		——*——		

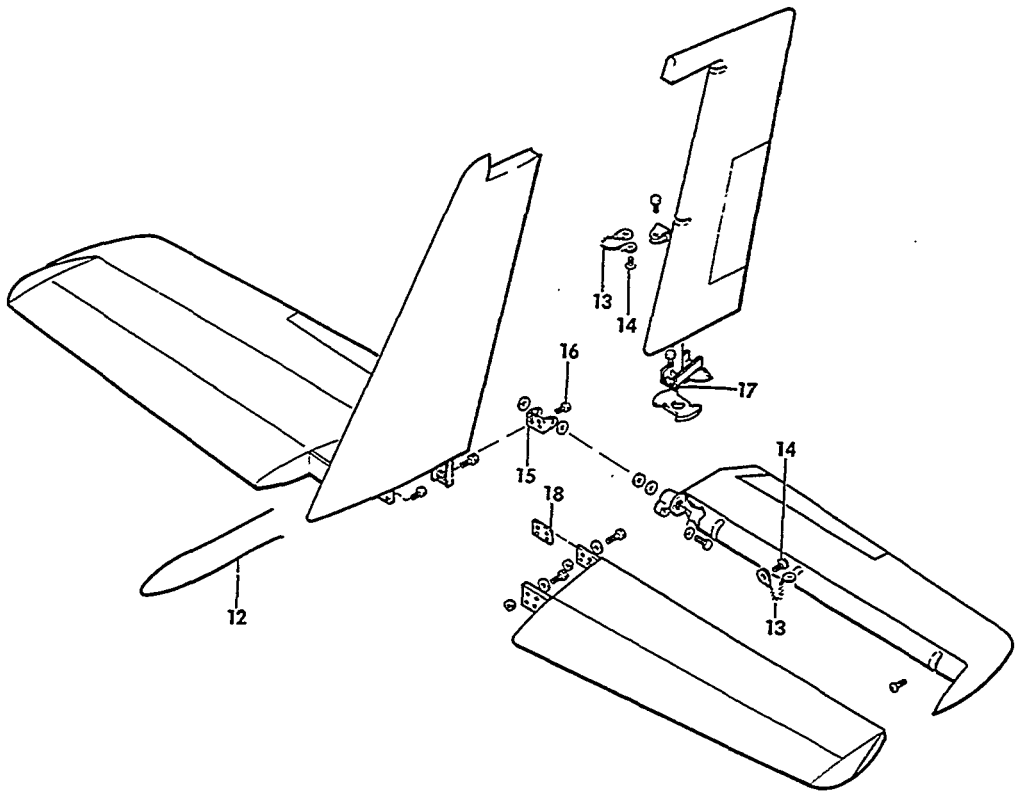

55-131-9

FIGURE 00-02.EMPENNAGE INSTALLATION
/SHEET 2 OF 2 SHEETS/

SUB-SECT UNIT & ITEM NO.	PART NO.	DESCRIPTION 1 2 3 4 5 6 7	UNITS PER ASSY	USABLE ON CODE
00-02 - 12	95-600001-3	SEAL,LH	1	1
	95-600001-4	SEAL,RH	1	1
- 13	MS25083-2AA4	JUMPER,BONDING.	6	1
		/ATTACHING PARTS/		
- 14	AN515-6R8	SCREW	2	
	105090-032-1D	WASHER.	2	
- 15	95-610012-15	HINGE ASSY,ELEVATOR/SPARE FOR 95-610012-21.	1	1
	R 95-610012-21	HINGE ASSY,ELEVATOR/SPARE FOR 95-610012-15.	1	1
		/ATTACHING PARTS/		
- 16	R 130909B97	BOLT.	4	
	R MS20002C4	WASHER/UNDER BOLT HEAD/	4	
	R AN960-416	WASHER/2 UNDER NUT/	8	
	R 130909N30	NUT	4	
	95-610012-13	HINGE	1	1
	MS27261KSP4	BEARING	2	1
- 17	96-600000-3	SHIM,RUDDER BELLCRANK	1	1
	96-524013	BELLCRANK ASSY.	1	1
- 18	96-600000-1	SHIM,HORIZONTAL STABILIZER.	1	
		/ATTACHING PARTS/		
	AN525-10-12	SCREW	4	

CODES OF EFFECTIVITY

1	TE-1 THRU TE-942 EXCEPT TE-938	2	TE-1 THRU TE-265
3	TE-266 THRU TE-617	4	TE-618 THRU TE-942 EXCEPT TE-938
5	TE-1 THRU TE-476	6	TE-477 THRU TE-617
7	TE-618 THRU TE-757	8	TE-758 THRU TE-837
9	TE-838 THRU TE-942 EXCEPT TE-938	10	TE-1 THRU TE-767
11	TE-241 THRU TE-942 EXCEPT TE-938	12	TE-768 THRU TE-939 EXCEPT TE-938
13	TE-940 THRU TE-942		

"END"

55-10-01
HORIZONTAL STABILIZER
TC-1 THRU TC-1607

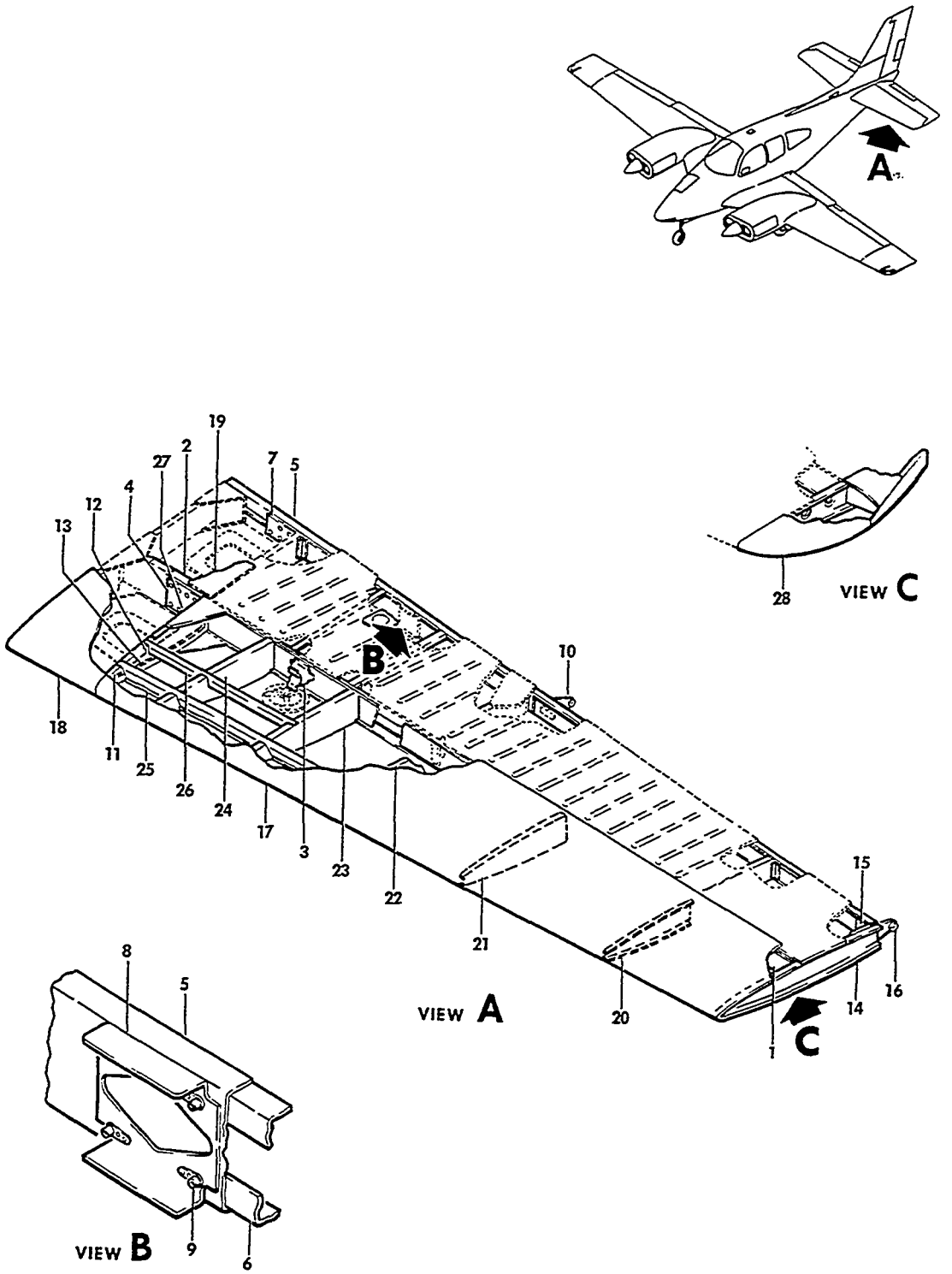

FIGURE 10-01.HORIZONTAL STABILIZER
/SHEET 1 OF 2 SHEETS/

SUB-SECT UNIT & ITEM NO.	PART NO.	DESCRIPTION 1 2 3 4 5 6 7	UNITS PER ASSY	USABLE ON CODE
10-01	95-620010-623	STABILIZER ASSEMBLY,HORIZONTAL LH	1	2
	95-620010-633	STABILIZER ASSEMBLY,HORIZONTAL LH	1	3
	95-620010-624	STABILIZER ASSEMBLY,HORIZONTAL RH	1	2
	95-620010-634	STABILIZER ASSEMBLY,HORIZONTAL RH	1	3
	95-620010-604	. SPAR ASSEMBLY,FWD	1	1
- 1	95-620010-39	. . SPAR.	1	1
- 2	95-620010-41	. . DOUBLER	1	1
	45-620025-11	. . BRACKET ASSY.	1	1
- 3	45-620025-13	. . . BRACKET	1	1
	45-620025-7	. . . BLOCK	1	1
- 4	45-620011-12	. . BUSHING	8	1
	95-620010-606	. SPAR ASSEMBLY,AFT	1	2
	95-620010-632	. SPAR ASSEMBLY,AFT	1	3
- 5	95-620010-43	. . SPAR.	1	2
	95-620010-101	. . SPAR.	1	4
	95-620010-105	. . SPAR.	1	5
- 6	95-620010-45	. . DOUBLER	1	2
	95-620010-103	. . DOUBLER	1	4
	95-620010-107	. . DOUBLER	1	5
- 7	45-620011-4	. . BUSHING	6	1
- 8	45-620010-30	. . DOUBLER	1	2
	95-620010-109	. . DOUBLER	1	8
	95-620010-113	. . DOUBLER	1	9
- 9	NAS697A3	. . NUTPLATE.	2	2
	NAS696A3	. . NUTPLATE.	4	3
- 10	R 95-620010-62	. HINGE ASSEMBLY,ELEVATOR CENTER.	1	12
	R 96-610023-601	. HINGE ASSEMBLY,ELEVATOR CENTER.	1	13
	R 35-600003	. . BUSHING	1	
	95-620010-627	. RIB ASSEMBLY,INBD LH.	1	1
	95-620010-608	. RIB ASSEMBLY,INBD RH.	1	1
- 11	95-620010-5	. . RIB	1	1
- 12	35-650005-45	. . ANGLE,TOP	1	1
- 13	35-650005-46	. . ANGLE BOTTOM.	1	1
	95-620010-607	. RIB ASSEMBLY,OUTBD.	1	1
- 14	95-620010-53	. . RIB	1	1
- 15	95-620010-33	. . EXTENSION	1	1
- 16	35-650121-4	. . HINGE ASSEMBLY,ELEVATOR OUTBD	1	1
	95-620010-630	. SKIN ASSEMBLY,LH.	1	1
	95-620010-631	. SKIN ASSEMBLY,RH.	1	1
- 17	95-620010-69	. . SKIN,STABILIZER OUTBD LEADING EDGE LH	1	1
	95-620010-70	. . SKIN,STABILIZER OUTBD LEADING EDGE RH	1	1
- 18	95-620010-79	. . SKIN,STABILIZER INBD LEADING EDGE LH.	1	10
	95-620010-117	. . SKIN,STABILIZER INBD LEADING EDGE LH.	1	11
	95-620010-80	. . SKIN,STABILIZER INBD LEADING EDGE RH.	1	10
	95-620010-118	. . SKIN,STABILIZER INBD LEADING EDGE RH.	1	11
	95-620010-135	. . DOUBLER ASSY.	1	11
- 19	95-620010-81	. . SKIN,STABILIZER INBD TOP.	1	1
	95-620010-82	. . SKIN,STABILIZER INBD TOP.	1	1
- 20	95-620010-15	. . RIB,STABILIZER LEADING EDGE	1	1
- 21	95-620010-13	. . RIB,STABILIZER LEADING EDGE	1	1
- 22	95-620010-11	. . RIB,STABILIZER LEADING EDGE	1	1
- 23	95-620010-9	. . RIB,STABILIZER LEADING EDGE	1	1
- 24	95-620010-7	. . RIB,STABILIZER LEADING EDGE	1	1
- 25	35-650005-7	. . STIFFENER,LEADING EDGE LH	2	1
	35-650005-8	. . STIFFENER,LEADING EDGE RH	2	1
- 26	95-620010-95	. . STIFFENER,LEADING EDGE LH	1	1
	95-620010-96	. . STIFFENER,LEADING EDGE RH	1	1
- 27	95-620010-29	. . DOUBLER,UPPER	1	1
	95-620010-30	. . DOUBLER,LOWER	1	1
- 28	95-620010-19	. . TIP,STABILIZER.	1	1

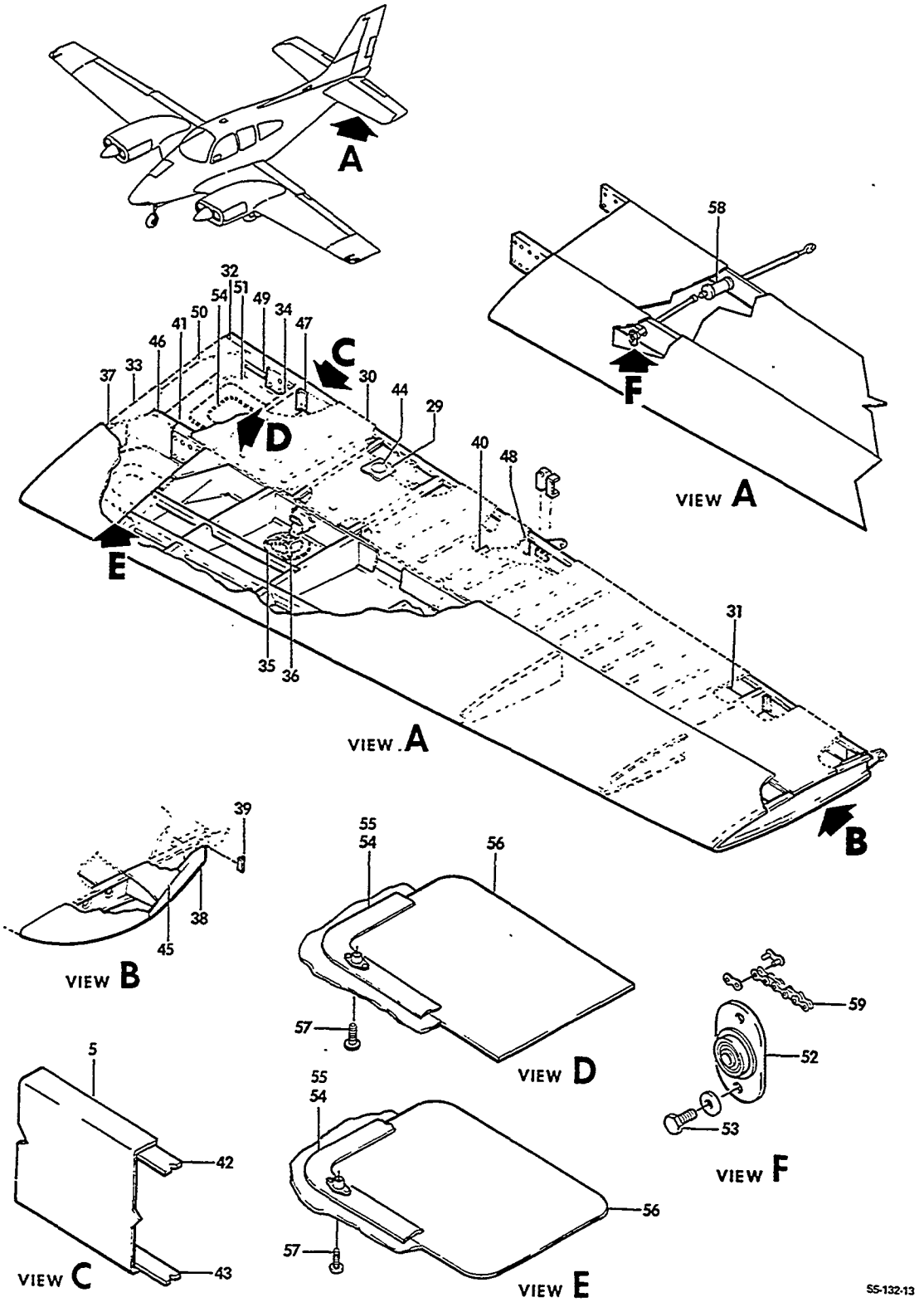

FIGURE 10-01.HORIZONTAL STABILIZER
/SHEET 2 OF 2 SHEETS/

SUB-SECT UNIT & ITEM NO.	PART NO.	DESCRIPTION 1 2 3 4 5 6 7	UNITS PER ASSY	USABLE ON CODE
10-01 - 29	45-620010-20	. DOUBLER,PATCH PLATE	1	6
	96-620005-85	. DOUBLER,ACTUATOR ACCESS DOOR.	1	4
	96-620005-83	. DOOR,ACCESS	1	7
- 30	95-620010-65	. SKIN,TOP AFT LH	1	6
	95-620010-97	. SKIN,TOP AFT LH	1	7
	95-620010-66	. SKIN TOP AFT RH	1	6
	95-620010-98	. SKIN,TOP AFT RH	1	7
- 31	95-620010-67	. SKIN,BOTTOM AFT LH.	1	1
	95-620010-68	. SKIN,BOTTOM AFT RH.	1	1
- 32	95-620010-75	. CHANNEL,AFT INBD.	1	1
- 33	95-620010-77	. GUSSET,INBD	2	1
- 34	95-620010-89	. RIB,INBD AFT.	1	1
- 35	45-620020	. COVER,STABILIZER ACCESS HOLE.	1	1
- 36	45-620021	. CLAMP ASSY.	1	1
- 37	95-620010-71	. RIB,INBD FWD.	1	1
- 38	95-620010-35	. RIB,OUTBD AFT	1	1
- 39	95-620010-31	. CLIP.	1	1
- 40	35-650005-31	. RIB,MID AFT	1	1
- 41	95-620010-93	. SHIM,SPAR	2	1
- 42	45-620010-34	. REINFORCEMENT,SPAR UPPER.	1	1
- 43	45-620010-35	. REINFORCEMENT,SPAR LOWER.	1	1
- 44	A6914-1024-1	. PLATE,PATCH	1	6
- 45	95-620010-21	. SKIN,TIP UPPER.	1	1
	95-620010-22	. SKIN,TIP LOWER.	1	1
- 46	95-620010-85	. CHANNEL,FRONT SPAR.	1	1
- 47	95-620010-87	. ANGLE	1	1
- 48	95-620010-55	. CLIP,AFT MID RIB.	1	1
- 49	95-620010-91	. ANGLE,REAR SPAR LH.	1	1
	95-620010-92	. ANGLE,REAR SPAR RH.	1	1
- 50	95-620010-73	. RIB,INBD AFT.	1	1
- 51	95-620010-83	. SKIN,AFT INBD LOWER LH.	1	1
	95-620010-84	. SKIN,AFT INBD LOWER RH.	1	1
	R 45-526008	. BRACKET,ELEVATOR TRIM TAB ACTUATOR SUPPORT.	1	1
- 52	45-526006-5	. PLATE ASSY,SPROCKET SUPPORT	1	1
	KP3A	. . BEARING	1	1
- 53	AN3-3A/M/	. BOLT.	2	1
	AN960-10L	. WASHER.	2	1
- 54	95-110014-383	. DOUBLER ASSY,ACCESS DOOR LH	2	1
- 55	95-110014-384	. DOUBLER ASSY,ACCESS DOOR RH	2	1
- 56	95-110014-253	. DOOR,STABILIZER ACCESS.	2	1
- 57	MS24693S50	. SCREW/USE 8 FWD AND 9 AFT DOOR/	17	1
- 58	R 95-620010-609	. ACTUATOR ASSY,LH ELEVATOR TRIM TAB/SEE. CHAPTER 27-30-11/	1	2
	R 96-526013-611	. ACTUATOR ASSY,LH ELEVATOR TRIM TAB/SEE. CHAPTER 27-30-11/	1	4
	R 96-526013-613	. ACTUATOR ASSY,LH ELEVATOR TRIM TAB/SEE. CHAPTER 27-30-11/	1	5
	R 95-620010-610	. ACTUATOR ASSY,RH ELEVATOR TRIM TAB/SEE. CHAPTER 27-30-11/	1	2
	R 96-526013-612	. ACTUATOR ASSY,RH ELEVATOR TRIM TAB/SEE. CHAPTER 27-30-11/	1	4
	R 96-526013-614	. ACTUATOR ASSY,RH ELEVATOR TRIM TAB/SEE. CHAPTER 27-30-11/	1	5
- 59	R 96-524000-9	. CHAIN & CABLE ASSY,LH ELEVATOR TRIM TAB	1	1
	R 96-524000-7	. CHAIN & CABLE ASSY,RH ELEVATOR TRIM TAB	1	1
	103637	. PLATE,IDENTIFICATION.	1	1
	49384	. FASTENER,PLATE.	2	1

CODES OF EFFECTIVITY

1	TC-1 THRU TC-1607	2	TC-1 THRU TC-1143
3	TC-1144 THRU TC-1607	4	TC-1144 THRU TC-1226
5	TC-1227 THRU TC-1607	6	TC-1 THRU TC-1143 TC-1284 THRU TC-1607
7	TC-1144 THRU TC-1283	8	TC-1227 THRU TC-1283
9	TC-1284 THRU TC-1607	10	TC-1 THRU TC-1546
11	TC-1547 THRU TC-1607	12	TC-1 THRU TC-1037
13	TC-1038 THRU TC-1607		

55-11-01
HORIZONTAL STABILIZER
TE-1 THRU TE-942 EXCEPT TE-938

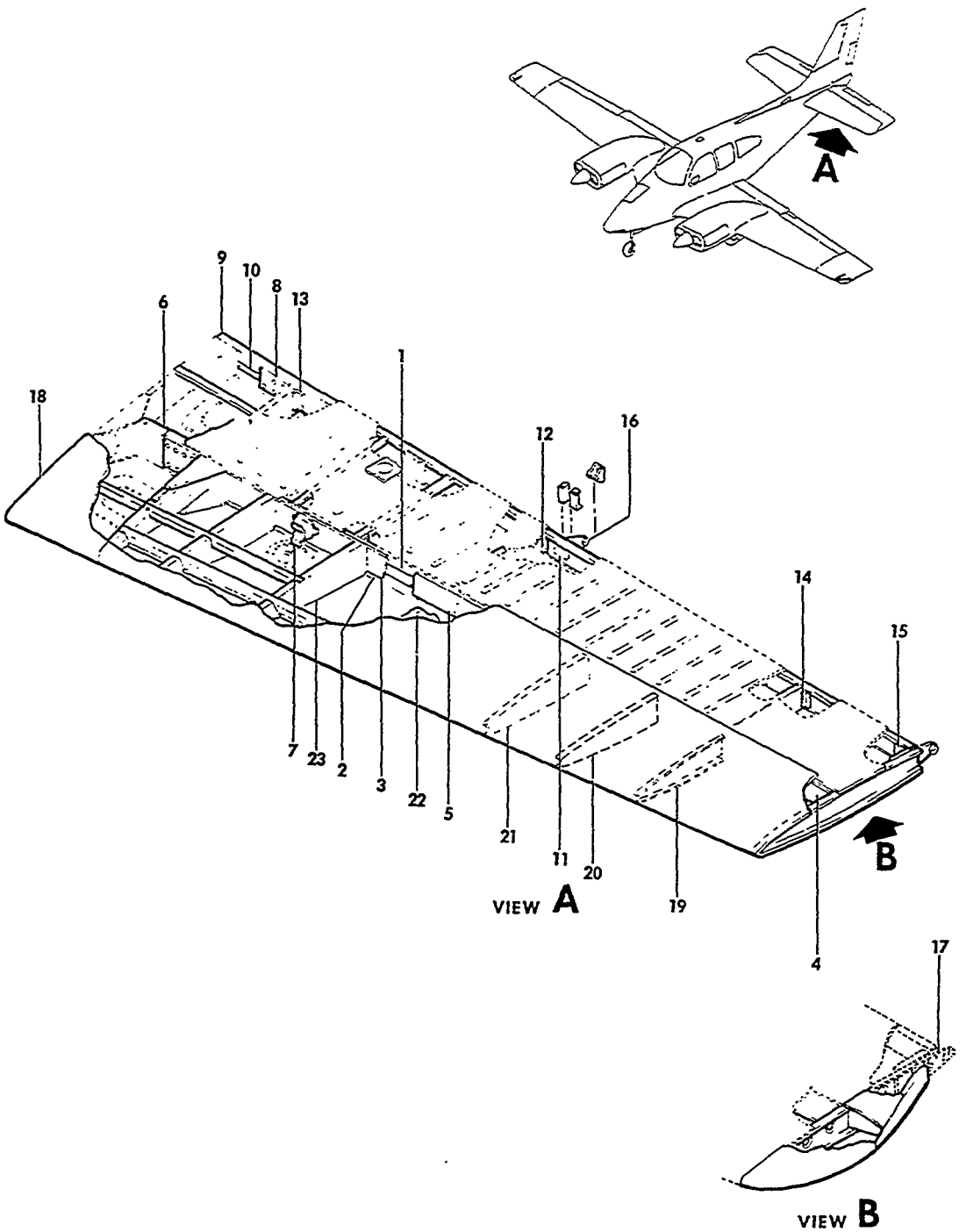

FIGURE 11-01.HORIZONTAL STABILIZER
/SHEET 1 OF 3 SHEETS/

SUB-SECT UNIT & ITEM NO.	PART NO.	DESCRIPTION 1 2 3 4 5 6 7	UNITS PER ASSY	USABLE ON CODE
10-01	95-620010-623	STABILIZER ASSEMBLY,HORIZONTAL LH	1	2
	95-620010-633	STABILIZER ASSEMBLY,HORIZONTAL LH	1	3
	95-620010-624	STABILIZER ASSEMBLY,HORIZONTAL RH	1	2
	95-620010-634	STABILIZER ASSEMBLY,HORIZONTAL RH	1	3
	95-620010-604	. SPAR ASSEMBLY,FWD	1	1
- 1	95-620010-39	. . SPAR.	1	1
- 2	95-620010-41	. . DOUBLER	1	1
	45-620025-11	. . BRACKET ASSY.	1	1
- 3	45-620025-13	. . . BRACKET	1	1
	45-620025-7	. . . BLOCK	1	1
- 4	45-620011-12	. . BUSHING	8	1
	95-620010-606	. SPAR ASSEMBLY,AFT	1	2
	95-620010-632	. SPAR ASSEMBLY,AFT	1	3
- 5	95-620010-43	. . SPAR.	1	2
	95-620010-101	. . SPAR.	1	4
	95-620010-105	. . SPAR.	1	5
- 6	95-620010-45	. . DOUBLER	1	2
	95-620010-103	. . DOUBLER	1	4
	95-620010-107	. . DOUBLER	1	5
- 7	45-620011-4	. . BUSHING	6	1
- 8	45-620010-30	. . DOUBLER	1	2
	95-620010-109	. . DOUBLER	1	8
	95-620010-113	. . DOUBLER	1	9
- 9	NAS697A3	. . NUTPLATE.	2	2
	NAS696A3	. . NUTPLATE.	4	3
- 10	R 95-620010-62	. HINGE ASSEMBLY,ELEVATOR CENTER.	1	12
	R 96-610023-601	. HINGE ASSEMBLY,ELEVATOR CENTER.	1	13
	R 35-600003	. . BUSHING	1	
	95-620010-627	. RIB ASSEMBLY,INBD LH.	1	1
	95-620010-608	. RIB ASSEMBLY,INBD RH.	1	1
- 11	95-620010-5	. . RIB	1	1
- 12	35-650005-45	. . ANGLE,TOP	1	1
- 13	35-650005-46	. . ANGLE BOTTOM.	1	1
	95-620010-607	. RIB ASSEMBLY,OUTBD.	1	1
- 14	95-620010-53	. . RIB	1	1
- 15	95-620010-33	. . EXTENSION	1	1
- 16	35-650121-4	. . HINGE ASSEMBLY,ELEVATOR OUTBD	1	1
	95-620010-630	. SKIN ASSEMBLY,LH.	1	1
	95-620010-631	. SKIN ASSEMBLY,RH.	1	1
- 17	95-620010-69	. . SKIN,STABILIZER OUTBD LEADING EDGE LH	1	1
	95-620010-70	. . SKIN,STABILIZER OUTBD LEADING EDGE RH	1	1
- 18	95-620010-79	. . SKIN,STABILIZER INBD LEADING EDGE LH.	1	10
	95-620010-117	. . SKIN,STABILIZER INBD LEADING EDGE LH.	1	11
	95-620010-80	. . SKIN,STABILIZER INBD LEADING EDGE RH.	1	10
	95-620010-118	. . SKIN,STABILIZER INBD LEADING EDGE RH.	1	11
	95-620010-135	. . DOUBLER ASSY.	1	11
- 19	95-620010-81	. . SKIN,STABILIZER INBD TOP.	1	1
	95-620010-82	. . SKIN,STABILIZER INBD TOP.	1	1
- 20	95-620010-15	. . RIB,STABILIZER LEADING EDGE	1	1
- 21	95-620010-13	. . RIB,STABILIZER LEADING EDGE	1	1
- 22	95-620010-11	. . RIB,STABILIZER LEADING EDGE	1	1
- 23	95-620010-9	. . RIB,STABILIZER LEADING EDGE	1	1
- 24	95-620010-7	. . RIB,STABILIZER LEADING EDGE	1	1
- 25	35-650005-7	. . STIFFENER,LEADING EDGE LH	2	1
	35-650005-8	. . STIFFENER,LEADING EDGE RH	2	1
- 26	95-620010-95	. . STIFFENER,LEADING EDGE LH	1	1
	95-620010-96	. . STIFFENER,LEADING EDGE RH	1	1
- 27	95-620010-29	. . DOUBLER,UPPER	1	1
	95-620010-30	. . DOUBLER,LOWER	1	1
- 28	95-620010-19	. . TIP,STABILIZER.	1	1

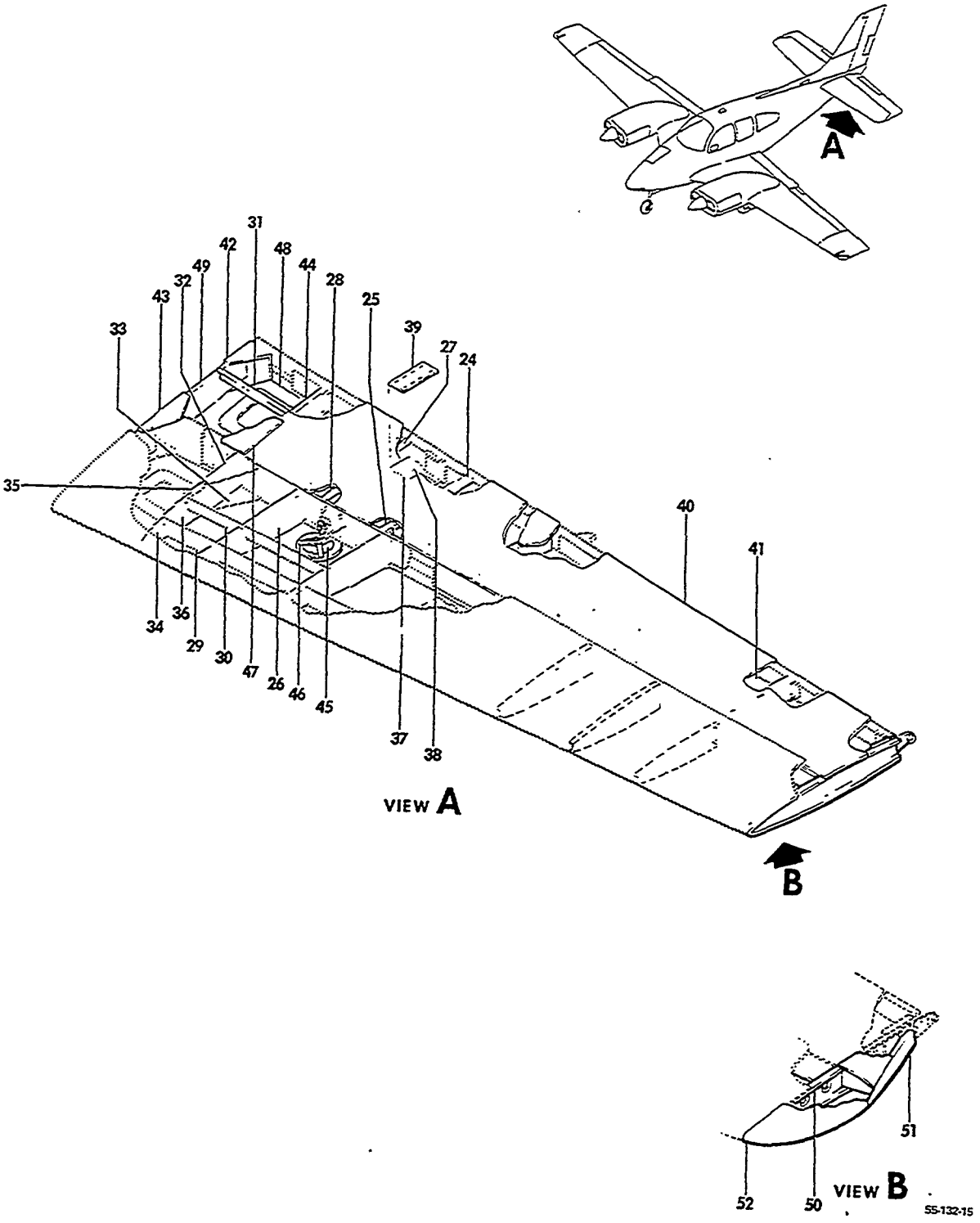

FIGURE 11-01.HORIZONTAL STABILIZER
/SHEET 2 OF 3 SHEETS/

SUB-SECT UNIT & ITEM NO.	PART NO.	DESCRIPTION 1 2 3 4 5 6 7	UNITS PER ASSY	USABLE ON CODE
11-01 - 24	96-620005-89	. . STIFFENER	1	14
- 25	96-620005-93	. . ANGLE,FWD LH.	1	12
	96-620005-94	. . ANGLE,FWD RH.	1	12
	108424-4	. . CLIP,AFT.	2	12
- 26	95-620010-7	. . RIB,STABILIZER LEADING EDGE	1	1
- 27	96-620005-87	. . STIFFENER	1	12
- 28	96-620005-91	. . ANGLE,FWD LH.	1	12
	96-620005-92	. . ANGLE,FWD RH.	1	12
- 29	35-650005-7	. . STIFFENER,LEADING EDGE LH	1	1
	35-650005-8	. . STIFFENER,LEADING EDGE RH	1	1
	95-620010-95	. . STIFFENER,LEADING EDGE LH	1	1
	95-620010-96	. . STIFFENER,LEADING EDGE RH	1	1
- 30	96-620005-65	. . STIFFENER,LEADING EDGE LH	1	1
	96-620005-66	. . STIFFENER,LEADING EDGE RH	1	1
- 31	96-620005-67	. . STIFFENER,LH.	1	1
	96-620005-68	. . STIFFENER,RH.	1	1
- 32	96-620005-41	. . GUSSET,UPPER.	1	1
- 33	96-620005-42	. . GUSSET,LOWER.	1	1
- 34	95-620010-5	. . RIB,STABILIZER LEADING EDGE	1	1
- 35	96-620005-46	. . SHIM,RIB.	2	1
- 36	35-650005-45	. . ANGLE,TOP	1	1
	35-650005-46	. . ANGLE,BOTTOM.	1	1
- 37	45-620010-20	. DOUBLER,PATCH PLATE	1	7
- 38	A6914-1024-1	. PLATE,PATCH	1	7
	R 96-620005-85	. DOUBLER,ELEVATOR TRIM TAB ACTUATOR DOOR	1	8
- 39	96-620005-83	. DOOR,ELEVATOR TRIM TAB ACTUATOR ACCESS.	1	8
		/ATTACHING PARTS/		
	AN525-8R6	. SCREW	9	
		----+----		
- 40	95-620010-65	. SKIN,TOP AFT LH	1	6
	96-620005-119	. SKIN,TOP AFT LH	1	8
	96-620005-129	. SKIN,TOP AFT LH	1	9
	95-620010-66	. SKIN,TOP AFT RH	1	6
	96-620005-120	. SKIN,TOP AFT RH	1	8
	96-620005-130	. SKIN,TOP AFT RH	1	9
- 41	95-620010-67	. SKIN,BOTTOM AFT LH.	1	6
	96-620005-107	. SKIN,BOTTOM AFT LH.	1	5
	95-620010-68	. SKIN,BOTTOM AFT RH.	1	6
	96-620005-108	. SKIN,BOTTOM AFT RH.	1	5
- 42	95-620010-75	. CHANNEL,INBD AFT.	1	1
- 43	95-620010-77	. GUSSET,INBD	2	1
- 44	95-620010-89	. RIB,INBD AFT.	1	1
- 45	45-620020	. COVER ACCESS HOLE	1	1
		/ATTACHING PARTS/		
	AN507-832R8	. SCREW	1	
		----+----		
- 46	45-620021	. CLAMP ASSY.	1	1
- 47	96-620005-49	. SKIN,INBD TOP LH.	1	1
	96-620005-50	. SKIN,INBD TOP RH.	1	1
- 48	96-620005-51	. SKIN,INBD LOWER LH.	1	1
	96-620005-52	. SKIN,INBD LOWER RH.	1	1
- 49	96-620005-31	. RIB,AFT INBD.	1	1
- 50	96-620005-29	. RIB,OUTBD	1	1
- 51	96-620005-55	. RIB,OUTBD CLOSURE	1	3
	96-620005-27	. TIP,STABILIZER.	1	2
- 52	96-620005-59	. TIP,STABILIZER.	1	3

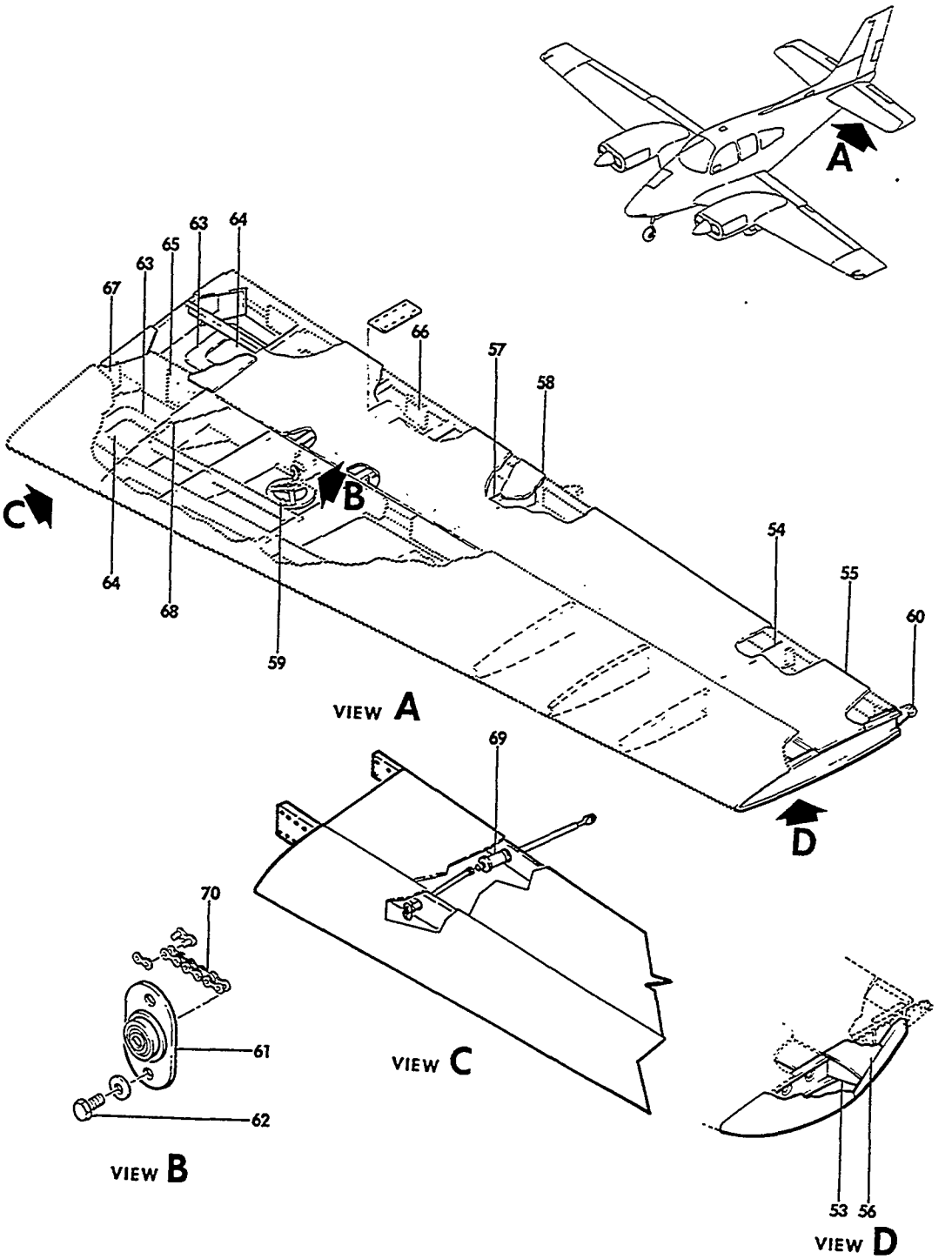

FIGURE 11-01.HORIZONTAL STABILIZER
/SHEET 3 OF 3 SHEETS/

SUB-SECT UNIT & ITEM NO.	PART NO.	DESCRIPTION 1 2 3 4 5 6 7	UNITS PER ASSY	USABLE ON CODE
11-01	96-620005-33	. RIB,TIP	1	2
- 53	96-620005-57	. RIB,TIP	1	3
- 54	96-620005-25	. RIB,OUTBD AFT	1	1
- 55	96-620005-69	. SKIN,OUTBD AFT LH	1	6
	96-620005-121	. SKIN,OUTBD AFT LH	1	5
	96-620005-70	. SKIN,OUTBD AFT RH	1	6
	96-620005-122	. SKIN,OUTBD AFT RH	1	5
- 56	96-620005-63	. SKIN,TIP.	2	3
- 57	96-620005-43	. RIB,AFT MID	1	1
- 58	96-620005-11	. GUSSET,AFT LH	1	1
	96-620005-12	. GUSSET,AFT RH	1	1
- 59	45-620024	. STOP.	1	1
	96-620005-617	. HINGE ASSY,OUTBD.	1	10
- 60	96-610024-601	. HINGE ASSY,OUTBD.	1	11
	R 45-526008	. PLATE ASSY,ELEVATOR TRIM TAB TORQUE CONTROL	1	6
- 61	R 45-526006-5	. PLATE ASSY,ELEVATOR TRIM TAB ACTUATOR TUBE. /ATTACHING PARTS/	1	1
- 62	AN3-3A/M/	. BOLT.	2	
	AN960-10L	. WASHER.	2	
		----*----		
	KP3A	. . BEARING	1	1
- 63	95-110014-383	. DOUBLER ASSY,ACCESS DOOR LH	2	1
	95-110014-384	. DOUBLER ASSY,ACCESS DOOR RH	2	1
- 64	95-110014-253	. DOOR,STABILIZER ACCESS/LH AND RH/ /ATTACHING PARTS/	2	1
	MS24693S50	. SCREW/8 AFT AND 9 FWR DOOR/	17	
		----*----		
- 65	95-620010-93	. SHIM.	1	1
- 66	96-620005-123	. DOUBLER	1	1
- 67	95-620010-71	. RIB,INBD FWD.	1	1
- 68	96-620005-46	. SHIM.	2	1
- 69	R 95-620010-609	. . ACTUATOR ASSY,LH ELEVATOR TRIM TAB/SEE. CHAPTER 27-30-11/	1	6
	96-526013-601	. . ACTUATOR ASSY,LH ELEVATOR TRIM TAB/SEE. CHAPTER 27-30-11/	1	5
	95-620010-610	. . ACTUATOR ASSY,RH ELEVATOR TRIM TAB/SEE. CHAPTER 27-30-11/	1	6
	96-526013-602	. . ACTUATOR ASSY,RH ELEVATOR TRIM TAB/SEE. CHAPTER 27-30-11/ /ATTACHING PARTS/	1	5
	AN3-6A/M/	. . BOLT.	2	6
	MS27039-1-13	. . SCREW	2	5
	AN960D10	. . WASHER.	2	
	MS20365-1032	. . NUT	2	5
		----*----		
	R 96-524000-9	. . CHAIN & CABLE ASSY,LH ELEVATOR TRIM TAB	1	1
- 70	R 96-524000-7	. . CHAIN & CABLE ASSY,RH ELEVATOR TRIM TAB	1	1
	103637	. PLATE,IDENTIFICATION.	1	1
	49384	. FASTENER,PLATE.	2	1

CODES OF EFFECTIVITY

1	TE-1 THRU TE-942 EXCEPT TE-938	2	TE-1 THRU TE-265
3	TE-266 THRU TE-942 EXCEPT TE-938	4	TE-266 THRU TE-617
5	TE-618 THRU TE-942 EXCEPT TE-938	6	TE-1 THRU TE-617
7	TE-1 THRU TE-617 TE-748 THRU TE-942 EXCEPT TE-938	8	TE-618 THRU TE-747
9	TE-748 THRU TE-942 EXCEPT TE-938	10	TE-1 THRU TE-631
11	TE-632 THRU TE-942 EXCEPT TE-938	12	TE-545 THRU TE-942 EXCEPT TE-938
13	TE-1 THRU TE-405 TE-408	14	TE-406,TE-407 TE-409 THRU TE-937 TE-939 THRU TE-942

55-20-01
ELEVATOR AND TAB
TC-1 THRU TC-1607

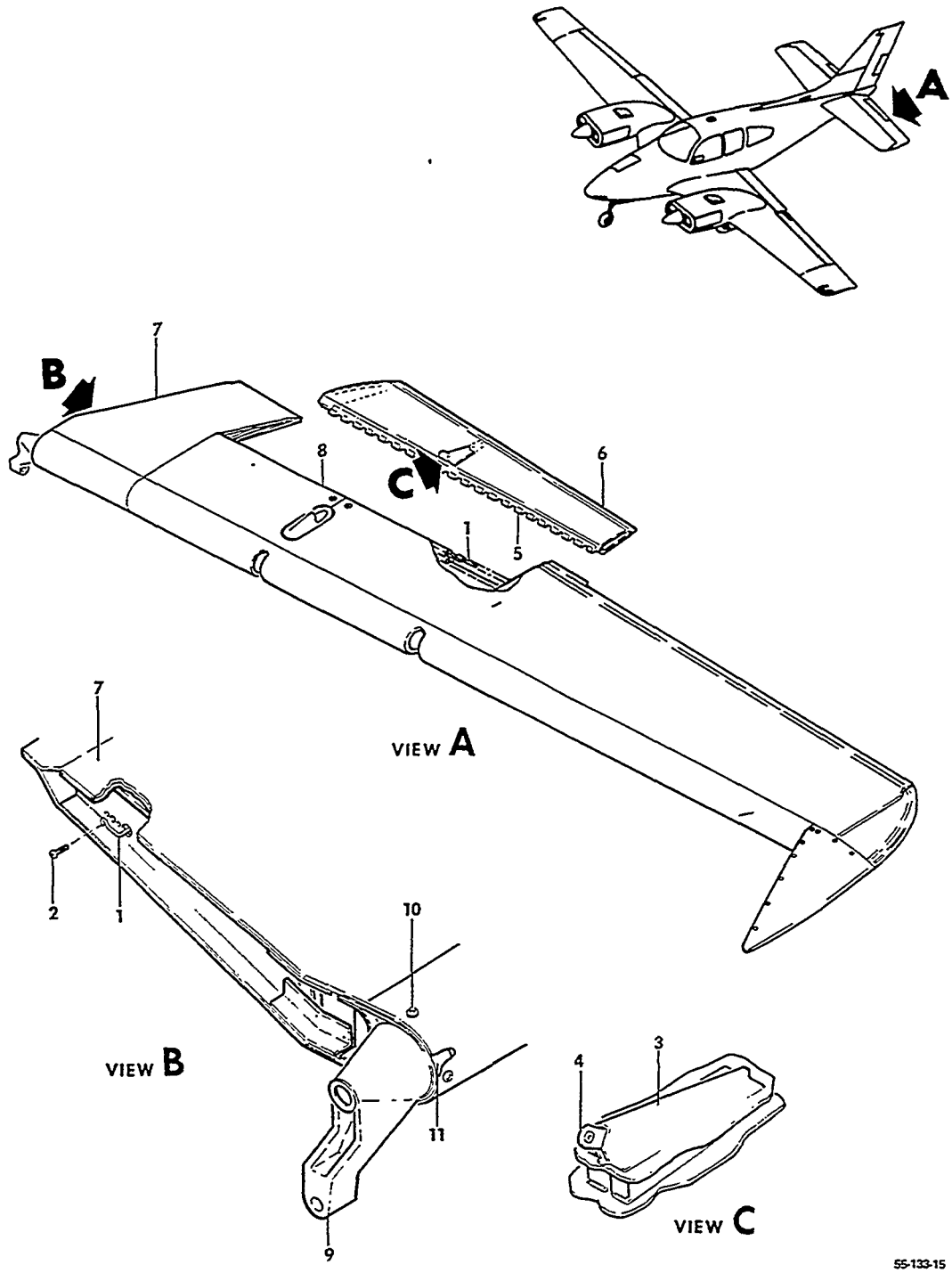

FIGURE 20-01.ELEVATOR AND TAB
/SHEET 1 OF 3 SHEETS/

SUB-SECT UNIT & ITEM NO.	PART NO.	DESCRIPTION 1 2 3 4 5 6 7	UNITS PER ASSY	USABLE ON CODE
20-01	95-610006-601	ELEVATOR ASSEMBLY,LH.	1	2
	95-610006-602	ELEVATOR ASSEMBLY,RH.	1	2
	96-610005-601	ELEVATOR ASSEMBLY,LH.	1	7
	96-610005-602	ELEVATOR ASSEMBLY,RH.	1	7
	96-610005-605	ELEVATOR ASSEMBLY,LH.	1	8
	96-610005-606	ELEVATOR ASSEMBLY,RH.	1	8
	96-610005-615	ELEVATOR ASSEMBLY,LH/SUPERSEDES 96-610005-607/.	1	9
	96-610005-616	ELEVATOR ASSEMBLY,RH/SUPERSEDES 96-610005-608/.	1	9
	R 96-610005-651	ELEVATOR ASSEMBLY,LH/LESS TAB ASSY/	1	2
	R 96-610005-652	ELEVATOR ASSEMBLY,RH/LESS TAB ASSY/	1	2
	96-610005-651	ELEVATOR ASSEMBLY,LH/LESS TAB ASSY/	1	10
	96-610005-652	ELEVATOR ASSEMBLY,RH/LESS TAB ASSY/	1	10
	96-610005-655	ELEVATOR ASSEMBLY,LH/LESS TAB AND HINGE PIN/. .	1	9
	96-610005-656	ELEVATOR ASSEMBLY,RH/LESS TAB AND HINGE PIN/. .	1	9
		/ATTACHING PARTS/		
	R 130909B19	BOLT,INBD FITTING	1	
	AN3-10/M/	BOLT,HINGE/SEE BEECHCRAFT	2	
		SERVICE INSTRUCTION 0636-133/		
		/ATTACHING PARTS/		
	AN173-10/M/	BOLT,HINGE/SEE BEECHCRAFT	2	
		SERVICE INSTRUCTION 0636-133/		
		/ATTACHING PARTS/		
	R AN960-416	WASHER,FITTING BOLT/3 UNDER NUT/.	3	
	R 35-600003	BUSHING	2	
	AN960-10	WASHER,HINGE BOLT/2 UNDER NUT/.	4	
	R 130909N48	NUT,FITTING BOLT.	1	
	AN310-3	NUT,HINGE BOLT.	2	
	100696X-ZC004	SPACER,HINGE.	4	
	MS24665-132	PIN,COTTER/HINGE BOLT/.	2	
	MS25083-2AA4	. JUMPER,BONDING.	2	1
		/ATTACHING PARTS/		
	AN515-6R8	. SCREW	4	
	105090-032-1-016	. WASHER.	4	
	MS20365-632	. NUT	4	
	45-610005-122	. TAB ASSEMBLY,LH ELEVATOR.	1	1
	45-610005-123	. TAB ASSEMBLY,RH ELEVATOR.	1	1
		/ATTACHING PARTS/		
- 1	95-610006-27	. PIN,HINGE	1	1
- 2	AN526-832R	. SCREW	1	
	AN960-8	. WASHER.	1	
- 3	45-610005-38	. BRACKET,TAB HORN.	1	1
- 4	96-610021-43	. . HORN ASSEMBLY,ELEVATOR TAB.	1	1
- 5	96-610021-29	. . HINGE,LH ELEVATOR TAB ASSY.	1	1
	96-610021-30	. . HINGE,RH ELEVATOR TAB ASSY.	1	1
- 6	96-610021-3	. . SKIN,LH ELEVATOR TAB.	1	1
	96-610021-4	. . SKIN,RH ELEVATOR TAB.	1	1
	96-610006-31	. STRUCTURE ASSY,LH ELEVATOR.	1	2
	96-610006-32	. STRUCTURE ASSY,RH ELEVATOR.	1	2
	96-610006-41	. STRUCTURE ASSY,LH ELEV/WITH UTILITY BAG DR/ .	1	2
	96-610005-42	. STRUCTURE ASSY,LH ELEV/WITH UTILITY BAG DR/ .	1	2
	96-610005-37	. STRUCTURE ASSY,LH ELEVATOR.	1	3
	96-610005-38	. STRUCTURE ASSY,RH ELEVATOR.	1	3
- 7	95-610006-23	. . SKIN,ELEVATOR INBD.	1	2
- 8	45-610005-4	. . SKIN,ELEVATOR OUTBD LH.	1	2
	45-610005-5	. . SKIN,ELEVATOR OUTBD RH.	1	2
- 9	95-610005-3	. . FITTING,ELEVATOR LH	1	1
	95-610005-4	. . FITTING,ELEVATOR RH	1	1
		/ATTACHING PARTS/		
- 10	AN23-9A/M/	. . SCREW	4	
	AN960-10	. . WASHER.	4	
	MS20365-1032	. . NUT	4	
	NAS77-4-97	. . BUSHING,ELEVATOR FITTING.	1	6
- 11	45-610005-11	. . SHIM.	1	1

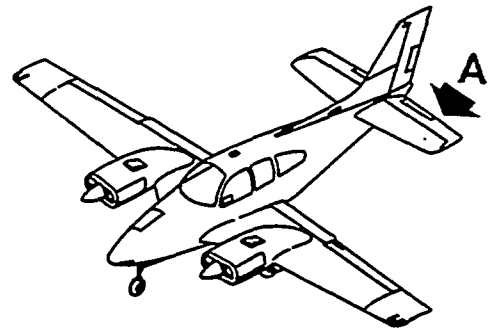

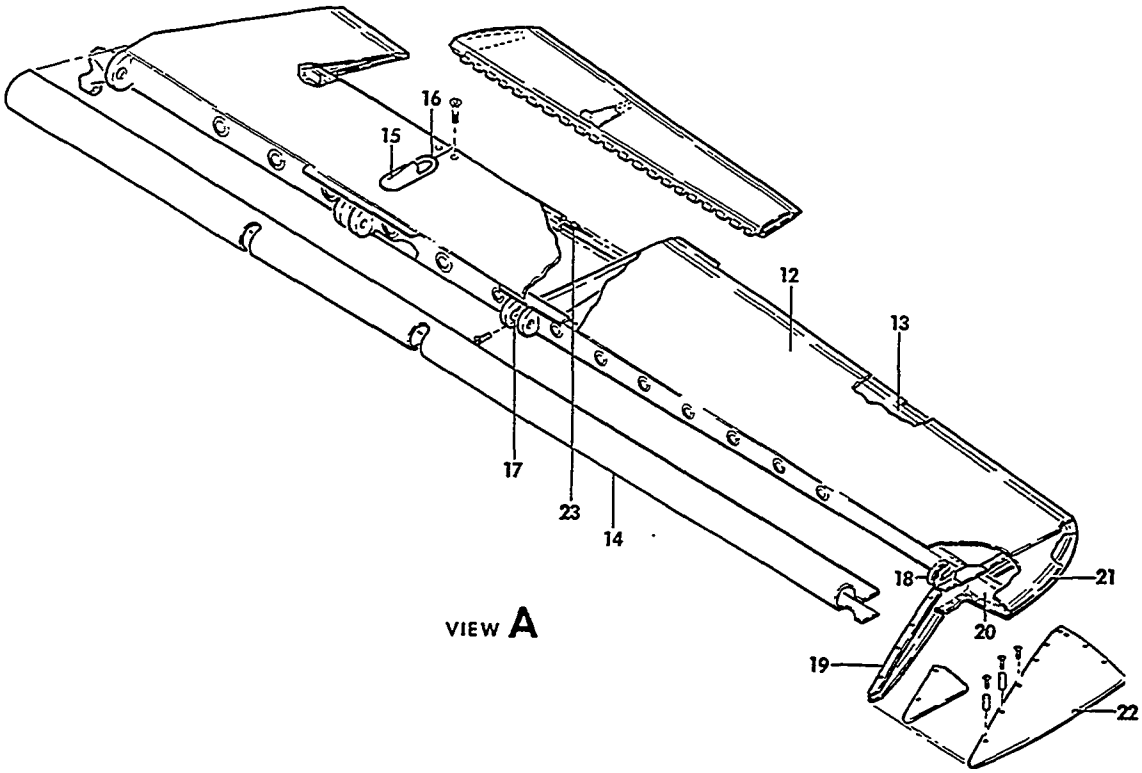

55-133-16

FIGURE 20-01.ELEVATOR AND TAB
/SHEET 2 OF 3 SHEETS/

SUB-SECT UNIT & ITEM NO.	PART NO.	DESCRIPTION 1 2 3 4 5 6 7	UNITS PER ASSY	USABLE ON CODE
20-01 - 12	96-610005-5	. . PANEL ASSEMBLY,ELEVATOR LH UPPER/BONDED/. .	1	3
	96-610005-6	. . PANEL ASSEMBLY,ELEVATOR RH UPPER/BONDED/. .	1	3
- 13	96-610005-17	. . PANEL ASSEMBLY,ELEVATOR LH LOWER/BONDED/. .	1	3
	96-610005-18	. . PANEL ASSEMBLY,ELEVATOR RH LOWER/BONDED/. .	1	3
- 14	96-610005-15	. . SKIN,ELEVATOR LH NOSE	1	3
	96-610005-16	. . SKIN,ELEVATOR RH NOSE	1	3
- 15	45-610005-100	. . FAIRING	1	1
- 16	45-610005-102	. . FAIRING	1	1
- 17	35-650122-8	. . BRACKET,CENTER HINGE.	1	1
- 18	35-650121-8	. . BRACKET,OUTBD HINGE	1	1
		/ATTACHING PARTS/		
	R 130909S3	. . SCREW	4	
	AN960-10L	. . WASHER.	4	
	45-660011	. . RIB ASSEMBLY,ELEVATOR OUTBD	1	2
	96-610005-23	. . RIB ASSEMBLY,ELEVATOR OUTBD	1	3
	45-660011-2	. . . RIB,OUTD.	1	2
- 19	96-610005-25	. . . RIB,OUTBD	1	3
	45-610011-4	. . . PLATE,UPPER	1	1
	45-610011-6	. . . PLATE,LOWER	1	1
	AN366F832	. . . NUTPLATE.	6	1
- 20	45-610002	. . RIB,ELEVATOR TIP.	1	1
- 21	96-610005-13	. . SKIN,LH ELEVATOR TIP.	1	3
	96-610005-14	. . SKIN,RH ELEVATOR TIP.	1	3
- 22	45-660012-1	. . SKIN,ELEVATOR HORN.	1	1
		/ATTACHING PARTS/		
	AN507-832R7	. . SCREW	14	
	AN507-832R10	. . SCREW	2	
	AN960-D8	. . WASHER.	6	
	112105	. . WASHER.	4	
	MS20365-832	. . NUT	2	
- 23	45-610005-54	. . HINGE,ELEVATOR LH	1	1
	45-610005-55	. . HINGE,ELEVATOR RH	1	1
		/ATTACHING PARTS/		
	AN526-632-12	. . SCREW	3	
	AN960A6	. . WASHER.	3	
	NAS43D01-25	. . SPACER.	3	
	MS20365-632	. . NUT	3	

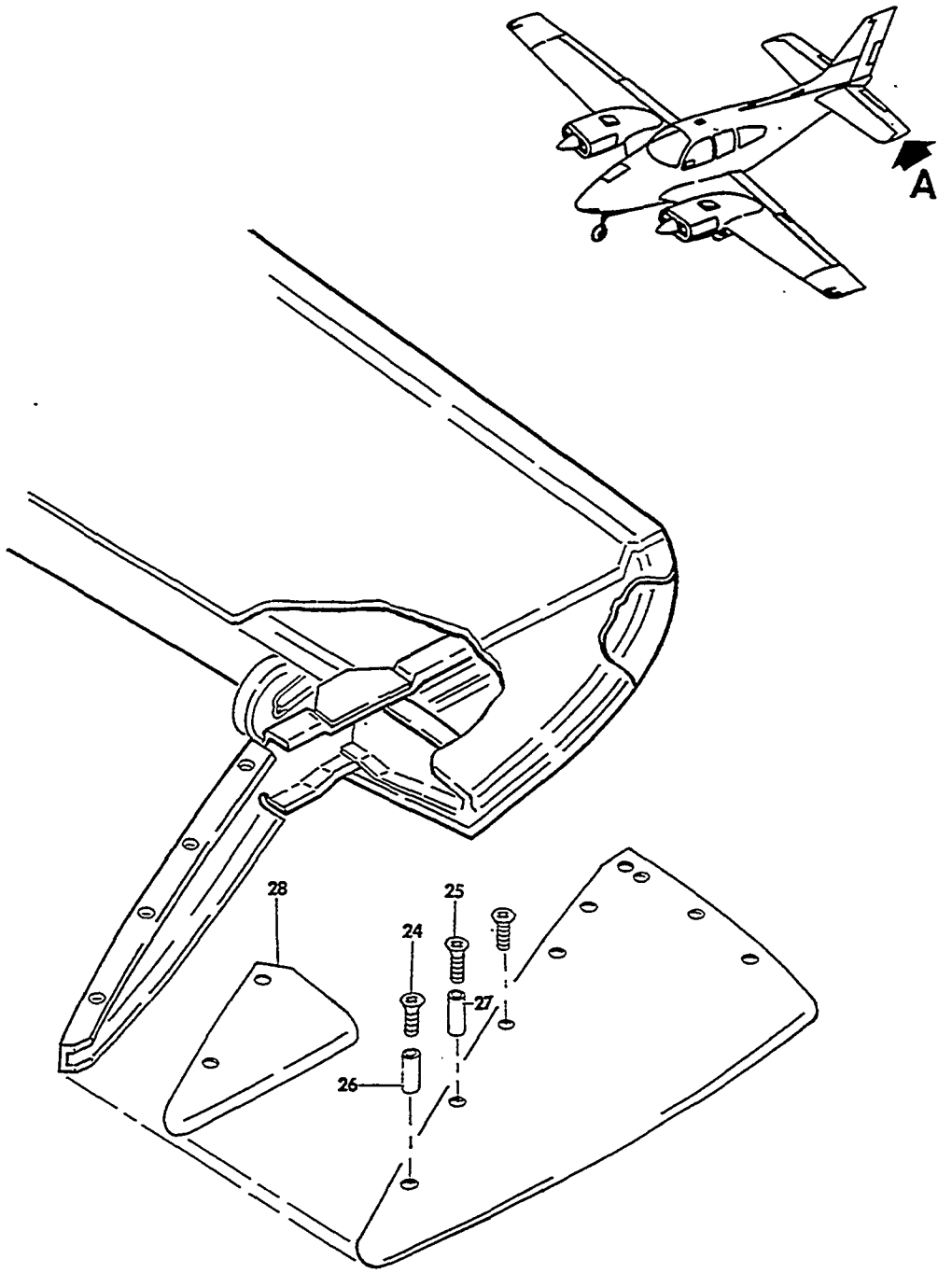

VIEW A

55-133-17

FIGURE 20-01. ELEVATOR AND TAB
/SHEET 3 OF 3 SHEETS/

ATA CODE & INDEX NO.	PART NO.	DESCRIPTION 1 2 3 4 5 6 7	UNITS PER ASSY	USABLE ON CODE
20-01	45-660013	. . WEIGHT ASSEMBLY,ELEVATOR/WITH UTILITY BAGGAGE DOOR/ . . .	1	2
	95-610006-43	. . WEIGHT ASSEMBLY,ELEVATOR.	1	4
	96-610025-1	. . WEIGHT ASSEMBLY,ELEVATOR. . . . . /ATTACHING PARTS/	1	5
- 24	AN507-832R7	. . SCREW	1	
- 25	AN507-832R10	. . SCREW	1	
	AN936D8	. . WASHER.	2	
		——*——		
- 26	45-630012-6	. . . INSERT.	1	1
- 27	45-630012-8	. . . INSERT.	1	1
	45-660013-2	. . . WEIGHT,BALANCE/WITH UTILITY BAGGAGE DOOR/	1	2
	95-610006-45	. . . WEIGHT,BALANCE.	1	4
- 28	96-610025-3	. . . WEIGHT,BALANCE.	1	5

NOTE THE ELEVATOR ASSEMBLIES WITH SMOOTH SKINS MAY BE USED PRIOR TO TC-547 IF BOTH ELEVATORS ARE REPLACED.SPECIFY WHETHER OR NOT AIRCRAFT HAS UTILITY BAGGAGE DOOR WHEN ORDERING ELEVATORS WITH BEADED SKINS

CODES OF EFFECTIVITY

1	TC-1 THRU TC-1607 EXCEPT TC-350	2	TC-1 THRU TC-546 EXCEPT TC-350
3	TC-547 THRU TC-1607	4	TC-1 THRU TC-1498 EXCEPT TC-350
5	TC-1499 THRU TC-1607	6	TC-1334 THRU TC-1607
7	TC-547 THRU TC-1046	8	TC-1047 THRU TC-1143
9	TC-1144 THRU TC-1607	10	TC-547 THRU TC-1143

"END"

55-21-01
ELEVATOR AND TAB
TE-1 THRU TE-942 EXCEPT TE-938

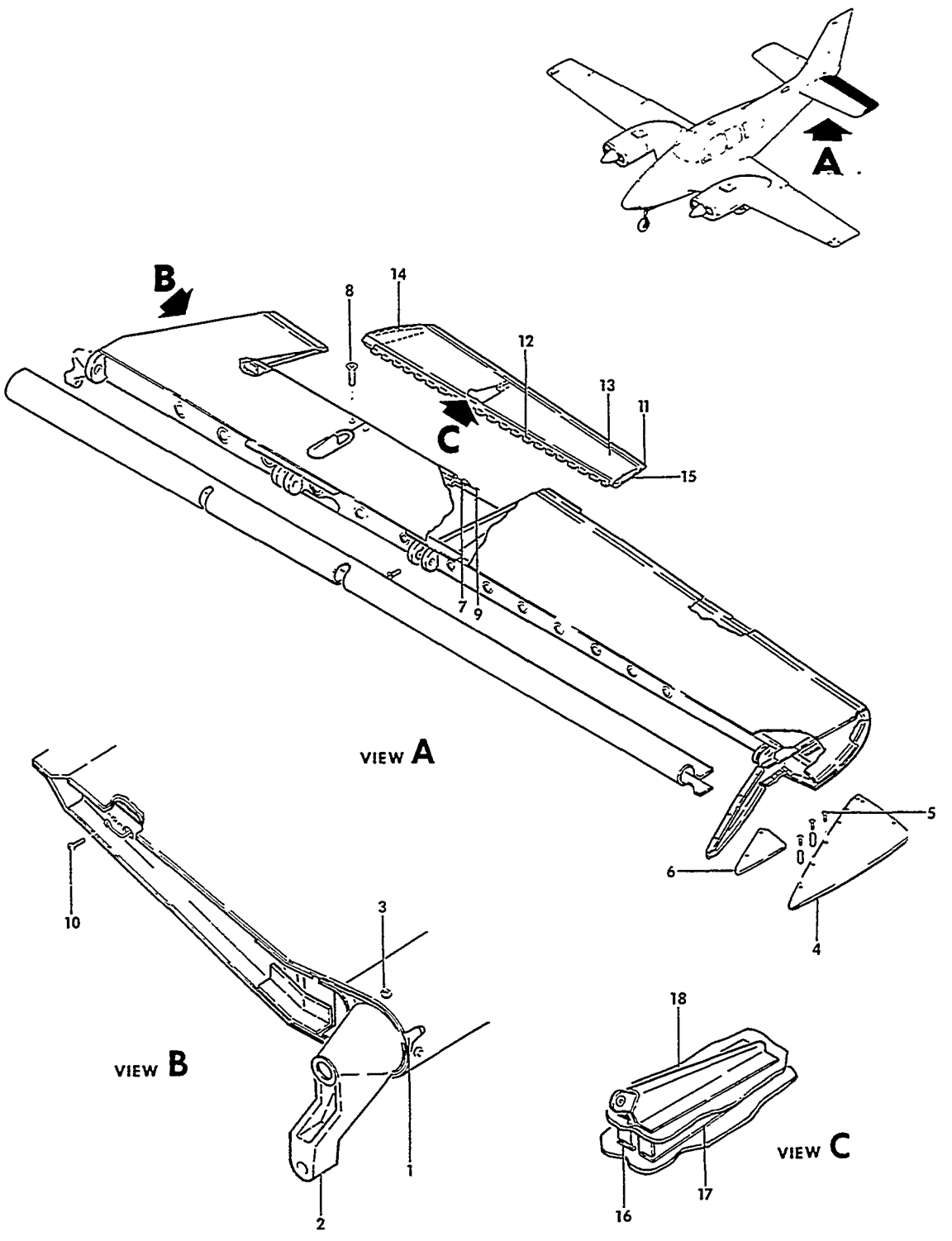

FIGURE 21-01. ELEVATOR AND TAB
/SHEET 1 OF 2 SHEETS/

SUB-SECT UNIT & ITEM NO.	PART NO.	DESCRIPTION 1 2 3 4 5 6 7	UNITS PER ASSY	USABLE ON CODE
21-01	96-610006-601	ELEVATOR ASSEMBLY,LH/ORDER 96-610006-651/ . . .	1	2
	96-610006-602	ELEVATOR ASSEMBLY,LH/ORDER 96-610006-652/ . . .	1	2
	96-610006-651	ELEVATOR ASSEMBLY,LH/LESS TAB AND HINGE PIN/. .	1	2
	96-610006-652	ELEVATOR ASSEMBLY,RH/LESS TAB AND HINGE PIN/. .	1	2
	96-610006-609	ELEVATOR ASSEMBLY,LH/ORDER 96-610006-653/ . . .	1	3
	96-610006-610	ELEVATOR ASSEMBLY,LH/ORDER 96-610006-654/ . . .	1	3
	96-610006-655	ELEVATOR ASSEMBLY,LH/LESS TAB AND HINGE PIN/. .	1	4
	96-610006-656	ELEVATOR ASSEMBLY,RH/LESS TAB AND HINGE PIN/. .	1	4
	96-610006-613	ELEVATOR ASSEMBLY,LH.	1	5
	96-610006-614	ELEVATOR ASSEMBLY,RH.	1	5
	96-610006-615	ELEVATOR ASSEMBLY,LH.	1	6
	96-610006-616	ELEVATOR ASSEMBLY,RH.	1	6
- 1	95-610005-11	. SHIM.	1	1
- 2	95-610005-603	. FITTING ASSEMBLY,ELEVATOR LH.	1	7
	95-610005-604	. FITTING ASSEMBLY,ELEVATOR RH.	1	7
		/ATTACHING PARTS/		
- 3	MS27039-1-12	. SCREW	4	
	AN960-10L	. WASHER.	4	
	AN960-10	. WASHER.	8	
	R 130909N29	. NUT	4	
		——*——		
	95-610005-3	. . FITTING,ELEVATOR LH	1	1
	95-610005-4	. . FITTING,ELEVATOR RH	1	1
	NAS774-97	. . BUSHING,ELEVATOR FITTING.	1	7
	96-610006-23	. SKIN,TIP.	1	2
- 4	96-610006-47	. SKIN,TIP/ALSO USED WITH 96-610006-651	1	8
		AND-652 ASSY PRIOR TO EFFECTIVITY TE-477/		
		/ATTACHING PARTS/		
- 5	AN509-8R7	. SCREW	22	
	AN936D8	. WASHER.	6	
	AN960-8	. WASHER.	4	
	MS20365-832	. NUT	2	
		——*——		
	96-610006-25	. WEIGHT ASSY,ELEVATOR BALANCE.	1	2
	95-610005-43	. WEIGHT ASSY,ELEVATOR BALANCE.	1	3
- 6	96-610022	. WEIGHT ASSY,ELEVATOR BALANCE.	1	10
- 7	45-610005-54	. HINGE,LH.	1	1
	45-610005-55	. HINGE,RH.	1	1
		/ATTACHING PARTS/		
- 8	R MS35206-232	. SCREW	3	
	AN960D6	. WASHER.	3	
	NAS43DD1-25	. SPACER.	3	
	MS20365-632	. NUT	3	
		——*——		
	96-610006-69	. TAB ASSY,LH/SEE BEECHCRAFT SERVICE.	1	9
		INSTRUCTION 0610-152 REVISION 2/		
	96-610006-70	. TAB ASSY,RH/SEE BEECHCRAFT SERVICE.	1	9
		INSTRUCTION 0610-152 REVISION 2/		
	96-610006-67	. TAB ASSY,LH/SEE BEECHCRAFT SERVICE.	1	10
		INSTRUCTION 0610-152 REVISION 2/		
	96-610006-68	. TAB ASSY,RH/SEE BEECHCRAFT SERVICE.	1	10
		INSTRUCTION 0610-152 REVISION 2/		
		/ATTACHING PARTS/		
- 9	95-610006-27	. PIN,HINGE	1	1
- 10	NAS602-8	. SCREW	1	
	AN960-8	. WASHER.	1	
		——*——		
- 11	96-610021-43	. . HORN ASSY	1	1
- 12	96-610021-29	. . HINGE,LH.	1	1
	96-610021-30	. . HINGE,RH.	1	1
- 13	96-610021-3	. . SKIN,LH TAB	1	1
	96-610021-4	. . SKIN,RH TAB	1	1
- 14	96-610021-13	. . RIB,INBOARD	1	1
- 15	96-610021-17	. . RIB,OUTBOARD.	1	1
- 16	96-610021-27	. . RIB,INBOARD	1	1
- 17	96-610021-28	. . RIB,OUTBOARD.	1	1
- 18	96-610021-35	. . BRACKET	1	1

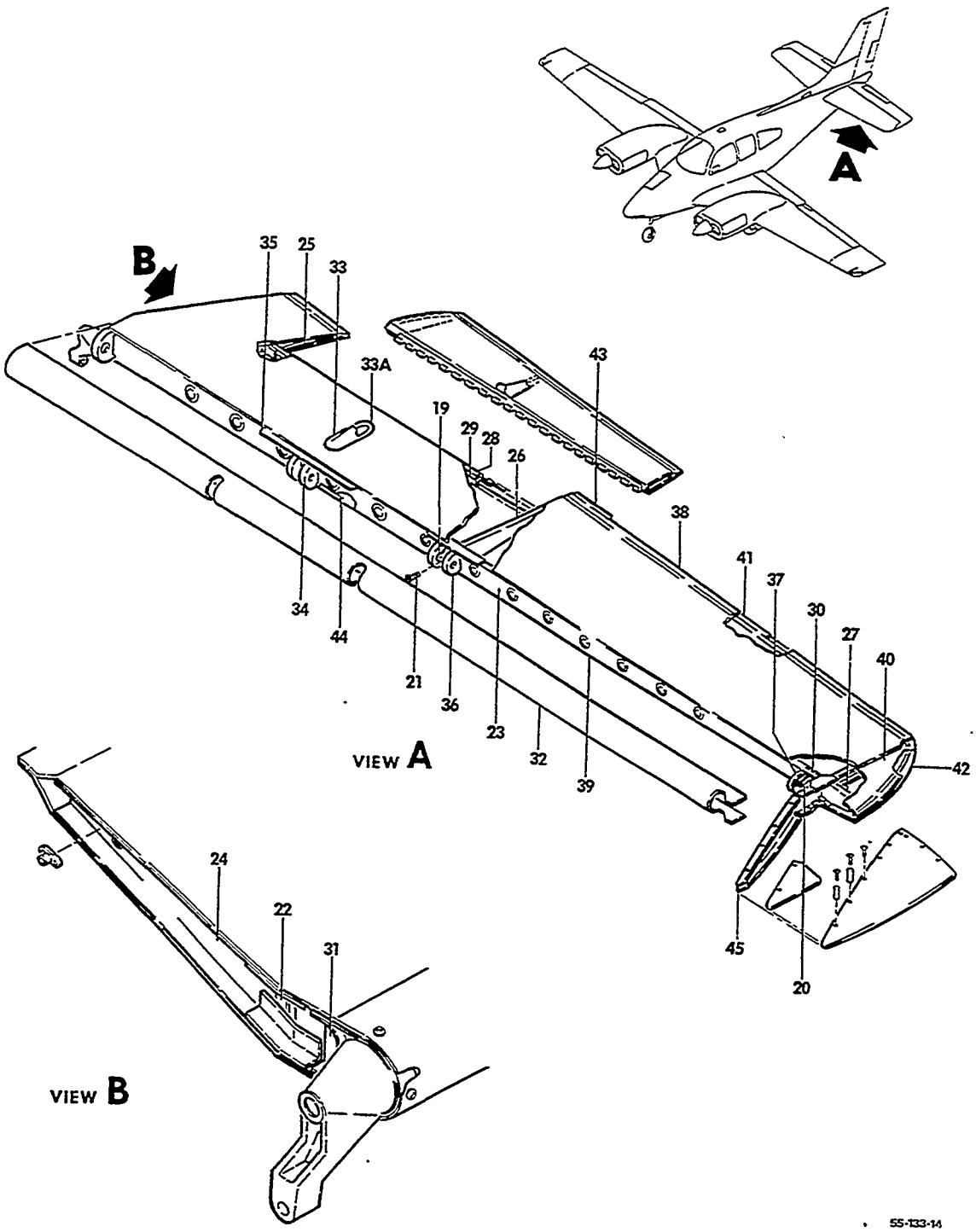

FIGURE 21-01.ELEVATOR AND TAB
/SHEET 2 OF 2 SHEETS/

SUB-SECT UNIT & ITEM NO.	PART NO.	DESCRIPTION 1 2 3 4 5 6 7	UNITS PER ASSY	USABLE ON CODE
21-01 - 19	35-650122-8	BRACKET,CENTER ELEVATOR HINGE	1	1
- 20	35-650121-8	BRACKET,OUTBOARD ELEVATOR HINGE	1	1
		SEE BEECHCRAFT S. I. 0636-133		
- 21	AN502-10-10	SCREW,HINGE BRACKET ATTACH.	4	1
	AN960-10L	WASHER.	4	1
- 22	103637	PLATE,IDENTIFICATION.	1	1
	49384	FASTENER,PLATE.	2	1
- 23	96-610006-13	SPAR,FWD.	1	1
- 24	95-610006-21	RIB	1	1
- 25	96-610005-27	RIB	1	1
- 26	96-610006-37	RIB	1	1
- 27	R 96-610006-53	RIB ASSEMBLY,OUTBD TIP.	1	1
	R NAS697A08	. NUTPLATE.	2	1
	R NAS696A08	. NUTPLATE.	4	1
- 28	45-610005-104	CHANNEL,UPPER LH.	1	1
	45-610005-105	CHANNEL,UPPER RH.	1	1
- 29	45-610005-106	CHANNEL,LOWER LH.	1	1
	45-610005-107	CHANNEL,LOWER RH.	1	1
	95-610006-37	CLIP.	1	1
- 30	95-610006-29	ANGLE,UPPER LH AND LOWER RH	1	1
	95-610006-30	ANGLE,LOWER LH AND UPPER RH	1	1
- 31	45-610005-6	BRACKET	1	1
- 32	R 96-610006-71	SKIN,NOSE/SPARE FOR 96-610006-3/.	1	1
- 33	45-610005-100	FAIRING	1	1
- 33A	45-610005-102	FAIRING	1	1
- 34	45-610005-92	RIB,NOSE.	1	1
- 35	R 95-610006-33	DOUBLER	2	3
- 36	45-610005-94	RIB,NOSE.	1	1
	R 45-610005-30	DOUBLER	1	1
- 37	96-610006-33	RIB,NOSE.	1	1
	R 96-610006-29	DOUBLER	1	3
	R 96-610006-49	GUSSET.	2	3
- 38	96-610006-9	SKIN ASSY,LH UPPER.	1	1
	96-610006-10	SKIN ASSY,RH UPPER.	1	1
- 39	96-610006-11	SKIN ASSY,LH LOWER.	1	1
	96-610006-12	SKIN ASSY,RH LOWER.	1	1
- 40	96-610006-17	SKIN,LH OUTBD	1	1
	96-610006-18	SKIN,RH OUTBD	1	1
- 41	96-610006-15	SPACER.	1	1
- 42	96-610006-35	SPACER.	1	1
	96-610006-41	DOUBLER	2	1
- 43	96-610006-39	TAB,FIXED	1	1
- 44	R 45-610005-114	CHANNEL,SPAR.	2	8
- 45	96-610006-45	RIB,CLOSURE	1	1

CODES OF EFFECTIVITY

1	TE-1 THRU TE-942 EXCEPT TE-938	2	TE-1 THRU TE-266 TE-269
3	TE-267 AND TE-268 TE-270 THRU TE-617	4	TE-618 THRU TE-757
5	TE-758 THRU TE-837	6	TE-838 THRU TE-942 EXCEPT TE-938
7	TE-802 THRU TE-942 EXCEPT TE-938	8	TE-477 THRU TE-942 EXCEPT TE-938
9	TE-1 THRU TE-617	10	TE-618 THRU TE-942 EXCEPT TE-938
11	TE-1 THRU TE-819	12	TE-820 THRU TE-942 EXCEPT TE-938

55-30-01
VERTICAL STABILIZER

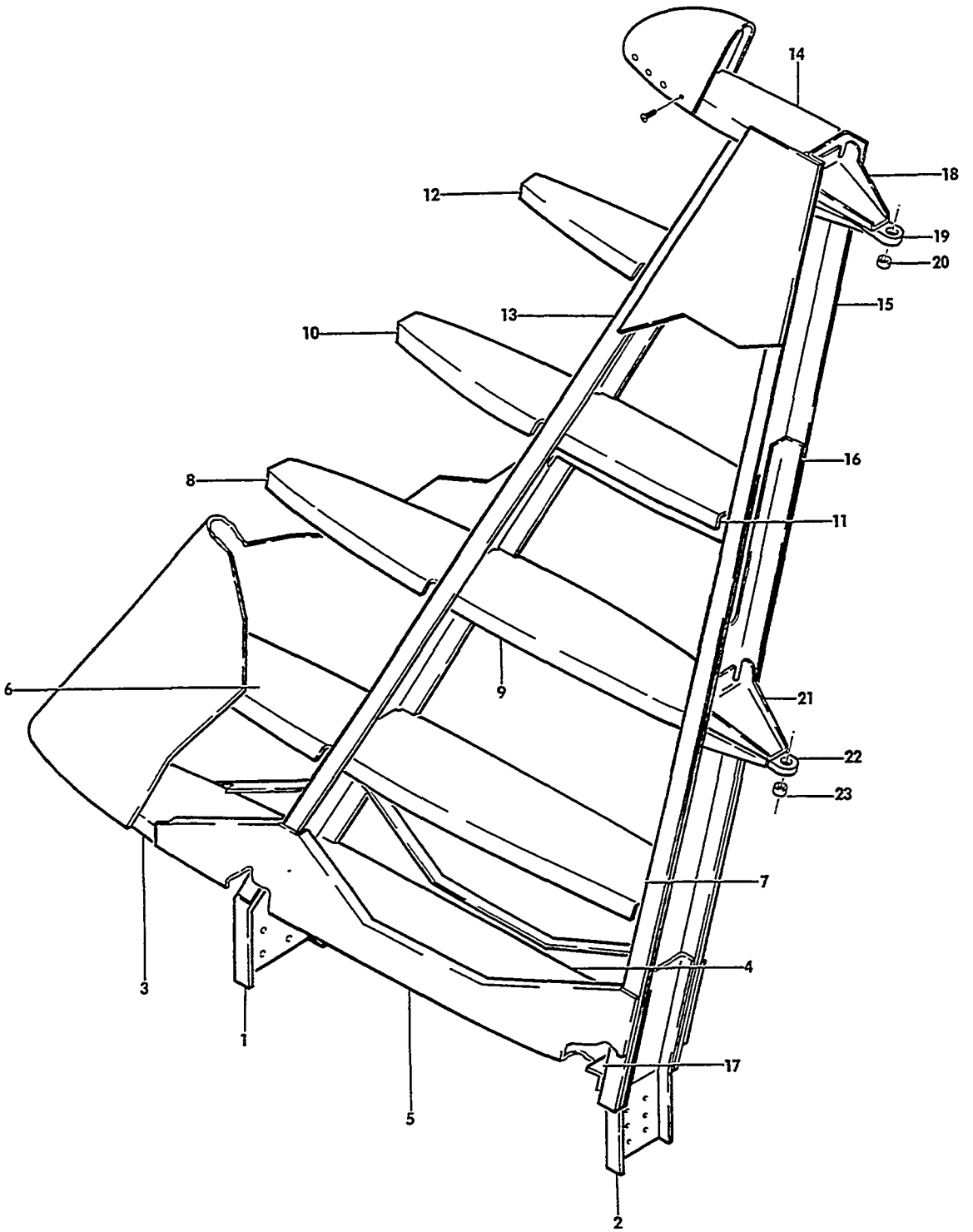

FIGURE 30-01.VERTICAL STABILIZER
/SHEET 1 OF 2 SHEETS/

SUB-SECT UNIT & ITEM NO.	PART NO.	DESCRIPTION 1 2 3 4 5 6 7	UNITS PER ASSY	USABLE ON CODE
30-01	96-640000-606	STABILIZER ASSY,VERTICAL.	1	8
	96-640000-601	STABILIZER ASSY,VERTICAL.	1	7
	96-640010	. FITTING,FWD SPAR EXTENSION.	1	2
	96-640010-1	. FITTING,FWD SPAR EXTENSION.	1	3
- 1	96-640010-3	. FITTING,FWD SPAR EXTENSION.	1	4
		/ATTACHING PARTS/		
	SLSP-T8-4	. HUCK BOLT	8	
	6LC-C8	. COLLAR.	8	
		——*——		
	96-640011	. FITTING,AFT SPAR EXTENSION.	1	5
- 2	96-640011-1	. FITTING,AFT SPAR EXTENSION.	1	4
		/ATTACHING PARTS/		
	SLSP-T8-4	. HUCK BOLT	8	
	LC-C8	. COLLAR.	8	
		——*——		
- 3	96-640000-43	. RIB,VERTICAL STAB FWD	1	1
- 4	96-640000-193	. RIB,VERTICAL STAB AFT	1	1
- 5	96-640000-39	. GUSSET,VERTICAL STAB LOWER LH	1	1
	96-640000-40	. GUSSET,VERTICAL STAB LOWER RH	1	1
- 6	96-640000-3	. RIB,VERTICAL STAB FWD	1	1
- 7	96-640000-17	. RIB,VERTICAL STAB AFT	1	1
- 8	96-640000-5	. RIB,VERTICAL STAB FWD	1	1
- 9	96-640000-15	. RIB,VERTICAL STAB AFT	1	1
- 10	96-640000-7	. RIB,VERTICAL STAB FWD	1	1
- 11	96-640000-13	. RIB,VERTICAL STAB AFT	1	1
- 12	96-640000-9	. RIB,VERTICAL STAB FWD	1	1
- 13	96-640000-19	. SPAR,VERTICAL STAB FRONT.	1	1
- 14	96-640000-11	. RIB,VERTICAL STAB UPPER	1	1
- 15	96-640000-45	. SPAR,VERTICAL STAB REAR	1	1
- 16	96-640000-37	. DOUBLER,VERTICAL STAB REAR SPAR	1	1
- 17	96-640000-195	. ANGLE,REAR SPAR	1	1
	96-640000-25	. BRACKET ASSY,UPPER RUDDER HINGE	1	2
	96-640000-95	. BRACKET ASSY,UPPER RUDDER HINGE	1	6
- 18	96-640000-23	. . BRACKET	2	1
- 19	96-640000-21	. . PLATE	1	2
- 20	R NAS505-3J	. . BEARING	1	2
	96-640000-631	. . PLATE ASSY,UPPER RUDDER HINGE	1	6
	NAS505-4J	. . . BEARING	1	6
	96-640000-51	. BRACKET ASSY,LOWER RUDDER HINGE	1	2
	96-640000-99	. BRACKET ASSY,LOWER RUDDER HINGE	1	6
- 21	96-640000-49	. . BRACKET	2	1
- 22	96-640000-47	. . PLATE	1	2
- 23	NAS505-3J	. . BEARING	1	2
	96-640000-633	. . PLATE ASSY,LOWER RUDDER HINGE	1	6
	NAS505-4J	. . . BEARING	1	6

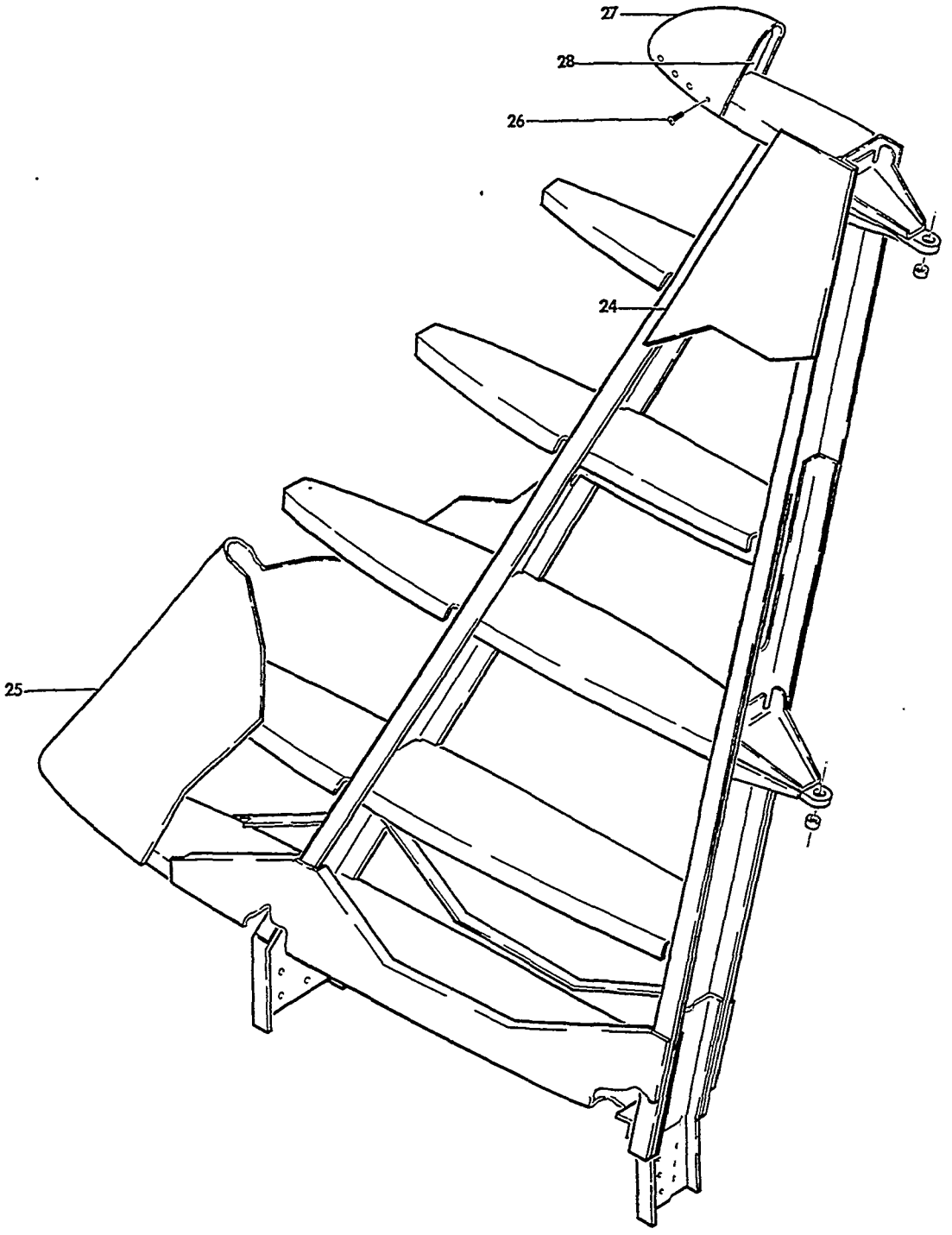

55-134-11

FIGURE 30-01.VERTICAL STABILIZER
/SHEET 2 OF 2 SHEETS/

SUB-SECT UNIT & ITEM NO.	PART NO.	DESCRIPTION 1 2 3 4 5 6 7	UNITS PER ASSY	USABLE ON CODE
30-01 - 24	96-640000-55	. SKIN,VERTICAL STAB LH	1	1
	96-640000-56	. SKIN,VERTICAL STAB RH	1	1
- 25	96-640000-57	. SKIN,VERTICAL STABILIZER LEADING EDGE	1	1
	96-640000-31	. TIP ASSY,VERTICAL STABILIZER. . . . . /WITHOUT ROTATING BEACON PROVISIONS/ /ATTACHING PARTS/	1	1
- 26	MS27039-0808	. SCREW	6	
	MK1000-832	. NUTPLATE.	6	
		----*----		
- 27	96-640000-29	. . TIP/WITHOUT ROTATING BEACON PROVISIONS/ . .	1	1
- 28	96-640000-27	. . BULKHEAD/WITH OR WITHOUT ROTATING BEACON/ .	1	1
	96-364036-7	TIP ASSY,VERTICAL STABILIZER/WITH OPTIONAL. . . ROTATING BEACON/SEE CHAPTER 33 FOR PARTS/	1	1
	96-640000-197	STABILIZER ASSY,VERTICAL.	1	1

NOTE THE 96-640000-197 STABILIZER ASSY MAY BE USED AS A SPARES REPLACEMENT FOR THE 96-640000 STABILIZER ASSY BY ADDING MS27039-0805 SCREW,4 REQD,MAS451-7 PLUG BUTTON AND NAS451-16 PLUG BUTTON 1EA REQD IN OPEN HOLES ON EACH SIDE OF STABILIZER

CODES OF EFFECTIVITY

1	TC-1 THRU TC-1607 TE-1 THRU TE-942 EXCEPT TE-938	2	TC-1 THRU TC-121
3	TC-121 THRU TC-1256 TE-1 THRU TE-750	4	TC-1257 THRU TC-1607 TE-751 THRU TE-942 EXCEPT TE-938
5	TC-1 THRU TC-1256 TE-1 THRU TE-750	6	TC-121 THRU TC-1607 TE-1 THRU TE-942 EXCEPT TE-938
7	TC-1 THRU TC-240	8	TC-241 THRU TC-1607 TE-1 THRU TE-942 EXCEPT TE-938

55-40-01
RUDDER AND TAB ASSEMBLY

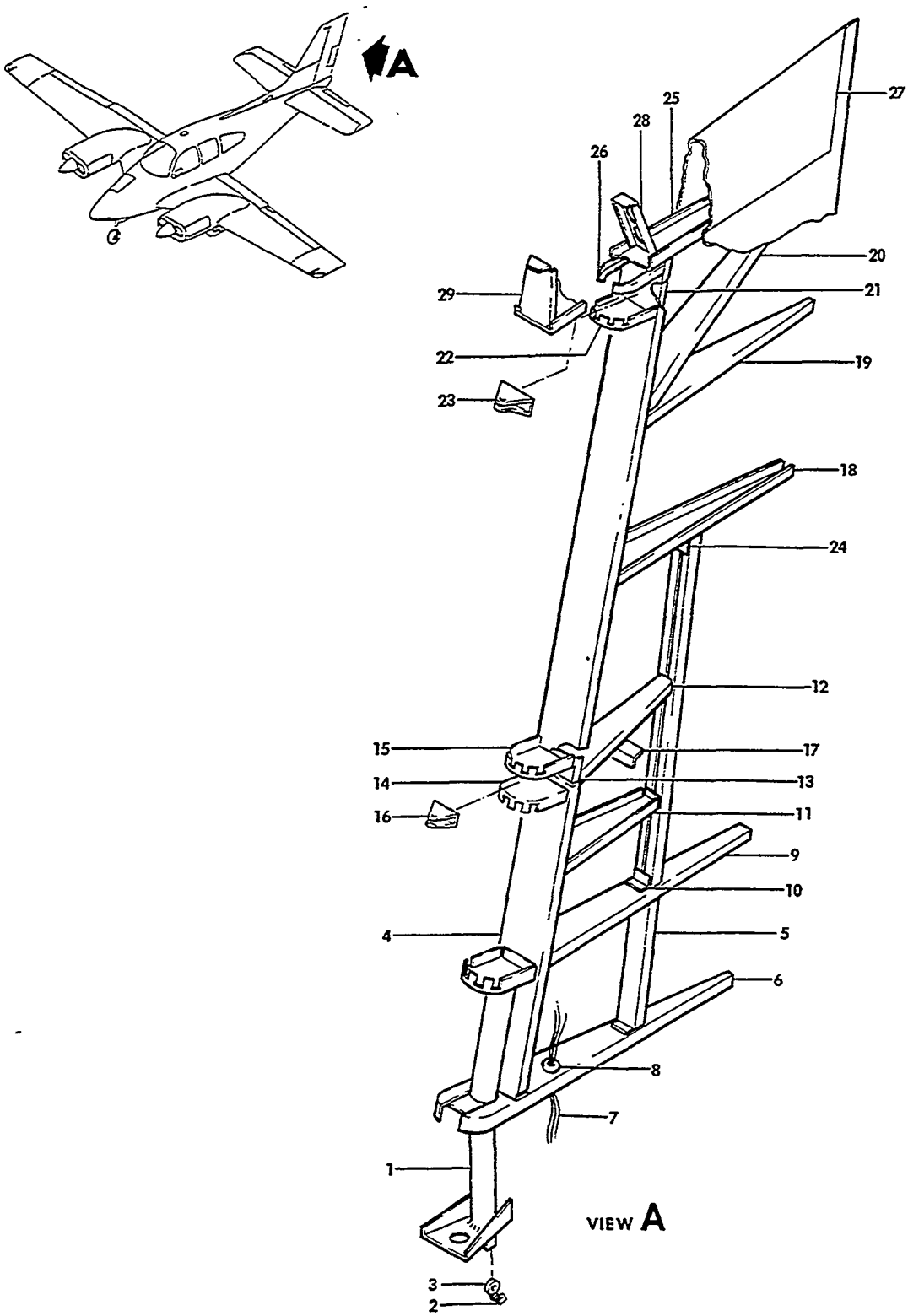

FIGURE 40-01. RUDDER AND TAB ASSEMBLY
/SHEET 1 OF 3 SHEETS/

SUB-SECT UNIT & ITEM NO.	PART NO.	DESCRIPTION 1 2 3 4 5 6 7	UNITS PER ASSY	USABLE ON CODE
40-01	96-630000-601	RUDDER ASSEMBLY	1	1
	96-630000-606	RUDDER ASSY	1	2
	96-630000-607	RUDDER ASSEMBLY	1	3
	96-630000-608	RUDDER ASSEMBLY	1	4
	96-630000-610	RUDDER ASSEMBLY	1	5
	96-630000-609	RUDDER ASSEMBLY	1	6
	96-630000-47	. WELD ASSEMBLY	1	7
- 1	96-630000-333	. WELD ASSEMBLY	1	8
- 2	96-630000-101	. GUARD,CABLE	1	
- 3	1185408HP1	. PULLEY/SUPERSEDES 13000BEP1 AND 130001BB1/.	2	
		/ATTACHING PARTS/		
	AN3-11	. BOLT.	1	
	AN960-10L	. WASHER.	1	
	MS21042-3	. NUT	1	
- 4	96-630000-19	. SPAR,FRONT.	1	
- 5	96-630000-91	. STIFFENER	1	
- 6	96-630000-27	. RIB,LOWER RUDDER.	1	
- 7	58-360000-603	. HARNESS ASSEMBLY,ROTATING BEACON.	1	9
- 8	MS21266-1N	. GROMMET	1	9
- 9	96-630000-23	. RIB	1	
- 10	96-630000-119	. ANGLE	1	
- 11	96-630000-109	. RIB	1	
	96-630000-115	. RIB	1	10
- 12	96-630000-313	. RIB	1	11
	96-630000-315	. RIB/SPARES REPL FOR 96-630000-313/.	1	11
- 13	96-630000-307	. DOUBLER,LOWER HINGE	1	11
	96-630000-309	. DOUBLER/SPARES REPL FOR 96-630000-307/.	1	11
- 14	96-630000-63	. BULKHEAD,NOSE	1	
- 15	96-630000-61	. BULKHEAD,NOSE	1	
	96-630000-57	. BRACKET,LOWER HINGE	1	1
- 16	96-630000-195	. BRACKET,LOWER HINGE	1	2
	AN502-10-10	. SCREW,HINGE BRACKET	2	
- 17	96-630000-311	. ANGLE	1	11
- 18	R 96-630000-17	. RIB	1	
- 19	96-630000-15	. RIB	1	
- 20	96-630000-81	. RIB	1	
- 21	96-630000-303	. DOUBLER,UPPER HINGE	1	11
	96-630000-305	. DOUBLER/SPARES REPL FOR 96-630000-303/.	1	11
- 22	96-630000-11	. RIB,NOSE.	1	
	96-630000-55	. BRACKET,UPPER HINGE	1	1
- 23	96-630000-193	. BRACKET,UPPER HINGE	1	2
	AN502-10-10	. SCREW,HINGE BRACKET	2	
- 24	96-630000-133	. ANGLE	1	
- 25	96-630000-13	. RIB,RUDDER TOP.	1	
	96-630000-111	. ANGLE,LH.	1	
- 26	96-630000-112	. ANGLE,RH.	1	
	96-630000-9	. CAP,RUDDER.	1	12
- 27	96-630000-275	. WELD ASSY,RUDDER CAP.	1	13
- 28	96-630000-279	. FORMER.	1	13
	96-630000-141	. BULKHEAD.	1	12
- 29	96-630000-277	. BULKHEAD.	1	13
		/ATTACHING PARTS/		
	AN507-832	. SCREW	8	
	AN366F832	. NUTPLATE.	8	

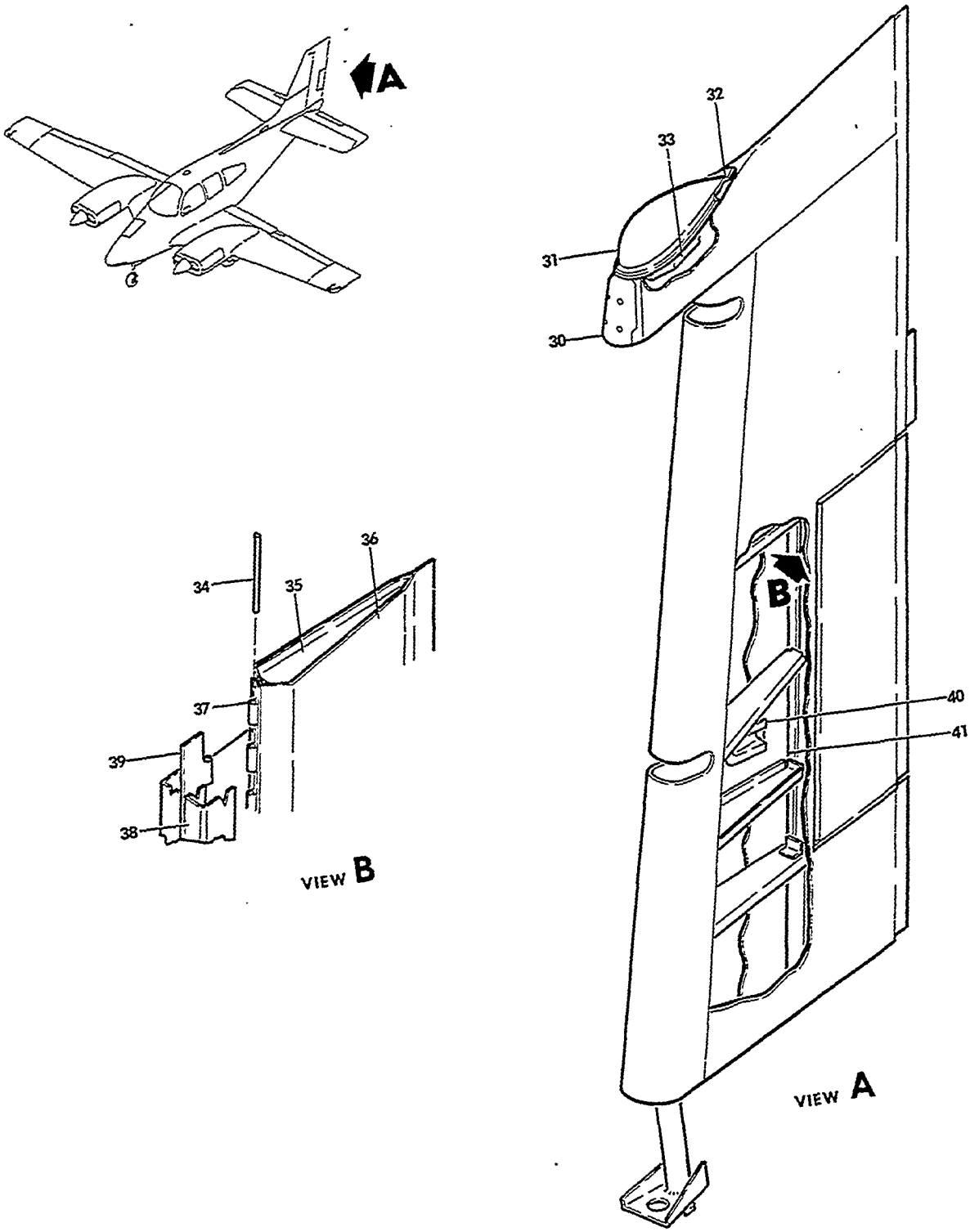

FIGURE 40-01.RUDDER AND TAB ASSEMBLY
/SHEET 2 OF 3 SHEETS/

ATA CODE & INDEX NO.	PART NO.	DESCRIPTION 1 2 3 4 5 6 7	UNITS PER ASSY	USABLE ON CODE
40-01	96-630000-59	. WEIGHT ASSEMBLY	1	14
	96-630000-203	. WEIGHT ASSEMBLY	1	15
	96-630000-271	. WEIGHT ASSEMBLY	1	16
- 30	96-630000-455	. WEIGHT ASSEMBLY	1	17
		/ATTACHING PARTS/		
	NAS221	. SCREW,WEIGHT ASSY INSERT.	4	14
	MS27039-1-24	. SCREW,WEIGHT ASSY UPPER INSERT.	2	18
	MS27039-1-38	. SCREW,WEIGHT ASSY LOWER INSERT.	2	18
	NAS1189-08P8L	. SCREW	6	
	AN960-10	. WASHER,INSERT SCREW	4	
		----*----		
- 31	40-0127-1	. BEACON ASSY,ROTATING/OPTIONAL SEE CHAPTER 33/	1	13
	96-630000-459	. COVER ASSEMBLY,RUDDER CAP/WITHOUT BEACON/ . .	1	13
		/ATTACHING PARTS/		
	AN525-10R8	. SCREW	5	
		----*----		
- 32	96-630000-443	. . COVER,RUDDER CAP.	1	13
- 33	96-630000-457	. . WEIGHT.	1	13
		/ATTACHING PARTS/		
	AN524-10R24	. . SCREW	2	
	AN960-10	. . WASHER.	2	
	100951X050ZM	. . WASHER.	2	
	AN365-1032	. . NUT	2	
		----*----		
	96-630000-71	. TAB ASSEMBLY,RUDDER	1	
		/ATTACHING PARTS/		
- 34	96-630000-89	. PIN,HINGE	1	
		----*----		
- 35	96-630000-39	. . RIB	1	
	96-630000-43	. . HORN ASSEMBLY,RUDDER TAB.	1	
	96-630000-41	. . . HORN,RUDDER TAB	1	
	105740X-ZH0115	. . . BUSHING	1	
- 36	96-630000-31	. . SKIN,RUDDER TAB LH.	1	
	96-630000-32	. . SKIN,RUDDER TAB RH.	1	
- 37	96-630000-87	. . HINGE,TAB SIDE.	1	
- 38	96-630000-117	. CHANNEL,LH.	1	
	96-630000-118	. CHANNEL,RH.	1	
- 39	96-630000-29	. HINGE,RUDDER SIDE	1	
	96-630000-129	. DOOR ASSY,RUDDER TAB ACTUATOR	1	
		/ATTACHING PARTS/		
	AN525-10	. SCREW	10	
		----*----		
- 40	96-630000-127	. . COVER	1	
- 41	96-630000-131	. . DOOR.	1	
	AN960-3	. . WASHER.	9	
	96-526000-601	. ACTUATOR ASSEMBLY,TRIM TAB/SEE CHAPTER 27/. .	1	
		/ATTACHING PARTS/		
	AN173-13/M/	. BOLT.	1	
	96-526000-25	. BUSHING	1	
	AN173-5/M/	. BOLT.	1	
	AN960-10L	. WASHER.	1	
	AN320-3	. NUT	2	
	MS24665-132	. PIN,COTTER.	2	
		----*----		

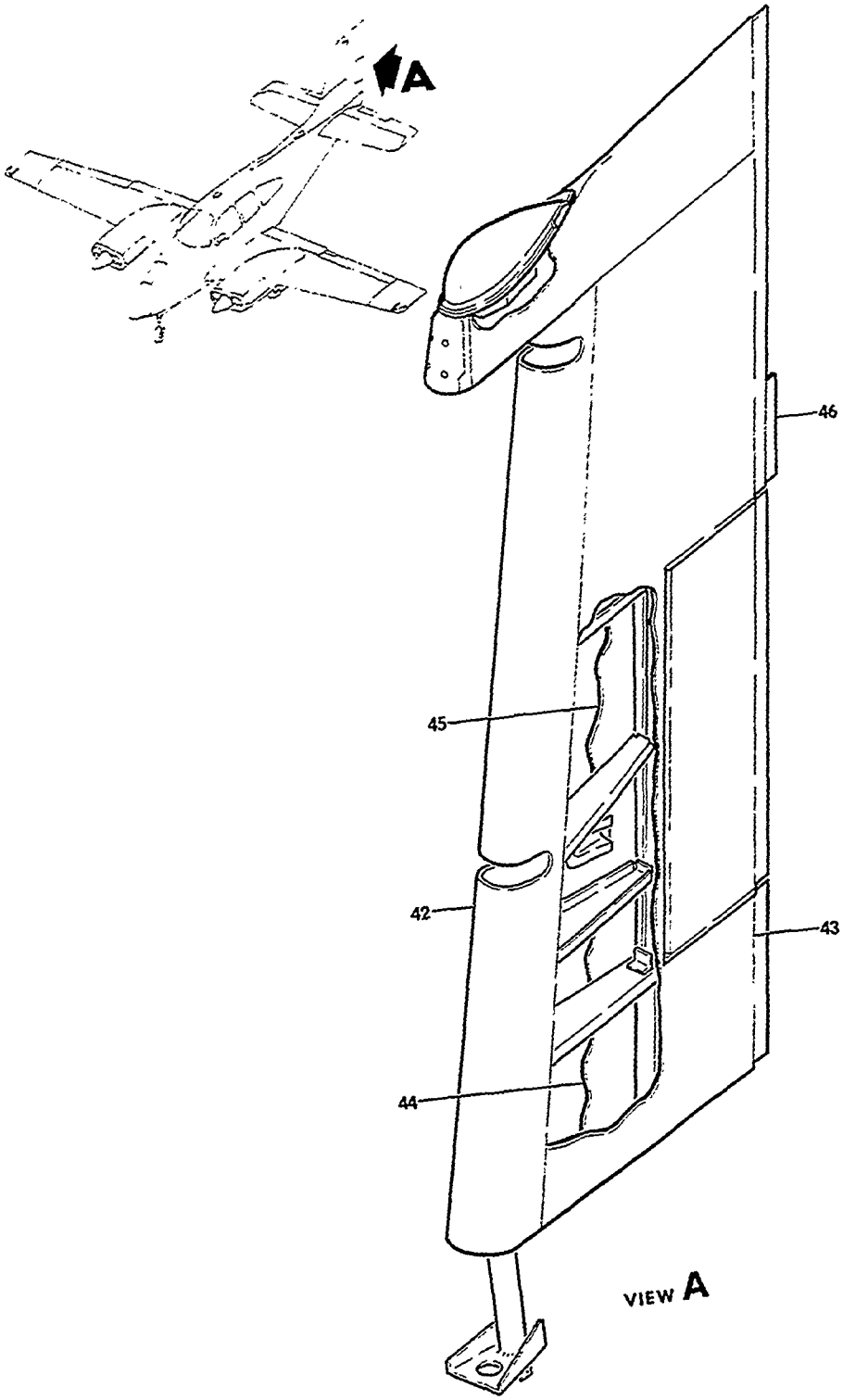

55-132-9

FIGURE 40-01.RUDDER AND TAB ASSEMBLY
/SHEET 3 OF 3 SHEETS/

SUB-SECT UNIT & ITEM NO.	PART NO.	DESCRIPTION 1 2 3 4 5 6 7	UNITS PER ASSY	USABLE ON CODE
40-01	96-526000-19	BRACKET,RUDDER TAB ACTUATOR/SEE CHAPTER 27/ /ATTACHING PARTS/	2	
	AN525-1	SCREW	2	
	AN3-4/M/	BOLT/ALTERNATE FOR AN525-1/	2	
- 42	96-630000-3	SKIN,RUDDER NOSE	1	
- 43	96-630000-67	SKIN,RUDDER SIDE LH	1	
- 44	96-630000-123	SKIN,RUDDER SIDE RH	1	
- 45	96-630000-68	SKIN,RUDDER SIDE RH	1	
- 46	96-630000-143	TAB	1	
	A6914-1024-1	PLATE/RH SIDE ONLY/	1	
	AN742-2	CLAMP,HINGE PIN /ATTACHING PARTS/	1	
	AN520-10	SCREW	1	
	AN960-10	WASHER	1	

CODES OF EFFECTIVITY

1	TC-1 THRU TC-240	2	TC-241 THRU TC-1601
3	TC-1602 THRU TC-1607	4	TE-1 THRU TE-767
5	TE-768 THRU TE-939 EXCEPT TE-938	6	TE-940 THRU TE-942
7	TC-1 THRU TC-1256 TE-1 THRU TE-750	8	TC-1257 THRU TC-1607 TE-751 THRU TE-942 EXCEPT TE-938
9	TE-770 THRU TE-942 EXCEPT TE-938	10	TC-1 THRU TC-1143 TE-1 THRU TE-452
11	TC-1144 THRU TC-1607 TE-453 THRU TE-942 EXCEPT TE-938	12	TC-1 THRU TC-1607 TE-1 THRU TE-769
13	TE-770 THRU TE-942 EXCEPT TE-938	14	TC-1 THRU TC-1607
15	TE-1 THRU TE-451	16	TE-452 THRU TE-767
17	TE-768 THRU TE-942 EXCEPT TE-938	18	TE-1 THRU TE-942 EXCEPT TE-938

CHAPTER 56

WINDOWS

LIST OF PAGES & TABLE OF CONTENTS
FOR
CHAPTER 56-00-00 WINDOWS

CHAP/SUB-SECT & UNIT	PAGE NO.	EFFECTIVE DATE	TABLE OF CONTENTS
56-00-00	1	04/05/85	LIST OF PAGES & TABLE OF CONTENTS
56-10-01	1	03/10/78	WINDSHIELD AND WINDOWS
56-10-01	2	03/10/78	TC-1 THRU TC-1042,TE-1 THRU TE-451
56-10-01	3	03/10/78	
56-10-01	4	03/10/78	
56-10-01	5	03/10/78	
56-10-10	1	04/05/85	WINDSHIELD AND WINDOWS
56-10-10	2	03/10/78	TC-1043 THRU TC-1607
56-10-10	3	04/05/85	TE-452 THRU TE-942 EXCEPT TE-938
56-10-10	4	03/10/78	
56-10-10	5	03/10/78	
56-10-10	6	03/10/78	
56-10-10	7	03/10/78	
56-20-01	1	03/10/78	WINDOW INSTALLATION AFT
56-20-01	2	03/10/78	
56-20-01	3	03/10/78	
56-20-01	4	03/10/78	
56-20-01	5	03/10/78	
56-30-01	1	04/05/85	CABIN DOOR WINDOW/REFERENCE/

56-10-01
WINDSHIELD AND WINDOWS
TC-1 THRU TC-1042,TE-1 THRU TE-451

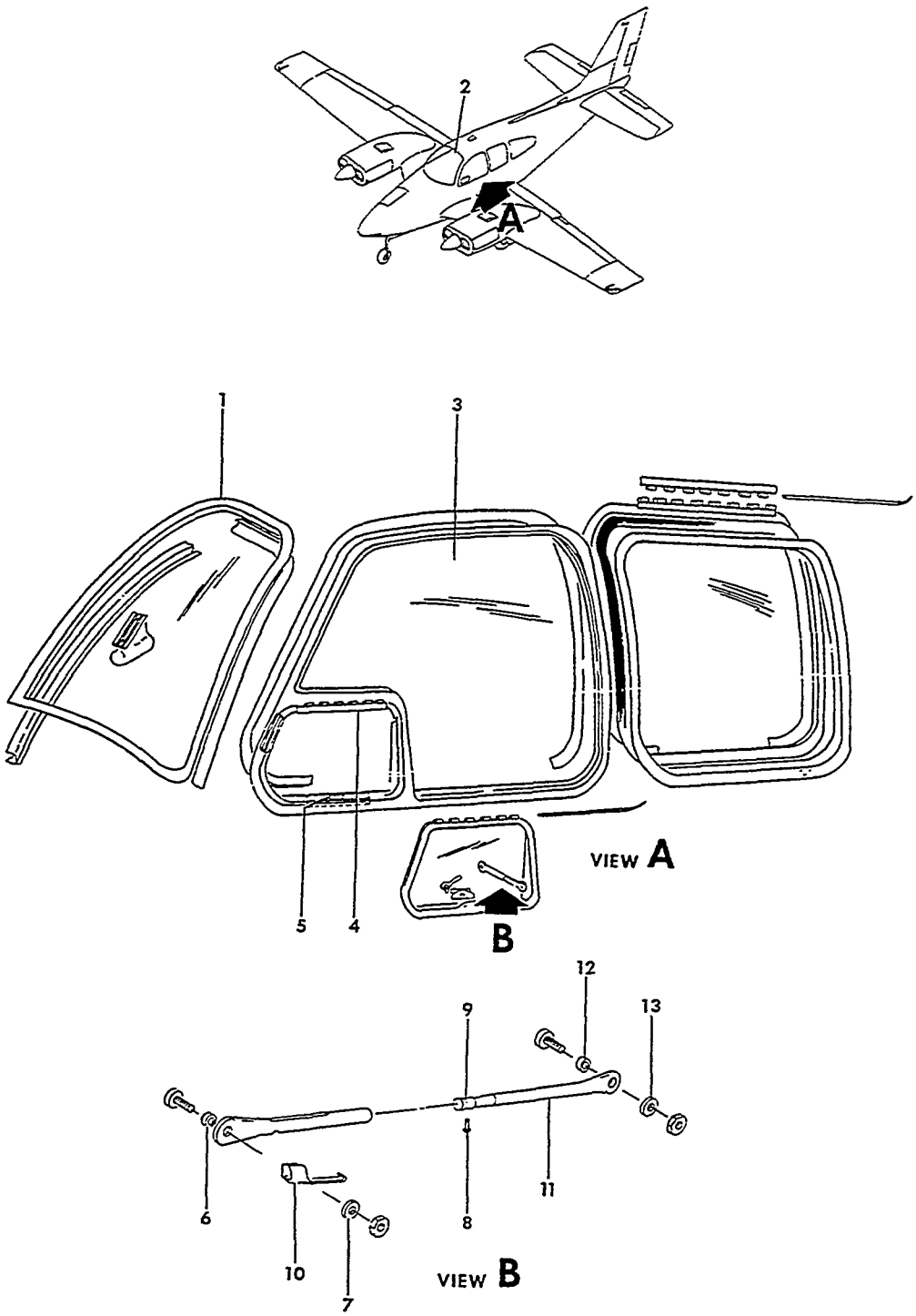

FIGURE 10-01.WINDSHIELD AND WINDOWS
/SHEET 1 OF 2 SHEETS/

ATA CODE & INDEX NO.	PART NO.	DESCRIPTION 1 2 3 4 5 6 7	UNITS PER ASSY	USABLE ON CODE
10-01	95-410032-1	WINDOW INSTL,CABIN/THIN GLASS CLEAR/.	NP	1
	95-410032-3	WINDOW INSTL,CABIN/THICK GLASS CLEAR/	NP	1
	35-410291-199	WINDOW INSTL,CABIN/ONE PIECE WINDSHIELD TINTED/	NP	2
	35-410291-201	WINDOW INSTL,CABIN/ONE PIECE WINDSHIELD CLEAR/.	NP	2
- 1	35-410291-8	. WINDSHIELD ASSY,LH/.156 THICK CLEAR/.	1	1
	35-410291-164	. WINDSHIELD ASSY,LH/.250 THICK CLEAR/.	1	1
	35-410291-231	. WINDSHIELD ASSY,LH/.156 THICK TINTED/	1	1
	35-410291-11	. WINDSHIELD ASSY,RH/.156 THICK CLEAR/.	1	1
	35-410291-165	. WINDSHIELD ASSY,RH/.250 THICK CLEAR/.	1	1
	35-410291-232	. WINDSHIELD ASSY,RH/.156 THCIK TINTED/	1	1
- 2	35-410474-75	. WINDSHIELD ASSY/ONE PIECE TINTED/ . . . . . SUPERSEDES 35-410474-29 & -57/	1	2
	35-410474-59	. WINDSHIELD ASSY/ONE PIECE CLEAR/. . . . . SUPERSEDES 35-410474-31/	1	2
- 3	35-410291-4	. WINDOW ASSY,PILOT FWD LH/1/8 INCH CLEAR/. . .	1	3
	35-410291-132	. WINDOW ASSY,PILOT FWD LH/1/8 INCH TINTED/ . .	1	4
	96-420011-3	. WINDOW ASSY,PILOT FWD LH/1/4 INCH TINTED/ . .	1	5
- 4	35-410291-88	. . HINGE,WINDOW HALF	1	5
- 5	35-410318	. . STRIKE,STORM WINDOW	1	3
	35-410465-1	. . STRIKE,STORM WINDOW/SUPERSEDES 35-410465/ .	1	4
	35-410324	. . SLEEVE ASSY,STORM WINDOW. . . . . /ATTACHING PARTS/	1	5
	AN526-832R7	. . SCREW	1	
- 6	102933S4ZP0159	. . SPACER.	1	
- 7	100801X2-0062	. . BUSHING	1	
- 8	102809A093-011	. . PIN	1	
	AN960-8L	. . WASHER.	1	
	22K1-82	. . NUT	1	
- 9	35-410324-2	. . . SLEEVE.	1	5
- 10	35-410324-4	. . . SPRING.	1	5
- 11	35-410325	. . ROD,STORM WINDOW. . . . . /ATTACHING PARTS/	1	5
	AN526-832R7	. . SCREW	1	
- 12	102933S4ZP0140	. . SPACER.	1	
- 13	100801X2-0097	. . BUSHING	1	
	AN960-8L	. . WASHER.	1	
	22K1-82	. . NUT	1	

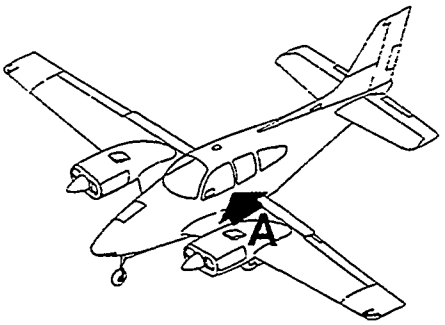

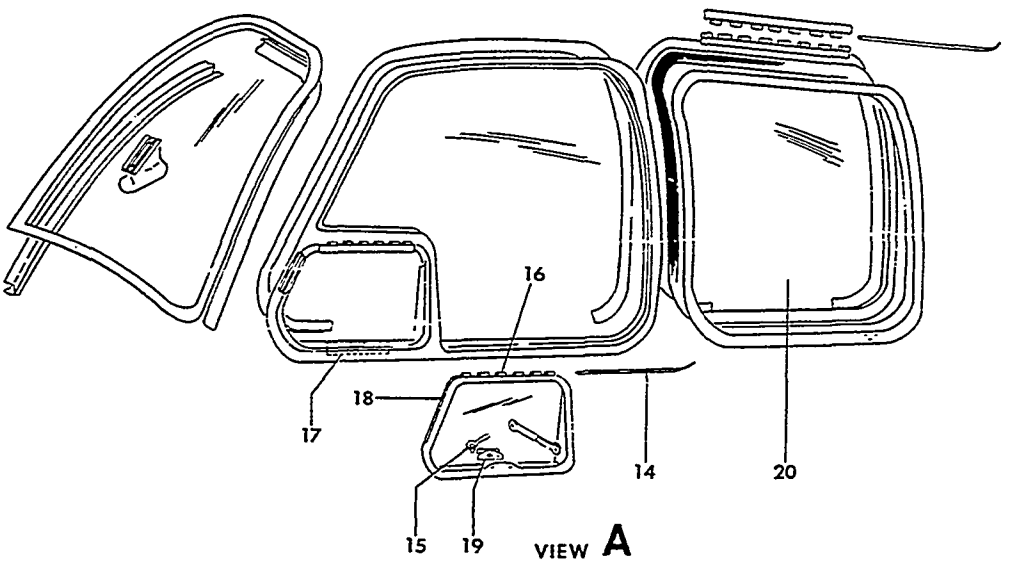

55-110-22

FIGURE 10-01.WINDSHIELD AND WINDOWS
/SHEET 2 OF 2 SHEETS/

ATA CODE & INDEX NO.	PART NO.	DESCRIPTION 1 2 3 4 5 6 7	UNITS PER ASSY	USABLE ON CODE
10-01	35-410291-96	. WINDOW ASSY,STORM/1/8 INCH CLEAR/	1	3
	35-410291-136	. WINDOW ASSY,STORM/1/8 INCH TINTED/.	1	4
	96-420011-7	. WINDOW ASSY,STORM/1/4 INCH TINTED/. . . . . /ATTACHING PARTS/	1	5
- 14	105774C-2A00808	. PIN,HINGE	1	
		——*——		
- 15	35-410321-7	. . LATCH ASSY,STORM WINDOW . . . . . /SUPERSEDES 35-410321-1/	1	5
- 16	35-410291-90	. . HINGE,STORM WINDOW HALF	1	5
- 17	35-410291-193	. STRIP,STORM WINDOW STRIKER BRACE.	1	5
- 18	35-410291-189	. SEAL,STORM WINDOW	1	5
- 19	35-410291-142	. SHIM.	4	5
- 20	35-410291-146	. WINDOW ASSY,CABIN REAR LH/STANDARD GLASS/ . . /SEE CHAPTER 52-20-01/	1	5
	35-410291-147	. WINDOW ASSY,CABIN REAR RH/STANDARD GLASS/ . . /SEE CHAPTER 52-20-01/	1	5
	96-420011-11	. WINDOW ASSY,CABIN REAR LH/THICK GLASS/. . . . /SEE CHAPTER 52-20-01/	1	5
	96-420011-12	. WINDOW ASSY,CABIN REAR RH/THICK GLASS . . . . /SEE CHAPTER 52-20-01/	1	5

NOTE FOR WINDSHIELD AND WINDOW MOULDINGS
SEE CHAPTER 25-23-01

CODES OF EFFECTIVITY

1 TC-1 THRU TC-954
2 TC-955 THRU TC-1042
TE-1 THRU TE-451
3 TC-1 THRU TC-323
4 TC-324 THRU TC-1042
TE-1 THRU TE-451
5 TC-1 THRU TC-1042
TE-1 THRU TE-451

"END"

56-10-10
WINDSHIELD AND WINDOWS
TC-1043 THRU TC-1607
TE-452 THRU TE-942 EXCEPT TE-938

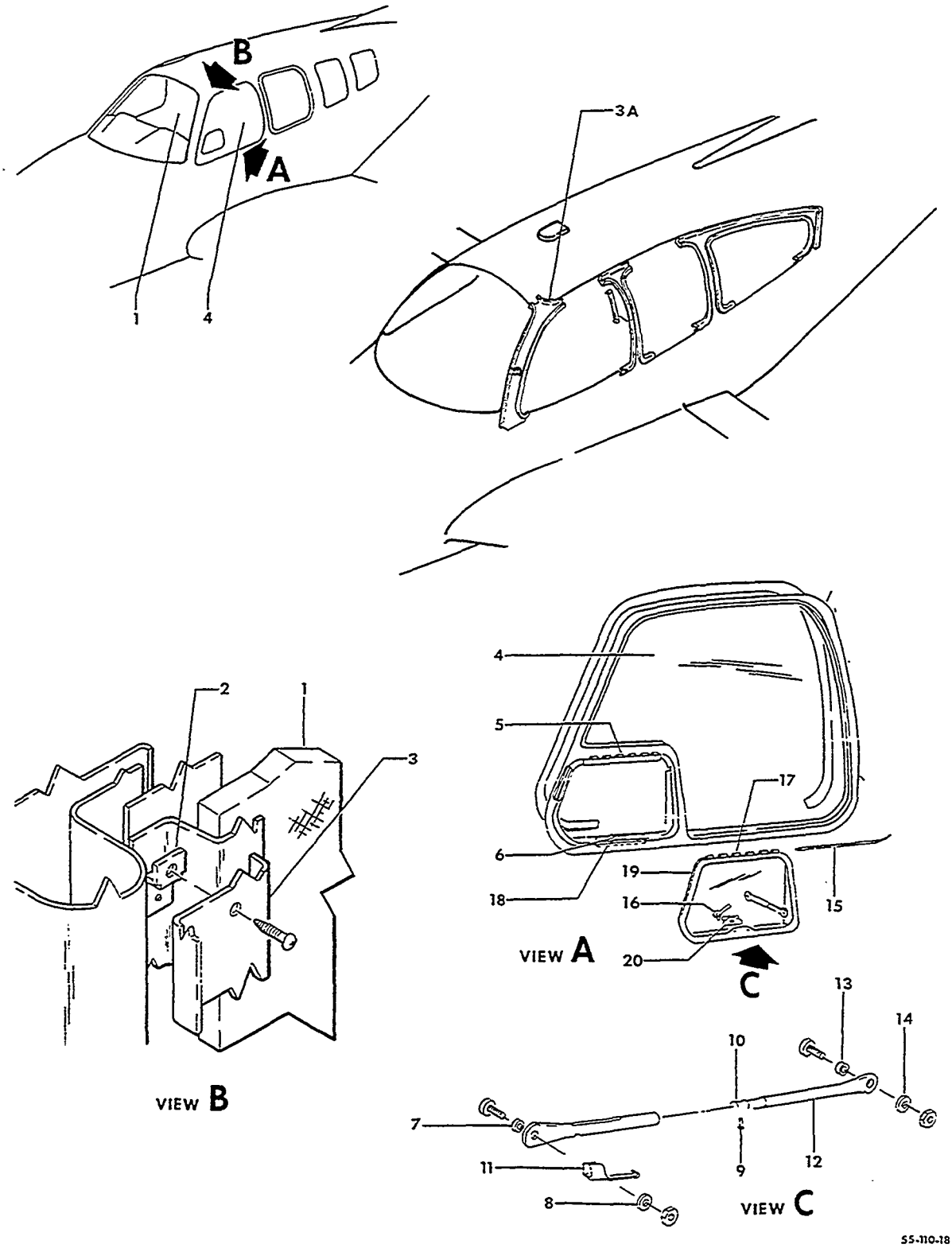

FIGURE 10-10.WINDSHIELD AND WINDOWS
/SHEET 1 OF 3 SHEETS/

SUB-SECT UNIT & ITEM NO.	PART NO.	DESCRIPTION 1 2 3 4 5 6 7	UNITS PER ASSY	USABLE ON CODE
10-10	35-410291-203	WINDOW INSTL,CABIN/TINTED/.	NP	1
	35-410291-205	WINDOW INSTL,CABIN/CLEAR/	NP	1
	35-410291-207	WINDOW INSTL,CABIN/TINTED/.	NP	2
	35-410291-209	WINDOW INSTL,CABIN/CLEAR/	NP	2
	35-410291-211	WINDOW INSTL,CABIN/OPTIONAL THICK GLASS/. . . .	NP	2
	96-420030-1	. WINDSHIELD INSTL/TINTED/.	NP	3
	96-420030-3	. WINDSHIELD INSTL/CLEAR/	NP	3
- 1	96-420029-1	. . WINDSHIELD ASSY/ONE PIECE TINTED/	1	3
	96-420029-3	. . WINDSHIELD ASSY/ONE PIECE CLEAR/.	1	3
- 2	35-410315	. . CLIP.	15	4
	576	. . SEALER,PRESTITE	AR	3
- 3 R	35-410474-49	. . MOULDING,LH	1	4
	35-410474-50	. . MOULDING,RH	1	4
	58-530085-1	. MOULDING INSTL,CANOPY POST RH FWD	NP	5
	58-530085-3	. . MOULDING,CANOPY POST RH FWD	1	5
	58-530086-1	. MOULDING INSTL,CANOPY POST LH FWD	NP	5
- 3A	58-530086-3	. . MOULDING,CANOPY POST LH FWD	1	5
		/ATTACHING PARTS/		
	PK84XA4-4	. . SCREW	AR	4
	AN960-10	. . WASHER.	AR	4
	NAS387-632-12P	. . SCREW	3	5
	NAS391-6P	. . WASHER.	3	5
	NAS1329A06-75	. . RIVNUT.	3	5
		——+——		
	58-530086-5	. . PLATE	1	5
- 4	35-410291-132	. WINDOW ASSY,PILOT FWD LH/1/8 INCH TINTED/ . .	1	1
	96-420011-3	. WINDOW ASSY,PILOT FWD LH/1/4 INCH TINTED/ . .	1	1
- 5	35-410291-88	. . HINGE,WINDOW HALF	1	1
- 6	35-410465-1	. . STRIKE,STORM WINDOW/SUPERSEDES 35-410465/ .	1	1
	35-410324	. . SLEEVE ASSY,STORM WINDOW.	1	1
		/ATTACHING PARTS/		
	AN526-832R7	. . SCREW	1	
- 7	102933S4ZP0159	. . SPACER.	1	
- 8	100801X2-0062	. . BUSHING	1	
- 9	102809A093-011	. . PIN	1	
	AN960-8L	. . WASHER.	1	
	22K1-82	. . NUT	1	
		——+——		
- 10	35-410324-2	. . . SLEEVE.	1	1
- 11	35-410324-4	. . . SPRING.	1	1
- 12	35-410325	. . ROD,STORM WINDOW.	1	1
		/ATTACHING PARTS/		
	AN526-832R7	. . SCREW	1	
- 13	102933S4ZP0140	. . SPACER.	1	
- 14	100801X2-0097	. . BUSHING	1	
	AN960-8L	. . WASHER.	1	
	22K1-82	. . NUT	1	
		——+——		
	35-410291-136	. WINDOW ASSY,STORM/1/8 INCH TINTED/.	1	1
	96-420011-7	. WINDOW ASSY,STORM/1/4 INCH TINTED/.	1	1
		/ATTACHING PARTS/		
- 15	35-410291-118	. PIN,HINGE	1	
		——+——		
- 16	35-410321-7	. . LATCH ASSY,STORM WINDOW	1	1
		/SUPERSEDES 35-410321-1/		
- 17	35-410291-90	. . HINGE,STORM WINDOW HALF	1	1
- 18	35-410291-193	. STRIP,STORM WINDOW STRIKER BRACE.	1	1
- 19	35-410291-189	. SEAL,STORM WINDOW	1	1
- 20	35-410291-142	. SHIM.	4	1

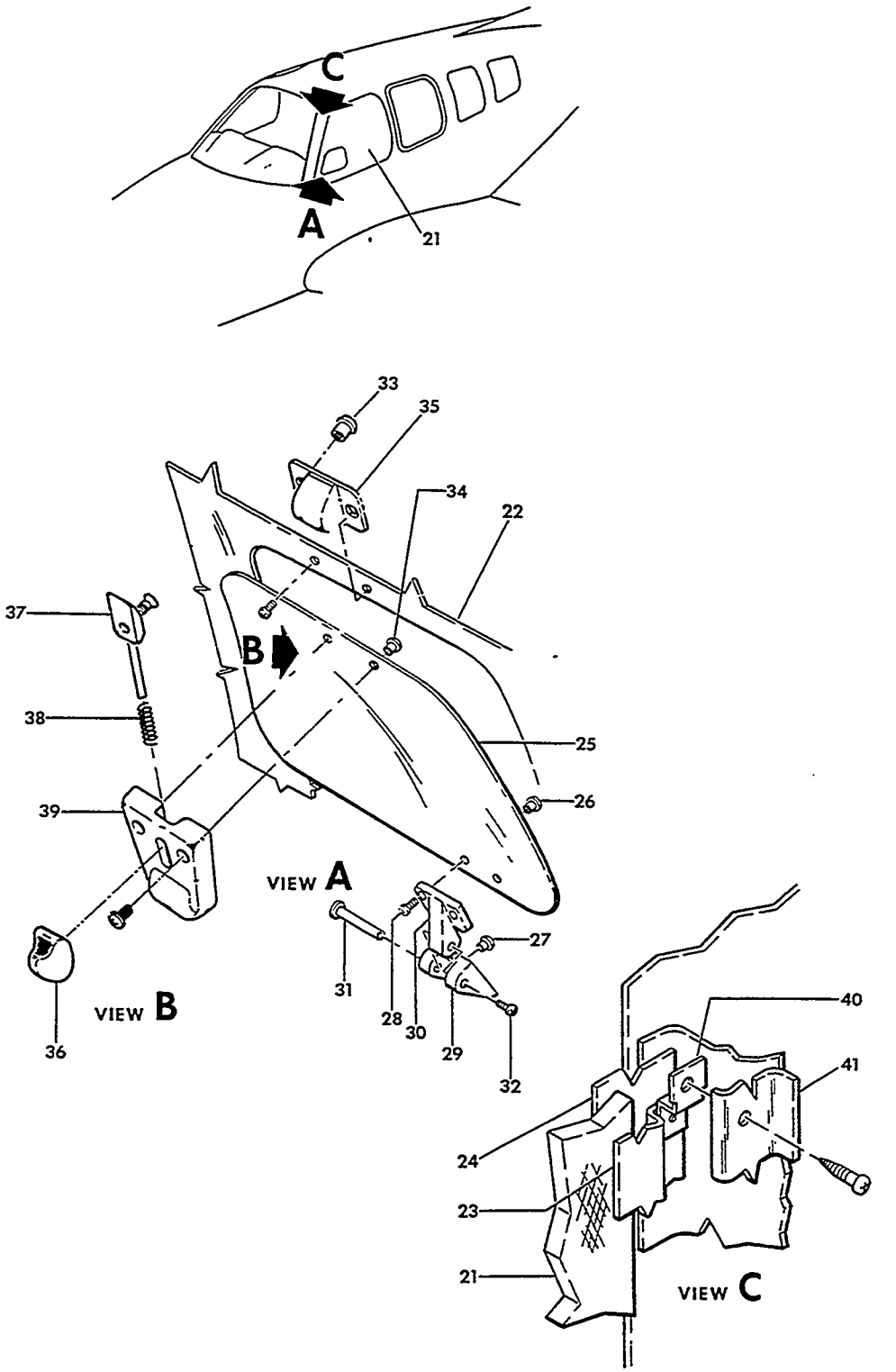

FIGURE 10-10.WINDSHIELD AND WINDOWS
/SHEET 2 OF 3 SHEETS/

ATA CODE & INDEX NO.	PART NO.	DESCRIPTION 1 2 3 4 5 6 7	UNITS PER ASSY	USABLE ON CODE
10-10 - 21	35-410291-221	. WINDOW ASSY,PILOT FWD LH/TINTED/.	1	2
	35-410291-229	. . SPOTWELD ASSY,PILOT WINDOW.	1	2
- 22	35-410291-217	. . . WINDOW,CABIN FWD LH	1	2
- 23	35-410291-213	. . . FRAME,WINDOW.	1	2
- 24	35-410291-215	. . . RETAINER.	1	2
- 25	35-410291-219	. . WINDOW,STORM.	1	2
	96-420105-1	. . HINGE ASSY,STORM WINDOW	2	2
		/ATTACHING PARTS/		
- 26	D4023X1/2	. . NUT,POST.	2	
- 27	D4023X3/8	. . NUT,POST.	2	
- 28	D366	. . SCREW	4	
	RTV108	. . SEALANT,ADHESIVE.	AR	
		----*----		
- 29	96-420105-3	. . . HINGE,WINDOW HALF	1	2
- 30	96-420105-5	. . . HINGE,STORM WINDOW HALF	1	2
- 31	D4023X1 1/4	. . . NUT,POST.	1	2
- 32	D366	. . . SCREW	1	2
	35-410291-235	. . SEAL,STORM WINDOW	1	2
	35-410291-243	. . LATCH SET,STORM WINDOW.	1	2
		/ATTACHING PARTS/		
- 33	D4023X3/8	. . NUT,POST/STRIKER.	2	
- 34	D4023X5/8	. . NUT,POST/COVER/	2	
	D366	. . SCREW	4	
		----*----		
- 35	58-420063-1	. . . STRIKER	1	2
- 36	58-420062-1	. . . KNOB ASSY	1	2
- 37	58-420064-1	. . . CATCH	1	2
- 38	100943CR-ZD028L	. . . SPRING.	1	2
- 39	58-420065-3	. . . COVER	1	2
- 40	35-410315	. CLIP,WINDOW MOULDING.	16	4
- 41	35-410291-175	. MOULDING,PILOTS FWD LH WINDOW	1	4

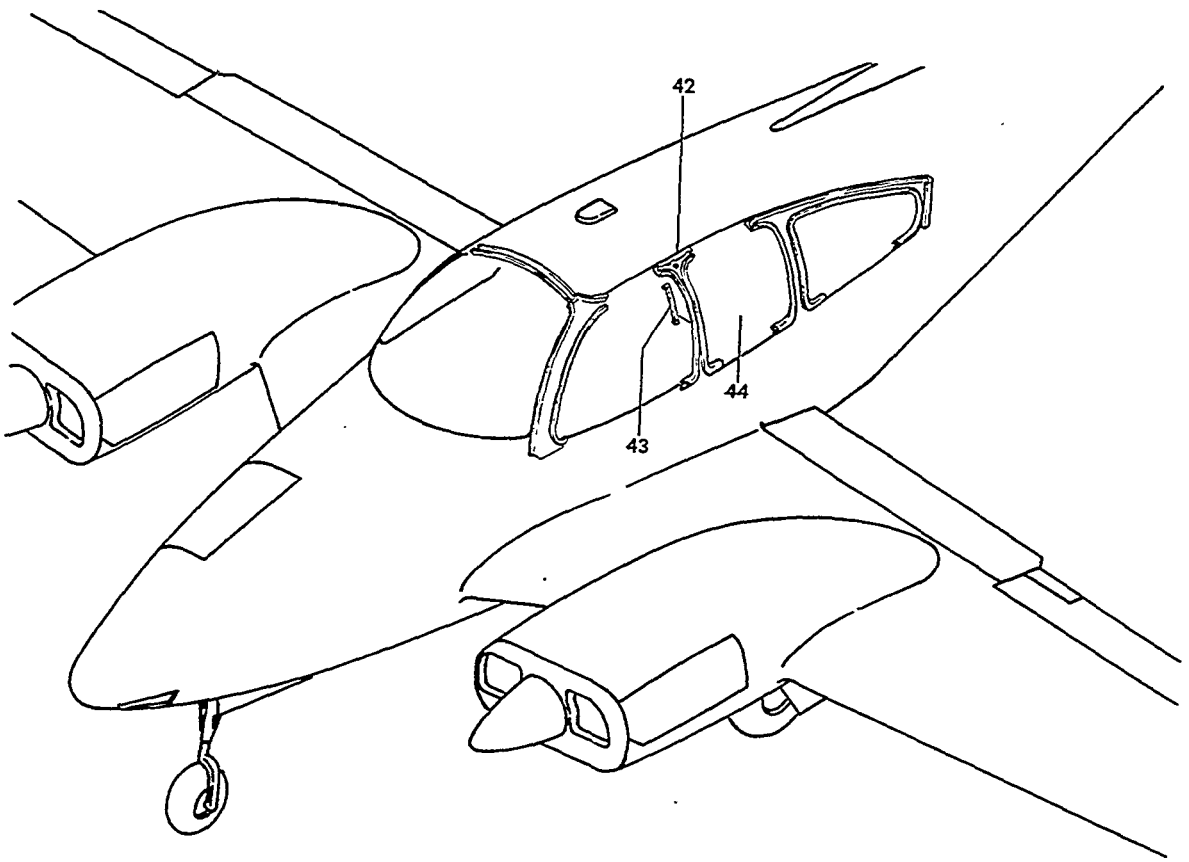

55-110-20

FIGURE 10-10.WINDSHIELD AND WINDOWS
/SHEET 3 OF 3 SHEETS/

ATA CODE & INDEX NO.	PART NO.	DESCRIPTION 1 2 3 4 5 6 7	UNITS PER ASSY	USABLE ON CODE
10-10	58-530087-1	. MOULDING INSTL,CANOPY POST LH CENTER.	NP	5
- 42	58-530087-3	. . MOULDING ASSY	1	5
		/ATTACHING PARTS/		
	NAS387-1032-16P	. . SCREW	3	
	58-530087-7	. . SPACER.	2	
	58-530087-9	. . SPACER.	1	
	NAS1329A3-80	. . RIVNUT.	3	
		——+——		
	58-530087-5	. . . MOULDING.	1	5
- 43	58-530134-11	. . . HANDLE/SUPERSEDES 34CB759/.	1	5
	7756415	. . . HOOK/SUPERSEDES 4601476/.	1	5
	58-530088-1	. MOULDING INSTL,CANOPY POST RH CENTER.	NP	5
	58-530088-3	. . MOULDING ASSY	1	5
		/ATTACHING PARTS/		
	NAS387-1032-16P	. . SCREW	3	
	NAS1329A3-80	. . RIVNUT.	3	
		——+——		
	58-530088-5	. . . MOULDING.	1	5
	58-530088-7	. . . SPACER.	1	5
	58-530134-11	. . . HANDLE/SUPERSEDES 34CB759/.	1	5
	7756415	. . . HOOK/SUPERSEDES 4601476/.	1	5
- 44	35-410291-146	. WINDOW ASSY,CABIN REAR LH/STD GLASS	1	3
		SEE CHAPTER 52-20-01/		
	35-410291-147	. WINDOW ASSY,CABIN REAR RH/STD GLASS	1	3
		SEE CHAPTER 52-20-01/		
	96-420011-11	. WINDOW ASSY,CABIN REAR LH/THICK GLASS	1	3
		SEE CHAPTER 52-20-01/		
	96-420011-12	. WINDOW ASSY,CABIN REAR RH/THICK GLASS	1	3
		SEE CHAPTER 52-20-01/		

CODES OF EFFECTIVITY

1 TC-1043 THRU TC-1298
EXCEPT TC-1259
TE-452 THRU TE-767
EXCEPT TE-733

2 TC-1259 AND
TC-1299 THRU TC-1607
TE-733 AND
TE-768 THRU TE-942
EXCEPT TE-938

3 TC-1043 THRU TC-1607
TE-452 THRU TE-942
EXCEPT TE-938

4 TC-1043 THRU TC-1402
TE-452 THRU TE-846

5 TC-1403 THRU TC-1607
TE-847 THRU TE-942
EXCEPT TE-938

"END"

56-20-01
WINDOW INSTALLATION AFT

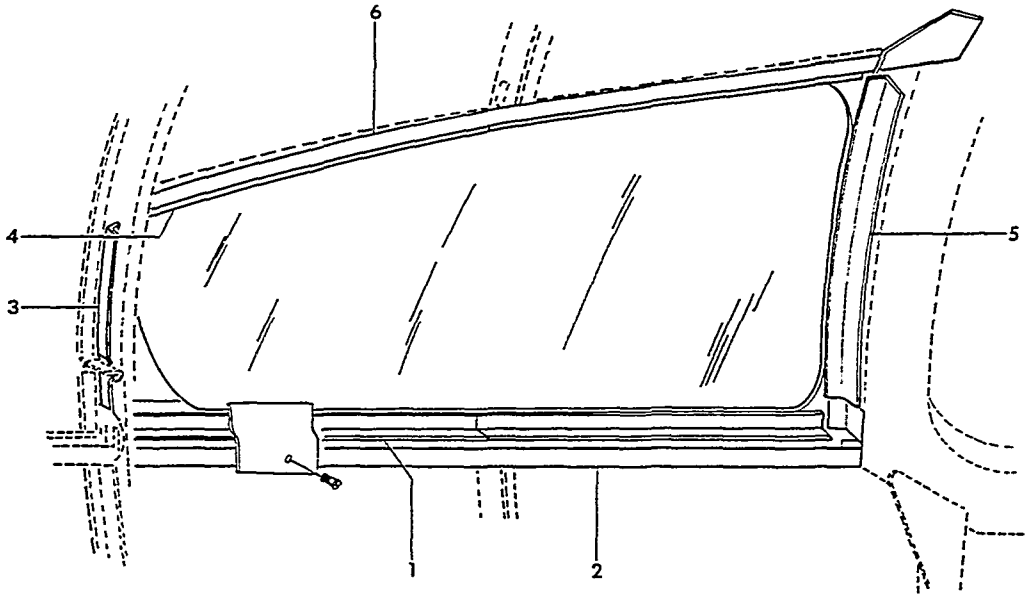

55-110-23

FIGURE 20-01.WINDOW INSTALLATION AFT
/SHEET 1 OF 2 SHEETS/

ATA CODE & INDEX NO.	PART NO.	DESCRIPTION 1 2 3 4 5 6 7	UNITS PER ASSY	USABLE ON CODE
20-01	96-430010	WINDOW INSTL,AFT/THIN GLASS EXTENDED BAGGAGE/ .	NP	1
	96-430010-69	WINDOW INSTL,AFT/THICK GLASS EXTENDED BAGGAGE/.	NP	1
	96-430010-79	WINDOW INSTL,AFT/THIN GLASS LESS EXTENDED . . . BAGGAGE/	NP	1
	96-430010-81	WINDOW INSTL,AFT/THICK GLASS LESS EXTENDED. . . BAGGAGE/	NP	1
- 1	96-430010-17	. ANGLE,LH WINDOW FRAME LOWER	1	1
	96-430010-18	. ANGLE,RH WINDOW FRAME LOWER . . . . . /ATTACHING PARTS/	1	1
	AN530-8	. SCREW	10	
		——*——		
- 2	96-430010-31	. ZEE,LH/WITH EXTENDED BAGGAGE/	1	1
	96-430010-77	. ZEE,LH/LESS EXTENDED BAGGAGE/	1	1
	96-430010-5	. ZEE,RH/WITH EXTENDED BAGGAGE/	1	1
	96-430010-75	. ZEE,RH/LESS EXTENDED BAGGAGE/	1	1
- 3	96-430010-15	. ANGLE,LH WINDOW FRAME AFT	1	1
	96-430010-16	. ANGLE,RH WINDOW FRAME AFT . . . . . /ATTACHING PARTS/	1	1
	AN530-8	. SCREW	3	
		——*——		
- 4	96-430010-21	. ANGLE,LH WINDOW FRAME UPPER	1	1
	96-430010-22	. ANGLE,RH WINDOW FRAME UPPER . . . . . /ATTACHING PARTS/	1	1
	AN530-8	. SCREW	10	
		——*——		
- 5	96-430010-27	. ANGLE,LH WINDOW FRAME FWD	1	1
	96-430010-28	. ANGLE,RH WINDOW FRAME FWD . . . . . /ATTACHING PARTS/	1	1
	AN530-8	. SCREW	6	
		——*——		
- 6	96-430010-3	. ZEE,LH.	1	1
	96-430010-4	. ZEE,RH.	1	1
	96-430010-37	. STRINGER,LH AFT	1	1
	96-430010-38	. STRINGER,RH AFT	1	1
	35-115276	. CLIP,LH AFT	1	1
	35-115276-1	. CLIP,RH AFT	1	1
	108424-2	. CLIP/LH ONLY/	1	1
	96-430010-73	. ANGLE/RH ONLY/.	1	1
	96-430010-47	. ANGLE/2 LH & 2 RH/.	2	1

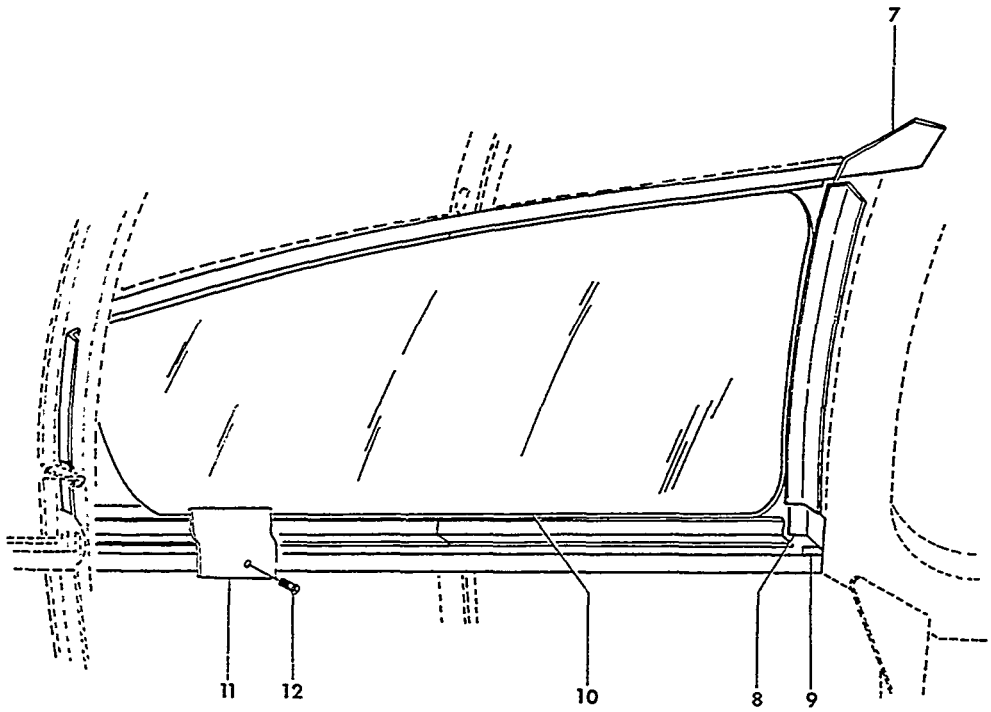

55-110-24

FIGURE 20-01.WINDOW INSTALLATION AFT
/SHEET 2 OF 2 SHEETS/

ATA CODE & INDEX NO.	PART NO.	DESCRIPTION 1 2 3 4 5 6 7	UNITS PER ASSY	USABLE ON CODE
20-01 - 7	96-430010-53	. GUSSET,AFT WINDOW/LH & RH/.	1	1
- 8	96-430010-35	. ZEE/LH ONLY/.	1	1
- 9	96-430010-51	. CHANNEL/RH ONLY/.	1	1
- 10	96-430010-11	. GLASS,LH AFT WINDOW TINTED/THIN STANDARD/ . .	1	1
	96-430010-67	. GLASS,LH AFT WINDOW TINTED/THICK OPTIONAL/. .	1	1
	96-430010-12	. GLASS,RH AFT WINDOW TINTED/THIN STANDARD/ . .	1	1
	96-430010-89	. GLASS,RH AFT WINDOW TINTED/THICK OPTIONAL,. . SUPERSEDES 96-430010-68/	1	1
- 11	95-420015-93	. MOULDING,LH AFT WINDOW/THIN GLASS STANDARD/ .	1	2
	96-430010-71	. MOULDING,LH AFT WINDOW/THICK GLASS OPTIONAL/.	1	2
	95-420015-94	. MOULDING,RH AFT WINDOW/THIN GLASS STANDARD/ .	1	2
	96-430010-72	. MOULDING,RH AFT WINDOW/THICK GLASS OPTIONAL/. /ATTACHING PARTS/	1	2
- 12	NAS384-6-8P	. SCREW	AR	
	NAS384-6-12P	. SCREW	AR	
	NAS391-6P	. WASHER.	AR	
	100696A-ZF008	. SPACER.	AR	
	100696D-ZF008	. SPACER.	AR	
		——+——		
	35-534456-1	MOULDING INSTL,LH AFT WINDOW.	NP	3
	35-534456-2	MOULDING INSTL,RH AFT WINDOW.	NP	3
	35-534456-3	. MOULDING ASSY,LH AFT WINDOW	1	3
	35-534456-4	. MOULDING ASSY,RH AFT WINDOW . . . . . /ATTACHING PARTS/	1	3
	NAS387-1032-16P	. SCREW	2	
	NAS384-6-10P	. SCREW	4	
	NAS1329A3-80	. RIVNUT.	2	
		——+——		
	35-534456-5	. . MOULDING,LH	1	3
	35-534456-6	. . MOULDING,RH	1	3
	58-530090-7	. . SPACER.	2	3
	35-534460-1	. CLIP.	4	3

CODES OF EFFECTIVITY

1 TC-1 THRU TC-1607
TE-1 THRU TE-942
EXCEPT TE-938

2 TC-1 THRU TC-1402
TE-1 THRU TE-846

3 TC-1403 THRU TC-1607
TE-847 THRU TE-942
EXCEPT TE-938

"END"

56-30-01
CABIN DOOR WINDOW/REFERENCE/
FOR CABIN DOOR WINDOW SEE CHAPTER 52

CHAPTER 57

WINGS

LIST OF PAGES & TABLE OF CONTENTS
FOR
CHAPTER 57-00-00 WINGS

CHAP/SUB-SECT & UNIT	PAGE NO.	EFFECTIVE DATE	TABLE OF CONTENTS
57-00-00	1	04/05/85	LIST OF PAGES & TABLE OF CONTENTS
57-00-00	2	04/05/85	
57-00-00	3	04/05/85	
57-10-01	1	03/10/78	WING ASSEMBLY/COMPLETE/
57-10-01	2	03/10/78	
57-10-01	3	04/05/85	
57-10-01	4	03/10/78	
57-10-01	5	04/05/85	
57-10-01	6	03/10/78	
57-10-01	7	04/05/85	
57-10-01	8	03/10/78	
57-10-01	9	03/10/78	
57-10-10	1	03/10/78	WING SECTION ASSY
57-10-10	2	03/10/78	
57-10-10	3	03/10/78	
57-10-10	4	03/10/78	
57-10-10	5	03/10/78	
57-10-10	6	03/10/78	
57-10-10	7	03/10/78	
57-10-10	8	03/10/78	
57-10-10	9	03/10/78	
57-10-10	10	03/10/78	
57-10-10	11	03/10/78	
57-10-10	12	03/10/78	
57-10-10	13	03/10/78	
57-10-10	14	03/10/78	
57-10-10	15	03/10/78	
57-10-10	16	03/10/78	
57-10-10	17	03/10/78	
57-10-10	18	03/10/78	
57-10-10	19	03/10/78	
57-10-10	20	03/10/78	
57-10-10	21	03/10/78	
57-10-20	1	03/10/78	WING FRONT SPAR
57-10-20	2	03/10/78	TC-1 THRU TC-1442
57-10-20	3	03/10/78	TE-1 THRU TE-862
57-10-20	4	03/10/78	
57-10-20	5	03/10/78	
57-10-20	6	03/10/78	
57-10-20	7	03/10/78	
57-10-21	1	03/10/78	WING FRONT SPAR
57-10-21	2	03/10/78	TC-1443 THRU TC-1607
57-10-21	3	03/10/78	TE-863 THRU TE-942 EXCEPT TE-938
57-10-21	4	03/10/78	
57-10-21	5	04/05/85	
57-10-30	1	03/10/78	WING REAR SPAR
57-10-30	2	03/10/78	
57-10-30	3	03/10/78	
57-10-30	4	03/10/78	
57-10-30	5	03/10/78	
57-20-01	1	03/10/78	LEADING EDGE AND FRONT SPAR ASSEMBLY
57-20-01	2	03/10/78	
57-20-01	3	04/05/85	
57-20-01	4	03/10/78	
57-20-01	5	03/10/78	

LIST OF PAGES & TABLE OF CONTENTS
FOR
CHAPTER 57-00-00 WINGS

CHAP/SUB-SECT & UNIT	PAGE NO.	EFFECTIVE DATE	TABLE OF CONTENTS
57-20-05	1	03/10/78.	WING INBOARD LEADING EDGE . . . . .
57-20-05	2	03/10/78	TC-1 THRU TC-399
57-20-05	3	03/10/78	
57-20-05	4	03/10/78	
57-20-05	5	03/10/78	
57-20-05	6	03/10/78	
57-20-05	7	03/10/78	
57-20-05	8	03/10/78	
57-20-05	9	03/10/78	
57-20-06	1	03/10/78.	WING INBOARD LEADING EDGE . . . . .
57-20-06	2	03/10/78	TC-400 THRU TC-1607
57-20-06	3	03/10/78	TE-1 THRU TE-942 EXCEPT TE-938
57-20-06	4	03/10/78	
57-20-06	5	03/10/78	
57-20-06	6	03/10/78	
57-20-06	7	03/10/78	
57-20-06	8	03/10/78	
57-20-06	9	03/10/78	
57-20-06	10	03/10/78	
57-20-06	11	03/10/78	
57-20-06	12	03/10/78	
57-20-06	13	03/10/78	
57-20-10	1	03/10/78.	WING OUTBOARD LEADING EDGE/WITH FUEL/ . . . . .
57-20-10	2	03/10/78	TC-1 THRU TC-399
57-20-10	3	04/05/85	
57-20-10	4	03/10/78	
57-20-10	5	03/10/78	
57-20-10	6	03/10/78	
57-20-10	7	03/10/78	
57-20-10	8	03/10/78	
57-20-10	9	03/10/78	
57-20-12	1	03/10/78.	WING OUTBOARD LEADING EDGE. . . . .
57-20-12	2	03/10/78	TC-400 THRU TC-1607
57-20-12	3	04/05/85	TE-1 THRU TE-942 EXCEPT TE-938
57-20-15	1	03/10/78.	REAR SPAR AND TRAILING EDGE . . . . .
57-20-15	2	03/10/78	
57-20-15	3	03/10/78	
57-20-15	4	03/10/78	
57-20-15	5	03/10/78	
57-20-15	6	03/10/78	
57-20-15	7	03/10/78	
57-20-15	8	03/10/78	
57-20-15	9	03/10/78	
57-20-15	10	03/10/78	
57-20-15	11	03/10/78	
57-20-20	1	03/10/78.	WING TIP. . . . .
57-20-20	2	03/10/78	TC-1 THRU TC-399
57-20-20	3	03/10/78	
57-20-21	1	03/10/78.	WING TIP. . . . .
57-20-21	2	03/10/78	TC-400 THRU TC-1600
57-20-21	3	04/05/85	TE-1 THRU TE-767
57-20-21	4	03/10/78	
57-20-21	5	04/05/85	
57-20-21	6	03/10/78	
57-20-21	7	04/05/85	

LIST OF PAGES & TABLE OF CONTENTS
FOR
CHAPTER 57-00-00 WINGS

CHAP/SUB-SECT & UNIT	PAGE NO.	EFFECTIVE DATE	TABLE OF CONTENTS
57-20-22	1	03/10/78	WING TIP
57-20-22	2	03/10/78	TE-768 THRU TE-942 EXCEPT TE-938
57-20-22	3	03/10/78	
57-20-22	4	03/10/78	
57-20-22	5	03/10/78	
57-20-22	6	03/10/78	
57-20-22	7	04/05/85	
57-20-22	8	03/10/78	
57-20-22	9	03/10/78	
57-20-23	1	03/10/78	WING TIP,EXTENDED
57-20-23	2	03/10/78	TC-1601 THRU TC-1607
57-20-23	3	03/10/78	
57-20-23	4	03/10/78	
57-20-23	5	03/10/78	
57-20-23	6	03/10/78	
57-20-23	7	03/10/78	
57-30-01	1	03/10/78	WING SKINS
57-30-01	2	03/10/78	
57-30-01	3	03/10/78	
57-30-01	4	03/10/78	
57-30-01	5	03/10/78	
57-30-01	6	03/10/78	
57-30-01	7	03/10/78	
57-40-01	1	03/10/78	WING INSTALLATION
57-40-01	2	04/30/84	
57-40-01	3	04/05/85	
57-40-01	4	04/30/84	
57-40-01	5	04/30/84	
57-50-01	1	03/10/78	FLAP ASSEMBLY
57-50-01	2	03/10/78	
57-50-01	3	03/10/78	
57-50-01	4	03/10/78	
57-50-01	5	03/10/78	
57-50-01	6	03/10/78	
57-50-01	7	04/05/85	
57-50-10	1	03/10/78	AILERON ASSEMBLY
57-50-10	2	03/10/78	
57-50-10	3	04/05/85	
57-50-10	4	03/10/78	
57-50-10	5	03/10/78	
57-50-10	6	03/10/78	
57-50-10	7	03/10/78	
57-50-10	8	03/10/78	
57-50-10	9	03/10/78	

57-10-01
WING ASSEMBLY/COMPLETE/

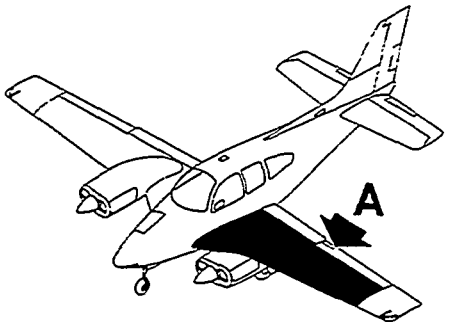

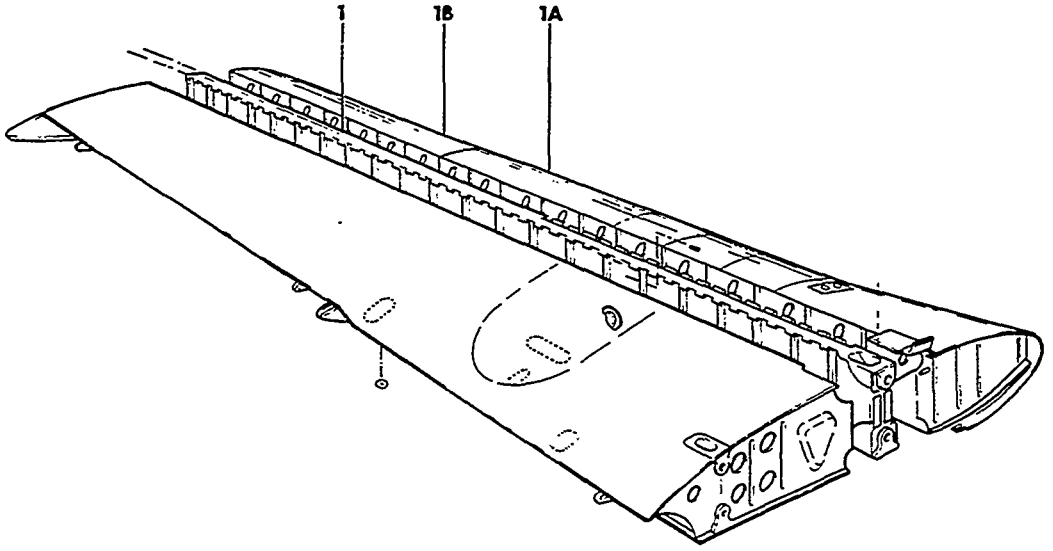

VIEW **A**

55-32-10

FIGURE 10-01.WING ASSEMBLY
/SHEET 1 OF 4 SHEETS/

SUB-SECT UNIT & ITEM NO.	PART NO.	DESCRIPTION 1 2 3 4 5 6 7	UNITS PER ASSY	USABLE ON CODE
10-01	96-110005-601	WING ASSY,LH/COMPLETE/.	1	1
	96-110005-609	WING ASSY,LH/COMPLETE/.	1	2
	96-110005-621	WING ASSY,LH/COMPLETE/.	1	3
	96-110005-621-1	WING ASSY,LH/COMPLETE WITH WING TIP/. . . . . WITH 140 GAL. FUEL SYSTEM/	1	3
	96-110005-681	WING ASSY,LH/LESS FUEL CELLS & WING TIPS/ . . . SPECIFY CAPACITY/	1	1
	96-110005-685C	WING ASSY,LH/LESS FUEL CELLS & WING TIPS/ . . .	1	2
	96-110005-701-1	WING ASSY,LH/LESS FUEL CELLS,WING TIP & . . . . DE-ICER BOOTS/	1	11
	96-110005-602	WING ASSY,RH/COMPLETE/.	1	1
	96-110005-610	WING ASSY,RH/COMPLETE/.	1	2
	96-110005-622	WING ASSY,RH/COMPLETE/.	1	3
	96-110005-622-1	WING ASSY,RH/COMPLETE WITH WING TIP . . . . . WITH 140 GAL. FUEL SYSTEM/	1	3
	96-110005-682	WING ASSY,RH/LESS FUEL CELLS & WING TIPS/ . . . SPECIFY CAPACITY/	1	1
	96-110005-686	WING ASSY,RH/LESS FUEL CELLS & WING TIPS/ . . .	1	2
	96-110005-702-1	WING ASSY,RH/LESS FUEL CELLS,WING TIP & . . . . DE-ICER BOOTS/	1	11
	96-110005-603	. LEADING EDGE & FRONT SPAR ASSY,LH/COMPLETE/ . /SEE 57-20-01/	1	1
	96-110005-605	. LEADING EDGE & FRONT SPAR ASSY,LH/COMPLETE/ . /SEE 57-20-01/	1	2
	96-110005-623	. LEADING EDGE & FRONT SPAR ASSY,LH/COMPLETE/ . /SEE 57-20-01/	1	3
	96-110005-683	. LEADING EDGE & FRONT SPAR ASSY,LH/LESS. . . . FUEL CELL/SPECIFY CAPACITY/SEE 57-20-01/	1	1
	96-110005-687	. LEADING EDGE & FRONT SPAR ASSY,LH/LESS. . . . FUEL CELL/SPECIFY CAPACITY/SEE 57-20-01/	1	2
	96-110005-604	. LEADING EDGE & FRONT SPAR ASSY,RH/COMPLETE/ . /SEE 57-20-01/	1	1
	96-110005-606	. LEADING EDGE & FRONT SPAR ASSY,RH/COMPLETE/ . /SEE 57-20-01/	1	2
	96-110005-624	. LEADING EDGE & FRONT SPAR ASSY,RH/COMPLETE/ . /SEE 57-20-01/	1	3
	96-110005-684	. LEADING EDGE & FRONT SPAR ASSY,RH/LESS. . . . FUEL CELL/SPECIFY CAPACITY/SEE 57-20-01/	1	1
	96-110005-688	. LEADING EDGE & FRONT SPAR ASSY,RH/LESS. . . . FUEL CELL/SPECIFY CAPACITY/SEE 57-20-01/	1	2
	95-110013-1	. . FRONT SPAR ASSY,LH WING/SEE 57-10-20/ . . .	1	4
- 1	000-110011-3	. . FRONT SPAR ASSY,LH WING/SEE 57-10-21/ . . .	1	5
	95-110013-2	. . FRONT SPAR ASSY,RH WING/SEE 57-10-20/ . . .	1	4
	000-110011-4	. . FRONT SPAR ASSY,RH WING/SEE 57-10-21/ . . .	1	5
	95-110041-601	. . INBOARD LEADING EDGE ASSY,LH/SEE 57-20-05/.	1	1
- 1A	96-110007-603	. . INBD LEADING EDGE ASSY,LH/SEE 57-20-06/ . .	1	6
	95-110041-602	. . INBOARD LEADING EDGE ASSY,RH/SEE 57-20-05/.	1	1
	96-110007-604	. . INBD LEADING EDGE ASSY,RH/SEE 57-20-06/ . .	1	6
R	95-110041-605	. . OUTBOARD LEADING EDGE ASSY,LH/SEE 57-20-10/	1	1
- 1B	96-110007-605	. . OUTBOARD LEADING EDGE ASSY,LH/SEE 57-20-12/	1	6
	95-110041-606	. . OUTBOARD LEADING EDGE ASSY,RH/SEE 57-20-10/	1	1
	96-110007-606	. . OUTBOARD LEADING EDGE ASSY,RH/SEE 57-20-12/	1	6

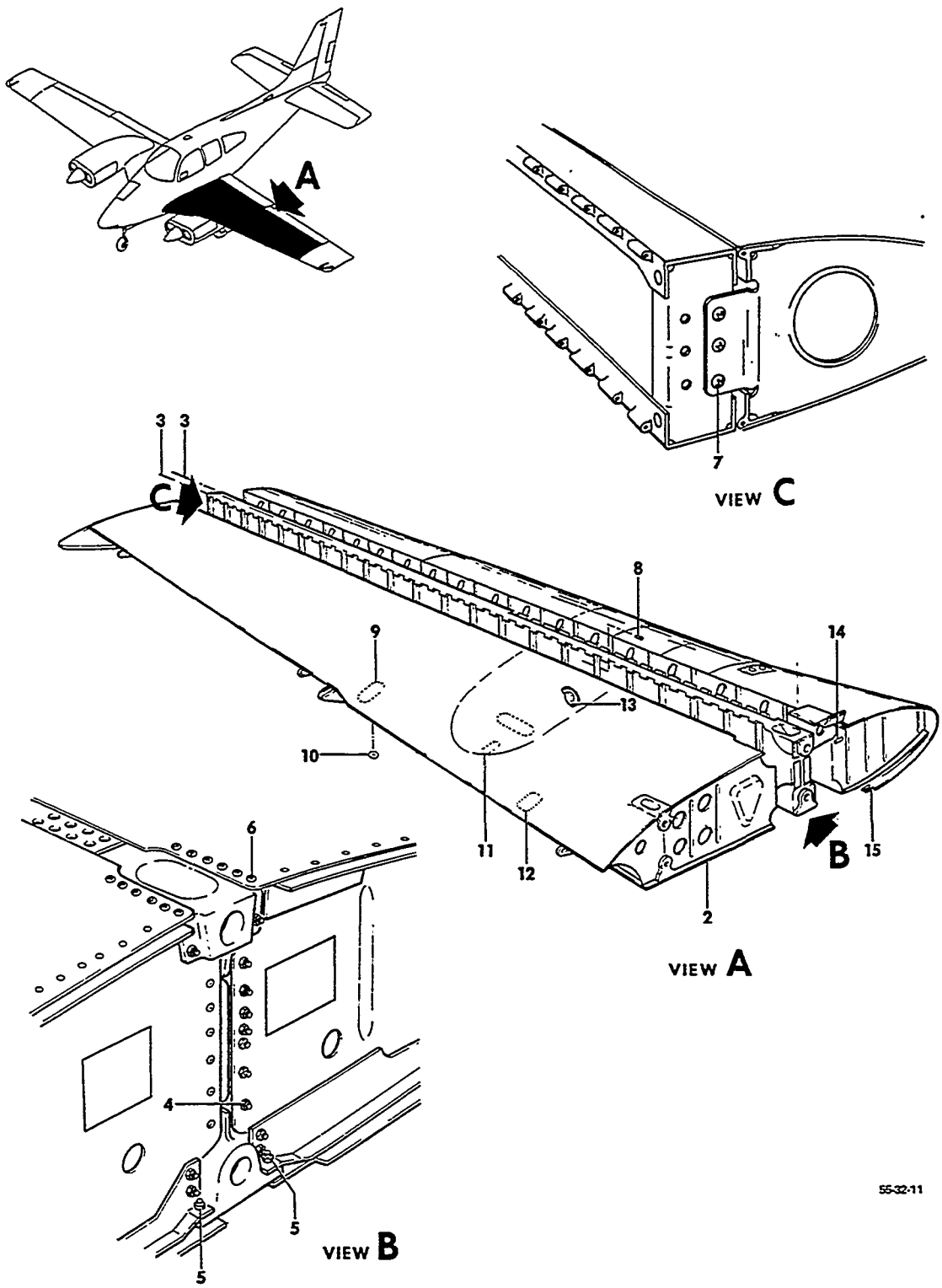

FIGURE 10-01.WING ASSEMBLY
/SHEET 2 OF 4 SHEETS/

SUB-SECT UNIT & ITEM NO.	PART NO.	DESCRIPTION 1 2 3 4 5 6 7	UNITS PER ASSY	USABLE ON CODE
10-01 - 2	95-110014-687	WING MAIN SECTION ASSY,LH/SEE 57-10-10/	1	7
	95-110014-707	WING MAIN SECTION ASSY,LH/SEE 57-10-10/	1	3
	95-110014-688	WING MAIN SECTION ASSY,RH/SEE 57-10-10/	1	7
	95-110014-708	WING MAIN SECTION ASSY,RH/SEE 57-10-10/	1	3
		/ATTACHING PARTS/		
- 3	105774C-ZG18700	PIN,HINGE	2	
- 4	NAS220	SCREW	20	
	AN960-8	WASHER	20	
	MS20365-832	NUT	20	
- 5	AN525-832R	SCREW	10	
	AN960-8	WASHER	10	
	MS20365-832	NUT	10	
- 6	AN525-1032R	SCREW	12	
	AN960-10	WASHER	12	
	MS20365-1032	NUT	12	
- 7	AN515-8R8	SCREW	6	
- 8	AN3-4A/M/	BOLT	6	
	AN960-10	WASHER	6	
	MS20365-1032	NUT/SUPERSEDES AN365-1032/	6	
	95-110014-339	DOOR ASSY,AILERON TAB ACTUATOR & PULLEY	1	
		/ATTACHING PARTS/		
	AN526-832-6	SCREW	6	
- 9	95-110014-341	DOOR,ACCESS	1	
- 10	95-110014-355	COVER	1	
- 11	414-920022-1	VENT,RECESSED FUEL	1	
- 12	95-110014-353	COVER,MAIN TANK DRAIN	1	
- 13	95-110023-21	COVER,STA. 66 RIB ASSY	1	
- 14	103637	PLACARD	1	
		/ATTACHING PARTS/		
	49384	FASTENER	2	
- 15	45-115053	CLIP ASSY,WING	1	
	45-115053-1	CLIP	1	
	A6163-8Z	NUTPLATE	1	

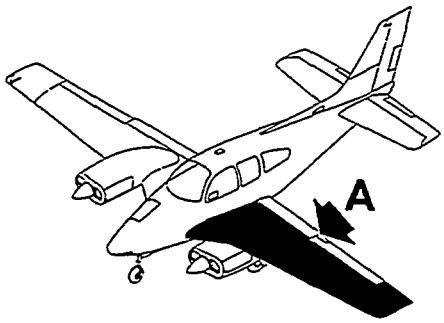

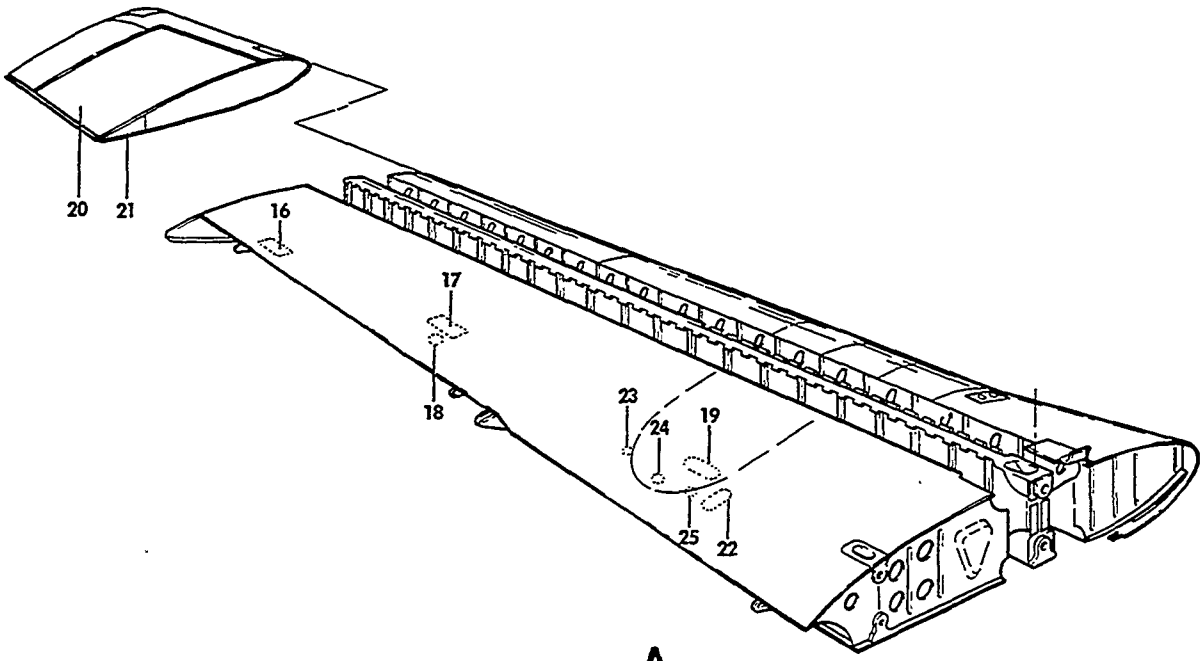

VIEW A

55-32-12

FIGURE 10-01.WING ASSEMBLY
/SHEET 3 OF 4 SHEETS/

SUB-SECT UNIT & ITEM NO.	PART NO.	DESCRIPTION 1 2 3 4 5 6 7	UNITS PER ASSY	USABLE ON CODE
10-01 - 16	95-110014-253	. DOOR,WING TIP ACCESS.	1	
		/ATTACHING PARTS/		
	AN5078832R8	. SCREW	6	
- 17	95-110024-1	. DOOR ASSY,LH AUXILIARY TANK ACCESS.	1	8
	58-110011-1	. DOOR ASSY,LH AUXILIARY TANK ACCESS.	1	9
	95-110024-2	. DOOR ASSY,RH AUXILIARY TANK ACCESS.	1	8
	58-110011-2	. DOOR ASSY,RH AUXILIARY TANK ACCESS.	1	9
		/ATTACHING PARTS/		
	AN509-8R8	. SCREW	18	
- 18	50-110025-44	. DOOR,AUXILIARY FUEL CELL TRANSMITTER.	1	
		/ATTACHING PARTS/		
	AN507-832R8	. SCREW	6	
- 19	50-110074-5	. DOOR,AUXILIARY TANK ACCESS LH	1	
	50-110074-6	. DOOR,AUXILIARY TANK ACCESS RH	1	
		/ATTACHING PARTS/		
	AN507-832-7	. SCREW	19	
- 20	R 95-170000-601	. TIP ASSY,LH WING/SEE CHAPTER 57-20-20/. . . .	1	1
	96-170000-603	. TIP ASSY,LH WING/SEE CHAPTER 57-20-21/. . . .	1	10
	58-170000-607	. TIP ASSY,LH WING/SEE CHAPTER 57-20-22/. . . .	1	9
	95-170000-602	. TIP ASSY,RH WING/SEE CHAPTER 57-20-20/. . . .	1	1
	96-170000-604	. TIP ASSY,RH WING/SEE CHAPTER 57-20-21/. . . .	1	10
	58-170000-608	. TIP ASSY,RH WING/SEE CHAPTER 57-20-22/. . . .	1	9
		/ATTACHING PARTS/		
	AN525-832R10	. SCREW	42	
	AN525-10-3	. SCREW	3	
	AN960-8	. WASHER.	2	
	MS20365-832	. NUT	42	
	95-170000-63	. COVER ASSY,WING TIP LH.	1	
	95-170000-64	. COVER ASSY,WING TIP RH.	1	
		/ATTACHING PARTS/		
	AN525-832R10	. SCREW	7	
- 21	95-170000-61	. . COVER,LH.	1	
	95-170000-62	. . COVER,RH.	1	
	H1S832BC100X200	. . NUTPLATE/SUPERSEDES W1S832BC100/.	5	
	22A17A82BC100	. . NUTPLATE.	2	
- 22	35-115199-12	. DOOR,AILERON CABLE INSPECTION	1	
		/ATTACHING PARTS/		
	AN526-832-6	. SCREW	6	
- 23	35-115200-42	. DOOR,AILERON CABLE INSPECTION/LH ONLY/. . . .	1	
- 24	35-115200-42	. DOOR,AILERON CABLE PULLEY	1	
- 25	35-115200-42	. DOOR,AILERON CABLE INSPECTION	1	
		/ATTACHING PARTS/		
	AN525-832-6	. SCREW	4	

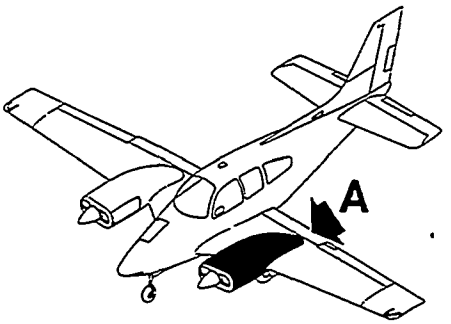

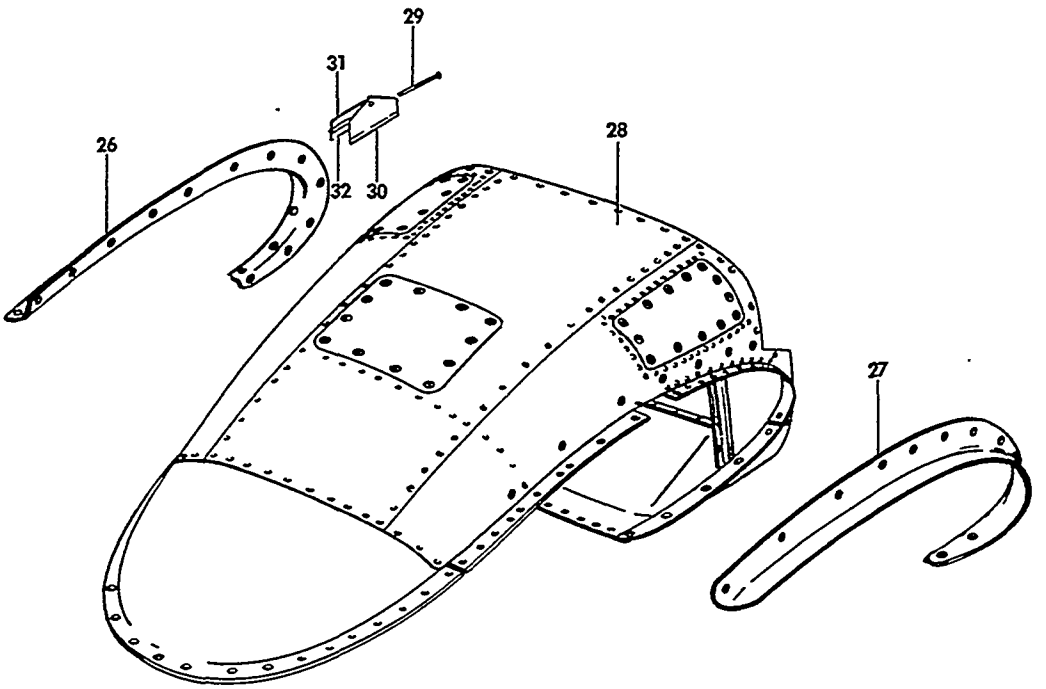

VIEW A

55-32-13

FIGURE 10-01.WING ASSEMBLY
/SHEET 4 OF 4 SHEETS/

ATA CODE & INDEX NO.	PART NO.	DESCRIPTION 1 2 3 4 5 6 7	UNITS PER ASSY	USABLE ON CODE
10-01 - 26	96-110010-5	. FILLET,OUTBOARD LH.	1	8
	96-110010-9	. FILLET,OUTBOARD LH.	1	9
	96-110010-6	. FILLET,OUTBOARD RH.	1	8
	96-110010-11	. FILLET,OUTBOARD RH.	1	9
- 27	96-110010-7	. FILLET,INBOARD LH	1	8
	96-110010-13	. FILLET,INBOARD LH	1	9
	96-110010-8	. FILLET,INBOARD RH	1	8
	96-110010-15	. FILLET,INBOARD RH	1	9
		/ATTACHING PARTS/		
	AN525-10R6	. SCREW	10	
		----*----		
- 28	96-980001-601	. NACELLE ASSY,LH/SEE CHAPTER 54/	1	7
	96-980001-609	. NACELLE ASSY,LH/SEE CHAPTER 54/	1	3
	96-980001-602	. NACELLE ASSY,RH/SEE CHAPTER 54/	1	7
	96-980001-610	. NACELLE ASSY,RH/SEE CHAPTER 54/	1	3
	95-360012-23	. DOOR ASSY,EXTERNAL POWER.	1	
		/ATTACHING PARTS/		
- 29	105774C-ZA00400	. PIN,HINGE	1	
	A4-30	. FASTENER.	1	
		----*----		
- 30	95-360012-17	. . DOOR.	1	
- 31	95-360012-19	. . HINGE,HALF.	1	
- 32	95-360012-21	. . HINGE HALF.	1	

CODES OF EFFECTIVITY

1	TC-1 THRU TC-399	2	TC-400 THRU TC-1607
3	TE-1 THRU TE-942 EXCEPT TE-938	4	TC-1 THRU TC-1442 TE-1 THRU TE-862
5	TC-1443 THRU TC-1607 TE-863 THRU TE-942 EXCEPT TE-938	6	TC-400 THRU TC-1607 TE-1 THRU TE-942 EXCEPT TE-938
7	TC-1 THRU TC-1607	8	TC-1 THRU TC-1607 TE-1 THRU TE-767
9	TE-768 THRU TE-942 EXCEPT TE-938	10	TC-400 THRU TC-1607 TE-1 THRU TE-767
11	TC-501 THRU TC-1607		

"END"

57-10-10
WING SECTION ASSY

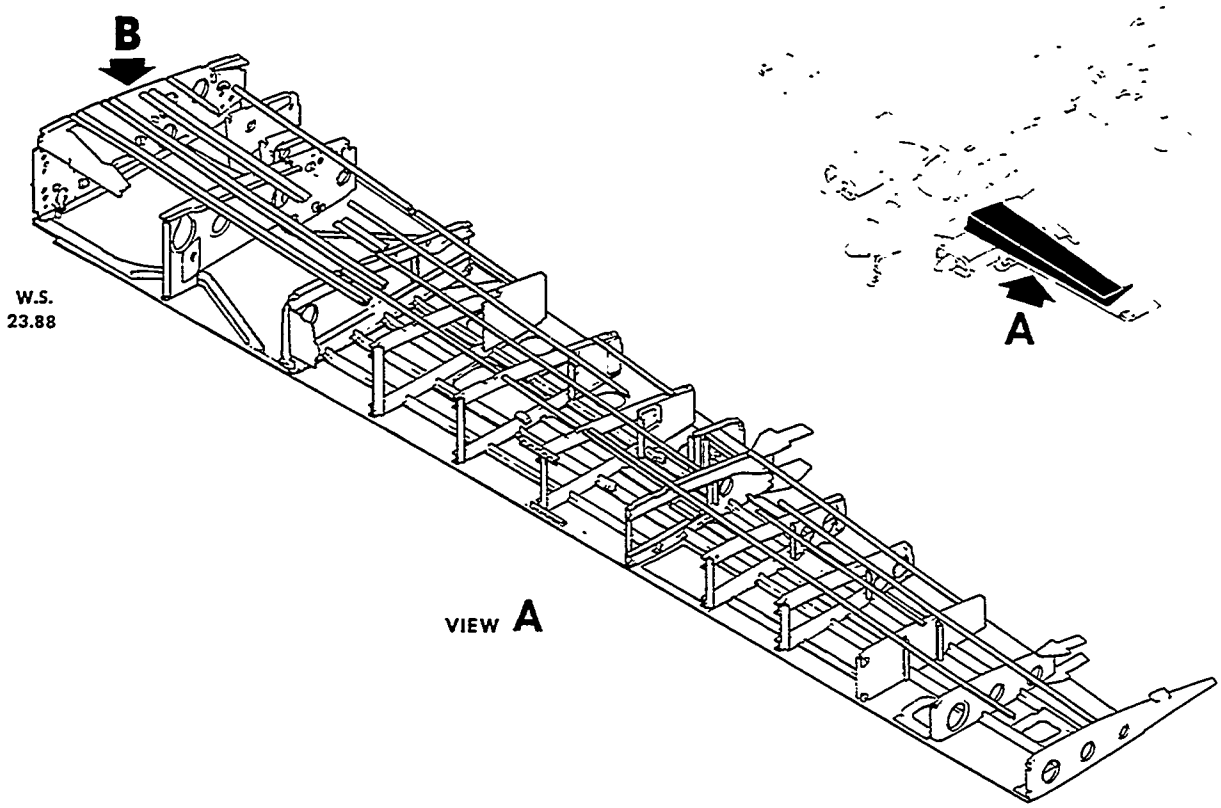

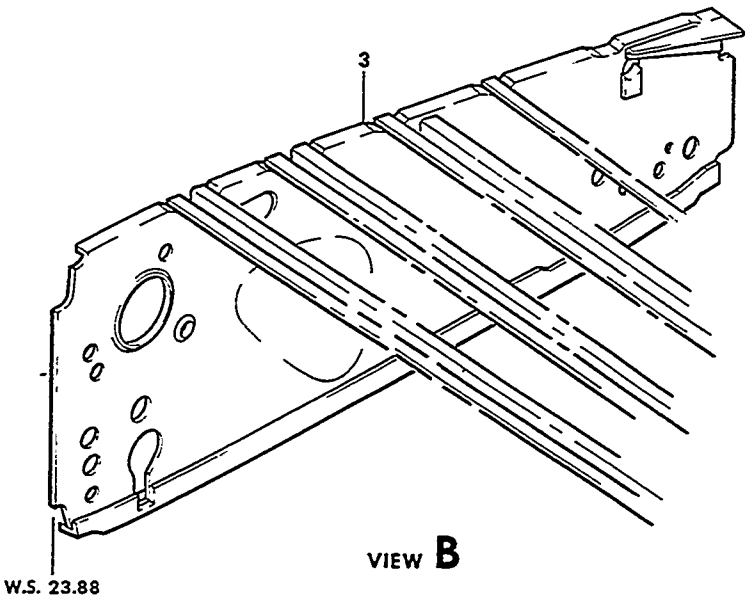

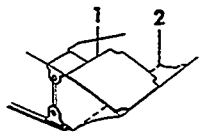

RIGHT HAND

55-36-28

FIGURE 10-10.MAIN WING SECTION ASSY
/SHEET 1 OF 10 SHEETS/

ATA CODE & INDEX NO.	PART NO.	DESCRIPTION 1 2 3 4 5 6 7	UNITS PER ASSY	USABLE ON CODE
10-10	95-110014-687	WING MAIN SECTION ASSY,LH	1	1
	95-110014-707	WING MAIN SECTION ASSY,LH	1	2
	95-110014-688	WING MAIN SECTION ASSY,RH	1	1
	95-110014-708	WING MAIN SECTION ASSY,RH	1	2
	35-115194-31	. SKIN,RH	1	4
- 1	95-110014-431	. SKIN,RH	1	5
	35-115194-33	. SKIN,RH	1	4
- 2	95-110014-425	. SKIN,RH	1	5
	95-110014-601	. WING ASSY,LH/LESS FRONT SPAR & LEADING EDGE/.	1	1
	95-110014-701	. WING ASSY,LH/LESS FRONT SPAR & LEADING EDGE/.	1	3
	95-110007-721	. WING ASSY,LH/LESS FRONT SPAR & LEADING EDGE/.	1	6
	95-110014-602	. WING ASSY,RH/LESS FRONT SPAR & LEADING EDGE/.	1	1
	95-110014-702	. WING ASSY,RH/LESS FRONT SPAR & LEADING EDGE/.	1	3
	95-110007-722	. WING ASSY,RH/LESS FRONT SPAR & LEADING EDGE/.	1	6
	95-110014-605	. . REAR SPAR & TRAILING EDGE ASSY,LH /SEE 57-20-15/	1	11
	95-110014-705	. . REAR SPAR & TRAILING EDGE ASSY,LH /SEE 57-20-15/	1	12
	95-110014-727	. . REAR SPAR & TRAILING EDGE ASSY,LH /SEE 57-20-15/	1	13
	95-110014-606	. . REAR SPAR & TRAILING EDGE ASSY,RH /SEE 57-20-15/	1	11
	95-110014-706	. . REAR SPAR & TRAILING EDGE ASSY,RH /SEE 57-20-15/	1	12
	95-110014-728	. . REAR SPAR & TRAILING EDGE ASSY,RH /SEE 57-20-15/	1	13
	95-110014-603	. . PANEL ASSY,LH	1	1
	95-110014-703	. . PANEL ASSY,LH	1	2
	95-110014-604	. . PANEL ASSY,RH	1	1
	95-110014-704	. . PANEL ASSY,RH	1	2
- 3	95-110031-601	. . . RIB ASSY,LH/STA 23.881/	1	
	95-110031-1	. . . . RIB,LH.	1	
	115005-3	. . . . GROMMET/SUPERSEDES MS35489-13/.	1	
	95-110031-3	. . . . ANGLE,LH/LONG/.	1	
	95-110031-5	. . . . GUSSET,LH	1	
	95-110031-7	. . . . DOUBLER,LH.	1	
	35-115070-12	. . . . ANGLE,LH.	1	
	95-110031-17	. . . . ANGLE,LH AFT HINGE FWD.	1	
	95-110031-19	. . . . ANGLE,LH AFT HINGE AFT.	1	
	95-110031-9	. . . . FAIRLEAD.	1	
	95-110031-11	. . . . ANGLE,LH FWD HINGE FWD.	1	
	95-110031-13	. . . . ANGLE,LH FWD HINGE AFT.	1	
	95-110031-15	. . . . ANGLE,LH/NEST INSIDE 92-110031-3/	1	
	35-115070-22	. . . . CLIP,LH	1	
	96-110016-5	. . . . REINFORCEMENT	1	
	95-110032-601	. . . RIB ASSY,RH/STA 23.881/	1	7
	95-110032-603	. . . RIB ASSY,RH/STA 23.881/	1	6
	95-110032-1	. . . . RIB,RH.	1	
	95-110032-3	. . . . ANGLE,RH/LONG/.	1	
	95-110032-11	. . . . ANGLE,RH AFT HINGE FWD.	1	
	95-110032-13	. . . . ANGLE,RH AFT HINGE AFT.	1	
	95-110032-5	. . . . ANGLE,RH FWD HINGE FWD.	1	
	95-110032-7	. . . . ANGLE,RH FWD HINGE AFT.	1	
	95-110032-9	. . . . ANGLE,RH/NEST INSIDE 95-110032-3/	1	
	35-115070-23	. . . . CLIP,RH	1	
	35-115070-13	. . . . ANGLE,RH.	1	
	35-115130-10	. . . . ANGLE,RH.	1	
	45-115076-8	. . . . ANGLE,RH.	1	7
	95-110031-9	. . . . FAIRLEAD.	1	
	96-110016-7	. . . . REINFORCEMENT	1	6

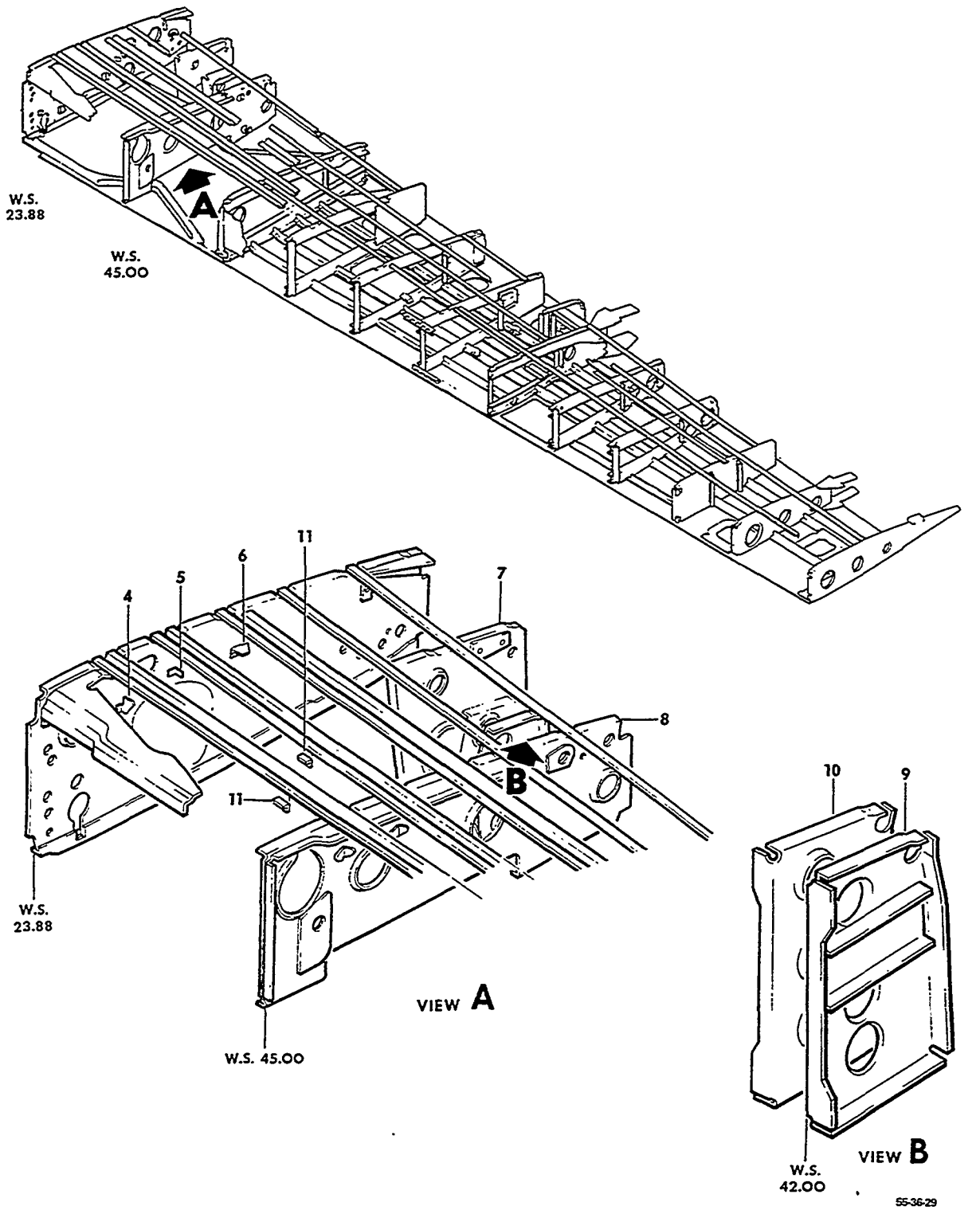

FIGURE 10-10.MAIN WING SECTION ASSY
/SHEET 2 OF 10 SHEETS/

ATA CODE & INDEX NO.	PART NO.	DESCRIPTION 1 2 3 4 5 6 7	UNITS PER ASSY	USABLE ON CODE
10-10 - 4	35-115269	CLIP,LH STRINGER.	1	
- 5	108424-4	CLIP,LH STRINGER.	1	
- 6	35-115070-24	CLIP,LH/STA 23/	1	
	35-115070-25	CLIP,RH/STA 23/	2	
- 7	95-110030-601	RIB ASSY,LH/STA 34/	1	
	95-110030-1	RIB,LH.	1	
	95-110030-3	DOUBLER,LH.	1	
	95-110030-7	STOP,LH	1	
	AN227-7B	SOCKET,LH	2	
	AN227-9B	EYELET,LH	2	
- 8	95-110026-601	RIB ASSY,LH/STA 45/	1	7
	95-110026-603	RIB ASSY,LH/STA 45/	1	8
	95-110026-1	RIB,LH.	1	7
	95-110026-15	RIB,LH.	1	8
	95-110026-17	DOUBLER,LH.	1	
	95-110026-7	DOUBLER,LH.	1	7
	95-110026-21	DOUBLER,LH.	1	8
	35-115100-18	DOUBLER,LH.	1	7
	35-115100-20	CLIP,LH	1	
	35-115100-22	ANGLE,LH.	1	
	35-115100-24	ANGLE,LH.	1	
	96-920001-195	SUPPORT,LH.	1	9
	96-920017	SUPPORT,LH.	1	10
	49160	BAND,LH	1	
	AN515-6-4	SCREW	1	
	AN960-6L	WASHER.	1	
	AN365-632	NUT	1	
	MS35489-11	GROMMET,LH/SUPERSEDES AN931-6-10/	3	
	MS35489-6	GROMMET,LH/SUPERSEDES AN931-4-7/.	2	
	AN227-7B	SOCKET,LH	3	
	AN227-9B	EYELET,LH	3	
	95-110026-9	FAIRLEAD.	1	
	22A17-82	NUTPLATE.	1	
- 9	35-115246	SUPPORT ASSY,LH	1	
	35-115241	SUPPORT ASSY,RH	1	
	35-115246-2	SUPPORT,LH.	1	
	35-115241-2	SUPPORT,RH.	1	
	35-115246-4	CHANNEL,LH.	1	
	35-115241-6	CHANNEL,RH.	1	
- 10	35-115247	SUPPORT ASSY,LH	1	
	35-115242	SUPPORT ASSY,RH	1	
	35-115247-2	SUPPORT,LH.	1	
	35-115242-2	SUPPORT,RH.	1	
	35-115247-4	CHANNEL,LH.	1	
	35-115242-4	CHANNEL,RH.	1	
- 11	35-115142-40	CLIP,LH STRINGER.	2	7
	35-115142-20	CLIP,LH STRINGER.	2	8

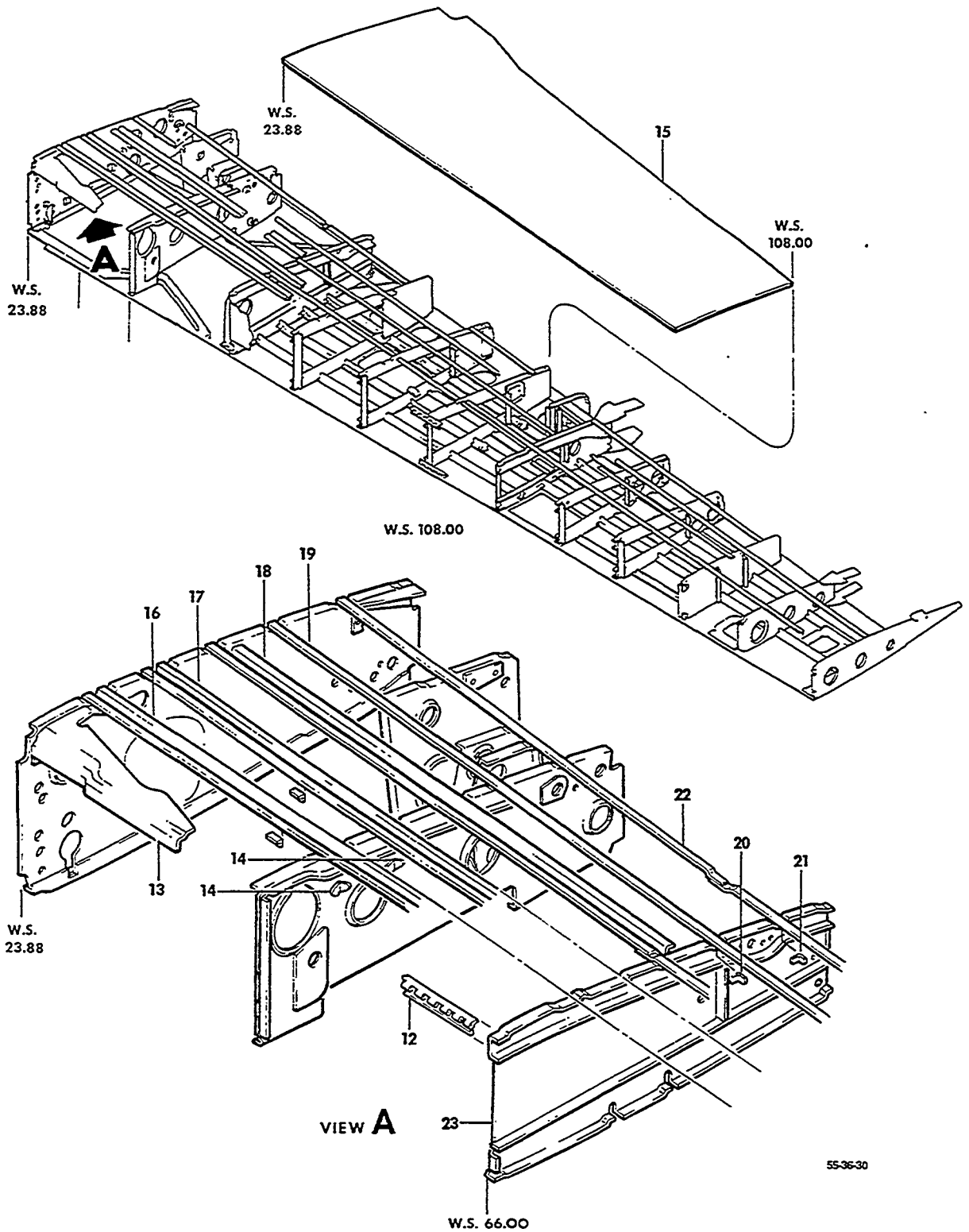

FIGURE 10-10.MAIN WING SECTION ASSY
/SHEET 3 OF 10 SHEETS/

ATA CODE & INDEX NO.	PART NO.	DESCRIPTION 1 2 3 4 5 6 7	UNITS PER ASSY	USABLE ON CODE
10-10 - 12	95-110014-295	HINGE,UPPER LH/STA 23 TO 108/	1	
	95-110014-296	HINGE,UPPER RH/STA 23 TO 108/	1	
- 13	50-110059-2	GUSSET,LH/STA 23/	1	
- 14	35-115267	CLIP,STRINGER LH.	2	
	108424-2	CLIP,STRINGER	30	
- 15	95-110014-169	SKIN,UPPER INBD LH.	1	7
	95-110014-477	SKIN,UPPER INBD LH.	1	6
	95-110014-172	SKIN,UPPER INBD RH.	1	7
	95-110014-478	SKIN,UPPER INBD RH.	1	6
- 16	95-110014-139	STRINGER,LH	1	
	95-110014-142	STRINGER,RH	1	
- 17	95-110014-143	STRINGER,LH	1	
	95-110014-146	STRINGER,RH	1	
	95-110014-150	STRINGER,RH	1	
	35-115270	CLIP,LH	2	
	35-115270-1	CLIP,RH	2	
- 18	95-110014-647	FORMER ASSY,LH.	1	
	95-110014-648	FORMER ASSY,RH.	1	
	95-110014-151	FORMER,LH	1	
	AN366F1032	NUTPLATE/LH ONLY/	2	
	45-115144-24	FORMER,RH	1	
	AN366F1032	NUTPLATE/RH ONLY/	1	
	95-110014-275	STRINGER,LH	1	
	95-110014-276	STRINGER,RH	1	
- 19	95-110014-517	STRINGER ASSY,LH.	1	
	95-110014-147	STRINGER,LH	1	
	AN227-7B	SOCKET.	4	
- 20	35-115270	CLIP,LH	1	
	35-115270-1	CLIP,RH	1	
- 21	108424-2	CLIP,STRINGER & LINER	40	
- 22	95-110014-265	STRINGER,LH	1	
	95-110014-268	STRINGER,RH	1	
- 23	95-110023-601	RIB ASSY,LH/STA 66/	1	
	95-110023-602	RIB ASSY,RH/STA 66/	1	
	95-110023-3	RIB,LH.	1	7
	95-110023-31	RIB,LH.	1	6
	95-110023-4	RIB,RH.	1	7
	95-110023-32	RIB,RH.	1	6
	A6195-8Z2A	NUTPLATE.	4	7
	A6416-8Z3	NUT,ANCHOR.	4	6
	22A17-82	NUTPLATE.	1	
	95-110023-5	CHANNEL,LH.	1	
	95-110023-6	CHANNEL,RH.	1	
	95-110023-7	CHANNEL,LH.	1	
	95-110023-8	CHANNEL,RH.	1	
	95-110023-9	ANGLE,LH AFT HINGE AFT.	1	
	95-110023-10	ANGLE,RH AFT HINGE AFT.	1	
	95-110023-11	ANGLE,LH AFT HINGE FWD.	1	
	95-110023-12	ANGLE,RH AFT HINGE FWD.	1	
	95-110023-13	ANGLE,LH FWD HINGE AFT.	1	
	95-110023-14	ANGLE,RH FWD HINGE AFT.	1	
	95-110023-15	ANGLE,LH FWD HINGE FWD.	1	
	95-110023-16	ANGLE,RH FWD HINGE FWD.	1	
	95-110023-17	CHANNEL,LH.	1	
	95-110023-18	CHANNEL,RH.	1	
	95-110023-19	ANGLE,LH.	1	
	95-110023-20	ANGLE,RH.	1	
	AN530-8-4	SCREW	4	

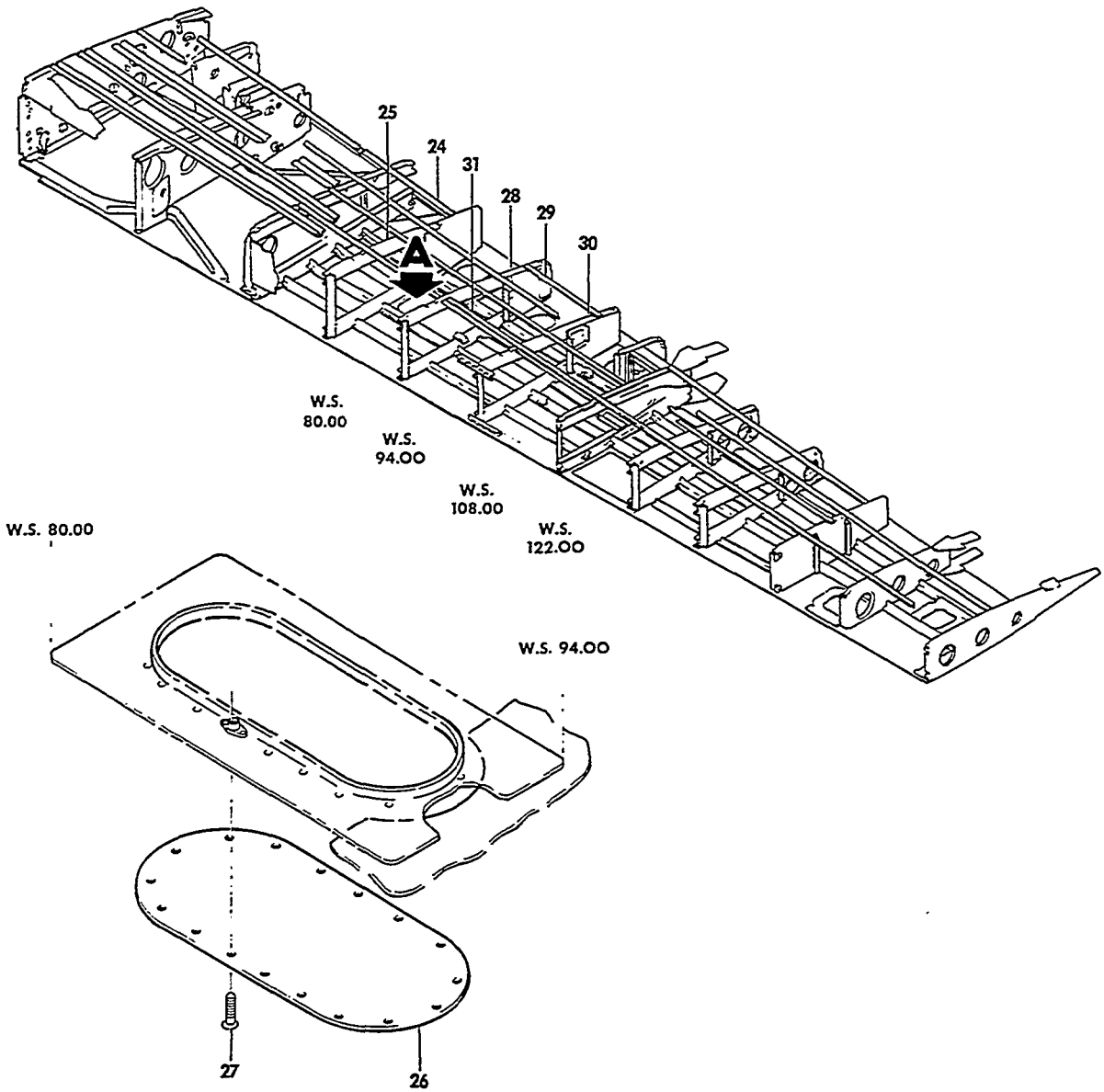

VIEW A

553631

FIGURE 10-10.MAIN WING SECTION ASSY
/SHEET 4 OF 10 SHEETS/

ATA CODE & INDEX NO.	PART NO.	DESCRIPTION 1 2 3 4 5 6 7	UNITS PER ASSY	USABLE ON CODE
10-10	95-110023-25	CHANNEL,LH.	1	
	95-110023-26	CHANNEL,RH.	1	
	AN515-8R8	SCREW	2	
	AN960-8	WASHER.	2	
	AN365-832	NUT	2	
	35-115051-16	PLATE	1	
	35-115051-20	ANGLE,LH.	1	
	35-115051-21	ANGLE,RH.	1	
	35-115200-110	DOUBLER,LOWER LH.	1	
	35-115200-111	DOUBLER,LOWER RH.	1	
	95-110014-325	STIFFENER	2	
- 24	95-110014-269	STRINGER,LH	1	
	95-110014-270	STRINGER,RH	1	
	AN366-1032	NUTPLATE.	5	
	95-110014-343	STIFFENER,LH.	1	
	95-110014-344	STIFFENER,RH.	1	
- 25	95-110014-187	FORMER,LH UPPER/STA 80/	1	
	95-110014-188	FORMER,RH UPPER/STA 80/	1	
	AN366-1032	NUTPLATE.	6	
- 26	50-110074-5	DOOR,AUXILIARY TANK ACCESS/LH/.	1	
	50-110074-6	DOOR,AUXILIARY TANK ACCESS/RH/.	1	
		/ATTACHING PARTS/		
- 27	AN507-832-7	SCREW	19	
		——*——		
	50-110074-602	DOUBLER ASSY,LH	1	
	50-110074-603	DOUBLER ASSY,RH	1	
	50-110074-3	DOUBLER,LH.	1	
	50-110074-4	DOUBLER,RH.	1	
	22A38-828C	NUTPLATE.	19	
- 28	95-110014-623	RIB ASSY,LH/STA 94/	1	
	95-110014-624	RIB ASSY,RH/STA 94/	1	
	95-110014-175	WEB,LH.	1	
	95-110014-176	WEB,RH.	1	
	95-110014-177	FORMER,LH	1	
	95-110014-178	FORMER,RH	1	
	95-110014-181	ANGLE,LH.	1	
	95-110014-182	ANGLE,RH.	1	
	95-110014-319	FAIRLEAD.	1	
	MS35489-17	GROMMET/LH/	1	
	95-110014-179	FORMER,LH/STA 94/	1	
	95-110014-180	FORMER,RH/STA 94/	1	
	95-110014-327	STIFFENER,UPPER & LOWER	2	
- 29	95-110014-905	STIFFENER,LH.	1	
	95-110014-906	STIFFENER,RH.	1	
- 30	95-110014-641	RIB ASSY,LH/STA 108.281/.	1	
	95-110014-642	RIB ASSY,RH/STA 108.281/.	1	
	95-110014-281	CHANNEL,LH.	1	
	95-110014-282	CHANNEL,RH.	1	
	95-110014-289	WEB,LH.	1	
	95-110014-290	WEB,RH.	1	
	H1S832BC100X200	NUTPLATE.	1	
	95-110014-283	CHANNEL,LH/STA 108/	1	
	95-110014-284	CHANNEL,RH/STA 108/	1	
	95-110014-349	CLIP,LH	1	
	95-110014-350	CLIP,RH	1	
	95-110014-329	STIFFENER/STA 108 TO 122/	2	
- 31	95-110014-357	STRINGER,LH/STA 94 TO 191/.	1	
	95-110014-358	STRINGER,RH/STA 94 TO 191/.	1	

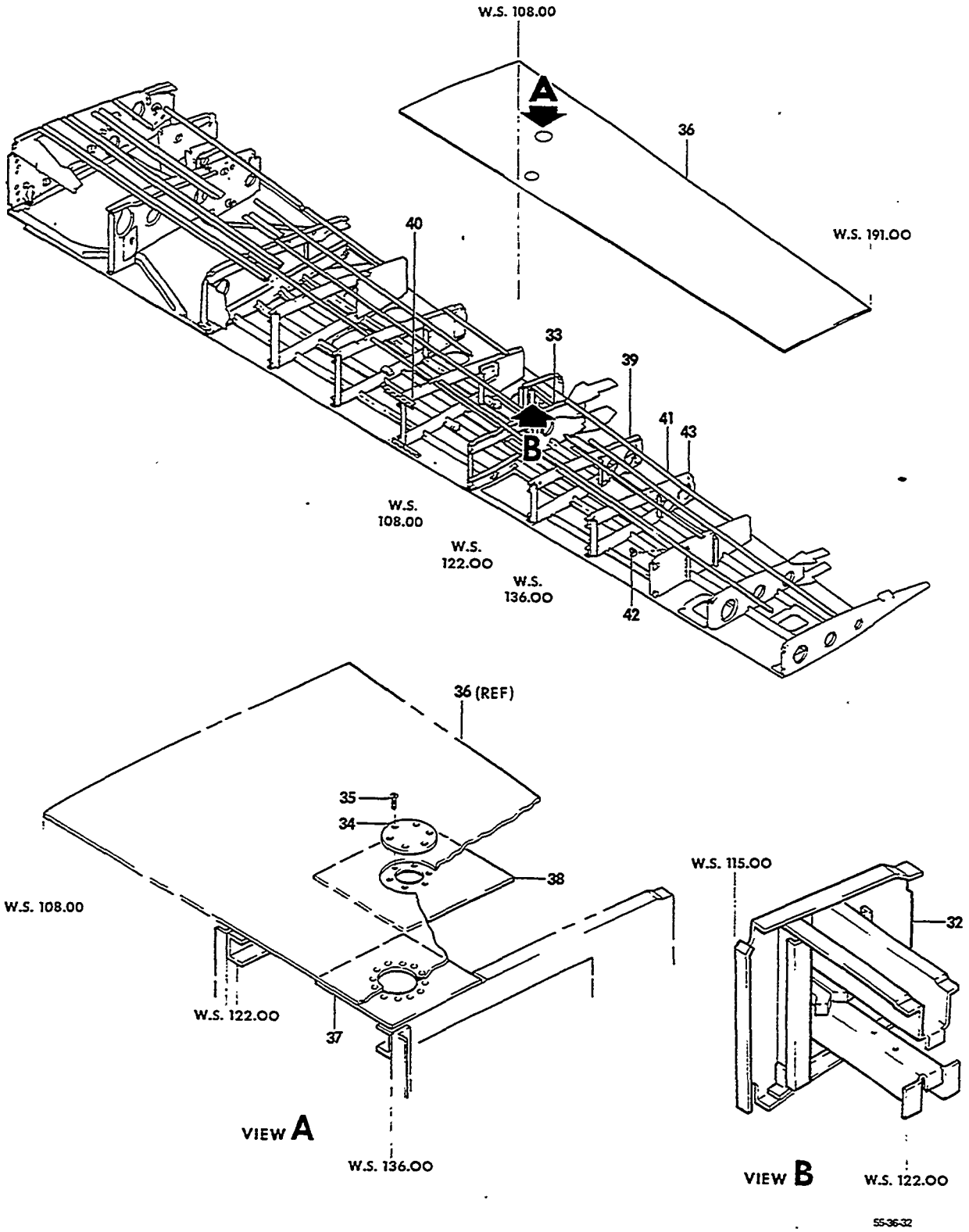

FIGURE 10-10.MAIN WING SECTION ASSY
/SHEET 5 OF 10 SHEETS/

ATA CODE & INDEX NO.	PART NO.	DESCRIPTION 1 2 3 4 5 6 7	UNITS PER ASSY	USABLE ON CODE
10-10	95-110033-1	. . . BRACKET ASSY,LH	1	
	95-110033-2	. . . BRACKET ASSY,RH	1	
- 32	95-110033-3	. . . . RIB,LH.	1	
	95-110033-4	. . . . RIB,RH.	1	
	35-115202-4	. . . . REINFORCEMENT,LH.	1	
	35-115202-5	. . . . REINFORCEMENT,RH.	1	
	35-115202-6	. . . . SUPPORT,LH.	1	
	35-115202-7	. . . . SUPPORT,RH.	1	
	35-115202-10	. . . . CLIP.	1	
	35-115202-12	. . . . CLIP.	1	
	35-115202-14	. . . . DOUBLER	1	
	35-115252-2	. . . . SUPPORT,LH.	1	
	35-115252-3	. . . . SUPPORT,RH.	1	
	35-115252-8	. . . . STOP.	2	
	35-115252-10	. . . . REINFORCEMENT	1	
- 33	95-110014-613	. . . RIB ASSY,LH/STA 122.750/.	1	
	95-110014-614	. . . RIB ASSY,RH/STA 122.750/.	1	
	95-110014-95	. . . . CHANNEL,LH.	1	
	95-110014-96	. . . . CHANNEL,RH.	1	
	95-110014-101	. . . . ANGLE,LH.	1	
	95-110014-102	. . . . ANGLE,RH.	1	
	95-110014-103	. . . . ANGLE,LH.	1	
	95-110014-104	. . . . ANGLE,RH.	1	
	95-110014-105	. . . . ANGLE,LH.	1	
	95-110014-106	. . . . ANGLE,RH.	1	
- 34	50-110025-44	. . . DOOR,AUXILIARY FUEL CELL TRANSMITTER.	1	
		/ATTACHING PARTS/		
- 35	AN507-832R8	. . . SCREW	6	
		——*——		
- 36	95-110014-161	. . . SKIN,UPPER OUTBD LH	1	
	95-110014-162	. . . SKIN,UPPER OUTBD RH	1	
- 37	95-110014-163	. . . DOUBLER,LH.	1	
	95-110014-164	. . . DOUBLER,RH.	1	
- 38	95-110014-627	. . . DOUBLER ASSY,LH	1	
	95-110014-628	. . . DOUBLER ASSY,RH	1	
	95-110014-165	. . . . DOUBLER,LH.	1	
	95-110014-166	. . . . DOUBLER,RH.	1	
	22A38-82BC	. . . . NUTPLATE.	19	
- 39	95-110014-615	. . . RIB ASSY,LH/STA 136.188/.	1	
	95-110014-616	. . . RIB ASSY,RH/STA 136.188/.	1	
	95-110014-79	. . . . ANGLE,LH.	1	
	95-110014-80	. . . . ANGLE,RH.	1	
	95-110014-81	. . . . FORMER,LH	1	
	95-110014-82	. . . . FORMER,RH	1	
	95-110014-91	. . . . WEB,LH.	1	
	95-110014-92	. . . . WEB,RH.	1	
- 40	95-110014-159	. . . HINGE,LH UPPER/STA 108 TO 191/.	1	
	95-110014-160	. . . HINGE,RH UPPER/STA 108 TO 191/.	1	
	95-110014-333	. . . STIFFENER	2	
- 41	95-110014-903	. . . STRINGER,LH	1	
	95-110014-904	. . . STRINGER,RH	1	
- 42	95-110014-367	. . . CLIP/STA 162/	2	
- 43	95-110014-617	. . . RIB ASSY,LH/STA 148.875/.	1	
	95-110014-618	. . . RIB ASSY,RH/STA 148.875/.	1	
	95-110014-67	. . . . CHANNEL,LH.	1	
	95-110014-68	. . . . CHANNEL,RH.	1	
	95-110014-71	. . . . WEB,LH.	1	
	95-110014-72	. . . . WEB,RH.	1	
	95-110014-75	. . . . ANGLE,LH.	1	
	95-110014-76	. . . . ANGLE,RH.	1	
	95-110014-69	. . . . CHANNEL,LH.	1	
	95-110014-70	. . . . CHANNEL,RH.	1	

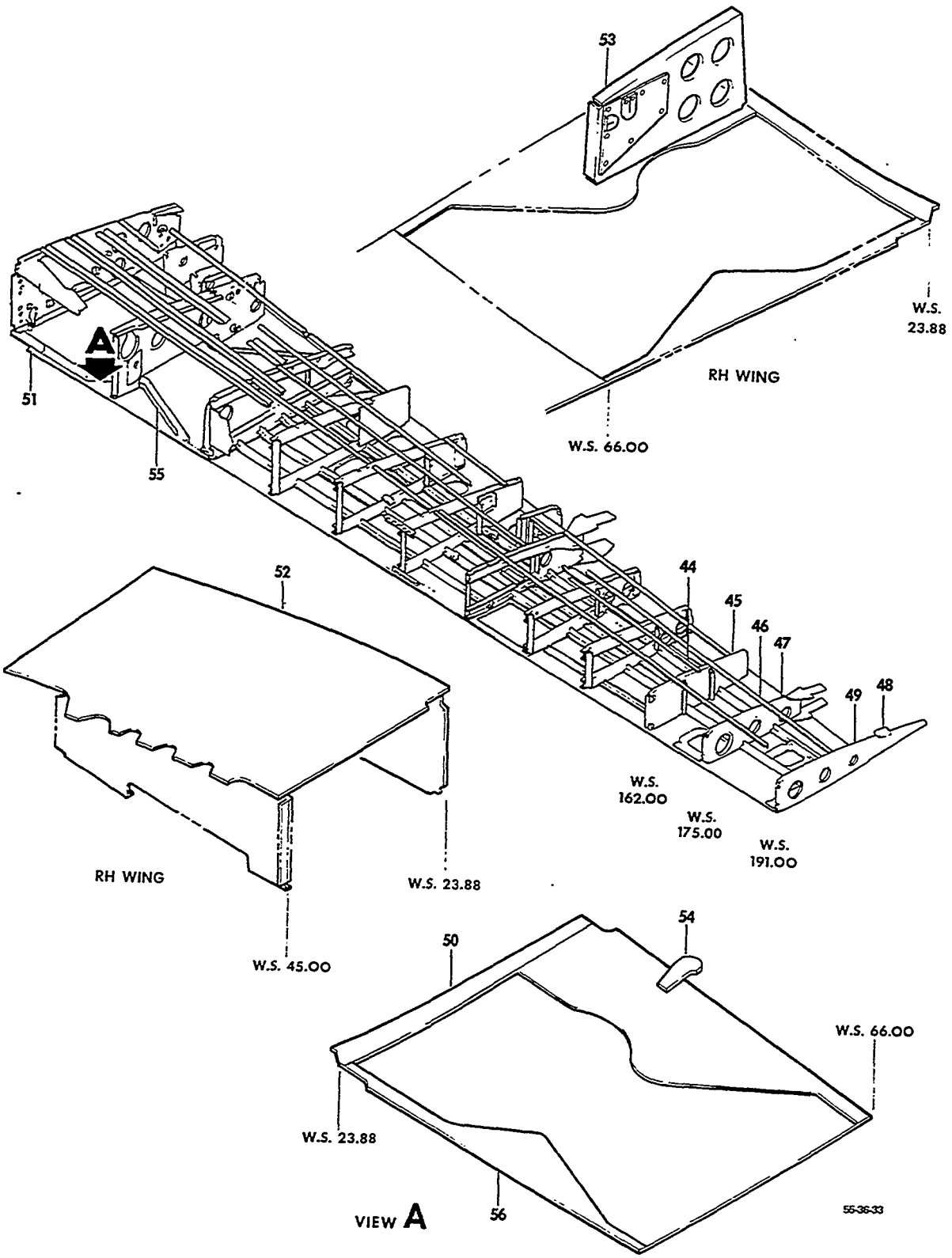

FIGURE 10-10.MAIN WING SECTION ASSY
/SHEET 6 OF 10 SHEETS/

ATA CODE & INDEX NO.	PART NO.	DESCRIPTION 1 2 3 4 5 6 7	UNITS PER ASSY	USABLE ON CODE
10-10 - 44	95-110014-901	STRINGER,LH	1	
	95-110014-902	STRINGER,RH	1	
- 45	95-110014-619	RIB ASSY,LH/STA 162.562/	1	
	95-110014-620	RIB ASSY,RH/STA 162.562/	1	
	95-110014-51	RIB,LH	1	
	95-110014-52	RIB,RH	1	
	95-110014-43	STIFFENER,LH	1	
	95-110014-44	STIFFENER,RH	1	
	95-110014-45	STIFFENER,LH	1	
	95-110014-46	STIFFENER,RH	1	
	95-110014-49	ANGLE,LH	1	
	95-110014-50	ANGLE,RH	1	
	95-110014-53	ANGLE,LH	1	
	95-110014-54	ANGLE,RH	1	
	95-110014-55	CLIP,LH	1	
	95-110014-56	CLIP,RH	1	
	95-110014-57	CLIP,LH	1	
	95-110014-58	CLIP,RH	1	
	95-110014-59	ANGLE	1	
	95-110014-157	ANGLE,LH	1	
	95-110014-158	ANGLE,RH	1	
	95-110014-805	DOUBLER,LH VENT	1	
- 46	95-110014-197	STRINGER,LH	1	
	95-110014-198	STRINGER,RH	1	
- 47	95-110014-639	RIB ASSY,LH/STA 75/	1	
	95-110014-640	RIB ASSY,RH/STA 75/	1	
	95-110014-39	RIB,LH	1	
	95-110014-40	RIB,RH	1	
	95-110014-6	ANGLE,LH	1	
	95-110014-7	ANGLE,RH	1	
- 48	95-110014-377	DOUBLER,LH	1	
	95-110014-378	DOUBLER,RH	1	
- 49	95-110011-3	RIB,LH/STA 191/	1	
	95-110011-4	RIB,RH/STA 191/	1	
- 50	35-115200-6	SKIN,LH	1	
	35-115200-7	SKIN,RH	1	
- 51	45-115054-3	EXTENSION,FRAME LH	1	
	45-115054-4	EXTENSION,FRAME RH	1	
- 52	95-110014-612	WALKWAY ASSY,RH	1	4
	95-110014-699	WALKWAY ASSY,RH	1	8
	96-110019-3	WALKWAY ASSY,RH	1	9
	35-115111	SUPPORT ASSY,RH WALKWAY	1	
- 53	35-115111-2	SUPPORT,WALKWAY	1	
	AN227-8B	STUD	9	
	AN227-9B	EYELET	9	
- 54	95-110014-247	DOUBLER,LH	1	
	95-110014-240	DOUBLER,RH	1	
- 55	95-110014-649	SKIN ASSY,LOWER INBD LH	1	
	95-110014-650	SKIN ASSY,LOWER INBD RH	1	
	35-115203	REINFORCEMENT,LH	1	
	35-115203-1	REINFORCEMENT,RH	1	
	35-115208	GUSSET,LH	1	
	35-115208-1	GUSSET,RH	1	
- 56	95-110014-203	SKIN,LOWER FWD INBD LH	1	7
	95-110014-537	SKIN,LOWER FWD INBD LH	1	6
	95-110014-204	SKIN,LOWER FWD INBD RH	1	7
	95-110014-538	SKIN,LOWER FWD INBD RH	1	6

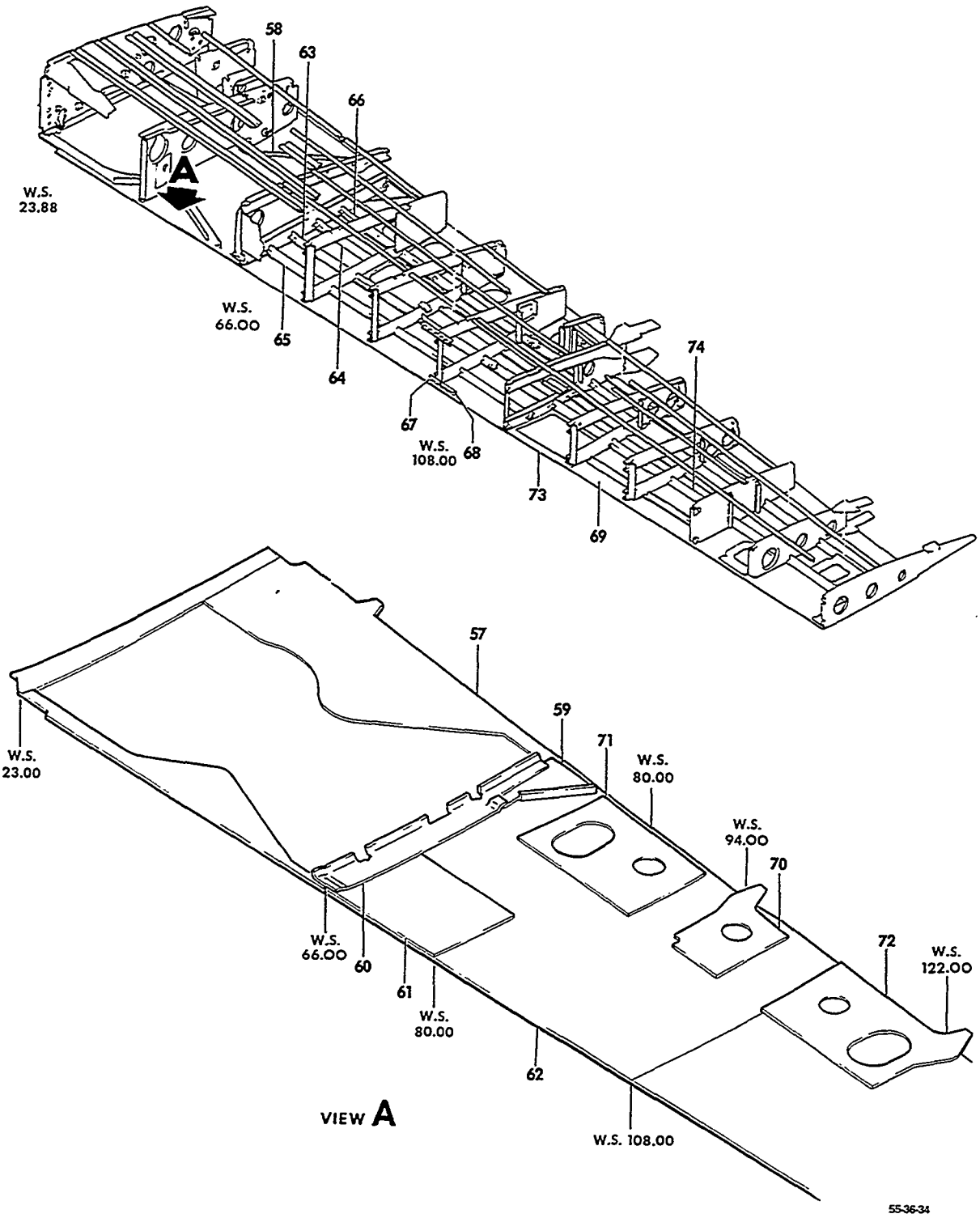

FIGURE 10-10.MAIN WING SECTION ASSY
/SHEET 7 OF 10 SHEETS/

ATA CODE & INDEX NO.	PART NO.	DESCRIPTION 1 2 3 4 5 6 7	UNITS PER ASSY	USABLE ON CODE
10-10 - 57	95-110014-651	. . . SKIN ASSY,LOWER INBD LH	1	
	95-110014-652	. . . SKIN ASSY,LOWER INBD RH	1	
	95-110014-207	. . . . SKIN,LH	1	
	95-110014-208	. . . . SKIN,RH	1	
	35-115200-30	. . . . STRINGER,LH	1	
	35-115200-31	. . . . STRINGER,RH	1	
	35-115205	. . . . REINFORCEMENT,LH.	1	
	35-115205-1	. . . . REINFORCEMENT,RH.	1	
	35-115207	. . . . GUSSET,LH	1	
	35-115207-1	. . . . GUSSET,RH	1	
- 58	95-110014-353	. . . . COVER	1	
- 59	95-110014-219	. . . GUSSET,LH/STA 66/	1	
	95-110014-220	. . . GUSSET,RH/STA 66/	1	
- 60	95-110014-435	. . . DOUBLER,LH.	1	
	95-110014-436	. . . DOUBLER,RH.	1	
- 61	95-110014-449	. . . DOUBLER,LH & RH	1	
- 62	95-110014-205	. . . SKIN,LOWER INBD LH.	1	
	95-110014-206	. . . SKIN,LOWER INBD RH.	1	
- 63	95-110014-227	. . . STRINGER,LH	1	
	95-110014-228	. . . STRINGER,RH	1	
- 64	95-110014-225	. . . STRINGER,LH	1	
	95-110014-226	. . . STRINGER,RH	1	
- 65	95-110014-229	. . . STRINGER,LH LOWER	1	
	95-110014-230	. . . STRINGER,RH LOWER	1	
- 66	95-110014-221	. . . STRINGER,LH	1	
	95-110014-222	. . . STRINGER,RH	1	
- 67	95-110014-321	. . . HINGE,LH LOWER/STA 23 TO 108/	1	
	95-110014-322	. . . HINGE,RH LOWER/STA 23 TO 108/	1	
- 68	95-110014-297	. . . HINGE,LH LOWER/STA 108 TO 191/.	1	
	95-110014-298	. . . HINGE,RH LOWER/STA 108 TO 191/.	1	
- 69	95-110014-209	. . . SKIN,LOWER OUTBD LH	1	
	95-110014-210	. . . SKIN,LOWER OUTBD RH	1	
- 70	95-110014-655	. . . DOUBLER ASSY,LH	1	
	95-110014-656	. . . DOUBLER ASSY,RH	1	
	95-110014-335	. . . . DOUBLER,LH.	1	
	95-110014-336	. . . . DOUBLER,RH.	1	
	NAS680A08K	. . . . NUTPLATE.	4	
- 71	95-110014-235	. . . DOUBLER ASSY,LH	1	
	95-110014-236	. . . DOUBLER ASSY,RH	1	
	95-110014-237	. . . . DOUBLER,LH.	1	
	95-110014-238	. . . . DOUBLER,RH.	1	
	NAS680A08K	. . . . NUTPLATE.	10	
- 72	95-110014-241	. . . DOUBLER ASSY,LH	1	
	95-110014-242	. . . DOUBLER ASSY,RH	1	
	95-110014-243	. . . . DOUBLER,LH.	1	
	95-110014-244	. . . . DOUBLER,RH.	1	
	NAS680A08K	. . . . NUTPLATE.	10	
- 73	95-110014-659	. . . DOUBLER ASSY,LH	1	
	95-110014-660	. . . DOUBLER ASSY,RH	1	
	95-110014-255	. . . . DOUBLER,LH.	1	
	95-110014-256	. . . . DOUBLER,RH.	1	
	AN366F832	. . . . NUTPLATE.	10	
	NAS1024A08	. . . . NUTPLATE.	4	
	NAS697A08	. . . . NUTPLATE.	4	
- 74	95-110014-223	. . . STRINGER,LH	1	
	95-110014-224	. . . STRINGER,RH	1	

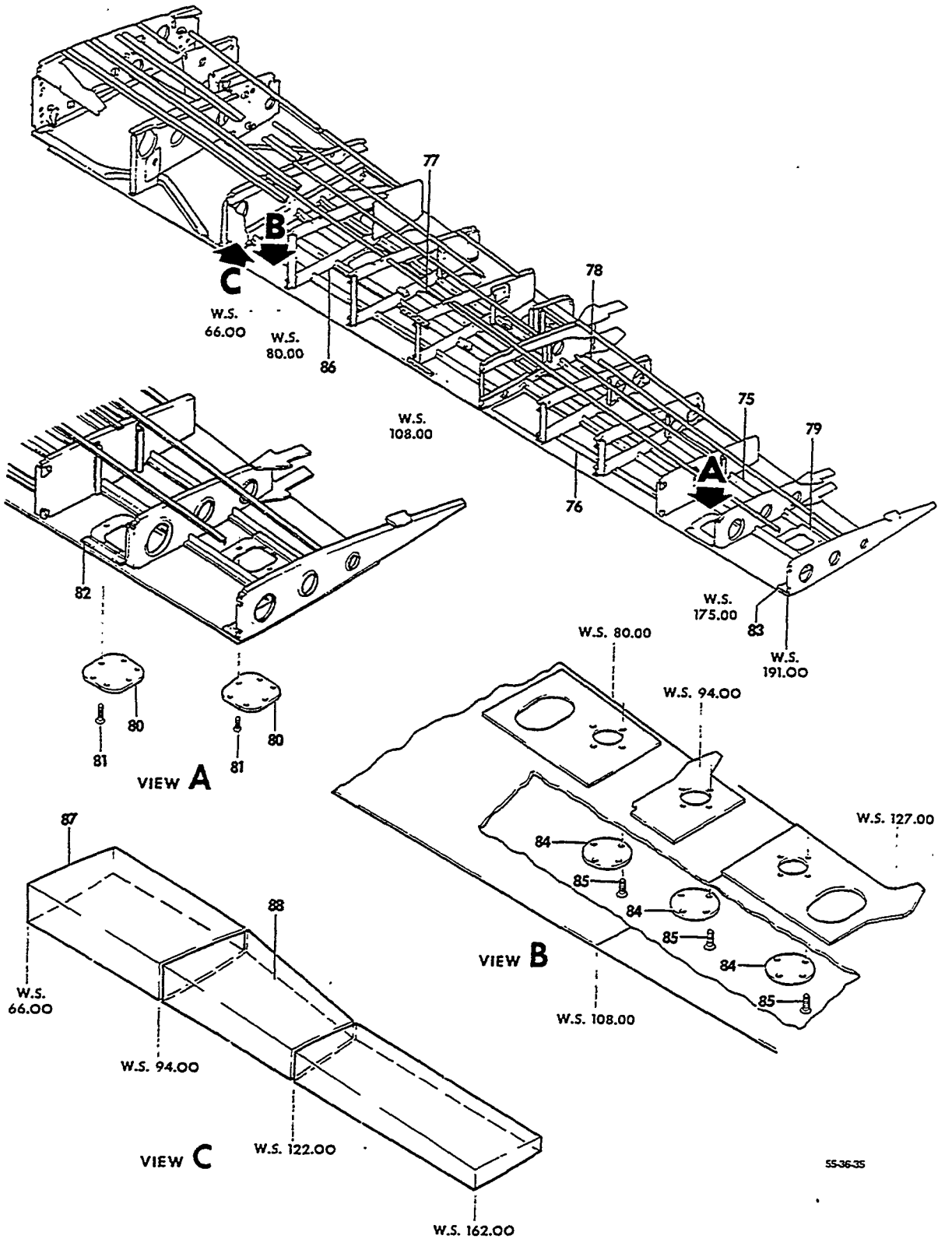

FIGURE 10-10.MAIN WING SECTION ASSY
/SHEET 8 OF 10 SHEETS/

ATA CODE & INDEX NO.	PART NO.	DESCRIPTION 1 2 3 4 5 6 7	UNITS PER ASSY	USABLE ON CODE
10-10 - 75	95-110014-263	STRINGER,LH	1	
	95-110014-264	STRINGER,RH	1	
- 76	000-110027-1	STIFFENER,LOWER	1	
	95-110014-331	STIFFENER,L & RH/UPPER & LOWER/	2	
- 77	95-110014-907	STRINGER,LH	1	
	95-110014-908	STRINGER,RH	1	
- 78	95-110014-911	STRINGER,LH	1	
	95-110014-912	STRINGER,RH	1	
- 79	95-110014-383	DOUBLER ASSY,LH	1	
	95-110014-384	DOUBLER ASSY,RH	1	
	95-110014-381	DOUBLER,LH.	1	
	95-110014-382	DOUBLER,RH.	1	
	NAS697C08M	NUTPLATE.	6	
- 80	95-110014-253	DOOR,WING TIP ACCESS.	2	
		/ATTACHING PARTS/		
- 81	AN507B832R8	SCREW	12	
		——*——		
- 82	95-110014-251	DOUBLER ASSY,LH	1	
	95-110014-252	DOUBLER ASSY,RH	1	
	95-110014-249	DOUBLER,LH.	1	
	95-110014-250	DOUBLER,RH.	1	
	NAS697C08M	NUTPLATE.	6	
- 83	95-110014-379	DOUBLER,LH.	1	
	95-110014-380	DOUBLER,RH.	1	
- 84	35-115200-42	DOOR,ACCESS/3 REQUIRED LH & 2 RH/	3	
		/ATTACHING PARTS/		
- 85	AN525-832R7	SCREW	12	
		——*——		
	50-110093-6	DOUBLER,LH/OPTIONAL/.	1	
	50-110093-2	DOOR,REMOTE COMPASS TRANSMITTER ACCESS.	1	
		/OPTIONAL/		
		/ATTACHING PARTS/		
	MS246938B50	SCREW/OPTIONAL/	6	
	MS21050-08	NUT/OPTIONAL/	6	
		——*——		
	NAJ1-82C	NUTPLATE/OPTIONAL/.	6	
	95-110014-287	ANGLE,LH.	1	
	95-110014-288	ANGLE,RH.	1	
	95-110014-347	DOUBLER,LH/STA 108.281/	1	
	95-110014-348	DOUBLER,RH/STA 108.281/	1	
	95-110014-433	FAIRLEAD/STA 108.281/	1	10
- 86	95-110014-657	FORMER ASSY,LH/STA 80.047/.	1	
	95-110014-658	FORMER ASSY,RH/STA 80.047/.	1	
	95-110014-185	FORMER,LH	1	
	95-110014-186	FORMER,RH	1	
	NAS680A3	NUTPLATE.	3	
	50-110002-122	ANGLE,LH/STA 80/.	1	
	50-110002-123	ANGLE,RH/STA 80/.	1	
- 87	95-110014-629	LINER ASSY,LH/STA 66 TO 94 TOP/	1	
	95-110014-630	LINER ASSY,RH/STA 66 TO 94 TOP/	1	
	95-110014-5	LINER,TOP LH.	1	
	95-110014-6	LINER,TOP RH.	1	
	50-110081	RETAINER.	5	
	50-110002-178	PLATE,INSPECTION.	1	
- 88	95-110014-631	LINER ASSY,LH/STA 94 TO 122 TOP/.	1	
	95-110014-632	LINER ASSY,RH/STA 94 TO 122 TOP/.	1	
	95-110014-25	LINER,TOP LH.	1	
	95-110014-26	LINER,TOP RH.	1	
	50-110081	RETAINER.	6	

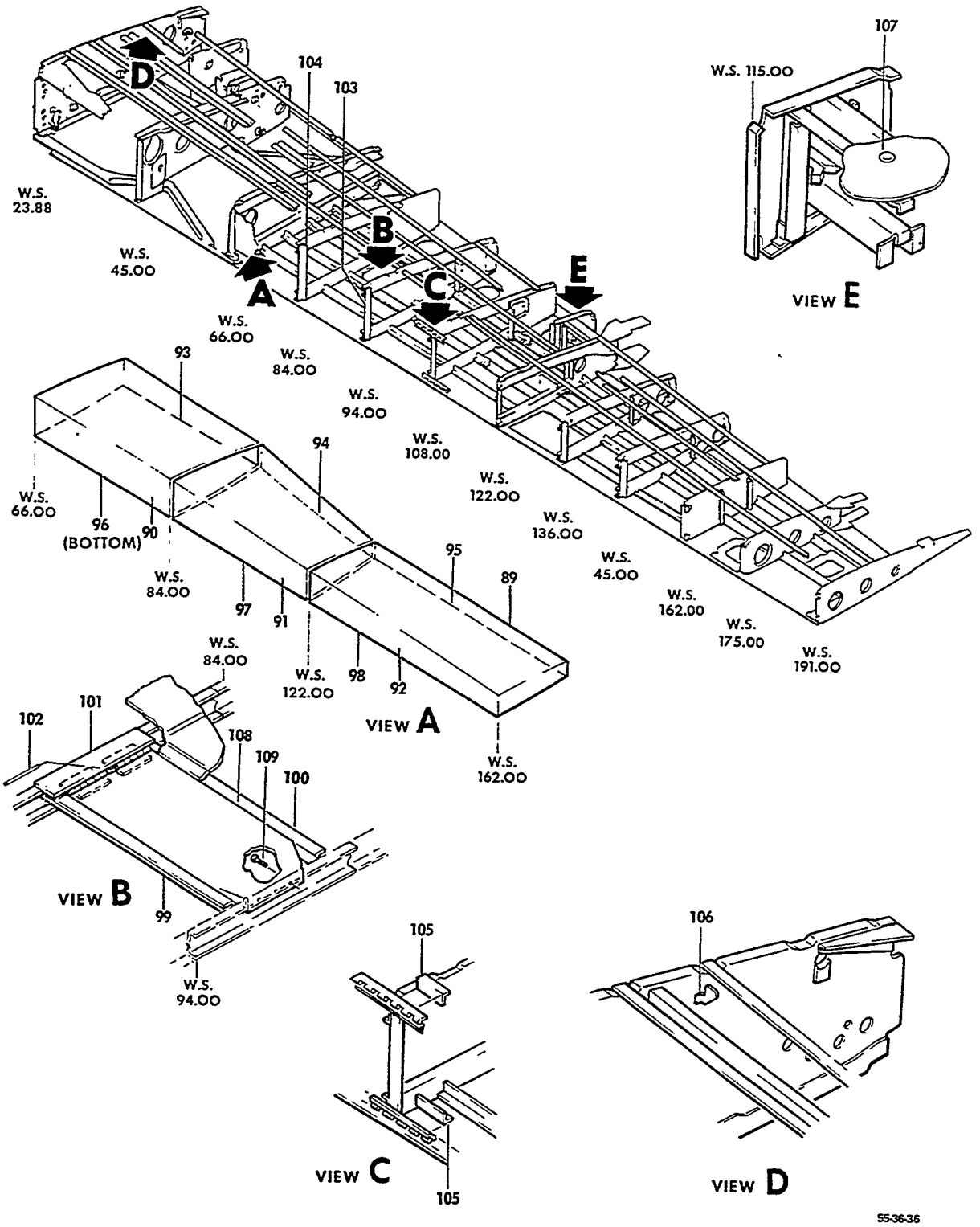

FIGURE 10-10.MAIN WING SECTION ASSY
/SHEET 9 OF 10 SHEETS/

ATA CODE & INDEX NO.	PART NO.	DESCRIPTION 1 2 3 4 5 6 7	UNITS PER ASSY	USABLE ON CODE
10-10 - 89	95-110014-633	. . LINER ASSY,LH/STA 122 TO 162 TOP/	1	
	95-110014-634	. . LINER ASSY,RH/STA 122 TO 162 TOP/	1	
	95-110014-21	. . . LINER,TOP LH.	1	
	95-110014-22	. . . LINER,TOP RH.	1	
	50-110081	. . . RETAINER.	5	
- 90	95-110014-3	. . LINER,LH/STA 66 TO 94 FRONT/.	1	
	95-110014-4	. . LINER,RH/STA 66 TO 94 FRONT/.	1	
- 91	95-110014-11	. . LINER,LH/STA 94 TO 122 FRONT/	1	
	95-110014-12	. . LINER,RH/STA 94 TO 122 FRONT/	1	
- 92	95-110014-17	. . LINER,LH/STA 122 TO 162 FRONT/.	1	
	95-110014-18	. . LINER,RH/STA 122 TO 162 FRONT/.	1	
- 93	95-110014-9	. . LINER,LH/STA 66 TO 94 AFT/.	1	
	95-110014-10	. . LINER,RH.	1	
- 94	95-110014-13	. . LINER,LH/STA 94 TO 122 AFT/	1	
	95-110014-14	. . LINER,RH/STA 94 TO 122 AFT/	1	
- 95	95-110014-15	. . LINER,LH/STA 122 TO 162 AFT/.	1	
	95-110014-16	. . LINER,RH/STA 122 TO 162 AFT/.	1	
- 96	95-110014-7	. . LINER,LH/STA 66 TO 94 BOTTOM/	1	
	95-110014-8	. . LINER,RH/STA 66 TO 94 BOTTOM/	1	
- 97	95-110014-23	. . LINER,LH/STA 94 TO 122 BOTTOM/.	1	
	95-110014-24	. . LINER,RH/STA 94 TO 122 BOTTOM/.	1	
- 98	95-110014-19	. . LINER,LH/STA 122 TO 162 BOTTOM/	1	
	95-110014-20	. . LINER,RH/STA 122 TO 162 BOTTOM/	1	
	108424-2	. . CLIP,STRINGER & LINER	AR	
- 99	50-110002-136	. . ANGLE,LH.	1	
	50-110002-137	. . ANGLE,RH.	1	
-100	50-110002-138	. . ANGLE,LH.	1	
	50-110002-139	. . ANGLE,RH.	1	
-101	50-110002-150	. . DOUBLER,LH.	1	
	50-110002-151	. . DOUBLER,RH.	1	
-102	102361-00228	. . PIN,HINGE	2	
-103	50-110002-132	. . ANGLE,LH/STA 94/.	1	
	50-110002-133	. . ANGLE,RH/STA 94/.	1	
-104	50-110002-122	. . ANGLE,LH/STA 80/.	1	
	50-110002-123	. . ANGLE,RH/STA 80/.	1	
	95-110014-65	. . ANGLE,LH/STA 148/	1	
	95-110014-66	. . ANGLE,RH/STA 148/	1	
-105	35-115142-26	. . ANGLE,HINGE SPLICE/STA 108.281/	2	
	95-110014-83	. . ANGLE,LH/STA 36/.	1	
	95-110014-84	. . ANGLE,RH/STA 36/.	1	
	95-110014-93	. . ANGLE,LH/STA 122/	1	
	95-110014-94	. . ANGLE,RH/STA 122/	1	
	35-115276	. . CLIP,RH/STA 45/	3	
	95-110014-189	. . ANGLE,LH/STA 80 LINER ATTACH/	1	
	95-110014-190	. . ANGLE,RH/STA 80 LINER ATTACH/	1	
	95-110014-285	. . ANGLE,LH/STA 108/	1	
	95-110014-286	. . ANGLE,RH/STA 108/	1	
-106	35-115269	. . CLIP,LH STRINGER.	1	
	35-115269-1	. . CLIP,RH STRINGER.	1	
	108424-4	. . CLIP,LH STRINGER.	1	
-107	50727	. . BUTTON,PLUG	1	
	MS35489-6	. . GROMMET	15	
-108	95-110014-653	. . DOOR ASSY,LH/STA 87/.	1	
	95-110014-654	. . DOOR ASSY,RH/STA 87/.	1	
		/ATTACHING PARTS/		
-109	AN3-8A/M/	. . BOLT.	3	

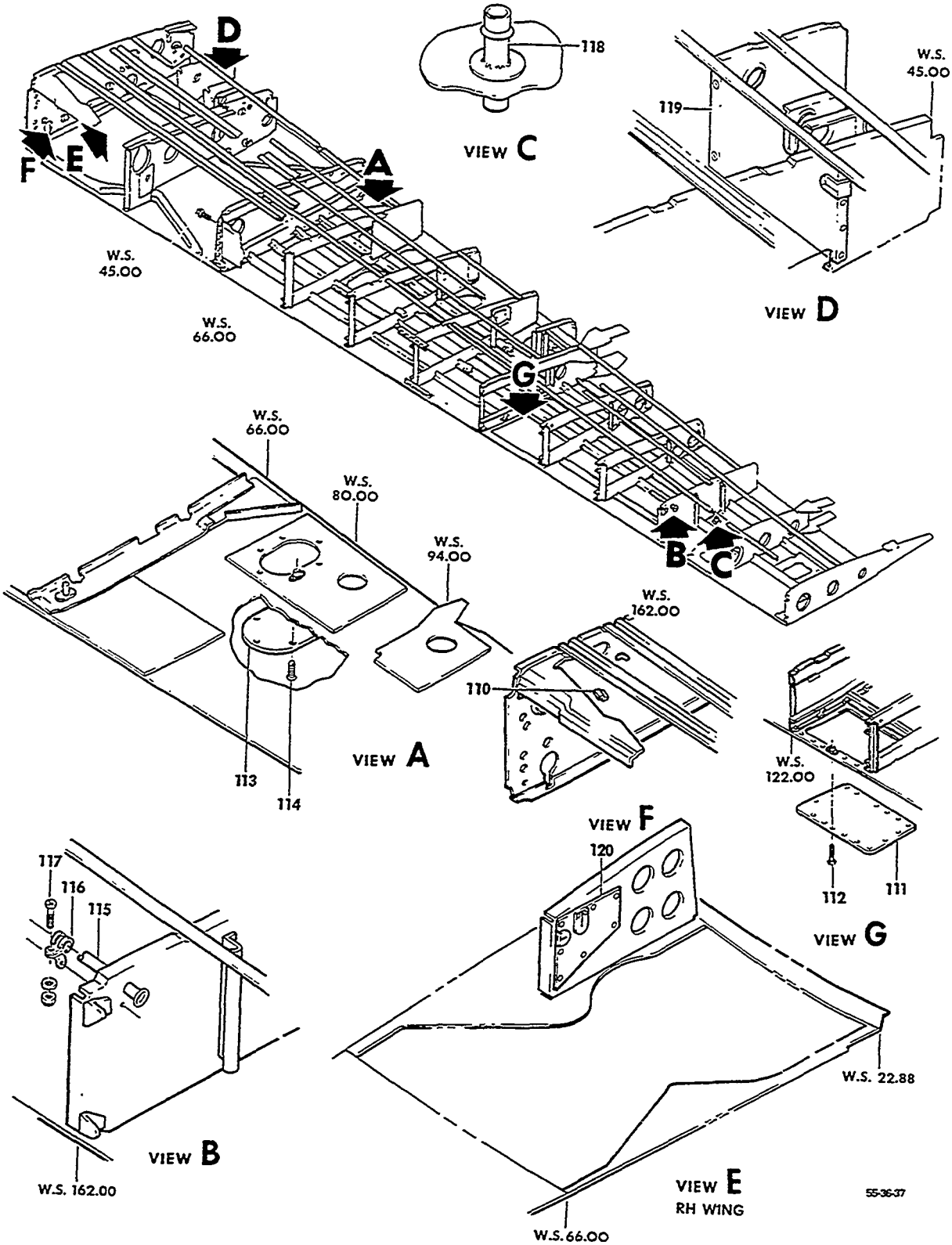

FIGURE 10-10.MAIN WING SECTION ASSY
/SHEET 10 OF 10 SHEETS/

ATA CODE & INDEX NO.	PART NO.	DESCRIPTION 1 2 3 4 5 6 7	UNITS PER ASSY	USABLE ON CODE
10-10	50-110002-134	. . . DOOR,LH/STA 87/	1	
	50-110002-135	. . . DOOR,RH/STA 87/	1	
	50-110002-140	. . . HINGE	2	
-110	95-110014-337	. . CLIP,LH	1	
	95-110014-345	. . CLIP.	1	
	MS35489-6	. . GROMMET	1	
-111	95-110024-1	. . DOOR ASSY,LH AUXILIARY TANK ACCESS.	1	7
	58-110011-1	. . DOOR ASSY,LH AUXILIARY TANK ACCESS.	1	6
	95-110024-2	. . DOOR ASSY,RH AUXILIARY TANK ACCESS.	1	7
	58-110011-2	. . DOOR ASSY,RH AUXILIARY TANK ACCESS.	1	6
		/ATTACHING PARTS/		
-112	AN509-8R8	. . SCREW	18	
		----*----		
-113	35-115199-12	. . DOOR,AILERON CABLE INSPECTION	1	
		/ATTACHING PARTS/		
-114	AN526-832-6	. . SCREW	6	
		----*----		
-115	95-110014-937	CONDUIT,WING WIRE ROUTING	1	
-116	766-6	CLAMP	5	
		/ATTACHING PARTS/		
-117	MS27039-0804	SCREW	5	
	AN960-8	WASHER.	5	
	MS20365-832	NUT	5	
		----*----		
	115005-1	GROMMET	8	
-118	50-920077	FLANGE ASSY,FUEL VENT/LH & RH/.	2	
-119	35-115264	COVER ASSY,FLAP LIMIT SWITCH LH	1	
-120	35-115256	COVER ASSY,FLAP ACTUATOR ACCESS RH.	1	

CODES OF EFFECTIVITY

1 TC-1 THRU TC-1607
2 TE-1 THRU TE-942 EXCEPT TE-938
3 TE-1 THRU TE-767
4 TC-1 THRU TC-25
5 TC-26 THRU TC-1607 TE-1 THRU TE-942 EXCEPT TE-938
6 TE-768 THRU TE-942 EXCEPT TE-938
7 TC-1 THRU TC-1607 TE-1 THRU TE-767
8 TC-26 THRU TC-1214 TE-1 THRU TE-683 EXCEPT TE-675
9 TC-1215 THRU TC-1607 TE-675 AND TE-684 THRU TE-942 EXCEPT TE-938
10 TC-133 THRU TC-1607 TE-1 THRU TE-942 EXCEPT TE-938
11 TC-1 THRU TC-954
12 TC-955 THRU TC-1607 TE-1 THRU TE-757
13 TE-758 THRU TE-942 EXCEPT TE-938

"END"

57-10-20
WING FRONT SPAR
TC-1 THRU TC-1442
TE-1 THRU TE-862

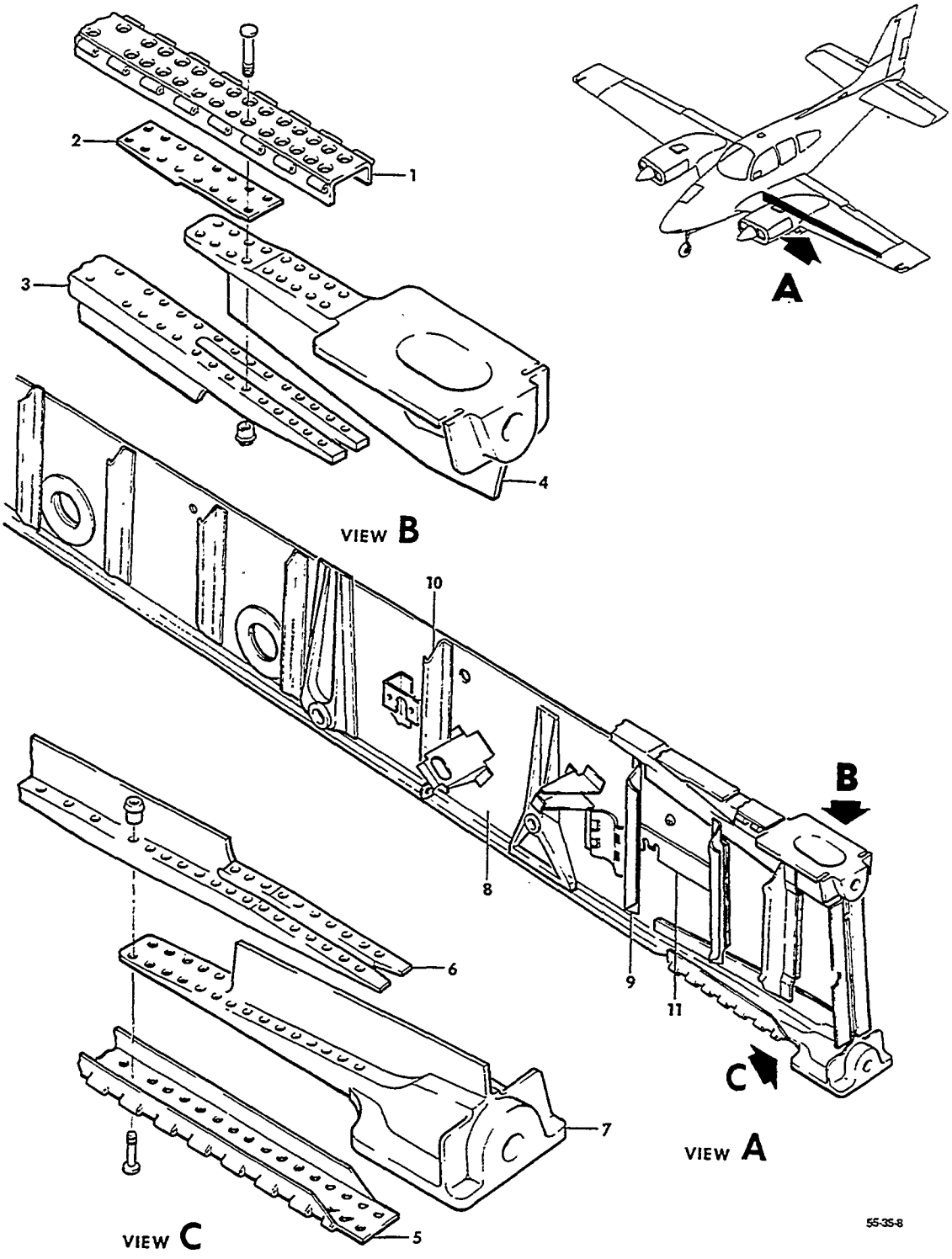

FIGURE 10-20.WING FRONT SPAR
/SHEET 1 OF 3 SHEETS/

ATA CODE & INDEX NO.	PART NO.	DESCRIPTION 1 2 3 4 5 6 7	UNITS PER ASSY	USABLE ON CODE
10-20	95-110013-1	SPAR ASSY,LH FRONT.	1	1
	96-110005-619	SPAR ASSY,LH FRONT.	1	2
	95-110013-2	SPAR ASSY,RH FRONT.	1	1
	96-110005-620	SPAR ASSY,RH FRONT.	1	2
	95-110013-607	. CAP ASSY,FRONT SPAR UPPER LH.	1	3
	95-110013-608	. CAP ASSY,FRONT SPAR UPPER RH.	1	3
- 1	50-110003-2	. . HINGE CAP,LH.	1	3
	50-110003-3	. . HINGE CAP,RH.	1	3
	50-110003-10	. . CHANNEL,LH.	1	3
	50-110003-11	. . CHANNEL,RH.	1	3
- 2	50-110003-22	. . FILLER.	1	3
- 3	95-110013-5	. . TEE,LH.	1	3
	95-110013-6	. . TEE,RH.	1	3
- 4	95-110013-13	. . FITTING,LH.	1	3
	95-110013-14	. . FITTING,RH.	1	3
	NAS1486-14	. . BOLT,LOCK	4	3
	NAS1486-15	. . BOLT,LOCK	2	3
	NAS1486-16	. . BOLT,LOCK	2	3
	NAS1486-17	. . BOLT,LOCK	4	3
	NAS1486-18	. . BOLT,LOCK	6	3
	NAS1486-19	. . BOLT,LOCK	6	3
	NAS1486-20	. . BOLT,LOCK	2	3
	NAS1080-6	. . COLLAR.	26	3
	95-110013-605	. CAP ASSY,FRONT SPAR LOWER LH.	1	3
	95-110013-606	. CAP ASSY,FRONT SPAR LOWER RH.	1	3
- 5	50-110003-4	. . HINGE CAP,LH.	1	3
	50-110003-5	. . HINGE CAP,RH.	1	3
	50-110003-12	. . CHANNEL,LH.	1	3
	50-110003-13	. . CHANNEL,RH.	1	3
	50-110003-22	. . FILLER.	1	3
- 6	95-110013-7	. . TEE,LH.	1	3
	95-110013-8	. . TEE,RH.	1	3
- 7	50-110057	. . FITTING,LH.	1	3
	50-110057-1	. . FITTING,RH.	1	3
	NAS1486-11	. . BOLT,LOCK	2	3
	NAS1486-12	. . BOLT,LOCK	2	3
	NAS1486-13	. . BOLT,LOCK	2	3
	NAS1486-14	. . BOLT,LOCK	2	3
	NAS1486-15	. . BOLT,LOCK	4	3
	NAS1486-16	. . BOLT,LOCK	8	3
	NAS1486-17	. . BOLT,LOCK	8	3
	NAS1080-6	. . COLLAR.	28	3
	95-110013-609	. WEB ASSY,FRONT SPAR INBD LH	1	3
	95-110013-610	. WEB ASSY,FRONT SPAR INBD RH	1	3
- 8	95-110013-9	. . WEB,LH.	1	3
	95-110013-10	. . WEB,RH.	1	3
	95-110013-11	. . WEB,LH.	1	3
	95-110013-12	. . WEB,RH.	1	3
- 9	50-110003-32	. . STIFFENER	1	4
	95-110013-21	. . STIFFENER,LH.	1	5
	95-110013-22	. . STIFFENER,RH.	1	5
- 10	50-110003-36	. . STIFFENER	1	3
	35-115020-74	. . BRACKET	1	6
	95-110013-23	. . BRACKET,LH.	1	7
	95-110013-24	. . BRACKET,RH.	1	7
- 11	95-920001-153	. . BRACKET,FUEL BOOST PUMP	1	6
	96-920016-5	. . BRACKET ASSY,FUEL BOOST PUMP LH	1	7
	96-920016-7	. . BRACKET ASSY,FUEL BOOST PUMP RH	1	7

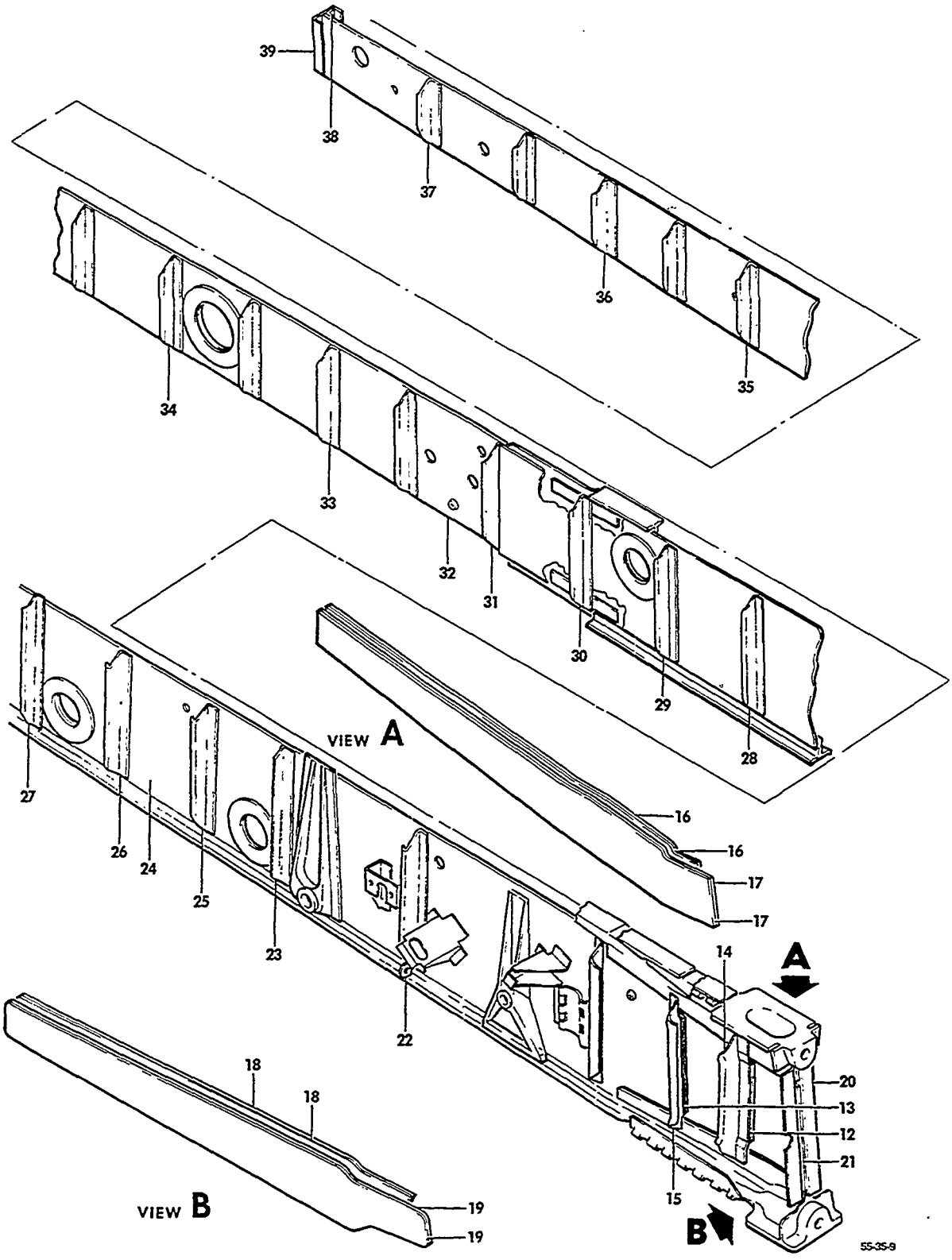

FIGURE 10-20.WING FRONT SPAR
/SHEET 2 OF 3 SHEETS/

ATA CODE & INDEX NO.	PART NO.	DESCRIPTION 1 2 3 4 5 6 7	UNITS PER ASSY	USABLE ON CODE
10-20 - 12	50-110003-24	. SPACER.	1	3
- 13	50-110003-28	. SPACER.	1	3
- 14	50-110003-26	. STIFFENER,LH.	1	3
	50-110003-27	. STIFFENER,RH.	1	3
- 15	50-110003-30	. STIFFENER,LH.	1	3
	50-110003-31	. STIFFENER,RH.	1	3
- 16	50-110003-14	. PLATE,TIE UPPER	1	3
- 17	50-110003-16	. PLATE,TIE UPPER	1	3
- 18	50-110003-18	. PLATE,TIE LOWER	1	3
- 19	50-110003-20	. PLATE,TIE LOWER	1	3
	NAS1466-4	. BOLT,LOCK	2	3
	NAS1466-5	. BOLT,LOCK	2	3
	NAS1466-10	. BOLT,LOCK	6	3
	NAS1466-12	. BOLT,LOCK	48	3
	NAS1466-13	. BOLT,LOCK	5	3
	NAS1080-6	. COLLAR.	63	3
- 20	50-110003-86	. ANGLE,LH.	1	3
	50-110003-87	. ANGLE,RH.	1	3
- 21	50-110003-90	. SPACER.	1	3
- 22	35-115020-74	. BRACKET	1	6
	95-110013-23	. BRACKET,LH.	1	7
	95-110013-24	. BRACKET,RH.	1	7
- 23	95-110013-19	. ANGLE,LH.	1	3
	95-110013-20	. ANGLE,RH.	1	3
	95-110013-611	. WEB ASSY,FRONT SPAR CENTER LH	1	3
	95-110013-612	. WEB ASSY,FRONT SPAR CENTER RH	1	3
- 24	95-110013-15	. . WEB	1	3
- 25	50-110003-42	. . STIFFENER	1	3
- 26	50-110003-44	. . STIFFENER	1	3
- 27	50-110003-46	. . STIFFENER	1	3
- 28	50-110003-48	. . STIFFENER	1	3
- 29	50-110003-50	. . STIFFENER	1	3
- 30	50-110003-52	. . STIFFENER	1	3
- 31	50-110003-54	. STIFFENER	1	3
	95-110013-613	. WEB ASSY,FRONT SPAR LH OUTBD.	1	3
	95-110013-614	. WEB ASSY,FRONT SPAR RH OUTBD.	1	3
- 32	50-110003-62	. . WEB	1	3
- 33	50-110003-66	. . STIFFENER	1	3
- 34	50-110003-70	. . STIFFENER	1	3
- 35	50-110003-74	. . STIFFENER	1	3
- 36	50-110003-78	. . STIFFENER	1	3
- 37	50-110003-82	. . STIFFENER	1	3
- 38	50-110003-84	. . STIFFENER	1	3
	95-110013-615	. STIFFENER ASSY,FRONT SPAR LH.	1	3
	95-110013-616	. STIFFENER ASSY,FRONT SPAR RH.	1	3
- 39	35-115020-8	. . STIFFENER,LH.	1	3
	35-115020-9	. . STIFFENER,RH.	1	3
	H1S832BC100X200	. . NUTPLATE.	8	3

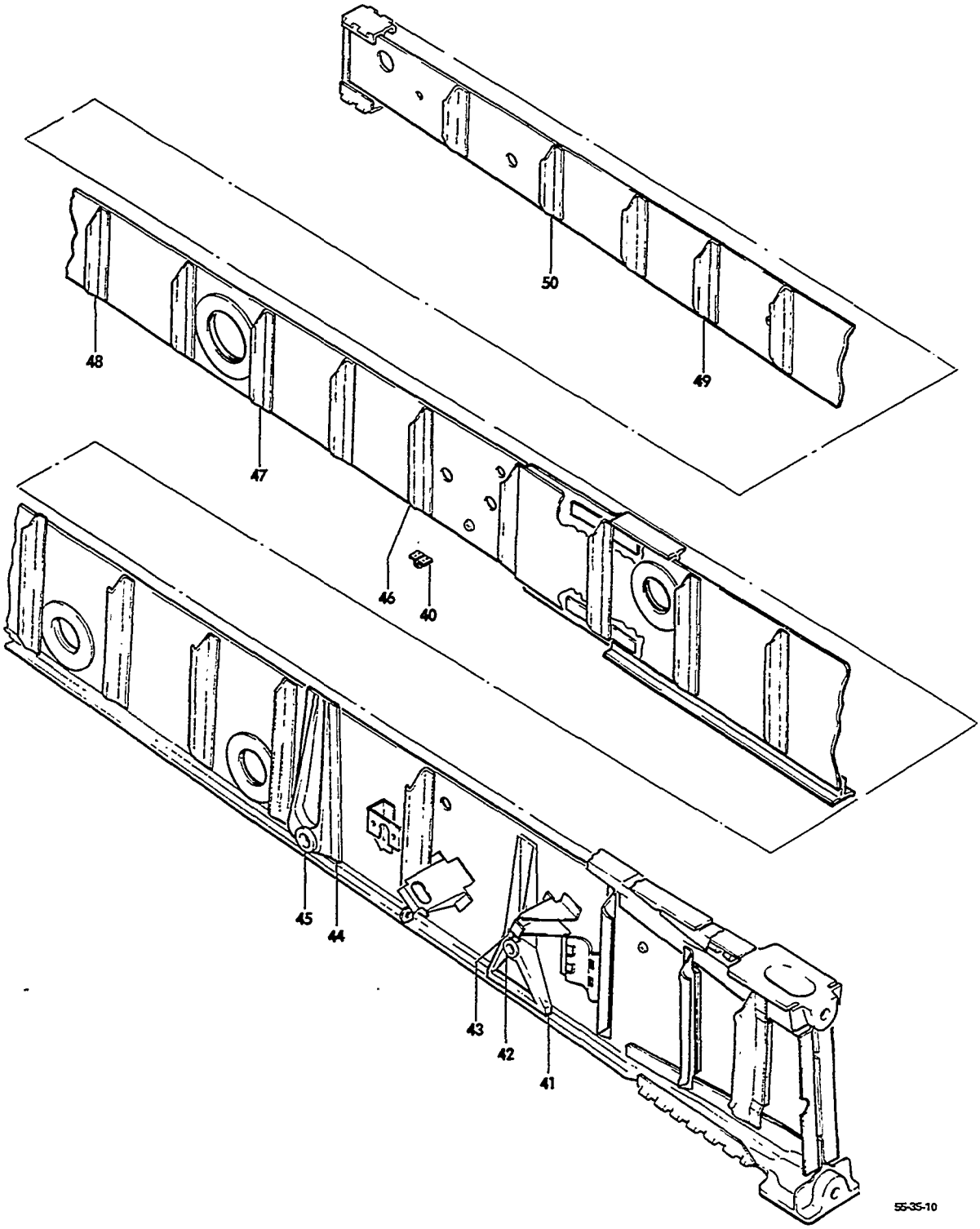

FIGURE 10-20.WING FRONT SPAR
/SHEET 3 OF 3 SHEETS/

ATA CODE & INDEX NO.	PART NO.	DESCRIPTION 1 2 3 4 5 6 7	UNITS PER ASSY	USABLE ON CODE
10-20 - 40	35-115232	LUG ASSY,TIE DOWN	1	3
		/ATTACHING PARTS/		
	NAS221-9	SCREW	4	
	22A17-02	NUTPLATE	4	
		*		
	35-110061-67	FITTING ASSY,FRONT SPAR	1	3
		/ATTACHING PARTS/		
	ALPPH-T6-7	HUCKBOLT	7	
	LC-C6	COLLAR	7	
		*		
- 41	35-110061-69	FITTING	1	3
- 42	35-115184	BUSHING	1	3
- 43	MS15001-4	FITTING,LUBRICATION	1	3
	95-110013-3	FITTING ASSY,FRONT SPAR	1	3
		/ATTACHING PARTS/		
	AN3-6A/M/	BOLT	4	
	AN960-10	WASHER	8	
	AN365-1032	NUT	4	
		*		
- 44	95-110013-17	FITTING	1	3
- 45	35-115215	BUSHING	1	3
	MK1031-832	KAYLOCK	4	3
	MK2031-832	KAYLOCK	4	3
	MS35489-6	GROMMET	1	3
- 46	50-110003-64	STIFFENER,LH	1	3
	50-110003-65	STIFFENER,RH	1	3
- 47	50-110003-68	STIFFENER,LH	1	3
	50-110003-69	STIFFENER,RH	1	3
- 48	50-110003-72	STIFFENER,LH	1	3
	50-110003-73	STIFFENER,RH	1	3
- 49	50-110003-76	STIFFENER,LH	1	3
	50-110003-77	STIFFENER,RH	1	3
- 50	50-110003-80	STIFFENER	1	3
	50-110003-81	STIFFENER	1	3

CODES OF EFFECTIVITY

1 TC-1 THRU TC-1442
TE-1 THRU TE-767

2 TE-768 THRU TE-862

3 TC-1 THRU TC-1442
TE-1 THRU TE-862

4 TC-1 THRU TC-350

5 TC-351 THRU TC-1442
TE-1 THRU TE-862

6 TC-1 THRU TC-487

7 TC-488 THRU TC-1442
TE-1 THRU TE-862

"END"

57-10-21
WING FRONT SPAR
TC-1443 THRU TC-1607
TE-863 THRU TE-942 EXCEPT TE-938

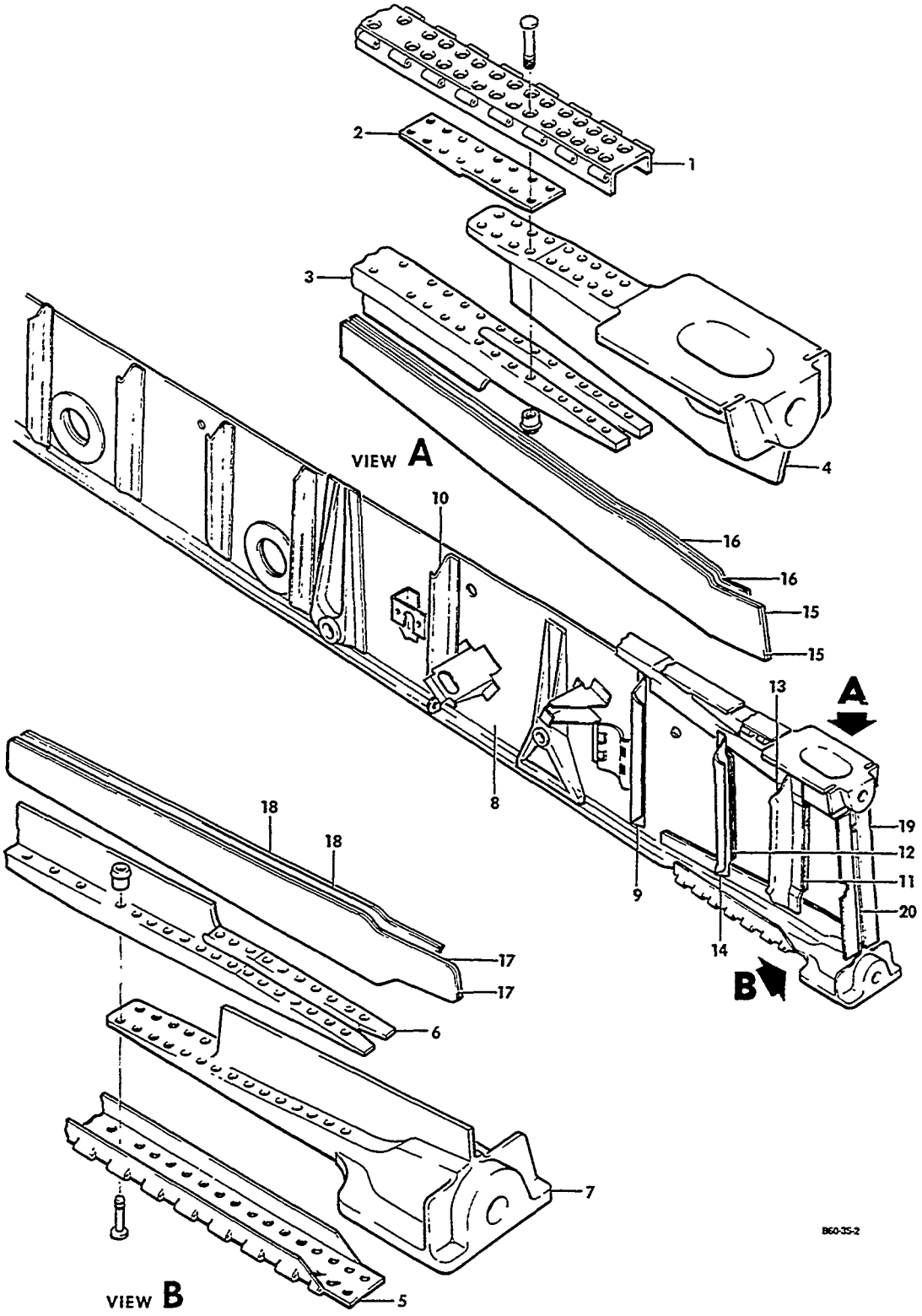

FIGURE 10-21.WING FRONT SPAR
/SHEET 1 OF 2 SHEETS/

ATA CODE & INDEX NO.	PART NO.	DESCRIPTION 1 2 3 4 5 6 7	UNITS PER ASSY	USABLE ON CODE
10-21	000-110011-3	SPAR ASSY,LH FRONT.	1	1
	000-110011-4	SPAR ASSY,RH FRONT.	1	1
	000-110011-1	. SPAR ASSY,LH.	1	1
	000-110011-2	. SPAR ASSY,RH.	1	1
	000-110013-1	. . CAP ASSY,FRONT SPAR UPPER LH.	1	1
	000-110013-2	. . CAP ASSY,FRONT SPAR UPPER RH.	1	1
- 1	000-110013-9	. . . HINGE CAP,LH.	1	1
	000-110013-10	. . . HINGE CAP,RH.	1	1
- 2	000-110013-7	. . . FILLER.	1	1
- 3	000-110013-11	. . . TEE,LH.	1	1
	000-110013-12	. . . TEE,RH.	1	1
- 4	000-110087-1	. . . FITTING,LH.	1	1
	000-110087-2	. . . FITTING,RH.	1	1
	NAS1486-14	. . . BOLT,LOCK	4	1
	NAS1486-15	. . . BOLT,LOCK	2	1
	NAS1486-16	. . . BOLT,LOCK	2	1
	NAS1486-17	. . . BOLT,LOCK	4	1
	NAS1486-18	. . . BOLT,LOCK	6	1
	NAS1486-19	. . . BOLT,LOCK	6	1
	NAS1486-20	. . . BOLT,LOCK	2	1
	NAS1080-6	. . . COLLAR.	26	1
	000-110013-3	. . CAP ASSY,FRONT SPAR LOWER LH.	1	1
	000-110013-4	. . CAP ASSY,FRONT SPAR LOWER RH.	1	1
- 5	000-110013-15	. . . HINGE CAP,LH.	1	1
	000-110013-16	. . . HINGE CAP,RH.	1	1
	MS21051-3	. . . NUTPLATE.	4	1
- 6	000-110013-13	. . . TEE,LH.	1	1
	000-110013-14	. . . TEE,RH.	1	1
	35-110065-1	. . . FITTING,LH.	1	1
	35-110065-2	. . . FITTING,RH.	1	1
- 7	000-110088-1	. . . FITTING,LH.	1	1
	000-110088-2	. . . FITTING,RH.	1	1
	NAS1486-11	. . . BOLT,LOCK	2	1
	NAS1486-12	. . . BOLT,LOCK	2	1
	NAS1486-13	. . . BOLT,LOCK	2	1
	NAS1486-14	. . . BOLT,LOCK	2	1
	NAS1486-15	. . . BOLT,LOCK	6	1
	NAS1486-16	. . . BOLT,LOCK	8	1
	NAS1486-17	. . . BOLT,LOCK	8	1
	NAS1080-6	. . . COLLAR.	30	1
	000-110014-1	. . WEB ASSY,FRONT SPAR INBOARD LH.	1	1
	000-110014-2	. . WEB ASSY,FRONT SPAR INBOARD RH.	1	1
- 8	000-110014-5	. . . WEB,LH.	1	1
	000-110014-6	. . . WEB,RH.	1	1
- 9	000-110014-7	. . . STIFFENER	1	1
- 10	000-110014-9	. . . STIFFENER	1	1
- 11	000-110011-9	. . SPACER.	1	1
- 12	000-110011-11	. . SPACER.	1	1
- 13	000-110010-39	. . STIFFENER,LH.	1	1
	000-110011-40	. . STIFFENER,RH.	1	1
- 14	000-110011-41	. . STIFFENER	1	1
- 15	000-110095-1	. . PLATE,TIE UPPER	2	1
- 16	000-110095-3	. . PLATE,TIE UPPER	1	1
- 17	000-110024-1	. . PLATE,TIE LOWER	2	1
- 18	000-110024-3	. . PLATE,TIE LOWER	2	1
- 19	000-110010-35	. . ANGLE,LH.	1	1
	000-110010-36	. . ANGLE,RH.	1	1
- 20	000-110010-37	. . SPACER.	1	1

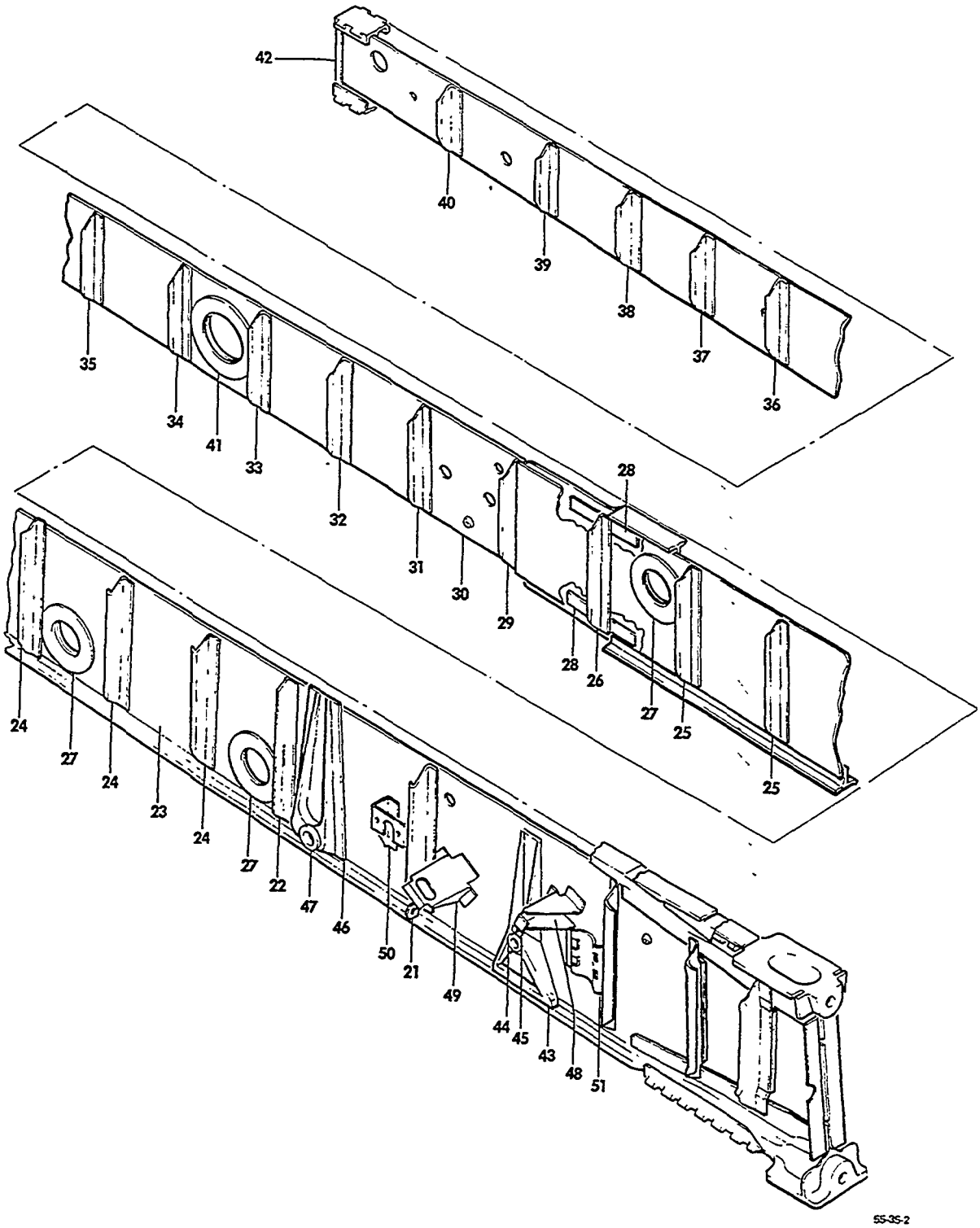

FIGURE 10-21.WING FRONT SPAR
/SHEET 2 OF 2 SHEETS/

SUB-SECT UNIT & ITEM NO.	PART NO.	DESCRIPTION 1 2 3 4 5 6 7	UNITS PER ASSY	USABLE ON CODE
10-21	MS35489-6	GROMMET	2	1
	HL18PB6-5	PIN	4	1
	NAS679A3	NUT	4	1
- 21	000-110010-55	BRACKET	1	1
- 22	D23217-1	ANGLE	1	1
	000-110010-3	WEB ASSY,FRONT SPAR CENTER LH	1	1
	000-110010-4	WEB ASSY,FRONT SPAR CENTER RH	1	1
- 23	000-110010-5	WEB	1	1
- 24	000-110010-7	STIFFENER	3	1
- 25	000-110010-9	STIFFENER	2	1
- 26	000-110010-11	STIFFENER	1	1
- 27	000-110010-51	RING,REINFORCEMENT.	3	1
	MS35489-6	GROMMET	1	1
- 28	000-110010-53	REINFORCEMENT	2	1
	MS21061L4	NUTPLATE.	2	1
- 29	000-110010-45	STIFFENER	1	1
	000-110011-13	WEB ASSY,FRONT SPAR LH OUTBD.	1	1
	000-110011-14	WEB ASSY,FRONT SPAR RH OUTBD.	1	1
- 30	000-110010-15	WEB	1	1
- 31	000-110010-17	STIFFENER	1	1
- 32	000-110010-19	STIFFENER	1	1
- 33	000-110010-21	STIFFENER	1	1
- 34	000-110010-23	STIFFENER	1	1
- 35	000-110010-25	STIFFENER	1	1
- 36	000-110011-15	STIFFENER	1	1
- 37	000-110010-27	STIFFENER	1	1
- 38	000-110011-17	STIFFENER	1	1
- 39	000-110010-29	STIFFENER	1	1
- 40	000-110011-19	STIFFENER	1	1
- 41	000-110010-47	REINFORCEMENT	1	1
	D08431-1	DOUBLER	1	1
- 42	000-110028-1	STIFFENER,LH.	1	1
	000-110028-2	STIFFENER,RH.	1	1
	MS21047L08	NUTPLATE.	2	1
	NAS1080-6	COLLAR.	68	1
	NAS1466-4	BOLT,LOCK	2	1
	NAS1466-4	BOLT,LOCK	2	1
	NAS1466-10	BOLT,LOCK	6	1
	NAS1466-12	BOLT,LOCK	48	1
	NAS1466-13	BOLT,LOCK	5	1
	000-110022-1	PLATE ASSY,LANDING GEAR RETRACT	1	1
- 43	000-110022-3	PLATE,BUSHING	1	1
- 44	35-115184	BUSHING	1	1
- 45	R MS15001-3	FITTING,LUBE.	1	1
	000-110023-1	PLATE ASSY,LANDING GEAR ATTACH.	1	1
- 46	000-110023-3	PLATE,BUSHING	1	1
- 47	35-115215	BUSHING	1	1
- 48	000-361010-1	BRACKET,LANDING GEAR SWITCH	1	1
- 49	000-361011-1	BRACKET,LANDING GEAR SWITCH LH.	1	1
	000-361011-2	BRACKET,LANDING GEAR SWITCH RH.	1	1
- 50	000-920010-1	BRACKET,FUEL STRAINER	1	1
- 51	000-920011-1	BRACKET,FUEL BOOST PUMP	1	1

CODES OF EFFECTIVITY

1 TC-1443 THRU TC-1607
TE-863 THRU TE-942
EXCEPT TE-938

"END"

57-10-30
WING REAR SPAR

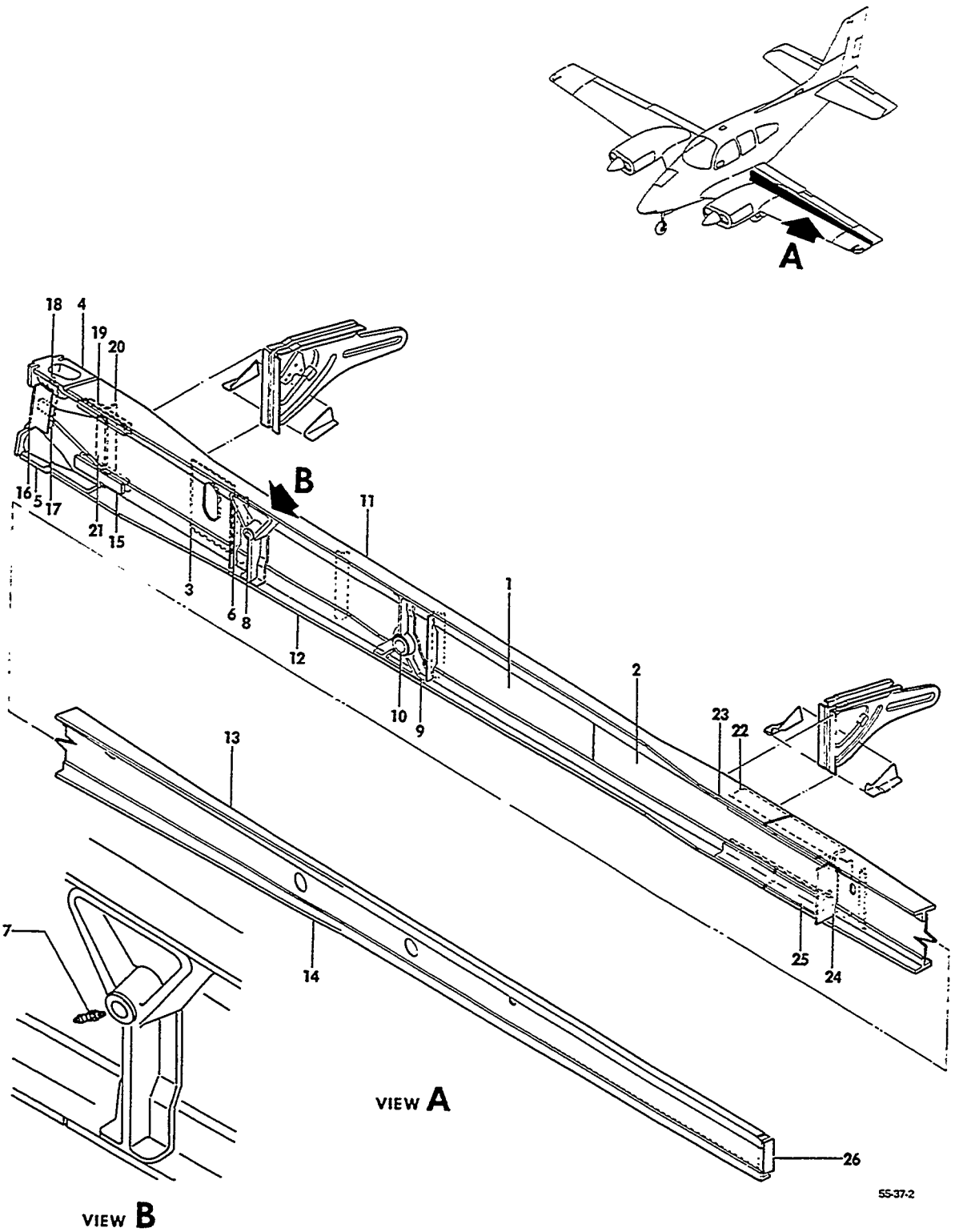

FIGURE 10-30.REAR SPAR ASSY,WING
/SHEET 1 OF 2 SHEETS/

ATA CODE & INDEX NO.	PART NO.	DESCRIPTION 1 2 3 4 5 6 7	UNITS PER ASSY	USABLE ON CODE
10-30	95-110022-601	SPAR ASSY,REAR LH	1	1
	95-110022-611	SPAR ASSY,REAR LH	1	2
	95-110022-602	SPAR ASSY,REAR RH	1	1
	95-110022-612	SPAR ASSY,REAR RH	1	2
	95-110022-605	. WEB ASSY,LH	1	
	95-110022-606	. WEB ASSY,RH	1	
- 1	95-110022-11	. . WEB,LH SPAR INBOARD	1	
	95-110022-12	. . WEB,RH SPAR INBOARD	1	
- 2	95-110022-13	. . WEB,LH SPAR OUTBOARD	1	
	95-110022-14	. . WEB,RH SPAR OUTBOARD	1	
- 3	95-110022-65	. . REINFORCEMENT	1	
	95-110022-66	. . REINFORCEMENT	1	
- 4	95-110016-1	. FITTING,UPPER LH SPAR	1	
	95-110016-2	. FITTING,UPPER RH SPAR	1	
- 5	95-110017-1	. FITTING,LOWER LH SPAR	1	
	95-110017-2	. FITTING,LOWER RH SPAR	1	
	95-110019-1	. ADAPTER ASSY,LH DRAG LEG HINGE POINT AFT	1	
	95-110019-2	. ADAPTER ASSY,RH DRAG LEG HINGE POINT AFT	1	
- 6	95-110019-3	. . ADAPTER,LH	1	
	95-110019-4	. . ADAPTER,RH	1	
- 7	MS15001-4	. . FITTING,LUBRICATION	1	
- 8	35-115062	. . BUSHING	1	
	95-110020-1	. ADAPTER ASSY,LH MAIN GEAR HINGE POINT AFT	1	
	95-110020-2	. ADAPTER ASSY,RH MAIN GEAR HINGE POINT AFT	1	
- 9	95-110020-3	. . ADAPTER,LH	1	
	95-110020-4	. . ADAPTER,RH	1	
- 10	45-115064	. . BUSHING	1	
- 11	95-110022-3	. CAP,UPPER LH	1	
	95-110022-4	. CAP,UPPER RH	1	
- 12	95-110022-5	. CAP,LOWER LH	1	
	95-110022-6	. CAP,LOWER RH	1	
- 13	95-110022-7	. CAP,UPPER LH	1	
	95-110022-8	. CAP,UPPER RH	1	
- 14	95-110022-9	. CAP,LOWER LH	1	
	95-110022-10	. CAP,LOWER RH	1	
- 15	95-110022-17	. STRAP,LOWER	2	
- 16	95-110022-19	. ANGLE,FWD	1	
- 17	95-110022-21	. SPACER	1	
- 18	95-110022-23	. ANGLE,AFT	1	
- 19	95-110022-73	. STRAP,UPPER	2	
- 20	95-110022-25	. ANGLE,LH	1	
	95-110022-26	. ANGLE,RH	1	
- 21	95-110022-27	. SPACER	1	
- 22	95-110022-29	. ANGLE	1	
- 23	95-110022-31	. ANGLE	1	
- 24	95-110022-33	. ANGLE	1	
- 25	95-110022-35	. ANGLE	1	
- 26	95-110022-67	. ANGLE	1	

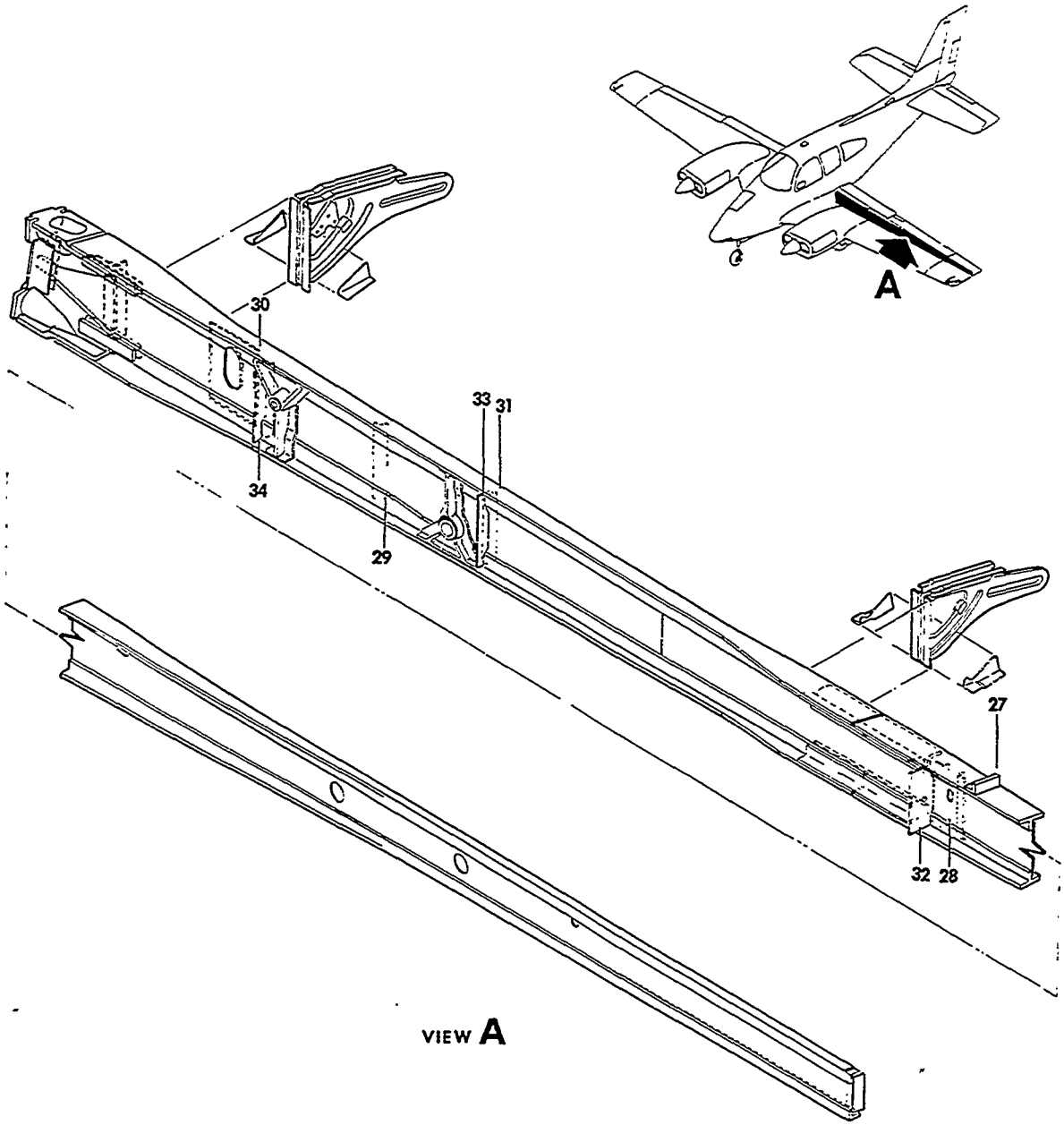

55-37-3

FIGURE 10-30.REAR SPAR ASSY,WING
/SHEET 2 OF 2 SHEETS/

ATA CODE & INDEX NO.	PART NO.	DESCRIPTION 1 2 3 4 5 6 7	UNITS PER ASSY	USABLE ON CODE
10-30 - 27	45-115075-45	ANGLE,LH.	1	
	SLS100T8-9	STUMP RIVET	20	
	6LC-C8	COLLAR.	20	
	SLSP-T8-12	BOLT,HUCK	2	
	SLSP-T8-11	BOLT,HUCK	10	
	6LC-C8	COLLAR.	12	
	ALPPH-T6-6	BOLT,HUCK	10	
	LC-C6	COLLAR.	10	
- 28	95-110014-123	ANGLE,STA 108 TRAILING EDGE RIB LH.	1	
	95-110014-124	ANGLE,STA 108 TRAILING EDGE RIB RH.	1	
- 29	95-110014-125	ANGLE,STA 55 TRAILING EDGE RIB LH	1	
	95-110014-126	ANGLE,STA 55 TRAILING EDGE RIB RH	1	
- 30	95-110014-131	ANGLE,STA 45 TRAILING EDGE RIB LH	1	
	95-110014-132	ANGLE,STA 45 TRAILING EDGE RIB RH	1	
- 31	95-110014-155	ANGLE,STA 66 TRAILING EDGE RIB LH	1	
	95-110014-156	ANGLE,STA 66 TRAILING EDGE RIB RH	1	
- 32	95-110014-299	ANGLE,STA 108 MAIN RIB LH	1	
	95-110014-300	ANGLE,STA 108 MAIN RIB RH	1	
- 33	95-110023-23	ANGLE,STA 66 MAIN RIB LH.	1	
	95-110023-24	ANGLE,STA 66 MAIN RIB RH.	1	
- 34	95-110026-3	ANGLE,STA 45 MAIN RIB LH.	1	
	95-110027-3	ANGLE,STA 45 MAIN RIB RH.	1	

CODES OF EFFECTIVITY

1 TC-1 THRU TC-954

2 TC-955 THRU TC-1607
TE-1 THRU TE-942
EXCEPT TE-938

"END"

57-20-01
LEADING EDGE AND FRONT SPAR ASSEMBLY

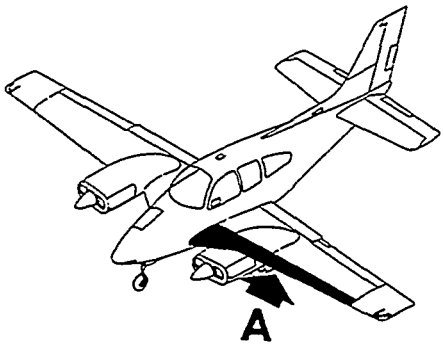

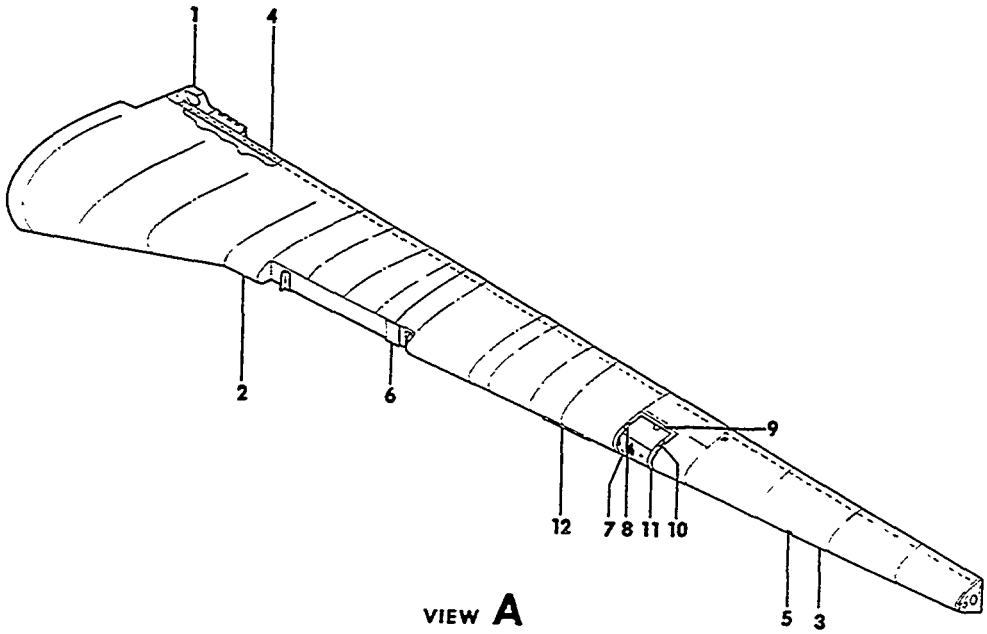

55-33-17

FIGURE 20-01.LEADING EDGE AND FRONT SPAR ASSY
/SHEET 1 OF 2 SHEETS/

SUB-SECT UNIT & ITEM NO.	PART NO.	DESCRIPTION 1 2 3 4 5 6 7	UNITS PER ASSY	USABLE ON CODE
20-01	96-110005-603	LEADING EDGE AND FRONT SPAR ASSY,LH/COMPLETE/ .	1	1
	96-110005-605	LEADING EDGE AND FRONT SPAR ASSY,LH/COMPLETE/ .	1	2
	96-110005-623	LEADING EDGE AND FRONT SPAR ASSY,LH/COMPLETE/ .	1	3
	96-110005-683	LEADING EDGE AND FRONT SPAR ASSY,LH/LESS FUEL . CELL/SPECIFY CAPACITY/	1	1
	96-110005-687	LEADING EDGE AND FRONT SPAR ASSY,LH/LESS FUEL . CELL/SPECIFY CAPACITY/	1	2
	96-110005-604	LEADING EDGE AND FRONT SPAR ASSY,RH/COMPLETE/ .	1	1
	96-110005-606	LEADING EDGE AND FRONT SPAR ASSY,RH/COMPLETE/ .	1	2
	96-110005-624	LEADING EDGE AND FRONT SPAR ASSY,RH/COMPLETE/ .	1	3
	96-110005-684	LEADING EDGE AND FRONT SPAR ASSY,RH/LESS FUEL . CELL/SPECIFY CAPACITY/	1	1
	96-110005-688	LEADING EDGE AND FRONT SPAR ASSY,RH/LESS FUEL . CELL/SPECIFY CAPACITY/	1	2
- 1	95-110013-1	. FRONT SPAR ASSY,LH/SEE CHAPTER 57-10-20/. . .	1	4
	95-110005-619	. FRONT SPAR ASSY,LH/SEE CHAPTER 57-10-20/. . .	1	11
	000-110011-3	. FRONT SPAR ASSY,LH/SEE CHAPTER 57-10-21/. . .	1	5
	95-110013-2	. FRONT SPAR ASSY,RH/SEE CHAPTER 57-10-20/. . .	1	4
	95-110005-620	. FRONT SPAR ASSY,RH/SEE CHAPTER 57-10-20/. . .	1	11
	000-110011-4	. FRONT SPAR ASSY,RH/SEE CHAPTER 57-10-21/. . .	1	5
- 2	95-110041-601	. INBOARD LEADING EDGE ASSY,LH/SEE 57-20-05/. .	1	1
	96-110007-603	. INBOARD LEADING EDGE ASSY,LH/SEE 57-20-06/. .	1	6
	95-110041-602	. INBOARD LEADING EDGE ASSY,RH/SEE 57-20-05/. .	1	1
	96-110007-604	. INBOARD LEADING EDGE ASSY,RH/SEE 57-20-06/. .	1	6
- 3	95-110041-605	. OUTBOARD LEADING EDGE ASSY,LH/SEE 57-20-10/ .	1	1
	96-110007-605	. OUTBOARD LEADING EDGE ASSY,LH/SEE 57-20-12/ .	1	6
	95-110041-606	. OUTBOARD LEADING EDGE ASSY,RH/SEE 57-20-10/ .	1	1
	96-110007-606	. OUTBOARD LEADING EDGE ASSY,RH/SEE 57-20-12/ .	1	6
- 4	50-110010-48	. SPLICE,TOP.	1	
	50-110010-49	. SPLICE,BOTTOM	1	
	50-110010-602	. DOUBLER ASSY,LH LEADING EDGE.	1	1
	50-110010-603	. DOUBLER ASSY,RH LEADING EDGE.	1	1
- 5	151-3	. DETECTOR UNIT,STALL WARNING/WITHOUT DEICER/ .	1	
	168-3	. DETECTOR UNIT,STALL WARNING/WITH DEICER/. . .	1	
	R 04407-2	. . ELEMENT,STALL WARNING DETECTOR HEATER . . . /ATTACHING PARTS/	1	
	AN507-6R8	. SCREW	4	
- 6	95-110015-93	. SPLICE,LH	1	
	95-110015-94	. SPLICE,RH	1	
- 7	45-115136-2	. LENS,LANDING LIGHT LH	1	1
	45-115136-3	. LENS,LANDING LIGHT RH	1	1
- 8	45-115136-4	. EXTRUSION	1	1
- 9	45-115136-6	. EXTRUSION	2	1
- 10	45-115136-8	. EXTRUSION	1	1
- 11	45-115138-1	. FRAME,LH.	1	1
	45-115138-2	. FRAME,RH.	1	1
- 12	95-110015-155	. FAIRING,STALL STRIP LH.	1	

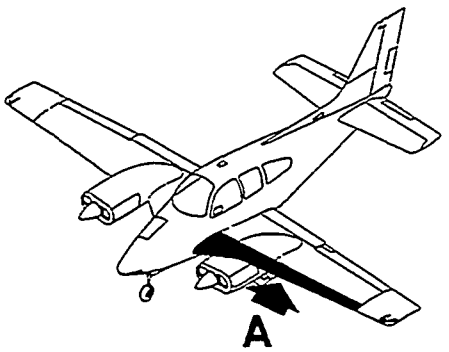

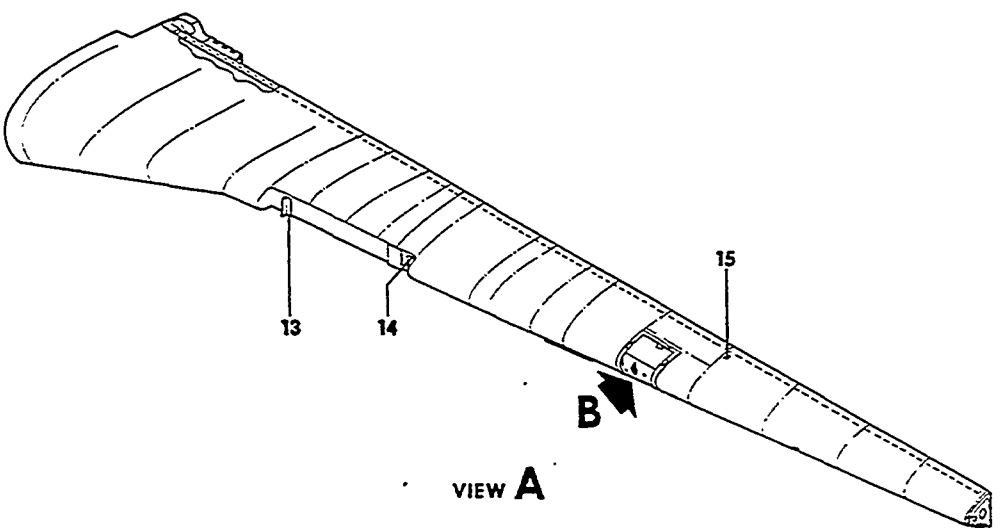

VIEW A

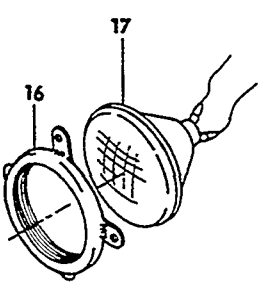

VIEW B

55-33-18

FIGURE 20-01 LEADING EDGE AND FRONT SPAR ASSY
/SHEET 2 OF 2 SHEETS/

ATA CODE & INDEX NO.	PART NO.	DESCRIPTION 1 2 3 4 5 6 7	UNITS PER ASSY	USABLE ON CODE
20-01 - 13	95-980001-201	ANGLE,LH.	1	
	95-980001-202	ANGLE,RH.	1	
- 14	95-980001-205	ANGLE,LH.	1	
	95-980001-206	ANGLE,RH.	1	
- 15	B111745X	JACK,GROUNDING.	1	1
	95-360011-647	WIRE ASSY,LH WING	1	7
	96-360011-661	WIRE ASSY,LH WING	1	8
	96-360011-663	WIRE ASSY,LH WING	1	9
	95-360011-648	WIRE ASSY,RH WING	1	7
	96-360011-662	WIRE ASSY,RH WING	1	8
	96-360011-664	WIRE ASSY,RH WING	1	9
- 16	45-115018	CLAMP	1	1
		/ATTACHING PARTS/		
	AN515-8R8	SCREW	4	
	AN520-10R8	SCREW	1	
	AN960-8	WASHER.	4	
	AN960D10	WASHER.	1	
	AN365-1032	NUT	1	
		——*——		
- 17	4553	LAMP,LANDING LIGHT/SUPERSEDES 4523/	1	1
	95-360011-654	WIRE ASSY,FUEL TRANSMITTER.	1	7
	96-360011-660	WIRE ASSY,FUEL TRANSMITTER.	1	10

CODES OF EFFECTIVITY

1	TC-1 THRU TC-399	2	TC-400 THRU TC-1607
3	TE-1 THRU TE-942 EXCEPT TE-938	4	TC-1 THRU TC-1442 TE-1 THRU TE-767
5	TC-1443 THRU TC-1607 TE-863 THRU TE-942 EXCEPT TE-938	6	TC-400 THRU TC-1607 TE-1 THRU TE-942 EXCEPT TE-938
7	TC-1 THRU TC-375	8	TC-376 THRU TC-1298 TE-1 THRU TE-942 EXCEPT TE-938
9	TC-1299 THRU TC-1607	10	TC-376 THRU TC-1607 TE-1 THRU TE-942 EXCEPT TE-938
11	TE-768 THRU TE-862		

"END"

57-20-05
WING INBOARD LEADING EDGE
TC-1 THRU TC-399

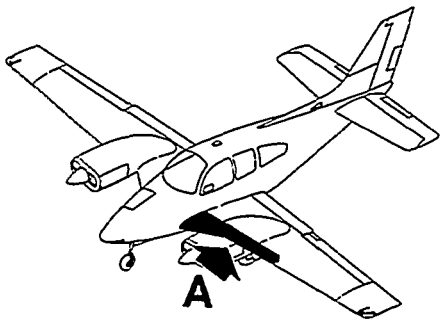

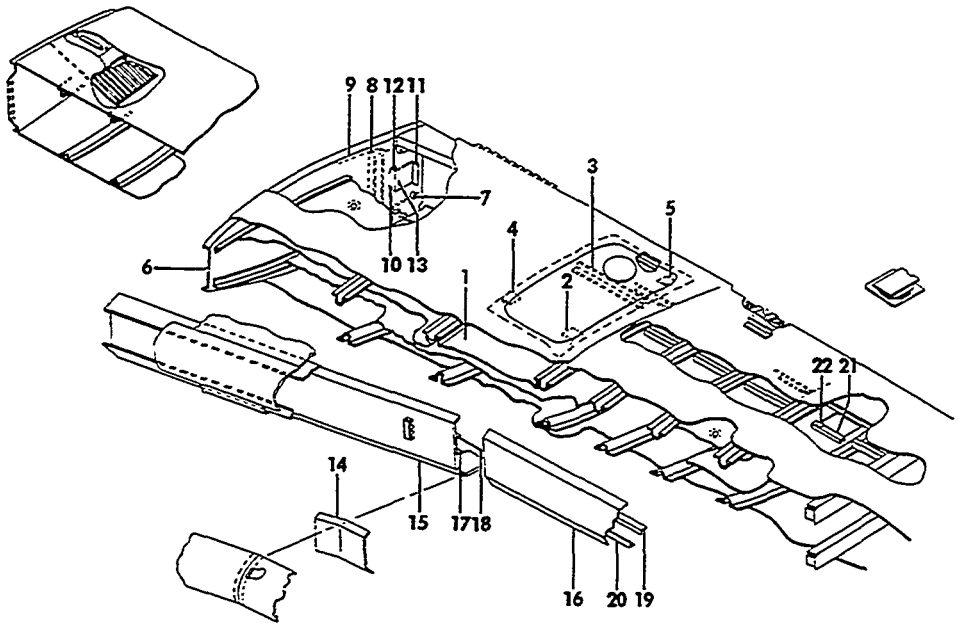

VIEW A

55-33-19

FIGURE 20-05.INBOARD LEADING EDGE
/SHEET 1 OF 4 SHEETS/

ATA CODE & INDEX NO.	PART NO.	DESCRIPTION 1 2 3 4 5 6 7	UNITS PER ASSY	USABLE ON CODE
20-05	95-110041-601	LEADING EDGE ASSY,LH INBD/	1	1
	95-110041-602	LEADING EDGE ASSY,RH INBD/	1	1
	95-110015-613	. LINER ASSY,TOP LH	1	1
	95-110015-614	. LINER ASSY,TOP RH	1	1
- 1	50-110010-98	. . LINER,TOP LH.	1	1
	50-110010-99	. . LINER,TOP RH.	1	1
- 2	50-110010-100	. . CLIP.	1	1
- 3	50-110010-112	. . ANGLE	1	1
- 4	45-115216-22	. . ANGLE	1	1
	NAS680A06	. . NUTPLATE.	4	1
- 5	50-110010-179	. . ANGLE	2	1
	AN507-632R8	. SCREW	4	1
	95-110015-609	. RIB ASSY,LH	1	1
	95-110005-610	. RIB ASSY,RH	1	1
- 6	95-110015-73	. . RIB,LH.	1	1
	95-110015-74	. . RIB,RH.	1	1
- 7	50-110010-125	. . ANGLE,LH.	1	1
	50-110010-126	. . ANGLE,RH.	1	1
- 8	50-110010-165	. . STIFFENER	1	1
- 9	50-110046-8	. . ANGLE,LH.	1	1
	50-110046-9	. . ANGLE,RH.	1	1
- 10	35-115166-20	. . STRIP	1	1
- 11	35-115166-14	. . DOOR.	1	1
		/ATTACHING PARTS/		
- 12	104215-00300	. . PIN,HINGE	1	
		——*——		
- 13	35-115166-16	. . HINGE	2	1
	A6195-8Z3	. . NUT,ANCHOR.	1	1
	95-110015-619	. SPAR ASSY,LH.	1	1
	95-110015-620	. SPAR ASSY,RH.	1	1
- 14	95-110015-65	. . SPLICE,LH	1	1
	95-110015-66	. . SPLICE,RH	1	1
- 15	95-110015-67	. . SPAR,LH	1	1
	95-110015-68	. . SPAR,RH	1	1
- 16	95-110015-69	. . SPAR,LH	1	1
	95-110015-70	. . SPAR,RH	1	1
- 17	35-115177-4	. . ANGLE,LH.	1	1
	35-115177-5	. . ANGLE,RH.	1	1
- 18	35-115177-6	. . ANGLE,LH.	1	1
	35-115177-7	. . ANGLE,RH.	1	1
- 19	45-115178-18	. . ANGLE,LH.	1	1
	45-115178-19	. . ANGLE,RH.	1	1
- 20	45-115178-22	. . ANGLE,LH.	1	1
	45-115178-23	. . ANGLE,RH.	1	1
	MS35489-6	. GROMMET/SUPERSEDES AN931-4-7/	3	1
	K1100-832	. NUTPLATE/SUPERSEDES 22A38-82/	1	1
	45-115089-33	. CHANNEL ASSY.	1	1
- 21	45-115089-31	. . CHANNEL	1	1
	22A1-82	. . NUTPLATE.	1	1
	22A17-82	. . NUTPLATE.	2	1
- 22	45-115004-57	. SPACER.	2	1
	22A38-82BC100	. NUTPLATE.	2	1
	22A17-82	. NUTPLATE.	2	1
	AN366F832	. NUTPLATE.	1	1

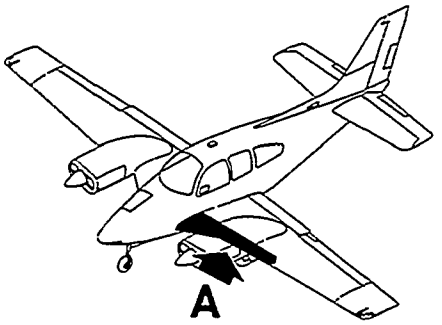

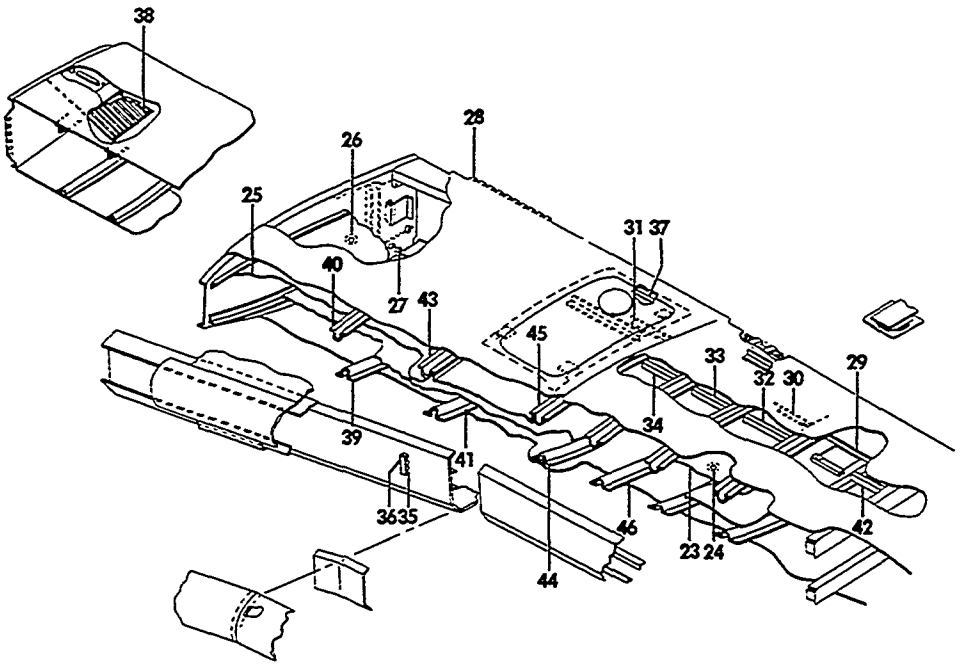

VIEW **A**

55-33-20

FIGURE 20-05. INBOARD LEADING EDGE
/SHEET 2 OF 4 SHEETS/

ATA CODE & INDEX NO.	PART NO.	DESCRIPTION 1 2 3 4 5 6 7	UNITS PER ASSY	USABLE ON CODE
20-05	95-110015-113	LINER ASSY,UPPER LH	1	1
	95-110015-114	LINER ASSY,UPPER RH	1	1
- 23	95-110015-123	LINER	1	1
- 24	50-110081	RETAINER	6	1
	50-110080	LINER ASSY,UPPER LH	1	1
	50-110080-1	LINER ASSY,UPPER RH	1	1
- 25	50-110080-2	LINER	1	1
- 26	50-110081	RETAINER	4	1
- 27	45-115053	CLIP ASSY	2	1
	45-115053-1	CLIP	1	1
	A6163-8Z	NUT	1	1
- 28	50-110010-18	HINGE,UPPER INBD LH	1	1
	50-110010-19	HINGE,UPPER INBD RH	1	1
- 29	50-110010-20	HINGE,LOWER INBD LH	1	1
	50-110010-21	HINGE,LOWER INBD RH	1	1
- 30	50-110010-34	SUPPORT,LOWER	4	1
- 31	50-110010-36	SUPPORT LOWER	2	1
- 32	50-110010-50	STRINGER,LH	1	1
	50-110010-51	STRINGER,RH	1	1
- 33	50-110010-52	STRINGER,LH	1	1
	50-110010-53	STRINGER,RH	1	1
- 34	50-110010-54	STRINGER,LH	1	1
	50-110010-55	STRINGER,RH	1	1
- 35	95-110040-1	SUPPORT	3	1
- 36	95-110040-3	CLAMP	3	1
		/ATTACHING PARTS/		
	AN515-8-14	SCREW	6	
	AN515-8-16	SCREW	3	
	AN960-8	WASHER	9	
	MS20364-832	NUT	9	
		——*——		
- 37	50-110010-88	ANGLE	1	1
	22A24-82	NUTPLATE	4	1
- 38	50-110010-131	REINFORCEMENT,RH	1	1
- 39	95-110015-9	FORMER,LOWER LH	1	1
	95-110015-10	FORMER,LOWER RH	1	1
- 40	95-110015-11	FORMER,UPPER LH	1	1
	95-110015-72	FORMER,UPPER RH	1	1
- 41	95-110015-13	FORMER,LOWER LH	1	1
	95-110015-14	FORMER,LOWER RH	1	1
- 42	35-115431-7	STRINGER,LH	1	1
	35-115431-8	STRINGER,RH	1	1
- 43	95-110015-15	FORMER,UPPER LH	1	1
	95-110015-16	FORMER,UPPER RH	1	1
- 44	95-110015-17	FORMER,LOWER LH	1	1
	95-110015-18	FORMER,LOWER RH	1	1
- 45	95-110015-19	FORMER,UPPER LH	1	1
	95-110015-20	FORMER,UPPER RH	1	1
- 46	95-110015-21	FORMER,LOWER LH	1	1
	95-110015-22	FORMER,LOWER RH	1	1

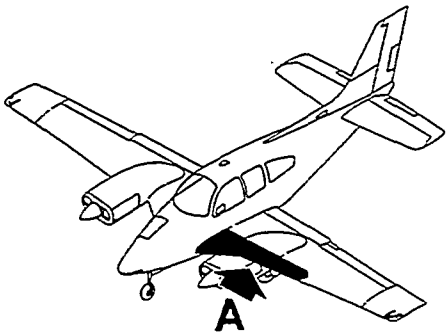

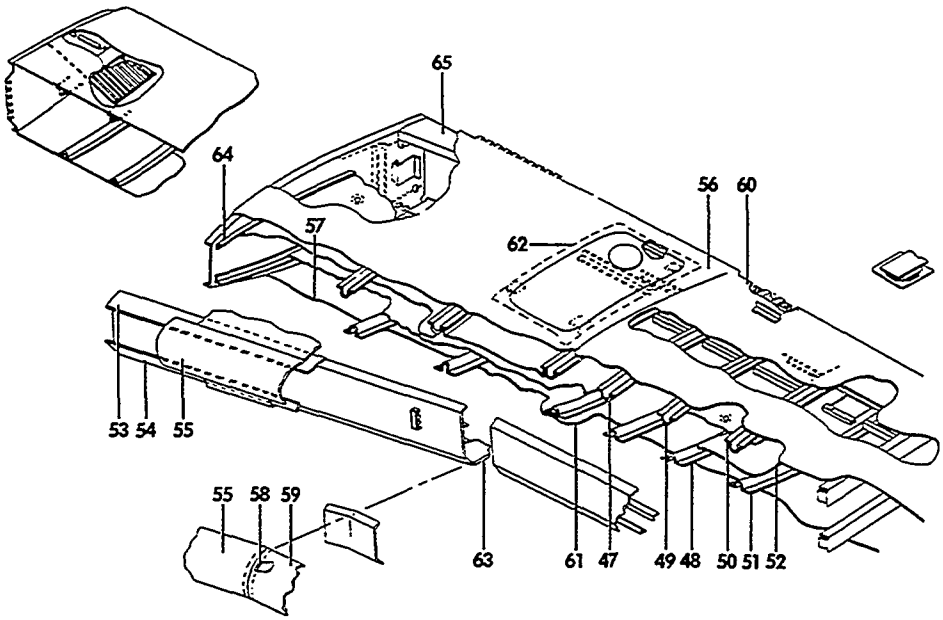

VIEW A

55-33-21

FIGURE 20-05. INBOARD LEADING EDGE
/SHEET 3 OF 4 SHEETS/

ATA CODE & INDEX NO.	PART NO.	DESCRIPTION 1 2 3 4 5 6 7	UNITS PER ASSY	USABLE ON CODE
20-05 - 47	95-110015-23	FORMER,UPPER LH	1	1
	95-110015-24	FORMER,UPPER RH	1	1
- 48	95-110015-25	FORMER,LOWER LH	1	1
	95-110015-26	FORMER,LOWER RH	1	1
	AN366-1032	NUTPLATE.	12	1
- 49	95-110015-27	FORMER,UPPER LH	1	1
	95-110015-28	FORMER,UPPER RH	1	1
- 50	95-110015-29	FORMER,UPPER LH	1	1
	95-110015-30	FORMER,UPPER RH	1	1
- 51	95-110015-31	FORMER,LOWER LH	1	1
	95-110015-32	FORMER,LOWER RH	1	1
- 52	95-110015-35	LINER,LOWER LH.	1	1
	95-110015-36	LINER,LOWER RH.	1	1
- 53	95-110015-167	DOUBLER,LH.	1	1
	95-110015-168	DOUBLER,RH.	1	1
- 54	95-110015-173	DOUBLER,LH.	1	1
	95-110015-174	DOUBLER,RH.	1	1
- 55	95-110015-101	SKIN,LH/TRIM ON INSTL/.	1	1
	95-110015-102	SKIN,RH/TRIM ON INSTL/.	1	1
	AN509-832-8	SCREW	29	1
- 56	95-110015-165	SKIN,STA 23 TO STA 47 UPPER LH.	1	1
	95-110015-166	SKIN,STA 23 TO STA 47 UPPER RH.	1	1
- 57	95-110015-171	SKIN,STA 23 TO STA 47 LOWER LH.	1	1
	95-110015-172	SKIN,STA 23 TO STA 47 LOWER RH.	1	1
	AN366F832	NUTPLATE.	27	1
- 58	95-110015-105	ANGLE,LH.	1	1
	95-110015-106	ANGLE,RH.	1	1
- 59	95-110015-107	SKIN,LH	1	1
	95-110015-108	SKIN,RH	1	1
	AN509-832-8	SCREW	6	1
- 60	95-110015-177	SKIN,STA 47 TO STA 73 UPPER LH.	1	1
	95-110015-178	SKIN,STA 47 TO STA 73 UPPER RH.	1	1
- 61	95-110015-179	SKIN,STA 47 TO STA 73 LOWER LH.	1	1
	95-110015-180	SKIN,STA 47 TO STA 73 LOWER RH.	1	1
	22A17-82	NUTPLATE.	2	1
	AN366F832	NUTPLATE.	2	1
- 62	95-110015-181	DOUBLER,LH.	1	1
	95-110015-182	DOUBLER,RH.	1	1
	22A17-82	NUTPLATE.	2	1
- 63	95-110015-117	DOUBLER,LH.	1	1
	95-110015-118	DOUBLER,RH.	1	1
	22A17-82	NUTPLATE.	2	1
	22NA1K82	NUTPLATE.	3	1
	AN515-8R	SCREW	9	1
- 64	50-110046-10	ANGLE,LH.	1	1
	50-110046-11	ANGLE,RH.	1	1
- 65	50-110056	GUSSET,LH	1	1
	50-110056-1	GUSSET,RH	1	1

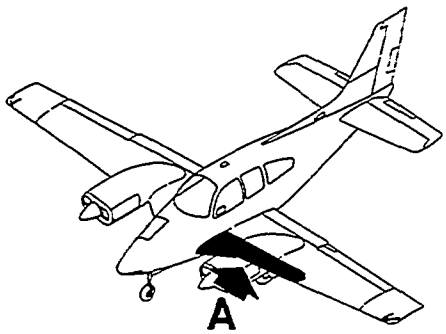

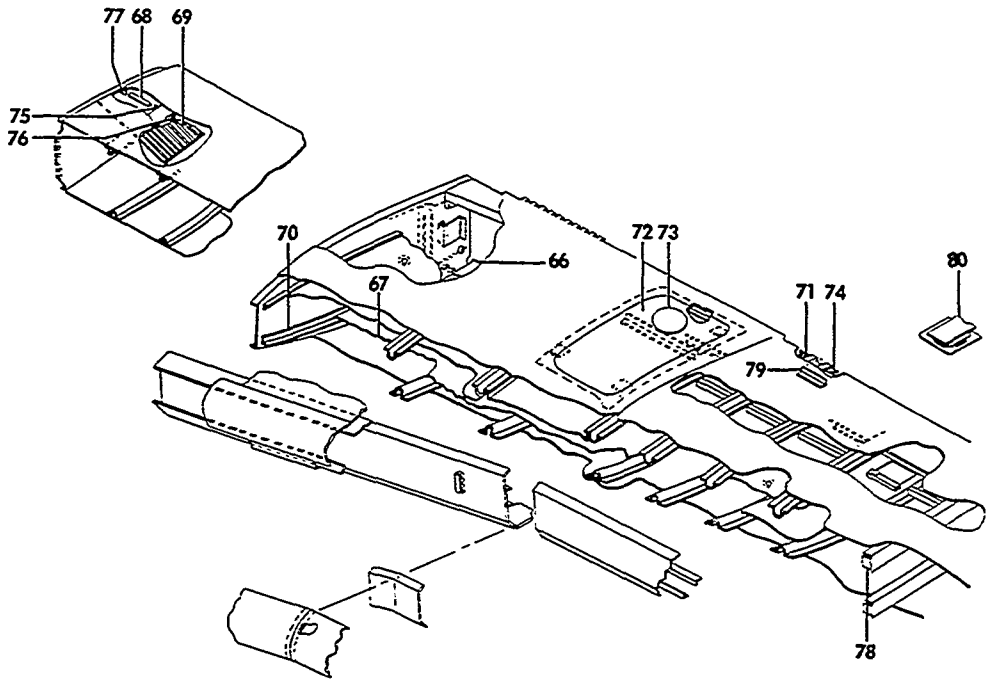

VIEW **A**

55-33-22

FIGURE 20-05.INBOARD LEADING EDGE
/SHEET 4 OF 4 SHEETS/

ATA CODE & INDEX NO.	PART NO.	DESCRIPTION 1 2 3 4 5 6 7	UNITS PER ASSY	USABLE ON CODE
20-05 - 66	50-110062	GUSSET,LH	1	1
	50-110062-1	GUSSET,RH	1	1
- 67	50-110086-1	LINER,LOWER LH.	1	1
	50-110086-2	LINER,LOWER RH.	1	1
- 68	35-115028-9	ANGLE,RH.	1	1
- 69	35-115028-11	ANGLE,RH.	1	1
- 70	35-115166-4	ANGLE,LH.	1	1
	35-115166-5	ANGLE,RH.	1	1
- 71	35-115212	CLIP,LH	24	1
- 72	50-110010-108	DOOR ASSY,FLUSH FILLER CAP LH	1	2
	95-110041-69	DOOR ASSY,FLUSH FILLER CAP LH	1	3
	50-110010-109	DOOR ASSY,FLUSH FILLER CAP RH	1	2
	95-110041-70	DOOR ASSY,FLUSH FILLER CAP RH	1	3
- 73	50-110010-106	COVER	1	1
- 74	35-115212-1	CLIP,RH	24	1
- 75	35-115213	CLIP,RH	2	1
- 76	35-115213-1	CLIP,RH	1	1
- 77	35-115214	CLIP,RH	1	1
- 78	35-115383-2	RIB,LH.	1	1
	35-115383-5	RIB,RH.	1	1
	22NA1K82	NUTPLATE.	3	1
	22A17-82	NUT,ANCHOR.	2	1
- 79	95-980001-169	CLIP,NACELLE.	1	1
- 80	95-110018	DOOR ASSY,LANDING GEAR ACCESS	1	1

CODES OF EFFECTIVITY

1 TC-1 THRU TC-399 2 TC-1 THRU TC-75
3 TC-76 THRU TC-399

"END"

57-20-06
WING INBOARD LEADING EDGE
TC-400 THRU TC-1607
TE-1 THRU TE-942 EXCEPT TE-938

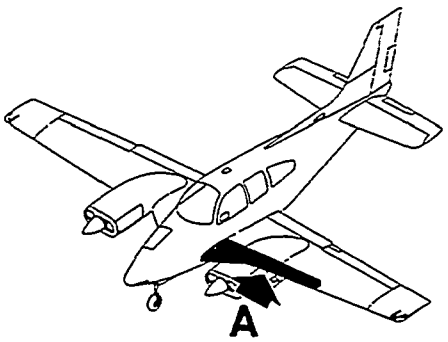

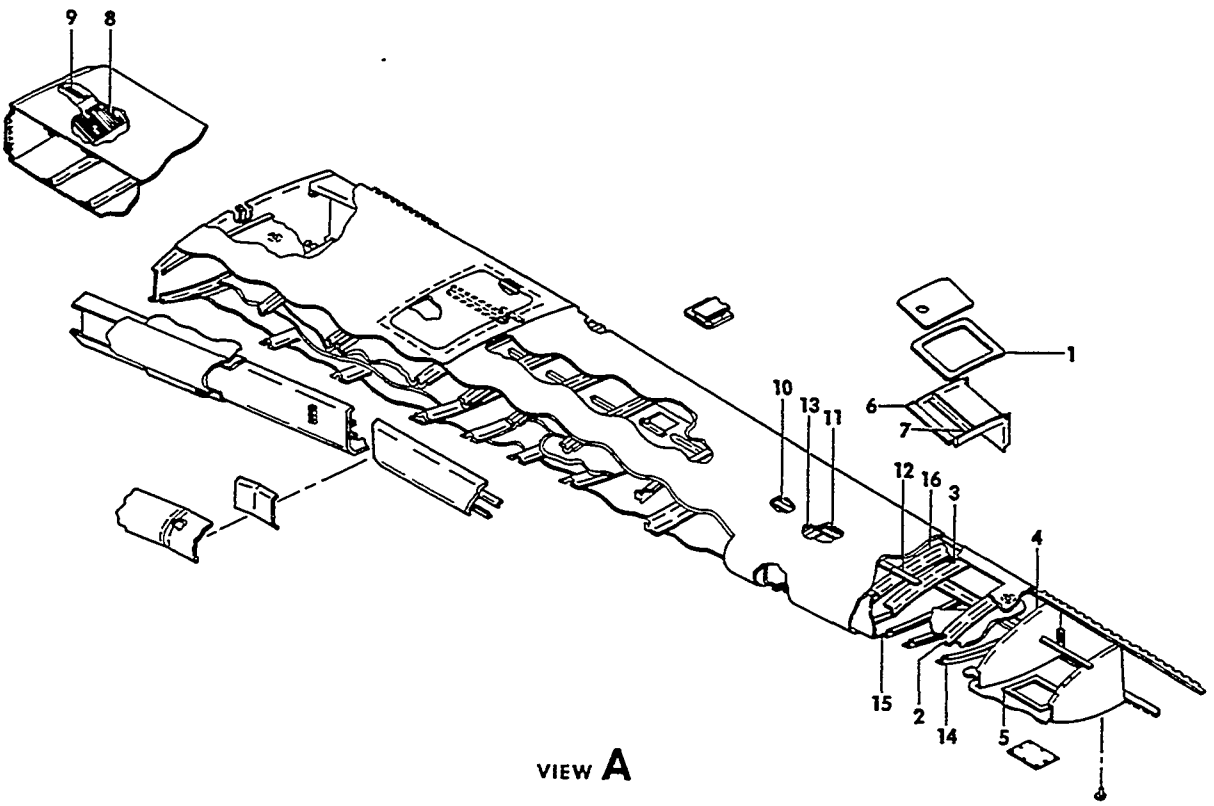

VIEW A

55-33-23

FIGURE 20-06.INBOARD LEADING EDGE
/SHEET 1 OF 6 SHEETS/

ATA CODE & INDEX NO.	PART NO.	DESCRIPTION 1 2 3 4 5 6 7	UNITS PER ASSY	USABLE ON CODE
20-06	96-110007-603	LEADING EDGE ASSY,LH INBD/LESS FUEL CELLS/. . .	1	1
	96-110007-604	LEADING EDGE ASSY,RH INBD/LESS FUEL CELLS/. . .	1	1
	35-115431-615	. DOUBLER ASSY,FUEL FILLER LH	1	1
	35-115431-616	. DOUBLER ASSY,FUEL FILLER RH	1	1
- 1	35-115431-77	. . DOUBLER,LH.	1	1
	35-115431-78	. . DOUBLER,RH.	1	1
	MS21047L08	. . NUTPLATE.	6	1
	35-115431-609	. ZEE ASSY,LH/STA 103/.	1	1
	35-115431-610	. ZEE ASSY,RH/STA 103/.	1	1
- 2	35-115431-33	. . ZEE,LH.	1	1
	35-115431-34	. . ZEE,RH.	1	1
	MS21047L08	. . NUTPLATE.	8	1
	35-115431-611	. ZEE ASSY,LH/STA 94/	1	1
	35-115431-612	. ZEE ASSY,RH/STA 94/	1	1
- 3	35-115431-27	. . ZEE,LH.	1	1
	35-115431-28	. . ZEE,RH.	1	1
	MS21047L08	. . NUTPLATE.	8	1
- 4	35-115431-5	. RIB ASSY,LH/STA 113/.	1	1
	35-115431-6	. RIB ASSY,RH/STA 113/.	1	1
	35-115431-15	. . RIB,LH.	1	1
	35-115431-16	. . RIB,RH.	1	1
	35-115431-17	. . ANGLE,LH.	1	1
	35-115431-18	. . ANGLE,RH.	1	1
	35-115431-19	. . ANGLE,LH.	1	1
	35-115431-20	. . ANGLE,RH.	1	1
	35-115431-59	. . ANGLE,LH.	1	1
	35-115431-60	. . ANGLE,RH.	1	1
	35-115431-21	. . ANGLE,LH & RH	1	1
	35-115431-621	. DOUBLER ASSY,WING ACCESS DOOR LH.	1	1
	35-115431-622	. DOUBLER ASSY.	1	1
- 5	50-110010-161	. . DOUBLER,LH.	1	1
	50-110010-162	. . DOUBLER,RH.	1	1
	MS21049L08	. . NUTPLATE.	14	1
	35-115431-613	. PAN ASSY,FUEL FILLER DOOR LH.	1	1
	35-115431-614	. PAN ASSY,FUEL FILLER DOOR RH.	1	1
- 6	35-115431-69	. . PAN,LH.	1	1
	35-115431-70	. . PAN,RH.	1	1
- 7	35-115431-31	. . ANGLE,LH & RH	1	1
- 8	35-115028-11	. ANGLE,FWD WALKWAY RH.	1	1
- 9	35-115028-9	. ANGLE,FWD WALKWAY RH.	1	1
- 10	35-115431-9	. STRINGER,UPPER LEADING EDGE LH.	1	1
	35-115431-10	. STRINGER,UPPER LEADING EDGE RH.	1	1
- 11	95-110041-5	. STRINGER,UPPER LEADING EDGE LH.	1	1
	95-110041-6	. STRINGER,UPPER LEADING EDGE RH.	1	1
- 12	95-110041-11	. STRINGER,UPPER LEADING EDGE LH.	1	1
	95-110041-12	. STRINGER,UPPER LEADING EDGE RH.	1	1
- 13	35-115431-39	. ZEE,LEADING EDGE UPPER LH/STA 83/	1	1
	35-115431-40	. ZEE,LEADING EDGE UPPER RH/STA 83/	1	1
- 14	35-115431-29	. ZEE,LEADING EDGE LOWER LH/STA 103/.	1	1
	35-115431-30	. ZEE,LEADING EDGE LOWER RH/STA 103/.	1	1
- 15	35-115431-23	. ZEE,LEADING EDGE LOWER LH/STA 94/	1	1
	35-115431-24	. ZEE,LEADING EDGE LOWER RH/STA 94/	1	1
- 16	95-110041-17	. ZEE,LEADING EDGE UPPER LH/STA 89/	1	1
	95-110041-18	. ZEE,LEADING EDGE UPPER RH/STA 89/	1	1

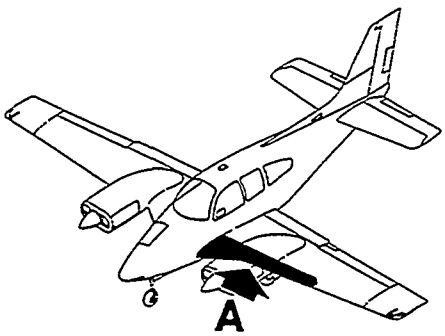

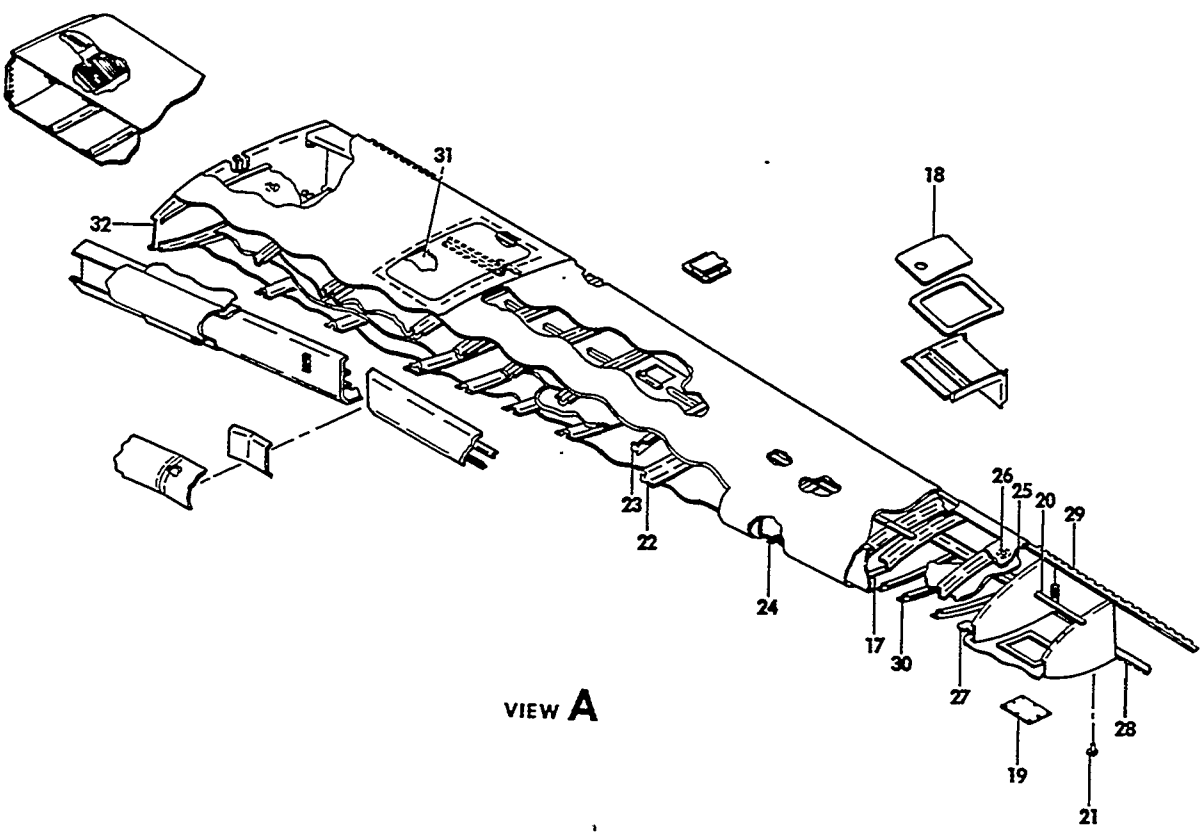

FIGURE 20-06.INBOARD LEADING EDGE
/SHEET 2 OF 6 SHEETS/

ATA CODE & INDEX NO.	PART NO.	DESCRIPTION 1 2 3 4 5 6 7	UNITS PER ASSY	USABLE ON CODE
20-06 - 17	95-110041-15	. ZEE,LEADING EDGE LOWER LH/STA 89/	1	1
	95-110041-16	. ZEE,LEADING EDGE LOWER RH/STA 89/	1	1
- 18	95-110041-73	. DOOR ASSY,LEADING EDGE FUEL FILLER LH	1	1
	95-110041-74	. DOOR ASSY,LEADING EDGE FUEL FILLER RH	1	1
		/ATTACHING PARTS/		
	AN509-8R8	. SCREW	14	
- 19	50-110010-163	. DOOR,LEADING EDGE ACCESS.	1	1
		/ATTACHING PARTS/		
	AN509-8R8	. SCREW	14	
- 20	96-110007-5	. STRINGER,LEADING EDGE UPPER LH.	1	1
	96-110007-6	. STRINGER,LEADING EDGE UPPER RH.	1	1
- 21	50-920077-5	. FLANGE ASSY,FUEL VENT LH & RH	1	1
- 22	35-115431-41	. ZEE,LEADING EDGE LOWER LH/STA 73/	1	1
	35-115431-42	. ZEE,LEADING EDGE LOWER RH/STA 73/	1	1
- 23	35-115431-45	. ZEE,LEADING EDGE UPPER LH/STA 73/	1	1
	35-115431-46	. ZEE,LEADING EDGE UPPER RH/STA 73/	1	1
- 24	35-115431-117	. ZEE,LEADING EDGE LOWER LH/STA 83/	1	1
	35-115431-118	. ZEE,LEADING EDGE LOWER RH/STA 83/	1	1
	35-115431-125	. LINER ASSY,LEADING EDGE UPPER LH.	1	1
	35-115431-126	. LINER ASSY,LEADING EDGE UPPER RH.	1	1
- 25	35-115431-123	. . LINER,LEADING EDGE UPPER LH & RH.	1	1
- 26	50-110081	. . RETAINER,FUEL CELL SUPPORT.	12	1
- 27	35-115431-105	. LINER,FUEL CELL LOWER LH & RH	1	1
- 28	35-115431-111	. HINGE,LOWER INBD LH	1	1
	35-115431-112	. HINGE,LOWER INBD RH	1	1
- 29	35-115431-109	. HINGE,UPPER INBD LH	1	1
	35-115431-110	. HINGE,UPPER INBD RH	1	1
- 30	95-110041-19	. ZEE,LEADING EDGE LOWER LH/STA 98/	1	1
	95-110041-20	. ZEE,LEADING EDGE LOWER RH/STA 98/	1	1
- 31	50-110010-110	. LINER ASSY,FUEL CELL UPPER LH	1	1
	50-110010-111	. LINER ASSY,FUEL CELL UPPER RH	1	1
	50-110010-100	. . CLIP.	1	1
	50-110010-112	. . ANGLE	1	1
	50-110010-98	. . LINER,LH.	1	1
	50-110010-99	. . LINER,RH.	1	1
	50-110010-179	. . ANGLE	2	1
	45-115216-22	. . ANGLE	1	1
	NAS680A06	. . NUTPLATE.	4	1
- 32	96-110007-609	. RIB ASSY,LEADING EDGE LH/STA 23/.	1	1
	96-110007-610	. RIB ASSY,LEADING EDGE RH/STA 23/.	1	1
	96-110007-7	. . RIB,ROOT LH	1	1
	96-110007-8	. . RIB,ROOT RH	1	1
	50-110010-125	. . ANGLE,ROOT RIB LH	1	1
	50-110010-126	. . ANGLE,ROOT RIB RH	1	1
	50-110046-8	. . ANGLE,ROOT RIB LH	1	1
	50-110046-9	. . ANGLE,ROOT RIB RH	1	1
	35-115166-20	. . STRIP,ROOT RIB LH & RH.	1	1
	35-115166-14	. . DOOR,ROOT RIB LH & RH	1	1
	35-115166-16	. . HINGE,ROOT RIB LH & RH.	2	1
	104215-00300	. . PIN,HINGE	1	1
	A6195-8Z3	. . NUT,ANCHOR.	1	1
	50-110010-165	. . STIFFENER,ROOT RIB.	1	1

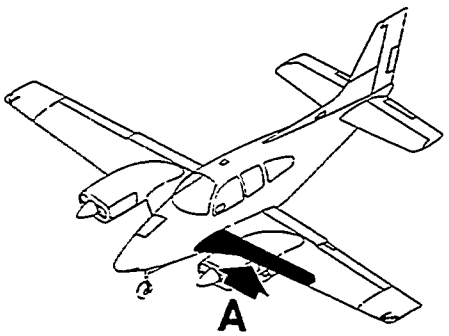

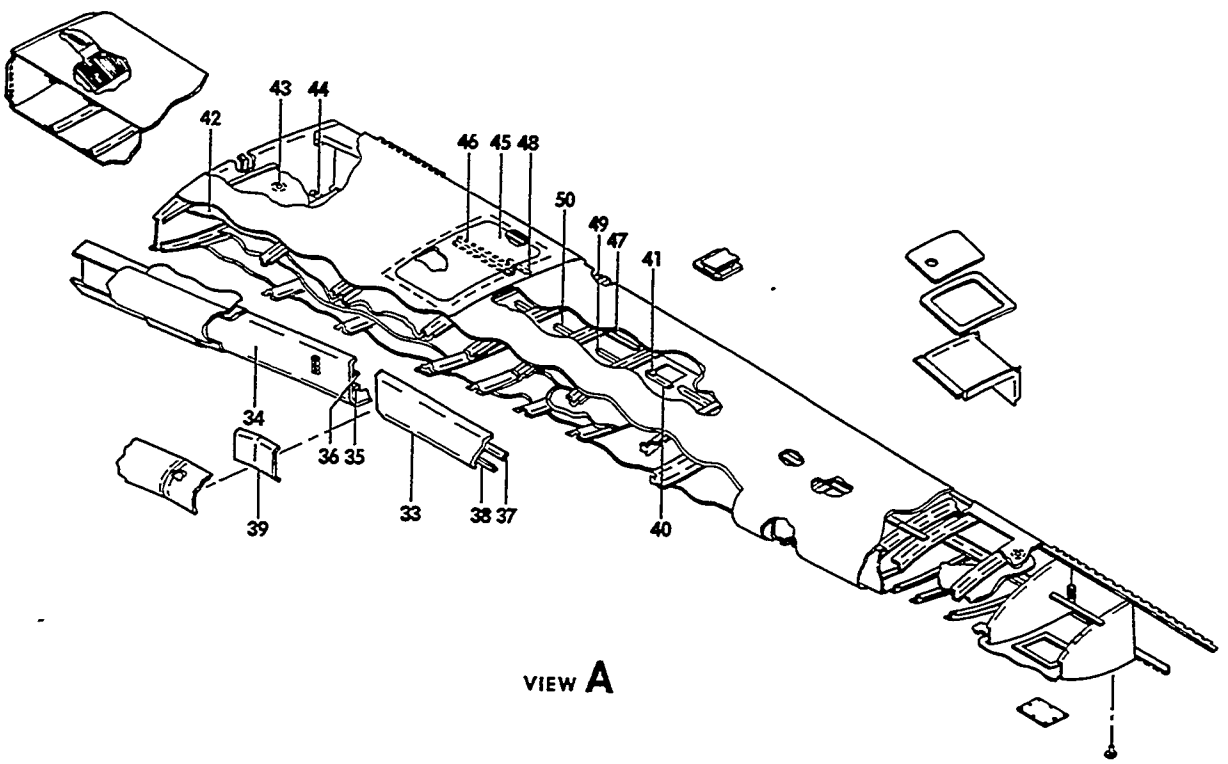

55-33-25

FIGURE 20-06.INBOARD LEADING EDGE
/SHEET 3 OF 6 SHEETS/

ATA CODE & INDEX NO.	PART NO.	DESCRIPTION 1 2 3 4 5 6 7	UNITS PER ASSY	USABLE ON CODE
20-06	96-110007-607	. SPAR ASSY,INBD LEADING EDGE LH.	1	2
	96-110007-627	. SPAR ASSY,INBD LEADING EDGE LH.	1	3
	96-110007-608	. SPAR ASSY,INBD LEADING EDGE RH.	1	2
	96-110007-628	. SPAR ASSY,INBD LEADING EDGE RH.	1	3
- 33	35-115431-103	. . SPAR,INBD LEADING EDGE LH	1	2
	96-110007-65	. . SPAR,INBD LEADING EDGE LH	1	3
	35-115431-104	. . SPAR,INBD LEADING EDGE RH	1	2
	96-110007-66	. . SPAR,INBD LEADING EDGE RH	1	3
- 34	95-110015-67	. . SPAR,INBD LEADING EDGE LH	1	2
	96-110007-37	. . SPAR,INBD LEADING EDGE LH	1	3
	95-110015-68	. . SPAR,INBD LEADING EDGE RH	1	2
	96-110007-38	. . SPAR,INBD LEADING EDGE RH	1	3
	35-115431-85	. . ANGLE,SPAR LH	1	1
	35-115431-86	. . ANGLE,SPAR RH	1	1
	35-115431-87	. . ANGLE,SPAR LH	1	1
	35-115431-88	. . ANGLE,SPAR RH	1	1
- 35	35-115177-4	. . ANGLE,SPAR LH	1	1
	35-115177-5	. . ANGLE,SPAR RH	1	1
- 36	35-115177-6	. . ANGLE,SPAR LH	1	1
	35-115177-7	. . ANGLE,SPAR RH	1	1
- 37	45-115178-18	. . ANGLE,SPAR LH	1	1
	45-115178-19	. . ANGLE,SPAR RH	1	1
- 38	45-115178-22	. . ANGLE,SPAR LH	1	1
	45-115178-23	. . ANGLE,SPAR RH	1	1
- 39	95-110015-65	. . SPLICE,SPAR LH.	1	2
	96-110016-79	. . SPLICE,SPAR LH.	1	3
	95-110015-66	. . SPLICE,SPAR RH.	1	2
	96-110016-80	. . SPLICE,SPAR RH.	1	3
	35-921154-101	. . SUPPORT,FUEL LINE	1	1
- 40	45-115089-33	. CHANNEL ASSY,LH	1	1
	45-115089-31	. . CHANNEL,LH.	1	1
	22A1-82	. . NUTPLATE.	2	1
	22A17-82	. . NUTPLATE.	4	1
- 41	45-115004-57	. SPACER.	2	1
	MS21049L08	. NUTPLATE.	2	1
	22A17-82	. NUTPLATE.	2	1
	MS21047L08	. NUTPLATE.	1	1
	50-110080	. LINER ASSY,LEADING EDGE LH.	1	1
	50-110080-1	. LINER ASSY,LEADING EDGE RH.	1	1
- 42	50-110080-2	. . LINER,FUEL CELL UPPER LH & RH	1	1
- 43	50-110081	. . RETAINER.	4	1
- 44	45-115053	. CLIP ASSY	2	1
	45-115053-1	. . CLIP.	2	1
	A6163-8Z	. . NUT	2	1
- 45	95-110041-61	. DOOR,LEADING EDGE UPPER INBD LH	1	1
	95-110041-62	. DOOR,LEADING EDGE UPPER INBD RH	1	1
		/ATTACHING PARTS/		
	AN507-832R8	. SCREW	16	
	MS21049L08	. NUTPLATE.	12	
		——*——		
	22A24-82	. NUTPLATE.	4	
- 46	50-110010-112	. ANGLE,DOOR SUPPORT.	1	1
- 47	50-110010-34	. SUPPORT,LH & RH	4	1
- 48	50-110010-36	. SUPPORT,LH & RH	3	1
- 49	50-110010-50	. STRINGER,LH	1	1
	50-110010-51	. STRINGER,RH	1	1
- 50	50-110010-52	. STRINGER,LH	1	1
	50-110010-53	. STRINGER,RH	1	1

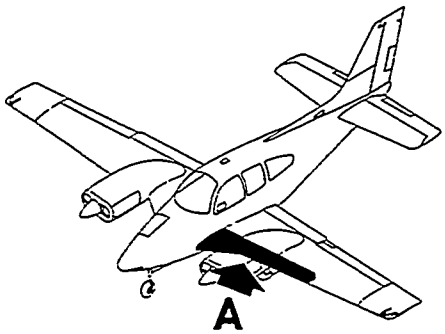

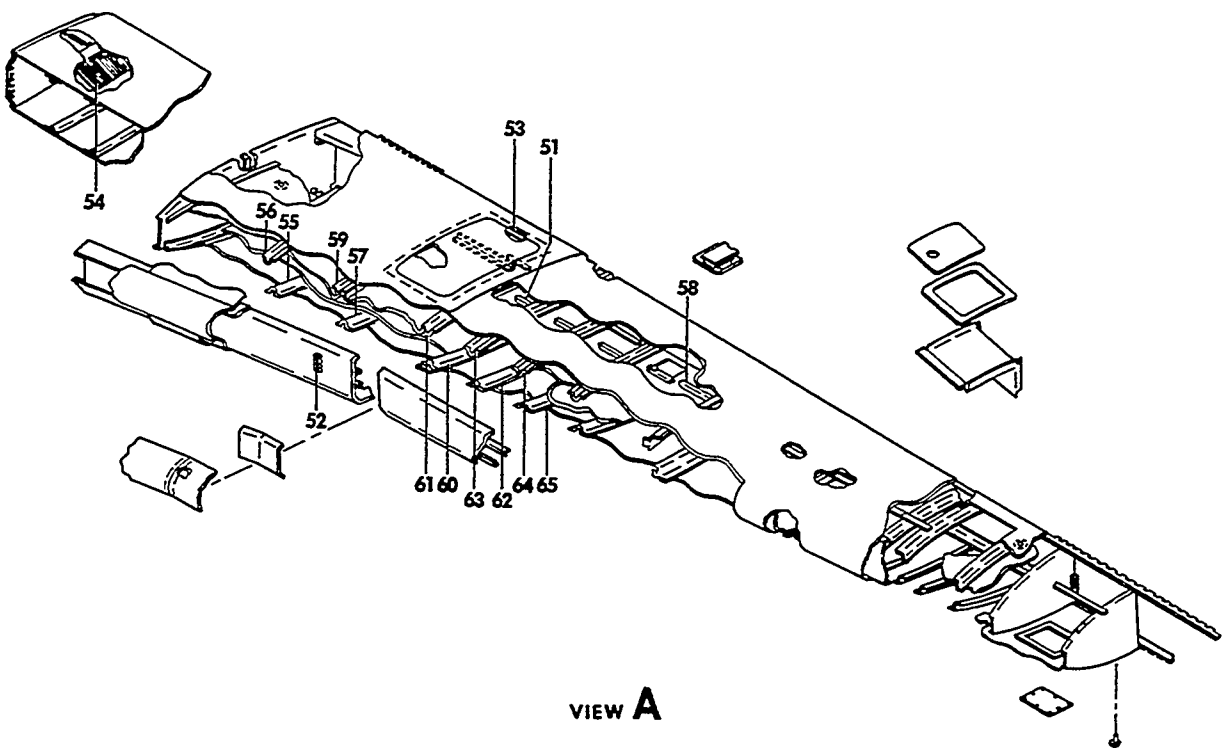

55-33-26

FIGURE 20-06.INBOARD LEADING EDGE
/SHEET 4 OF 6 SHEETS/

ATA CODE & INDEX NO.	PART NO.	DESCRIPTION 1 2 3 4 5 6 7	UNITS PER ASSY	USABLE ON CODE
20-06 - 51	50-110010-54	STRINGER,LH	1	2
	96-100016-97	STRINGER,LH	1	3
	50-110010-55	STRINGER,RH	1	2
	96-100016-98	STRINGER,RH	1	3
- 52	95-110040	SUPPORT ASSY,TUBE	3	1
		/ATTACHING PARTS/		
	MS35206-248	SCREW	6	
	MS35206-249	SCREW	3	
	AN960-8	WASHER	9	
	MS20364-832	NUT/SUPERSEDES AN364-832/	9	
		----*----		
	95-110040-1	SUPPORT,TUBE	3	1
	95-110040-3	CLAMP	3	1
- 53	50-110010-88	ANGLE	1	1
- 54	50-110010-131	REINFORCEMENT/RH ONLY/	1	1
- 55	95-110015-9	FORMER,LOWER LH/STA 31/	1	2
	96-110007-47	FORMER,LOWER LH/STA 31/	1	3
	95-110015-10	FORMER,LOWER RH/STA 31/	1	2
	96-110007-48	FORMER,LOWER RH/STA 31/	1	3
- 56	95-110015-11	FORMER,UPPER LH/STA 31/	1	2
	96-100016-53	FORMER,UPPER LH/STA 31/	1	3
	95-110015-72	FORMER,UPPER RH/STA 31/	1	2
	96-100016-99	FORMER,UPPER RH/STA 31/	1	3
- 57	95-110015-13	FORMER,LOWER LH/STA 39/	1	2
	96-100016-55	FORMER,LOWER LH/STA 39/	1	3
	95-110015-14	FORMER,LOWER RH/STA 39/	1	2
	96-100016-56	FORMER,LOWER RH/STA 39/	1	3
- 58	35-115431-7	STRINGER,UPPER LH	1	1
	35-115431-8	STRINGER,UPPER RH	1	1
- 59	95-110015-15	FORMER,UPPER LH/STA 39/	1	2
	96-110007-59	FORMER,UPPER LH/STA 39/	1	3
	95-110015-16	FORMER,UPPER RH/STA 39/	1	2
	96-110007-60	FORMER,UPPER RH/STA 39/	1	3
- 60	95-110015-17	FORMER,LOWER LH/STA 47/	1	2
	96-100016-59	FORMER,LOWER LH/STA 47/	1	3
	95-110015-18	FORMER,LOWER RH/STA 47/	1	2
	96-100016-60	FORMER,LOWER RH/STA 47/	1	3
	96-100016-51	DOUBLER,LOWER LH/STA 47/	1	3
	96-100016-52	DOUBLER,LOWER RH/STA 47/	1	3
- 61	95-110015-19	FORMER,UPPER LH/STA 47/	1	2
	96-100016-61	FORMER,UPPER LH/STA 47/	1	3
	95-110015-20	FORMER,UPPER RH/STA 47/	1	2
	96-100016-62	FORMER,UPPER RH/STA 47/	1	3
- 62	95-110015-21	FORMER,LOWER LH/STA 53/	1	2
	96-100016-63	FORMER,LOWER LH/STA 53/	1	3
	95-110015-22	FORMER,LOWER RH/STA 53/	1	2
	96-100016-64	FORMER,LOWER RH/STA 53/	1	3
- 63	95-110015-23	FORMER,UPPER LH/STA 53/	1	2
	96-100016-65	FORMER,UPPER LH/STA 53/	1	3
	95-110015-24	FORMER,UPPER RH/STA 53/	1	2
	96-100016-66	FORMER,UPPER RH/STA 53/	1	3
- 64	95-110015-25	FORMER,UPPER LH/STA 59/	1	1
	95-110015-26	FORMER,UPPER RH/STA 59/	1	1
- 65	95-110015-27	FORMER,LOWER LH/STA 59/	1	1
	95-110015-28	FORMER,LOWER RH/STA 59/	1	1

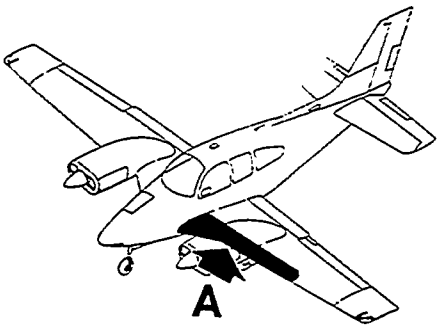

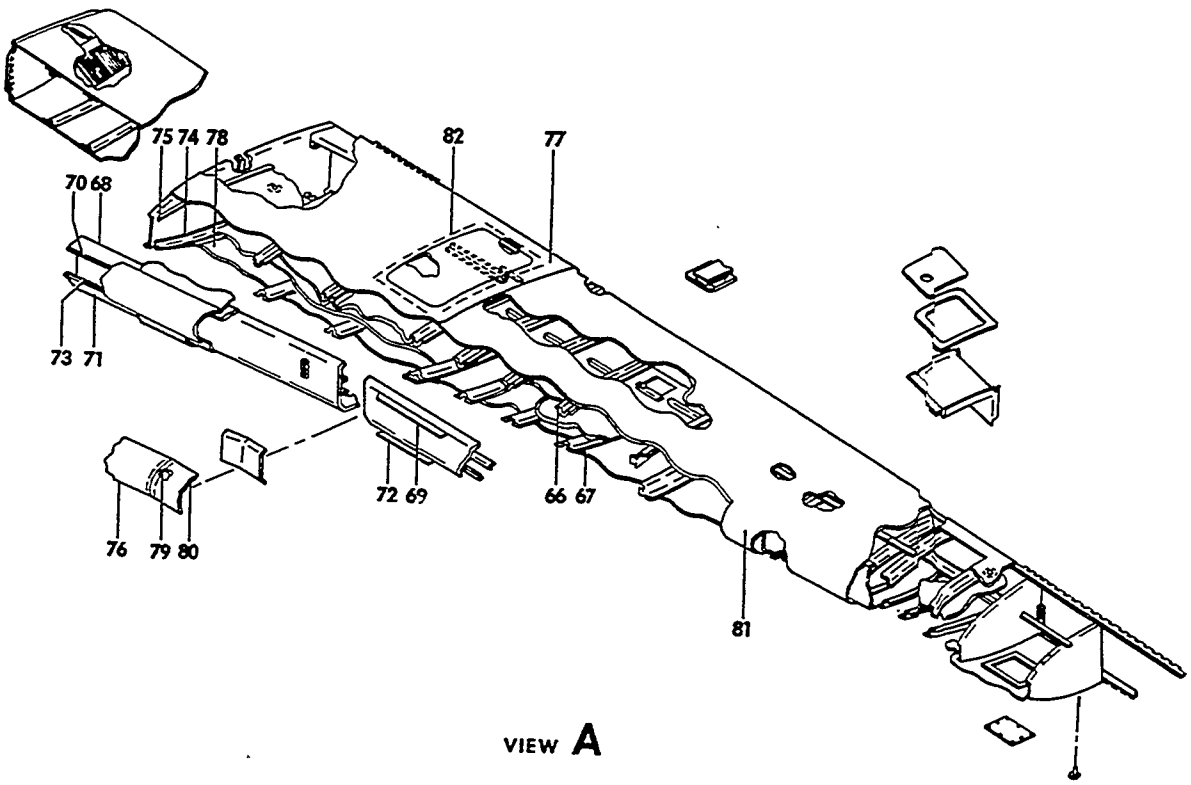

55-33-27

FIGURE 20-06. INBOARD LEADING EDGE
/SHEET 5 OF 6 SHEETS/

ATA CODE & INDEX NO.	PART NO.	DESCRIPTION 1 2 3 4 5 6 7	UNITS PER ASSY	USABLE ON CODE
20-06 - 66	95-110015-29	FORMER,UPPER LH/STA 66/	1	1
	95-110015-30	FORMER,UPPER RH/STA 66/	1	1
- 67	95-110015-31	FORMER,LOWER LH/STA 66/	1	1
	95-110015-32	FORMER,LOWER RH/STA 66/	1	1
- 68	95-110015-167	DOUBLER,UPPER LH.	1	2
	96-110007-77	DOUBLER,UPPER LH.	1	3
	95-110015-168	DOUBLER,UPPER RH.	1	2
	96-110007-78	DOUBLER,UPPER RH.	1	3
- 69	96-110007-21	DOUBLER,UPPER OUTBD LH & RH/NUTPLATE HOLDING/	1	2
- 70	96-110007-17	DOUBLER,UPPER INBD LH & RH/NUTPLATE HOLDING/.	1	2
- 71	95-110015-173	DOUBLER,LOWER LH.	1	2
	96-110007-75	DOUBLER,LOWER LH.	1	3
	95-110015-174	DOUBLER,LOWER RH.	1	2
	96-110007-76	DOUBLER,LOWER RH.	1	3
- 72	96-110007-23	DOUBLER,LOWER OUTBD LH & RH/NUTPLATE HOLDING/	1	2
- 73	96-110007-19	DOUBLER,LOWER INBD LH & RH/NUTPLATE HOLDING/.	1	2
- 74	35-115166-4	ANGLE,ROOT RIB LOWER LH	1	1
	35-115166-5	ANGLE,ROOT RIB LOWER RH	1	1
- 75	35-115166-10	ANGLE,ROOT RIB UPPER LH	1	1
	35-115166-11	ANGLE,ROOT RIB UPPER RH	1	1
- 76	95-110015-101	SKIN,LEADING EDGE INBD LH	1	2
	96-110007-41	SKIN,LEADING EDGE INBD LH	1	3
	95-110015-102	SKIN,LEADING EDGE INBD RH	1	2
	96-110007-42	SKIN,LEADING EDGE INBD RH	1	3
		/ATTACHING PARTS/		
	MS24694S5	SCREW	29	
	MS21047L08	NUT	29	
		----*----		
- 77	95-110015-165	SKIN,LEADING EDGE UPPER LH.	1	2
	96-110007-43	SKIN,LEADING EDGE UPPER LH.	1	3
	95-110015-166	SKIN,LEADING EDGE UPPER RH.	1	2
	96-110007-44	SKIN,LEADING EDGE UPPER RH.	1	3
- 78	95-110015-171	SKIN,LEADING EDGE LOWER LH.	1	2
	96-110007-45	SKIN,LEADING EDGE LOWER LH.	1	3
	95-110015-172	SKIN,LEADING EDGE LOWER RH.	1	2
	96-110007-46	SKIN,LEADING EDGE LOWER RH.	1	3
- 79	95-110015-105	ANGLE,LEADING EDGE LH	1	2
	96-110007-35	ANGLE,LEADING EDGE LH	1	3
	95-110015-106	ANGLE,LEADING EDGE RH	1	2
	96-110007-36	ANGLE,LEADING EDGE RH	1	3
- 80	95-110015-107	SKIN,LEADING EDGE LH.	1	2
	96-110007-39	SKIN,LEADING EDGE LH.	1	3
	95-110015-108	SKIN,LEADING EDGE RH.	1	2
	96-110007-40	SKIN,LEADING EDGE RH.	1	3
		/ATTACHING PARTS/		
	MS24694S5	SCREW/PC OF AN509-832-8/.	6	
	MS21047L08	NUTPLATE/PC OF AN366F832/	2	
	MS21051L08	NUTPLATE/PC OF 22NA17A82/	4	
		----*----		
- 81	35-115431-99	SKIN,LEADING EDGE LH/STA 47 TO STA 122/	1	2
	96-110007-63	SKIN,LEADING EDGE LH/STA 47 TO STA 122/	1	3
	35-115431-100	SKIN,LEADING EDGE RH/STA 47 TO STA 122/	1	2
	96-110007-64	SKIN,LEADING EDGE RH/STA 47 TO STA 122/	1	3
- 82	95-110015-181	DOUBLER,TANK ACCESS DOOR LH	1	2
	96-110007-53	DOUBLER,TANK ACCESS DOOR LH	1	3
	95-110015-182	DOUBLER,TANK ACCESS DOOR RH	1	2
	96-110007-54	DOUBLER,TANK ACCESS DOOR RH	1	3

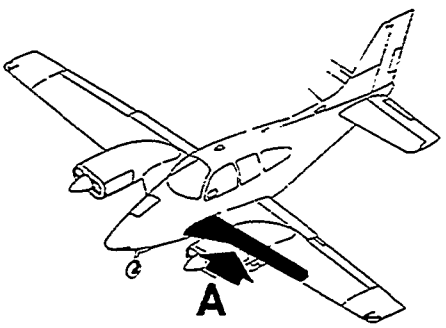

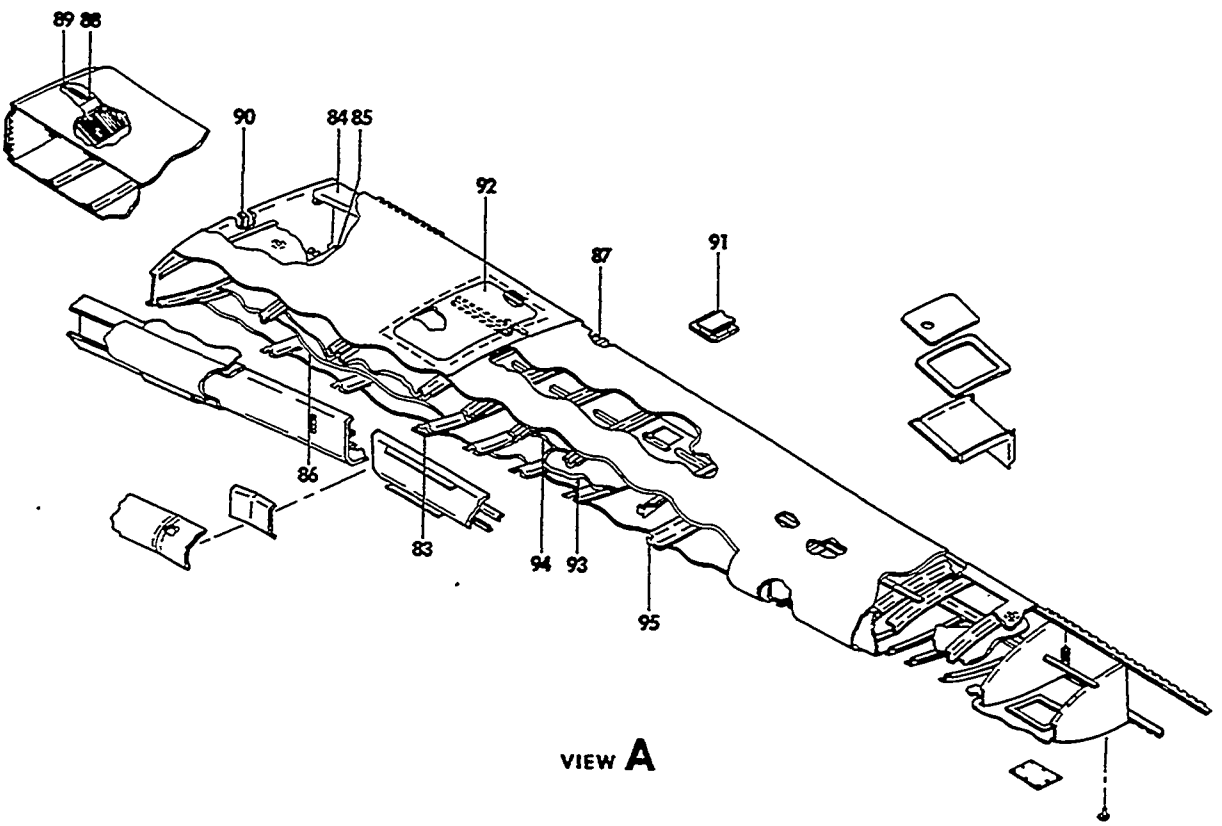

FIGURE 20-06.INBOARD LEADING EDGE
/SHEET 6 OF 6 SHEETS/

ATA CODE & INDEX NO.	PART NO.	DESCRIPTION 1 2 3 4 5 6 7	UNITS PER ASSY	USABLE ON CODE
20-06 - 83	95-110015-117	. DOUBLER,LEADING EDGE LOWER LH	1	1
	95-110015-118	. DOUBLER,LEADING EDGE LOWER RH	1	1
- 84	50-110056	. GUSSET,LEADING EDGE UPPER LH.	1	1
	50-110056-1	. GUSSET,LEADING EDGE UPPER RH.	1	1
- 85	50-110062	. GUSSET,LEADING EDGE LOWER LH.	1	1
	50-110062-1	. GUSSET,LEADING EDGE LOWER RH.	1	1
- 86	50-110086-1	. LINER,FUEL CELL LOWER LH.	1	1
	50-110086-2	. LINER,FUEL CELL LOWER RH.	1	1
- 87	35-115212	. CLIP,FUEL CELL LINER TO STRINGER LH	12	1
	35-115212-1	. CLIP,FUEL CELL LINER TO STRINGER RH	12	1
- 88	35-115213	. CLIP/RH ONLY/	2	1
	35-115213-1	. CLIP/RH ONLY/	1	1
- 89	35-115214	. CLIP/RH ONLY/	1	1
- 90	35-115383	. RIB ASSY,LH	1	1
	35-115383-2	. . RIB,LH.	1	1
	1/4 X .37	. . DOORTITE/11 INCHES LONG/.	1	1
	35-115383-7	. RIB ASSY,RH	1	1
	35-115383-5	. . RIB,RH.	1	1
	1/4 X .37	. . DOORTITE/11 INCHES LONG/.	1	1
- 91	95-110018	. DOOR ASSY,LANDING GEAR ACCESS	1	4
	35-115431-173	. DOOR.	1	5
	000-110179-1	. COVER	1	5
	95-110015-185	. STALL STRIP	1	1
	95-980001-169	. CLIP,NACELLE.	1	1
- 92	96-110007-629	. DOOR ASSY,LH/140 GAL SYSTEM/.	1	1
	96-110007-630	. DOOR ASSY,RH/140 GAL SYSTEM/.	1	1
	96-110007-57	. . DOOR,LH	1	1
	96-110007-58	. . DOOR,RH	1	1
	95-110041-65	. . ANGLE	1	1
- 93	95-110015-35	. LINER,LH/112 GAL SYSTEM/.	1	1
	95-110015-36	. LINER,RH/112 GAL SYSTEM/.	1	1
- 94	50-110078	. LINER,LH/112 GAL SYSTEM/.	1	1
	50-110078-1	. LINER,RH/112 GAL SYSTEM/.	1	1
- 95	35-115431-627	. RIB ASSY,LH/112 GAL SYSTEM/STA 73/.	1	1
	35-115431-628	. RIB ASSY,RH/112 GAL SYSTEM/STA 73/.	1	1
	95-110015-37	. . RIB,LH.	1	1
	95-110015-38	. . RIB,RH.	1	1
	50-110064-4	. . ANGLE,LH.	1	1
	50-110064-5	. . ANGLE,RH.	1	1
	50-110064-6	. . ANGLE,LH.	1	1
	50-110064-7	. . ANGLE,RH.	1	1

CODES OF EFFECTIVITY

1 TC-400 THRU TC-1607
TE-1 THRU TE-942
EXCEPT TE-938

2 TC-400 THRU TC-1032
TE-1 THRU TE-310

3 TC-1033 THRU TC-1607
TE-311 THRU TE-942
EXCEPT TE-938

4 TC-400 THRU TC-1494
TE-1 THRU TE-886

5 TC-1495 THRU TC-1607
TE-887 THRU TE-942
EXCEPT TE-938

"END"

57-20-10
WING OUTBOARD LEADING EDGE/WITH FUEL/
TC-1 THRU TC-399

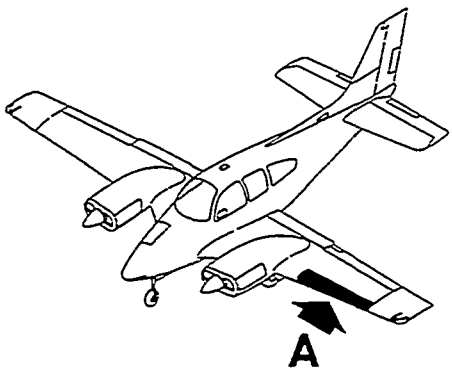

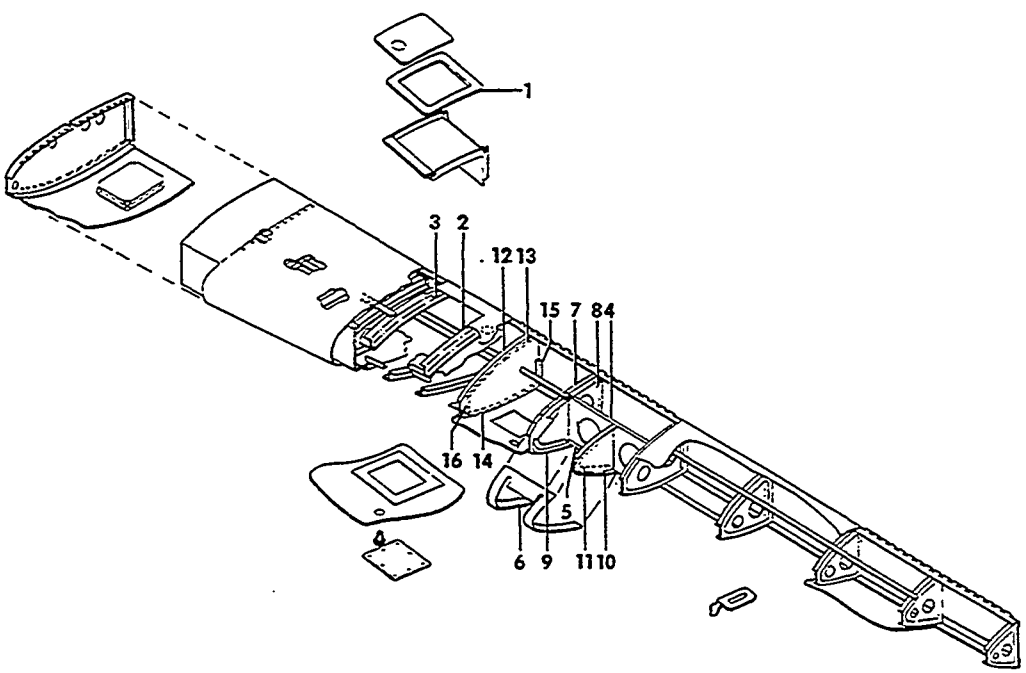

VIEW A

55-34-16

FIGURE 20-10.OUTBOARD LEADING EDGE
/SHEET 1 OF 4 SHEETS/

SUB-SECT UNIT & ITEM NO.	PART NO.	DESCRIPTION 1 2 3 4 5 6 7	UNITS PER ASSY	USABLE ON CODE
20-10	95-110041-605	OUTBOARD LEADING EDGE ASSY,LH/WITH FUEL/. . . .	1	1
	95-110041-606	OUTBOARD LEADING EDGE ASSY,RH/WITH FUEL/. . . .	1	1
	35-115431-615	. DOUBLER ASSY,LH	1	1
	35-115431-616	. DOUBLER ASSY,RH	1	1
- 1	35-115431-77	. . DOUBLER,LH.	1	1
	35-115431-78	. . DOUBLER,RH.	1	1
	AN366F832	. . NUTPLATE.	6	1
	35-115431-609	. ZEE ASSY,LH	1	1
	35-115431-610	. ZEE ASSY,RH	1	1
- 2	35-115431-33	. . ZEE,LH.	1	1
	35-115431-34	. . ZEE,RH.	1	1
	K1000-832	. . NUTPLATE.	4	1
	AN366F832	. . NUTPLATE.	4	1
	35-115431-611	. ZEE ASSY,LH	1	1
	35-115431-612	. ZEE ASSY,RH	1	1
- 3	35-115431-27	. . ZEE,LH.	1	1
	35-115431-28	. . ZEE,RH.	1	1
	K1000-832	. . NUTPLATE.	4	1
	AN366F832	. . NUTPLATE.	4	1
	95-110015-611	. SUPPORT ASSY,LANDING LIGHT LH	1	1
	95-110015-612	. SUPPORT ASSY,LANDING LIGHT RH	1	1
- 4	95-110015-151	. . SUPPORT,LH.	1	1
	95-110015-152	. . SUPPORT,RH.	1	1
- 5	45-115017-4	. . ANGLE	1	1
	AN366F832	. . NUTPLATE.	8	1
- 6	R 45-115019	. . DOUBLER,LANDING LIGHT LH.	1	1
	45-115019-1	. . DOUBLER,LANDING LIGHT RH.	1	1
	AN366F832	. . NUTPLATE.	3	1
- 7	95-110015-139	. . RIB,LH.	1	1
	95-110015-140	. . RIB,RH.	1	1
- 8	45-115046-4	. . REINFORCEMENT,LH.	1	1
	45-115046-5	. . REINFORCEMENT,RH.	1	1
- 9	45-115046-6	. . SUPPORT,LH.	1	1
	45-115046-7	. . SUPPORT,RH.	1	1
	22A17-82	. . NUTPLATE.	2	1
	AN366F832	. . NUTPLATE.	8	1
- 10	45-115032-2	. . RIB,LH.	1	1
	45-115032-3	. . RIB,RH.	1	1
- 11	45-115032-4	. . SUPPORT,LH.	1	1
	45-115032-5	. . SUPPORT,RH.	1	1
	22A17-82	. . NUTPLATE.	1	1
	AN366F832	. . NUTPLATE.	7	1
	35-115431-5	. RIB ASSY,LH	1	1
	35-115431-6	. RIB ASSY,RH	1	1
- 12	35-115431-15	. . RIB,LH.	1	1
	35-115431-16	. . RIB,RH.	1	1
- 13	35-115431-17	. . ANGLE,LH.	1	1
	35-115431-18	. . ANGLE,RH.	1	1
- 14	35-115431-19	. . ANGLE,LH.	1	1
	35-115431-20	. . ANGLE,RH.	1	1
- 15	35-115431-59	. . ANGLE,LH.	1	1
	35-115431-60	. . ANGLE,RH.	1	1
- 16	35-115431-21	. . ANGLE	1	1

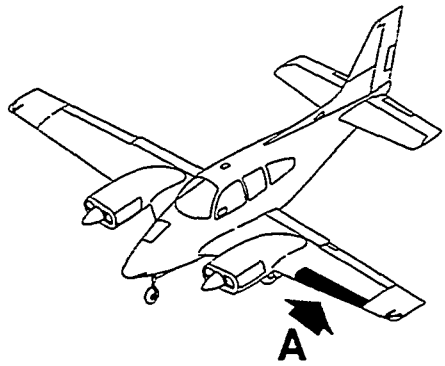

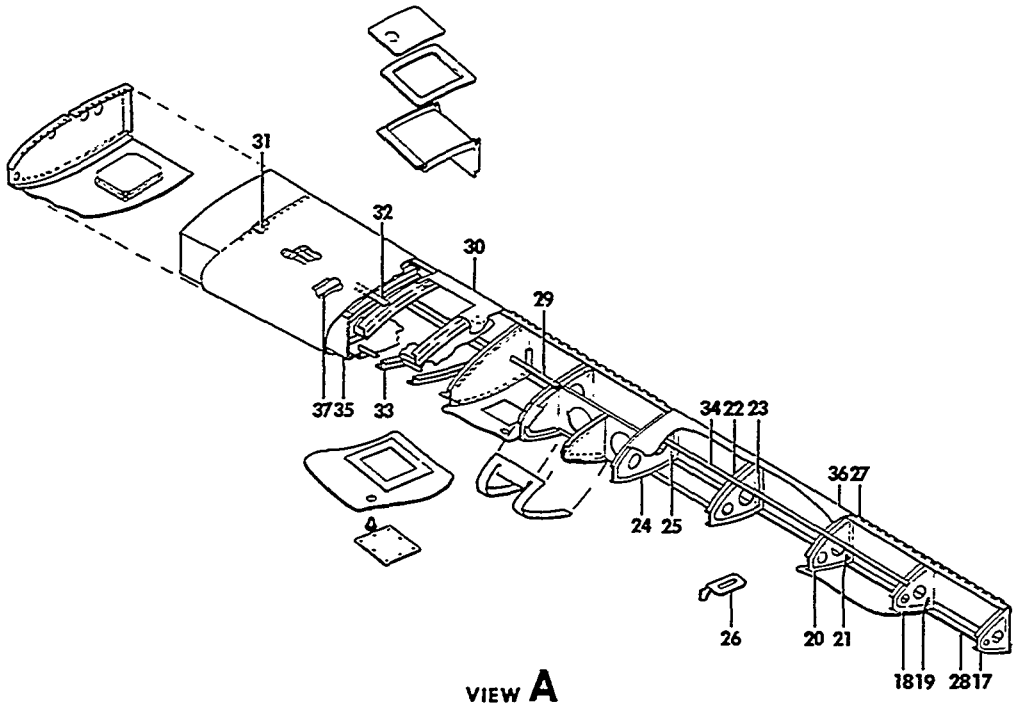

55-34-17

FIGURE 20-10.OUTBOARD LEADING EDGE
/SHEET 2 OF 4 SHEETS/

ATA CODE & INDEX NO.	PART NO.	DESCRIPTION 1 2 3 4 5 6 7	UNITS PER ASSY	USABLE ON CODE
20-10	35-115034	RIB ASSY,LH/STA 191/	1	1
	35-115034-1	RIB ASSY,RH/STA 191/	1	1
- 17	35-115034-2	RIB,LH	1	1
	35-115034-3	RIB,RH	1	1
	MS21059L08K	NUT,ANCHOR	8	1
	35-115035	RIB ASSY,LH/STA 175.281/	1	1
	35-115035-1	RIB ASSY,RH/STA 175.281/	1	1
- 18	35-115035-2	RIB,LH	1	1
	35-115035-3	RIB,RH	1	1
- 19	35-115035-4	ANGLE,LH	1	1
	35-115035-5	ANGLE,RH	1	1
	95-110015-153	RIB ASSY,LH/STA 162.563/	1	1
	95-110015-154	RIB ASSY,RH/STA 162.563/	1	1
- 20	95-110015-143	RIB,LH	1	1
	95-110015-144	RIB,RH	1	1
- 21	35-115036-4	ANGLE,LH	1	1
	35-115036-5	ANGLE,RH	1	1
	95-110015-155	RIB ASSY,LH/STA 148.875/	1	1
	95-110015-156	RIB ASSY,RH/STA 148.875/	1	1
- 22	95-110015-145	RIB,LH	1	1
	95-110015-146	RIB,RH	1	1
- 23	35-115038-4	ANGLE,LH	1	1
	35-115038-5	ANGLE,RH	1	1
	95-110015-157	RIB ASSY,LH/STA 136.188/	1	1
	95-110015-158	RIB ASSY,RH/STA 136.188/	1	1
- 24	95-110015-147	RIB,LH	1	1
	95-110015-148	RIB,RH	1	1
- 25	45-115077-5	ANGLE,LH	1	1
	45-115077-6	ANGLE,RH	1	1
	95-110015-121	DOUBLER ASSY,PITOT MAST MOUNTING LH	1	1
- 26	95-110015-119	DOUBLER,LH	1	1
	H1S832BC100X200	NUTPLATE/SUPERSEDES W1S832BC100/	4	1
- 27	50-110010-28	HINGE,UPPER OUTBD LH	1	1
	50-110010-29	HINGE,UPPER OUTBD RH	1	1
- 28	50-110010-30	HINGE,LOWER OUTBD LH	1	1
	50-110010-31	HINGE,LOWER OUTBD RH	1	1
- 29	95-110041-35	STRINGER,LH	1	1
	95-110041-36	STRINGER,RH	1	1
- 30	95-110041-33	SKIN,LH	1	1
	95-110041-34	SKIN,RH	1	1
- 31	35-115431-9	STRINGER,LH	1	1
	35-115431-10	STRINGER,RH	1	1
- 32	95-110041-11	STRINGER,LH	1	1
	95-110041-12	STRINGER,RH	1	1
- 33	95-110041-19	ZEE,LH	1	1
	95-110041-20	ZEE,RH	1	1
- 34	95-110015-149	STRINGER,LH	1	1
	95-110015-150	STRINGER,RH	1	1
- 35	35-115431-83	SPAR,LH	1	1
	35-115431-84	SPAR,RH	1	1
- 36	95-110015-87	SKIN,LH	1	1
	35-115211-9	SKIN,RH	1	1
	NAS680A06	NUTPLATE,LH/SUPERSEDES AN366F632/	4	1
- 37	35-115431-35	ZEE,LH	1	1
	35-115431-36	ZEE,RH	1	1

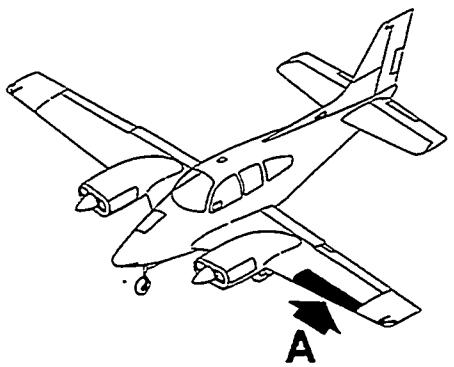

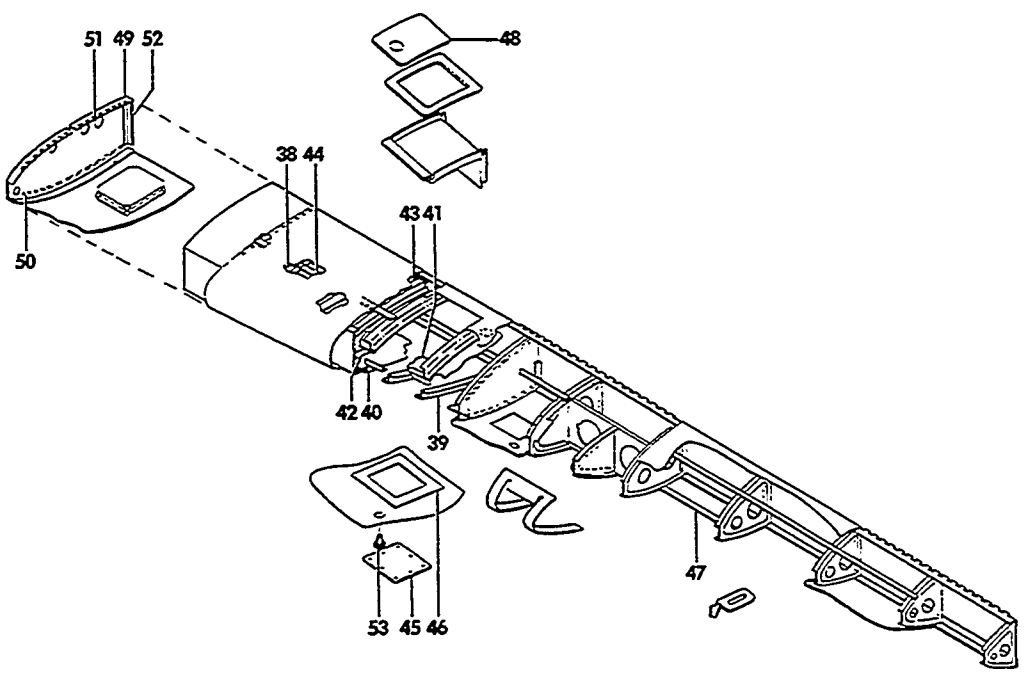

VIEW A

55-34-18

FIGURE 20-10. OUTBOARD LEADING EDGE
/SHEET 3 OF 4 SHEETS/

ATA CODE & INDEX NO.	PART NO.	DESCRIPTION 1 2 3 4 5 6 7	UNITS PER ASSY	USABLE ON CODE
20-10 - 38	35-115431-39	. ZEE,LH.	1	1
	35-115431-40	. ZEE,RH.	1	1
- 39	35-115431-29	. ZEE,LH.	1	1
	35-115431-30	. ZEE,RH.	1	1
- 40	35-115431-23	. ZEE,LH.	1	1
	35-115431-24	. ZEE,RH.	1	1
- 41	35-115431-25	. ZEE	1	1
- 42	95-110041-15	. ZEE,LH.	1	1
	95-110041-16	. ZEE,RH.	1	1
- 43	95-110041-17	. ZEE,LH.	1	1
	95-110041-18	. ZEE,RH.	1	1
- 44	95-110041-5	. STRINGER,LH	1	1
	95-110041-6	. STRINGER,RH	1	1
- 45	50-110010-163	. DOOR.	1	1
	35-115431-621	. DOUBLER ASSY,OUTBOARD LEADING EDGE LH	1	1
	35-115431-622	. DOUBLER ASSY,OUTBOARD LEADING EDGE RH	1	1
- 46	50-110010-161	. . DOUBLER,LH.	1	1
	50-110010-162	. . DOUBLER,RH.	1	1
	22A38-832BC	. . NUTPLATE/SUPERSEDES 22A38-82BC/	14	1
- 47	95-110015-187	. ANGLE,LH.	1	1
	95-110015-188	. ANGLE,RH.	1	1
		NOTE THE FOLLOWING ITEMS ARE USED WITH THE 112 GALLON FUEL SYSTEM		
- 48	35-115431-93	DOOR,LH	1	1
	35-115431-94	DOOR,RH	1	1
	95-110015-81	RIB ASSY,LH	1	1
	95-110015-82	RIB ASSY,RH	1	1
- 49	95-110015-37	. RIB,LH.	1	1
	95-110015-38	. RIB,RH.	1	1
- 50	50-110064-4	. ANGLE,LH.	1	1
	50-110064-5	. ANGLE,LH.	1	1
- 51	50-110064-6	. ANGLE,LH.	1	1
	50-110064-7	. ANGLE,RH.	1	1
- 52	50-110064-8	ANGLE,LH.	1	1
	50-110064-9	ANGLE,RH.	1	1
- 53	50-920077	FLANGE ASSY	1	1

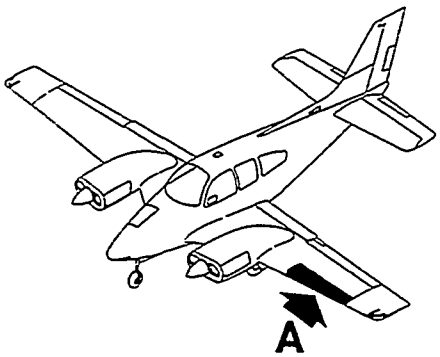

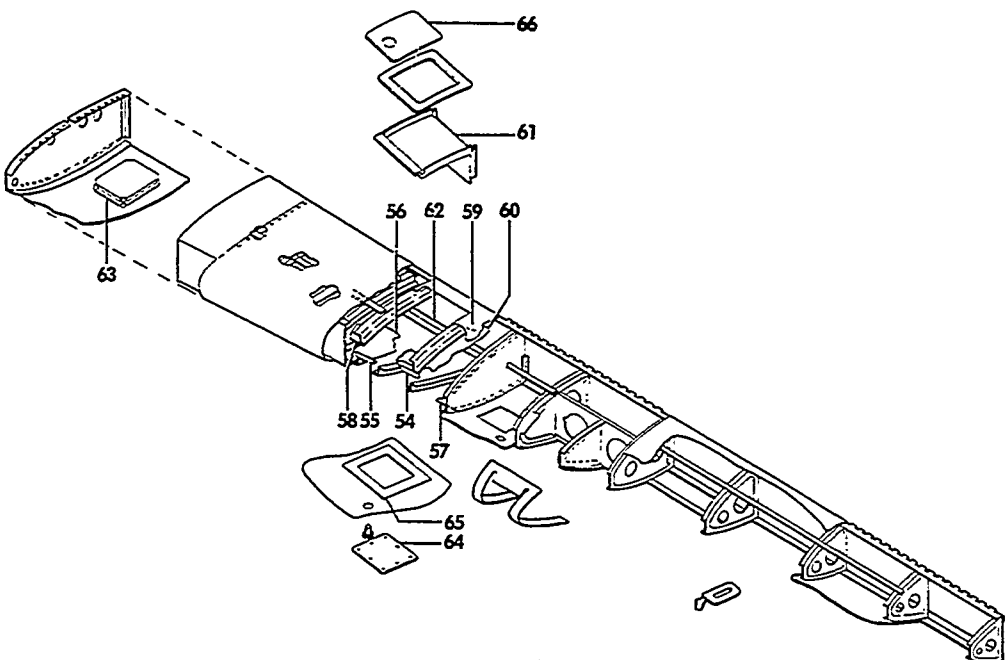

VIEW A

55-34-19

FIGURE 20-10.OUTBOARD LEADING EDGE
/SHEET 4 OF 4 SHEETS/

ATA CODE & INDEX NO.	PART NO.	DESCRIPTION 1 2 3 4 5 6 7	UNITS PER ASSY	USABLE ON CODE
		NOTE THE FOLLOWING ITEMS ARE USED WITH THE 140 GALLON FUEL SYSTEM		
- 54	35-115431-85	ANGLE,LH.	1	1
	35-115431-86	ANGLE,RH.	1	1
- 55	35-115431-87	ANGLE,LH.	1	1
	35-115431-88	ANGLE,RH.	1	1
- 56	35-115431-127	LINER	1	1
- 57	35-115431-47	LINER	1	1
	35-115431-607	LINER ASSY,LH	1	1
	35-115431-608	LINER ASSY,RH	1	1
- 58	35-115431-51	. LINER,LH.	1	1
	35-115431-52	. DOUBLER,RH.	1	1
- 59	50-110081	. RETAINER.	8	1
	35-115431-605	LINER ASSY,LH	1	1
	35-115431-606	LINER ASSY,RH	1	1
- 60	35-115431-49	. LINER,LH.	1	1
	35-115431-50	. LINER,RH.	1	1
	50-110081	. RETAINER.	4	1
	35-115431-613	PAN ASSY,LH	1	1
	35-115431-614	PAN ASSY,RH	1	1
- 61	35-115431-69	. PAN,LH.	1	1
	35-115431-70	. PAN,RH.	1	1
- 62	35-115431-31	. ANGLE	1	1
	95-110041-609	DOOR ASSY	1	1
- 63	95-110041-57	. STAND	1	1
- 64	50-110010-82	. DOOR.	1	1
	AN373F832	. NUTPLATE.	8	1
	50-110010-602	DOUBLER ASSY.	1	1
	50-110010-603	DOUBLER ASSY.	1	1
- 65	50-110010-80	. DOUBLER,LH.	1	1
	50-110010-81	. DOUBLER,RH.	1	1
	22A38-028C100	. NUTPLATE.	8	1
- 66	95-110041-73	DOOR ASSY,LH.	1	1
	95-110041-74	DOOR ASSY,RH.	1	1

CODES OF EFFECTIVITY

1 TC-1 THRU TC-399

"END"

57-20-12
WING OUTBOARD LEADING EDGE
TC-400 THRU TC-1607
TE-1 THRU TE-942 EXCEPT TE-938

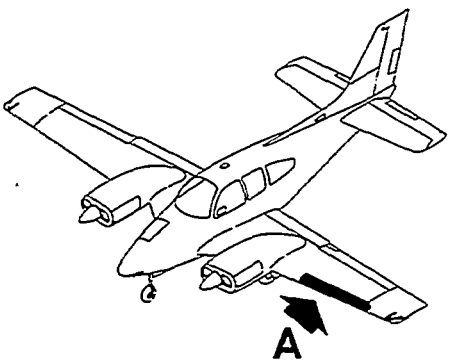

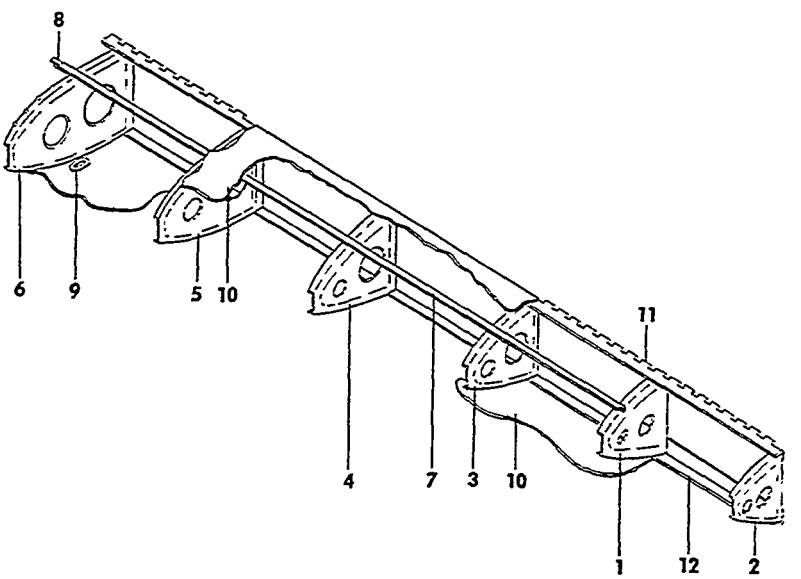

VIEW **A**

55-34-20

FIGURE 20-12.OUTBOARD LEADING EDGE

SUB-SECT UNIT & ITEM NO.	PART NO.	DESCRIPTION 1 2 3 4 5 6 7	UNITS PER ASSY	USABLE ON CODE
20-12	96-110007-605	OUTBOARD LEADING EDGE ASSY,LH	1	1
	96-110007-606	OUTBOARD LEADING EDGE ASSY,RH	1	1
- 1	35-115035	. RIB ASSY,LH/STA 175/.	1	1
	35-115035-1	. RIB ASSY,RH/STA 175/.	1	1
	35-115035-2	. . RIB,LH.	1	1
	35-115035-3	. . RIB,RH.	1	1
	35-115035-4	. . ANGLE,LH.	1	1
	35-115035-5	. . ANGLE,RH.	1	1
- 2	35-115034	. RIB ASSY,LH/STA 191/.	1	1
	35-115034-1	. RIB ASSY,RH/STA 191/.	1	1
	35-115034-2	. . RIB,LH.	1	1
	35-115034-3	. . RIB,RH.	1	1
	MS21059L08K	. . NUT,ANCHOR.	8	1
- 3	35-115036-8	. RIB ASSY,LH/STA 162/.	1	1
	35-115036-9	. RIB ASSY,RH/STA 162/.	1	1
	35-115036-6	. . RIB,LH.	1	1
	35-115036-7	. . RIB,RH.	1	1
	35-115036-4	. . ANGLE,LH.	1	1
	35-115036-5	. . ANGLE,RH.	1	1
- 4	35-115038-8	. RIB ASSY,LH/STA 148/.	1	1
	35-115038-9	. RIB ASSY,RH/STA 148/.	1	1
	35-115038-6	. . RIB,LH.	1	1
	35-115038-7	. . RIB,RH.	1	1
	35-115038-4	. . ANGLE,LH.	1	1
	35-115038-5	. . ANGLE,RH.	1	1
- 5	35-115037-8	. RIB ASSY,LH/STA 136/.	1	1
	35-115037-9	. RIB ASSY,RH/STA 136/.	1	1
	35-115037-6	. . RIB,LH.	1	1
	35-115037-7	. . RIB,RH.	1	1
	35-115037-4	. . ANGLE,LH.	1	1
	35-115037-5	. . ANGLE,RH.	1	1
- 6	35-115046	. RIB ASSY,LH/STA 122/.	1	1
	35-115046-1	. RIB ASSY,RH/STA 122/.	1	1
	35-115046-2	. . RIB,LH.	1	1
	35-115046-3	. . RIB,RH.	1	1
	35-115046-4	. . ANGLE,LH.	1	1
	35-115046-5	. . ANGLE,RH.	1	1
- 7	96-110007-3	. STRINGER,LH	1	1
	96-110007-4	. STRINGER,RH	1	1
- 8	95-110041-13	. ANGLE,LH STRINGER SPLICE.	1	1
	95-110041-14	. ANGLE,RH STRINGER SPLICE.	1	1
- 9	35-361151	. DOUBLER ASSY,PITOT MAST ATTACHING	1	1
	35-361151-2	. . DOUBLER	1	1
	MS21059L08	. . NUTPLATE.	4	1
- 10	35-115431-107	. SKIN,LEADING EDGE LH.	1	1
	35-115431-108	. SKIN,LEADING EDGE RH.	1	1
- 11	35-115431-113	. HINGE,UPPER LH.	1	1
	35-115431-114	. HINGE,UPPER RH.	1	1
- 12	35-115431-115	. HINGE,LOWER LH.	1	1
	35-115431-116	. HINGE,LOWER RH.	1	1
	50-110010-48	. SPLICE,HINGE R & LH/STA 122/.	2	1
	96-110020-1	. REINFORCEMENT,LOWER LH/STA 122 TO 148/.	1	1
	96-110020-2	. REINFORCEMENT,LOWER RH/STA 122 TO 148/.	1	1
	AN366F832	. NUTPLATE/USE WITH LIFT DETECTOR DOUBLER/.	1	1
R	35-361025-1	STALL WARNING INSTL	NP	1

CODES OF EFFECTIVITY

1 TC-400 THRU TC-1607
TE-1 THRU TE-942
EXCEPT TE-938

"END"

57-20-15
REAR SPAR AND TRAILING EDGE

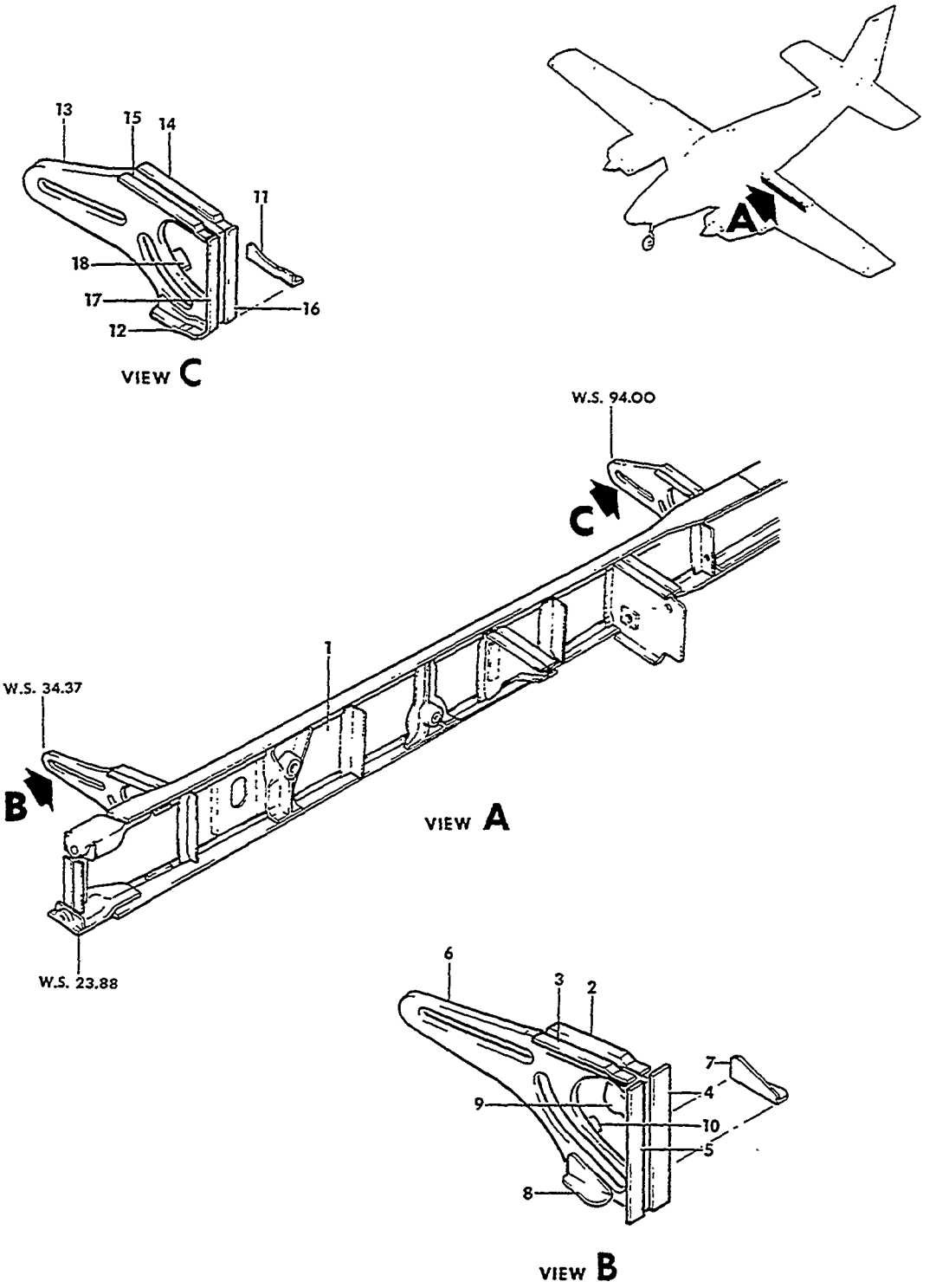

FIGURE 20-15. REAR SPAR AND TRAILING EDGE
/SHEET 1 OF 5 SHEETS/

ATA CODE & INDEX NO.	PART NO.	DESCRIPTION 1 2 3 4 5 6 7	UNITS PER ASSY	USABLE ON CODE
20-15	95-110014-605	REAR SPAR AND TRAILING EDGE ASSY,LH	1	1
	95-110014-705	REAR SPAR AND TRAILING EDGE ASSY,LH	1	2
	95-110014-727	REAR SPAR AND TRAILING EDGE ASSY,LH	1	21
	95-110014-606	REAR SPAR AND TRAILING EDGE ASSY,RH	1	1
	95-110014-706	REAR SPAR AND TRAILING EDGE ASSY,RH	1	2
	95-110014-728	REAR SPAR AND TRAILING EDGE ASSY,RH	1	21
- 1	95-110022-601	. SPAR ASSY,LH REAR/SEE CHAPTER 57-10-30/	1	1
	95-110022-611	. SPAR ASSY,LH REAR/SEE CHAPTER 57-10-30/	1	4
	95-110022-602	. SPAR ASSY,RH REAR/SEE CHAPTER 57-10-30/	1	1
	95-110022-612	. SPAR ASSY,RH REAR/SEE CHAPTER 57-10-30/	1	4
	95-110022-607	. TRACK ASSY,INBD FLAP LH	1	
	95-110022-608	. TRACK ASSY,INBD FLAP RH	1	
- 2	95-110022-37	. . ANGLE,OUTBD LH.	1	
	95-110022-38	. . ANGLE,OUTBD RH.	1	
- 3	95-110022-39	. . ANGLE,INBD LH	1	
	95-110022-40	. . ANGLE,INBD RH	1	
- 4	95-110022-41	. . ANGLE,OUTBD LH.	1	
	95-110022-42	. . ANGLE,OUTBD RH.	1	
- 5	95-110022-43	. . ANGLE,INBD LH	1	
	95-110022-44	. . ANGLE,INBD RH	1	
- 6	95-110022-45	. . TRACK,FLAP/INBOARD/	1	
- 7	95-110022-47	. . ANGLE,OUTBD LH.	1	
	95-110022-48	. . ANGLE,OUTBD RH.	1	
- 8	95-110022-49	. . ANGLE,INBD LH	1	
	95-110022-50	. . ANGLE,INBD RH	1	
- 9	95-110022-71	. . SUPPORT,LH.	1	
	MS21051L08	. . NUTPLATE.	4	
- 10	35-115395	. . SUPPORT,LH & RH	4	
	95-110022-609	. TRACK ASSY,OUTBD FLAP LH.	1	
	95-110022-610	. TRACK ASSY,OUTBD FLAP RH.	1	
- 11	95-110022-51	. . ANGLE,OUTBD LH.	1	
	95-110022-52	. . ANGLE,OUTBD RH.	1	
- 12	95-110022-53	. . ANGLE,INBD LH	1	
	95-110022-54	. . ANGLE,INBD RH	1	
- 13	95-110022-55	. . TRACK,FLAP/OUTBOARD/.	1	
- 14	95-110022-57	. . ANGLE,OUTBD LH.	1	
	95-110022-58	. . ANGLE,OUTBD RH.	1	
- 15	95-110022-59	. . ANGLE,INBD LH	1	
	95-110022-60	. . ANGLE,INBD RH	1	
- 16	95-110022-61	. . ANGLE,OUTBD LH.	1	
	95-110022-62	. . ANGLE,OUTBD RH.	1	
- 17	95-110022-63	. . ANGLE,INBD LH	1	
	95-110022-64	. . ANGLE,INBD RH	1	
- 18	35-115395	. . SUPPORT	3	

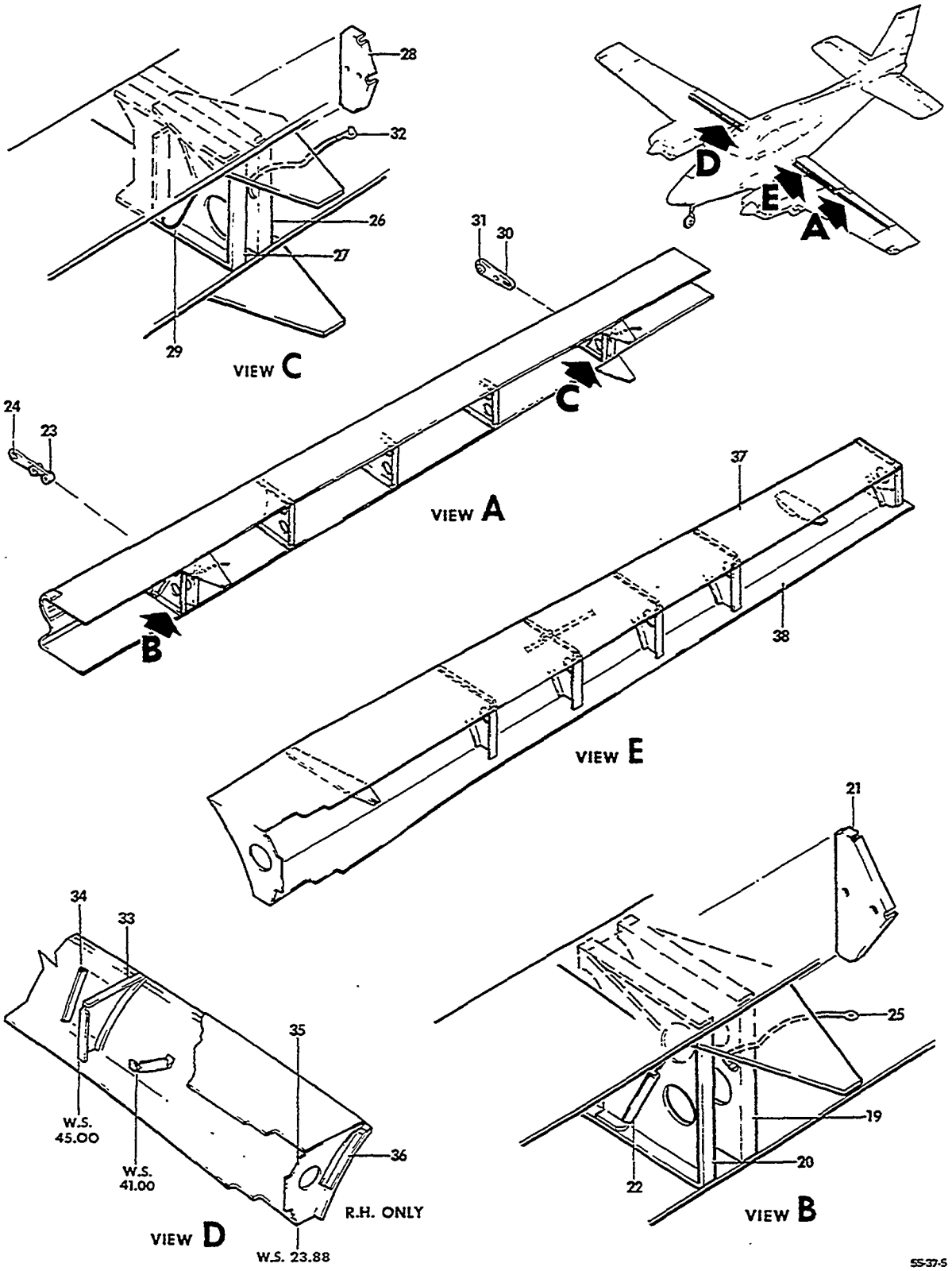

FIGURE 20-15. REAR SPAR AND TRAILING EDGE
/SHEET 2 OF 5 SHEETS/

ATA CODE & INDEX NO.	PART NO.	DESCRIPTION 1 2 3 4 5 6 7	UNITS PER ASSY	USABLE ON CODE
20-15	95-110014-751	. BRACKET ASSY,LH/STA 122/.	1	
	95-110014-752	. BRACKET ASSY,RH/STA 122/.	1	
- 19	95-110014-111	. . RIB,LH.	1	
	95-110014-112	. . RIB,RH.	1	
- 20	60-130017-3	. . RIB,LH.	1	
	60-130017-4	. . RIB,RH.	1	
- 21	35-115160-16	. . REINFORCEMENT,LH.	1	
	35-115160-17	. . REINFORCEMENT,RH.	1	
- 22	60-130017-5	. . REINFORCEMENT,LH.	1	
	60-130017-6	. . REINFORCEMENT,RH.	1	
	35-115147	. . FITTING ASSY,INBD AILERON HINGE	1	
- 23	35-115147-2	. . . FITTING	1	
- 24	NAS505-3	. . . BEARING	1	
- 25	MS25083-2AA8	. . JUMPER,BONDING.	1	
		/ATTACHING PARTS/		
	MS35206-230	. . SCREW	1	
	AN960-6L	. . WASHER.	2	
	MS21042L06	. . NUT	1	
		——+——		
	95-110014-637	. BRACKET ASSY,LH/STA 175/.	1	
	95-110014-638	. BRACKET ASSY,RH/STA 175/.	1	
- 26	95-110014-31	. . BRACKET,LH.	1	
	95-110014-32	. . BRACKET,RH.	1	
- 27	95-110014-29	. . BRACKET,LH.	1	
	95-110014-30	. . BRACKET,RH.	1	
- 28	35-115071-14	. . ANGLE,LH.	1	
	35-115071-15	. . ANGLE,RH.	1	
- 29	35-115071-16	. . ANGLE,LH.	1	
	35-115071-17	. . ANGLE,RH.	1	
	35-115071-12	. . FITTING ASSY,OUTBD AILERON HINGE.	1	
- 30	35-115071-10	. . . FITTING	1	
- 31	NAS505-3	. . . BEARING	1	
- 32	MS25083-2BB6	. . JUMPER,BONDING.	1	5
	MS25083-2AA6	. . JUMPER,BONDING.	1	6
		/ATTACHING PARTS/		
	AN515-632-11	. . SCREW	1	5
	MS35206-232	. . SCREW	1	6
	AN960-6	. . WASHER.	2	5
	AN960-6L	. . WASHER.	2	6
	MS21042L06	. . NUT	1	
		——+——		
	95-110014-626	. RIB ASSY,RH/STA 45/	1	
- 33	95-110014-304	. . RIB	1	
- 34	95-110014-306	. . ANGLE	1	
	95-110036	. RIB ASSY,RH/STA 23/	1	
- 35	95-110036-2	. . RIB	1	
- 36	95-110036-4	. . ANGLE	1	
	95-110014-271	. SKIN,TRAILING EDGE INBD LH.	1	7
	95-110014-695	. SKIN ASSY,TRAILING EDGE INBD LH	1	8
	95-110014-765	. SKIN ASSY,TRAILING EDGE INBD LH	1	9
	95-110014-274	. SKIN,TRAILING EDGE INBD RH.	1	7
	95-110014-698	. SKIN ASSY,TRAILING EDGE INBD RH	1	8
	95-110014-766	. SKIN ASSY,TRAILING EDGE INBD RH	1	9
- 37	95-110014-947	. . SKIN,LH UPPER HALF/SUPERSEDES 95-110014-419	1	10
	95-110014-423	. . SKIN,LH CONCAVE HALF.	1	10
	95-110014-420	. . SKIN,RH UPPER HALF.	1	8
	95-110014-948	. . SKIN,RH UPPER HALF.	1	9
	95-110014-424	. . SKIN,RH CONCAVE HALF.	1	10
- 38	95-110014-323	. . SKIN,LH LOWER HALF.	1	
	95-110014-324	. . SKIN,RH LOWER HALF.	1	

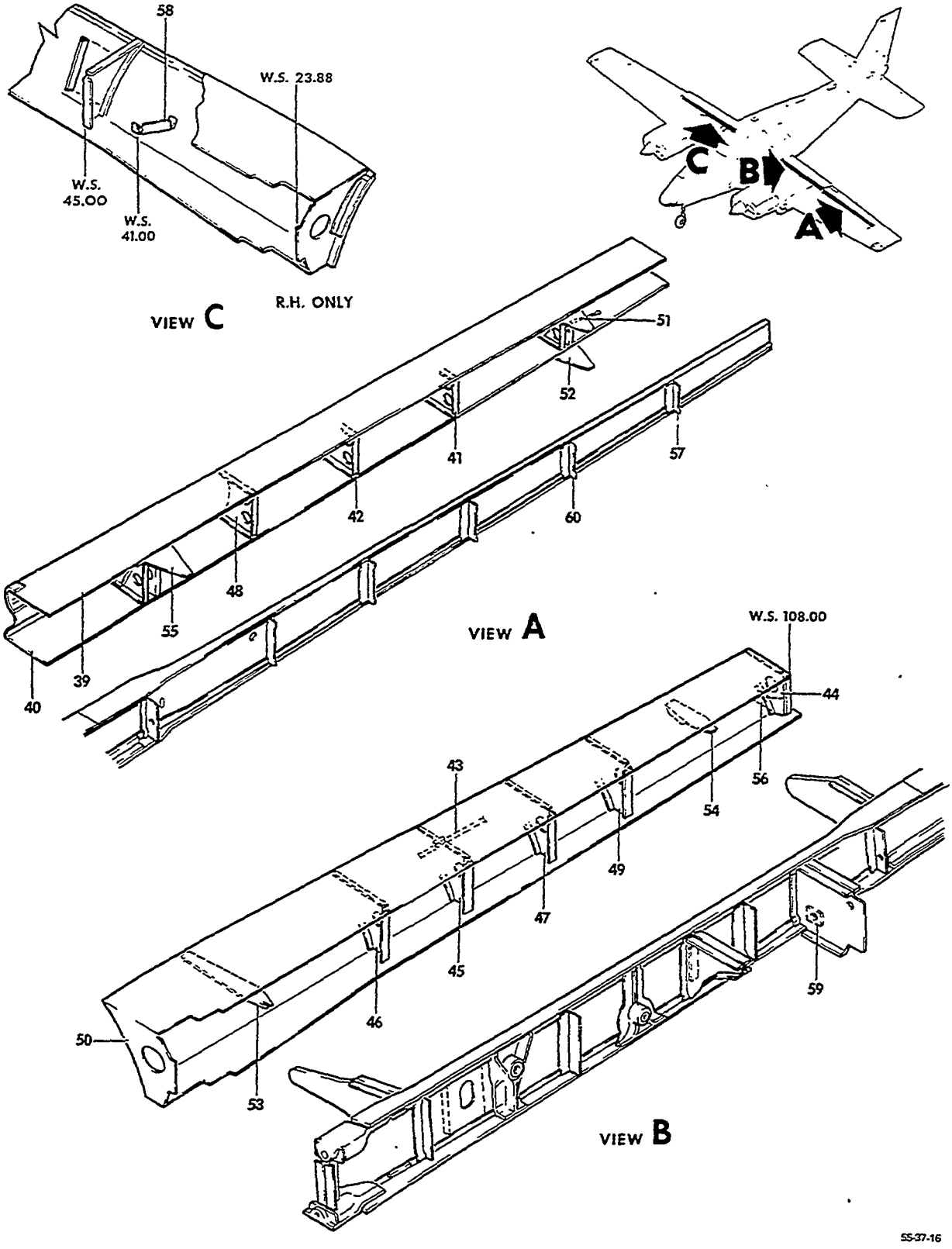

FIGURE 20-15.REAR SPAR AND TRAILING EDGE
/SHEET 3 OF 5 SHEETS/

ATA CODE & INDEX NO.	PART NO.	DESCRIPTION 1 2 3 4 5 6 7	UNITS PER ASSY	USABLE ON CODE
20-15 - 39	95-110014-565	. SKIN ASSY,UPPER TRAILING EDGE OUTBD LH. . . .	1	
	95-110014-566	. SKIN ASSY,UPPER TRAILING EDGE OUTBD RH. . . .	1	
	95-110014-199	. . SKIN,LH UPPER	1	
	95-110014-200	. . SKIN,RH UPPER	1	
	95-110014-553	. . DOUBLER	1	
	95-110014-555	. . DOUBLER	1	
	95-110014-557	. . DOUBLER	1	
- 40	95-110014-567	. SKIN ASSY,LOWER TRAILING EDGE OUTBD LH. . . .	1	
	95-110014-568	. SKIN ASSY,LOWER TRAILING EDGE OUTBD RH. . . .	1	
	95-110014-211	. . SKIN,LOWER TRAILING EDGE OUTBD LH	1	
	95-110014-212	. . SKIN,LOWER TRAILING EDGE OUTBD RH	1	
	95-110014-559	. . DOUBLER	1	
	95-110014-561	. . DOUBLER	1	
	95-110014-563	. . DOUBLER	1	
	MS21047L06	. NUTPLATE.	2	
- 41	95-110014-41	. RIB,LH/STA 162/	1	
	95-110014-42	. RIB,RH/STA 162/	1	
- 42	95-110014-63	. RIB,LH/STA 148/	1	
	95-110014-64	. RIB,RH/STA 148/	1	
- 43	95-110014-369	. STRINGER,LH	1	11
	95-110014-941	. STRINGER,LH	1	9
	95-110014-943	. STRINGER,LH	1	9
	95-110014-945	. STRINGER,LH	1	9
	95-110014-371	. STRINGER,RH	1	11
	95-110014-942	. STRINGER,RH	1	9
	95-110014-949	. STRINGER,RH	1	9
- 44	95-110014-119	. RIB,LH/STA 108/	1	
	95-110014-120	. RIB,RH/STA 108/	1	
- 45	95-110014-129	. RIB,LH/STA 55/.	1	
	95-110014-130	. RIB,RH/STA 55/.	1	
- 46	95-110014-135	. RIB,LH/STA 45/.	1	
- 47	95-110014-153	. RIB,LH/STA 66/.	1	
	95-110014-154	. RIB,RH/STA 66/.	1	
- 48	95-110014-167	. RIB,LH/STA 136/	1	
	95-110014-168	. RIB,RH/STA 136/	1	
- 49	95-110014-191	. RIB,LH/STA 80/.	1	
	95-110014-192	. RIB,RH/STA 80/.	1	
- 50	95-110037	. RIB,LH/STA 23/.	1	
- 51	95-110014-27	. GUSSET,UPPER LH/STA 175/.	1	
	95-110014-28	. GUSSET,UPPER RH/STA 175/.	1	
- 52	95-110014-245	. GUSSET,LOWER LH/STA 175/.	1	
	95-110014-246	. GUSSET,LOWER RH/STA 175/.	1	
- 53	95-110014-277	. GUSSET,UPPER LH/STA 34/	1	
- 54	95-110014-279	. GUSSET,UPPER LH/STA 94/	1	
	95-110014-280	. GUSSET,UPPER RH/STA 94/	1	
- 55	95-110014-293	. GUSSET,UPPER LH/STA 122/.	1	
	95-110014-294	. GUSSET,UPPER RH/STA 122/.	1	
- 56	95-110014-121	. BRACKET,LH/STA 108/	1	
	95-110014-122	. BRACKET,RH/STA 108/	1	
- 57	95-110014-37	. ANGLE,MAIN RIB LH/STA 175/.	1	
	95-110014-38	. ANGLE,MAIN RIB RH/STA 175/.	1	
- 58	35-115150-1	. SUPPORT,RH.	1	
- 59	95-521000-27	. FAIRLEAD,LH	1	
- 60	95-110014-61	. ANGLE,MAIN RIB LH/STA 162/.	1	
	95-110014-62	. ANGLE,MAIN RIB RH/STA 162/.	1	

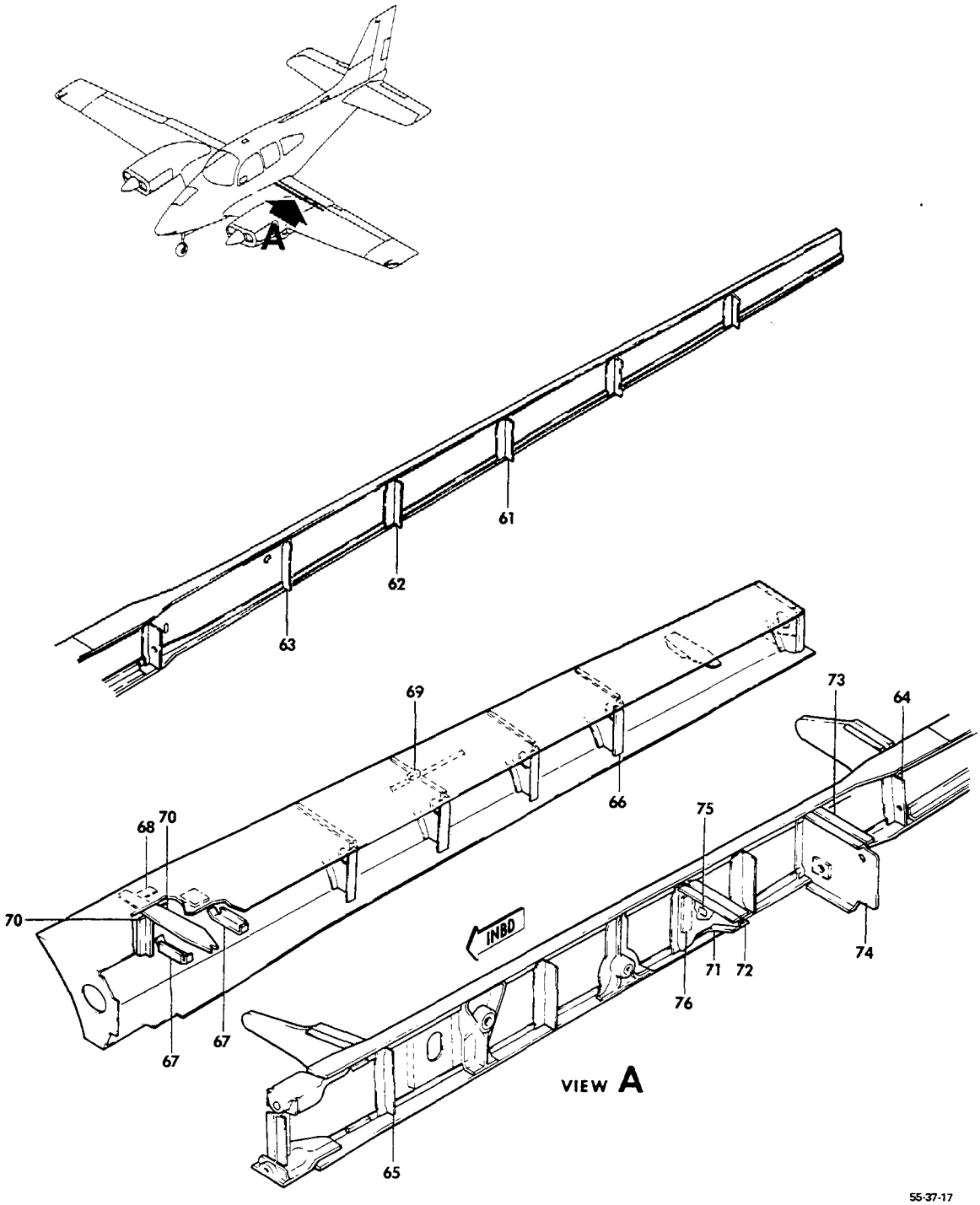

FIGURE 20-15.REAR SPAR AND TRAILING EDGE
/SHEET 4 OF 5 SHEETS/

ATA CODE & INDEX NO.	PART NO.	DESCRIPTION 1 2 3 4 5 6 7	UNITS PER ASSY	USABLE ON CODE
20-15 - 61	95-110014-73	. ANGLE,MAIN RIB LH/STA 148/.	1	
	95-110014-74	. ANGLE,MAIN RIB RH/STA 148/.	1	
- 62	95-110014-89	. ANGLE,MAIN RIB LH/STA 136/.	1	
	95-110014-90	. ANGLE,MAIN RIB RH/STA 136/.	1	
- 63	95-110014-929	. DOUBLER,MAIN RIB LH/STA 122/.	1	
	95-110014-930	. DOUBLER,MAIN RIB RH/STA 122/.	1	
- 64	95-110014-183	. ANGLE,MAIN RIB LH/STA 94/	1	
	95-110014-184	. ANGLE,MAIN RIB RH/STA 94/	1	
- 65	95-110030-5	. ANGLE,MAIN RIB LH/STA 34/	1	13
	95-110030-11	. ANGLE,MAIN RIB LH/STA 34/	1	14
	95-110039-3	. ANGLE,MAIN RIB RH/STA 34/	1	13
	95-110039-5	. ANGLE,MAIN RIB RH/STA 34/	1	14
- 66	95-110014-193	. ANGLE,TRAILING EDGE LH/STA 80/.	1	
	95-110014-194	. ANGLE,TRAILING EDGE RH/STA 80/.	1	
- 67	35-115236	. SUPPORT/1 REQUIRED LH/2 REQUIRED RH/.	1	
- 68	35-115301-22	. CHANNEL,LH.	1	
- 69	95-110014-375	. CLIP/4 REQUIRED LH/3 REQUIRED RH/	4	11
- 70	95-110014-373	. CLIP/4 REQUIRED LH/2 REQUIRED RH/.	4	
- 71	95-980001-19	. TIE,SPAR INBD LH.	1	
	95-980001-20	. TIE,SPAR INBD RH.	1	
- 72	95-980001-209	. TIE,SPAR INBD LH.	1	
	95-980001-210	. TIE,SPAR INBD RH.	1	
- 73	95-980001-115	. TIE,SPAR OUTBD LH	1	
	95-980001-116	. TIE,SPAR OUTBD RH	1	
- 74	95-980001-117	. TIE,SPAR OUTBD LH	1	
	95-980001-118	. TIE,SPAR OUTBD RH	1	
- 75	95-980001-211	. REINFORCEMENT	1	
- 76	95-980001-113	. FILLER,INBD	1	

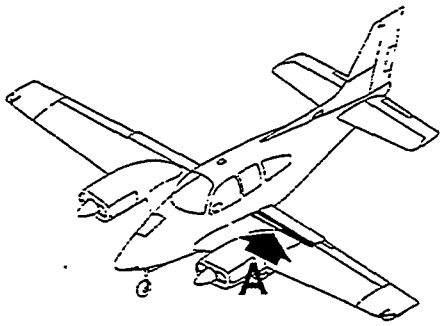

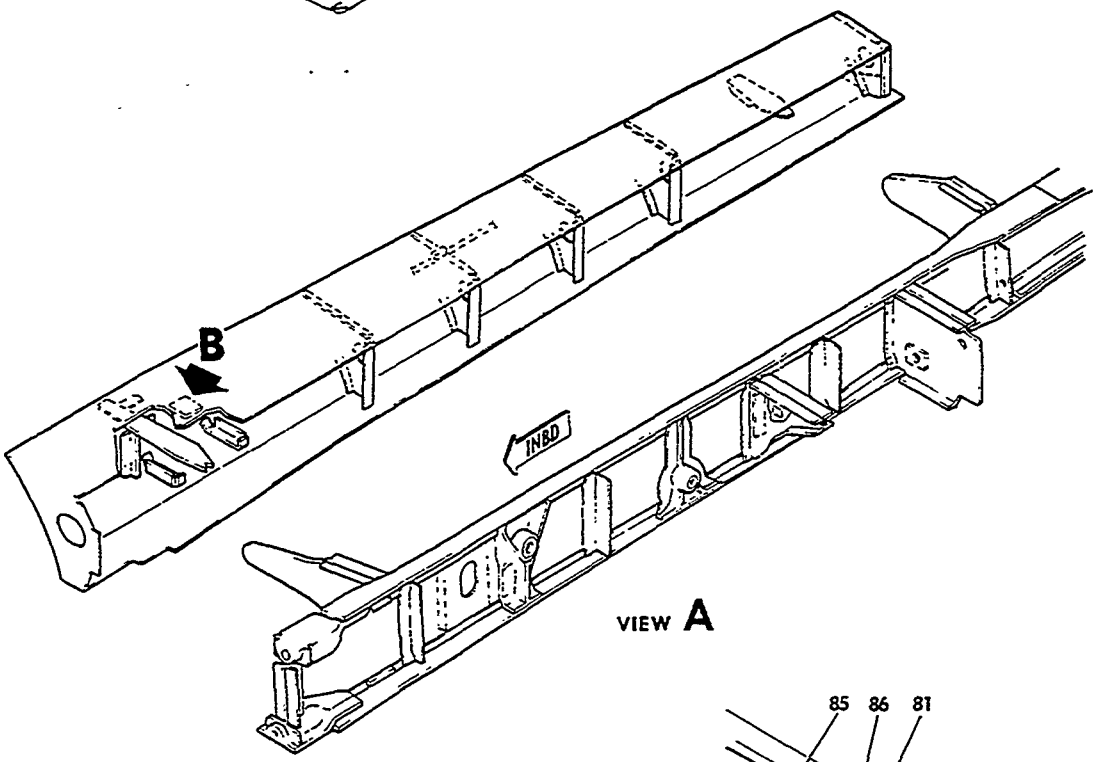

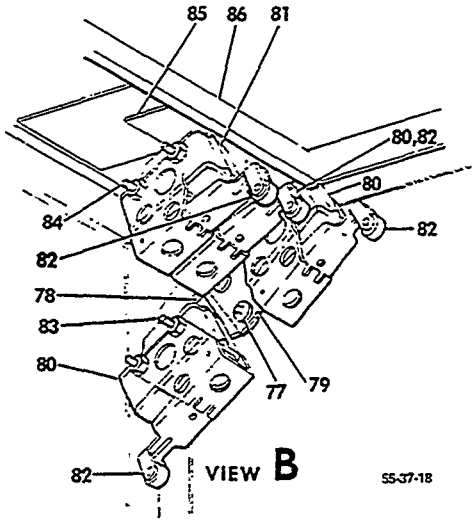

FIGURE 20-15. REAR SPAR AND TRAILING EDGE
/SHEET 5 OF 5 SHEETS/

ATA CODE & INDEX NO.	PART NO.	DESCRIPTION 1 2 3 4 5 6 7	UNITS PER ASSY	USABLE ON CODE
20-15	96-361013	SWITCH INSTALLATION,FLAP LIMIT.	NP	18
	96-360011	SWITCH INSTALLATION,FLAP LIMIT.	NP	15
	96-360011-15	SWITCH INSTALLATION,FLAP LIMIT.	NP	16
	45-361116	SWITCH ASSY,FLAP UP LIMIT/LH ONLY/.	1	17
	45-361117	SWITCH ASSY,FLAP DOWN LIMIT/LH ONLY/.	1	17
	96-361013-601	. SWITCH ASSY,FLAP LIMIT.	1	18
	96-361011-601	. SWITCH ASSY,FLAP LIMIT.	1	3
		/ATTACHING PARTS/		
- 77	MS35206-245	. SCREW/SUPERSEDES AN515-8R7/	4	
	AN960-8	. WASHER.	4	
		----*----		
- 78	45-361116-1	. . BRACKET,LIMIT SWITCH.	1	17
	96-361011-11	. . BRACKET,LIMIT SWITCH.	1	19
- 79	45-361117-1	. . PLATE,LIMIT SWITCH.	1	17
	96-361011-13	. . BRACKET,LIMIT SWITCH.	1	19
- 80	MS25026-1	. . SWITCH,FLAP LIMIT	2	20
	MS25026-1	. . SWITCH,FLAP LIMIT	4	15
	MS25026-1	. . SWITCH,FLAP LIMIT	3	16
- 81	BZ3AT	. . SWITCH,FLAP LIMIT	1	16
- 82	AN3169-1	. . ACTUATOR,FLAP LIMIT SWITCH.	2	20
	AN3169-1	. . ACTUATOR,FLAP LIMIT SWITCH.	4	3
		/ATTACHING PARTS/		
- 83	MS35206-328	. . SCREW	4	
- 84	MS35206-237	. . SCREW	2	
	MS35206-238	. . SCREW/FOR MS25026-1 & BZ3AT/.	2	
	AN960-6	. . WASHER.	6	
	MS21042L06	. . NUT	6	
		----*----		
- 85	96-361011-7	. BRACKET,LIMIT SWITCH.	1	3
- 86	96-361011-9	. DOUBLER,LIMIT SWITCH BRACKET.	1	3
	35-364238	. FISH PAPER,INSULATING/BZ3AT SWITCH,BRACKET/ .	1	16

CODES OF EFFECTIVITY

1 TC-1 THRU TC-954
2 TC-955 THRU TC-1607
TE-1 THRU TE-757
3 TE-1 THRU TE-942
EXCEPT TE-938
4 TC-955 THRU TC-1607
TE-1 THRU TE-942
EXCEPT TE-938
5 TC-1 THRU TC-1310
TE-1 THRU TE-825
6 TC-1311 THRU TC-1607
TE-826 THRU TE-942
EXCEPT TE-938
7 TC-1 THRU TC-25
8 TC-26 THRU TC-1374
TE-1 THRU TE-831
9 TC-1375 THRU TC-1607
TE-832 THRU TE-942
EXCEPT TE-938
10 TC-26 THRU TC-1607
TE-1 THRU TE-942
EXCEPT TE-938
11 TC-1 THRU TC-1374
TE-1 THRU TE-831
12 TC-1391 THRU TC-1607
TE-829 THRU TE-942
EXCEPT TE-938
13 TC-1 THRU TC-1467
TE-1 THRU TE-874
14 TC-1468 THRU TC-1607
TE-875 THRU TE-942
EXCEPT TE-938
15 TE-1 THRU TE-767
16 TE-768 THRU TE-942
EXCEPT TE-938
17 TC-1 THRU TC-501
18 TC-502 THRU TC-1607
19 TC-502 THRU TC-1607
TE-1 THRU TE-942
EXCEPT TE-938
20 TC-1 THRU TC-1607
21 TE-758 THRU TE-942
EXCEPT TE-938

"END"

57-20-20
WING TIP
TC-1 THRU TC-399

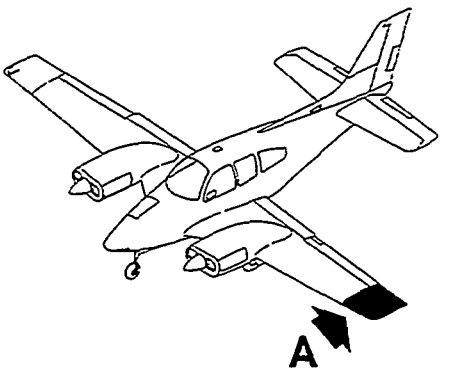

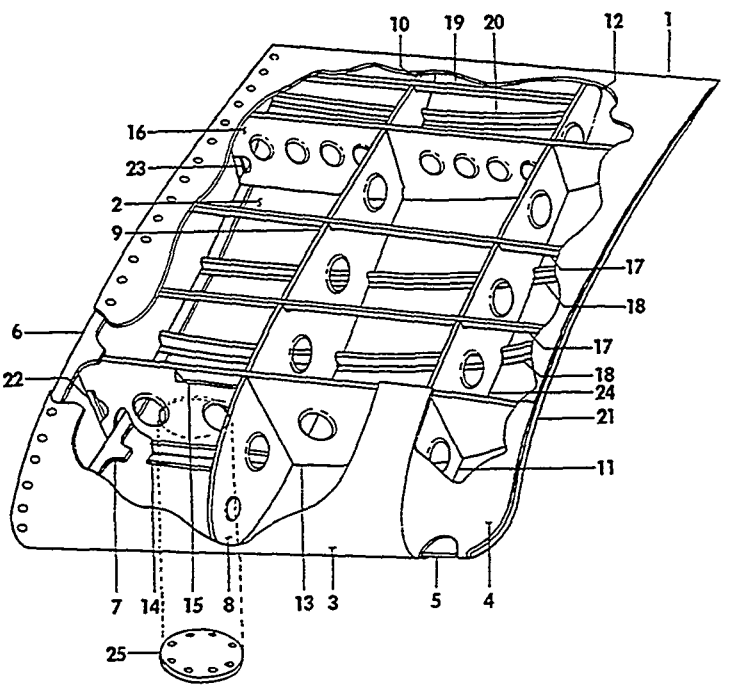

VIEW A

FIGURE 20-20.WING TIP ASSY

ATA CODE & INDEX NO.	PART NO.	DESCRIPTION 1 2 3 4 5 6 7	UNITS PER ASSY	USABLE ON CODE
20-20	95-170000-601	TIP ASSY,LH WING.	1	1
	95-170000-602	TIP ASSY,RH WING.	1	1
- 1	95-170000-3	. SKIN,TOP LH	1	1
	95-170000-4	. SKIN,TOP RH	1	1
- 2	95-170000-5	. SKIN,BOTTOM LH.	1	1
	95-170000-6	. SKIN,BOTTOM RH.	1	1
- 3	95-170000-7	. SKIN,LEADING EDGE LH.	1	1
	95-170000-8	. SKIN,LEADING EDGE RH.	1	1
- 4	95-170000-9	. SKIN,TOP LH	1	1
	95-170000-10	. SKIN,TOP RH	1	1
- 5	95-170000-11	. SKIN,BOTTOM LH.	1	1
	95-170000-12	. SKIN,BOTTOM RH.	1	1
- 6	95-170000-15	. DOUBLER,TOP	1	1
- 7	95-170000-17	. DOUBLER,BOTTOM.	1	1
- 8	95-170000-19	. RIB,LH.	1	1
	95-170000-20	. RIB,RH.	1	1
- 9	95-170000-21	. RIB,LH.	1	1
	95-170000-22	. RIB,RH.	1	1
- 10	95-170000-23	. RIB,LH.	1	1
	95-170000-24	. RIB,RH.	1	1
- 11	95-170000-25	. RIB,LH.	1	1
	95-170000-26	. RIB,RH.	1	1
- 12	95-170000-29	. RIB,LH.	1	1
	95-170000-30	. RIB,RH.	1	1
	95-170000-605	. SPAR ASSY,LH.	1	1
	95-170000-606	. SPAR ASSY,RH.	1	1
- 13	95-170000-31	. . SPAR,LH FWD	1	1
	95-170000-32	. . SPAR,RH FWD	1	1
- 14	95-170000-51	. . ANGLE,LH.	1	1
	95-170000-52	. . ANGLE,RH.	1	1
- 15	95-170000-53	. . ANGLE,LH.	1	1
	95-170000-54	. . ANGLE,RH.	1	1
- 16	95-170000-33	. SPAR,LH AFT	1	1
	95-170000-34	. SPAR,RH AFT	1	1
- 17	95-170000-35	. STRINGER,TOP LH	2	1
	95-170000-36	. STRINGER,TOP RH	2	1
- 18	95-170000-37	. STRINGER,BOTTOM LH.	2	1
	95-170000-38	. STRINGER,BOTTOM RH.	2	1
- 19	95-170000-39	. STRINGER,TOP LH	1	1
	95-170000-40	. STRINGER,TOP RH	1	1
- 20	95-170000-41	. STRINGER,BOTTOM LH.	1	1
	95-170000-42	. STRINGER,BOTTOM RH.	1	1
- 21	95-170000-45	. CAP ASSY,LH	1	1
	95-170000-46	. CAP ASSY,RH	1	1
- 22	95-170000-55	. ANGLE,LH.	1	1
	95-170000-56	. ANGLE,RH.	1	1
- 23	95-170000-57	. ANGLE	1	1
- 24	95-170000-65	. RIB,LH.	1	1
	95-170000-66	. RIB,RH.	1	1
- 25	414-181500-53	. DOOR,ACCESS	1	1
		/ATTACHING PARTS/		
	MS35206-245	. SCREW/SUPERSEDES AN515-8R8/	8	
	MS21047L08	. NUTPLATE.	8	
		——*——		
	MS21051L3	. NUTPLATE.	2	1
	MS21047L3	. NUTPLATE.	1	1
	MS21071L06	. NUTPLATE.	6	1

CODES OF EFFECTIVITY

1 TC-1 THRU TC-399

"END"

57-20-21
WING TIP
TC-400 THRU TC-1600
TE-1 THRU TE-767

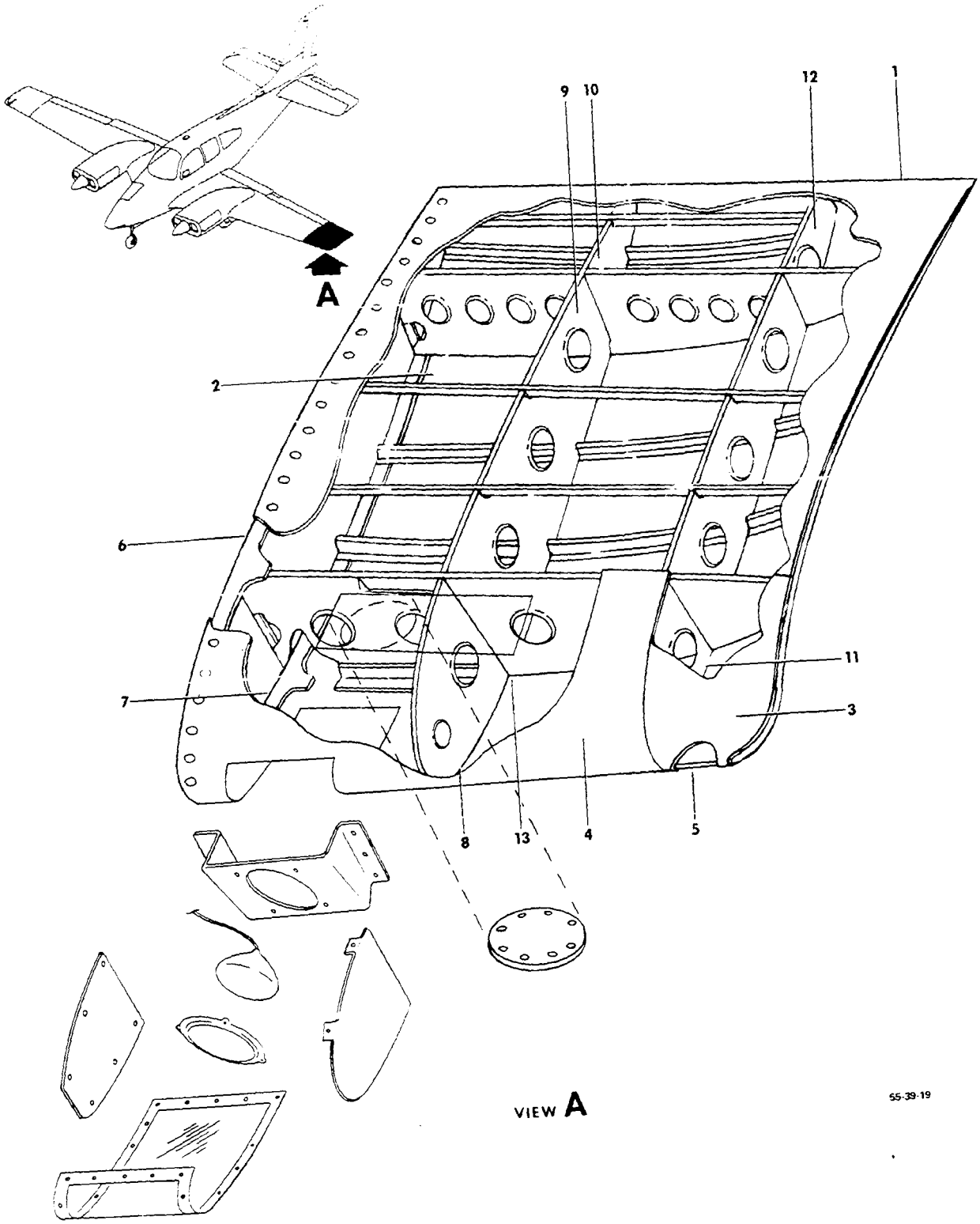

FIGURE 20-21.WING TIP ASSY
/SHEET 1 OF 3 SHEETS/

SUB-SECT UNIT & ITEM NO.	PART NO.	DESCRIPTION 1 2 3 4 5 6 7	UNITS PER ASSY	USABLE ON CODE
20-21	96-170000-603	TIP ASSY,LH WING/LESS PROVISIONS FOR. . . . . STROBE LIGHTS/	1	1
	58-170000-609	TIP ASSY,LH WING/WITH PROVISIONS FOR. . . . . STROBE LIGHTS/	1	2
	96-170000-609	TIP ASSY,LH WING/WITH PROVISIONS FOR. . . . . STROBE LIGHTS/	1	3
	96-170000-604	TIP ASSY,RH WING/LESS PROVISIONS FOR. . . . . STROBE LIGHTS/	1	1
	58-170000-610	TIP ASSY,RH WING/WITH PROVISIONS FOR. . . . . STROBE LIGHTS/	1	2
	96-170000-610	TIP ASSY,RH WING/WITH PROVISIONS FOR. . . . . STROBE LIGHTS/	1	3
- 1	95-170000-3	. SKIN,TOP LH	1	1
	95-170000-165	. SKIN,TOP LH	1	4
	95-170000-4	. SKIN,TOP RH	1	1
	95-170000-166	. SKIN,TOP RH	1	4
- 2	95-170000-5	. SKIN,BOTTOM LH.	1	1
	60-360015-9	. SKIN,BOTTOM LH.	1	4
	95-170000-6	. SKIN,BOTTOM RH.	1	1
	60-360015-10	. SKIN,BOTTOM RH.	1	4
- 3	95-170000-9	. SKIN,TOP LH	1	5
	95-170000-10	. SKIN,TOP RH	1	5
- 4	96-170000-11	. SKIN,LEADING EDGE LH/LESS STROBE LIGHT/ . . .	1	1
	R 60-360015-7	. SKIN,LEADING EDGE LH/WITH STROBE LIGHT/ . . .	1	3
	96-170000-12	. SKIN,LEADING EDGE RH/LESS STROBE LIGHT/ . . .	1	1
	60-360015-8	. SKIN,LEADING EDGE RH/WITH STROBE LIGHT/ . . .	1	3
- 5	95-170000-11	. SKIN,BOTTOM LH/LESS STROBE LIGHT/	1	1
	95-170000-127	. SKIN,BOTTOM LH/WITH STROBE LIGHT/	1	3
	95-170000-12	. SKIN,BOTTOM RH/LESS STROBE LIGHT/	1	1
	95-170000-128	. SKIN,BOTTOM RH/WITH STROBE LIGHT/	1	3
- 6	95-170000-15	. DOUBLER,TOP LH & RH	1	5
- 7	95-170000-17	. DOUBLER,BOTTOM LH & RH.	1	5
- 8	95-170000-19	. RIB,LH.	1	5
	95-170000-20	. RIB,RH.	1	5
- 9	95-170000-21	. RIB,LH.	1	5
	95-170000-22	. RIB,RH.	1	5
- 10	95-170000-23	. RIB,LH.	1	5
	95-170000-24	. RIB,RH.	1	5
- 11	95-170000-25	. RIB,LH.	1	5
	95-170000-26	. RIB,RH.	1	5
- 12	95-170000-29	. RIB,LH.	1	5
	95-170000-30	. RIB,RH.	1	5
	95-170000-605	. SPAR ASSY,LH FRONT-LESS STROBE LIGHT/	1	1
	58-170000-605	. SPAR ASSY,LH FRONT/WITH STROBE LIGHT/	1	4
	95-170000-606	. SPAR ASSY,RH FRONT/WITH STROBE LIGHT/	1	1
- 13	95-170000-31	. SPAR,LH/LESS STROBE LIGHT/.	1	1
	95-170000-177	. SPAR,LH/WITH STROBE LIGHT/.	1	4
	95-170000-32	. SPAR,RH/LESS STROBE LIGHT/.	1	1
	95-170000-178	. SPAR,RH/WITH STROBE LIGHT/.	1	4

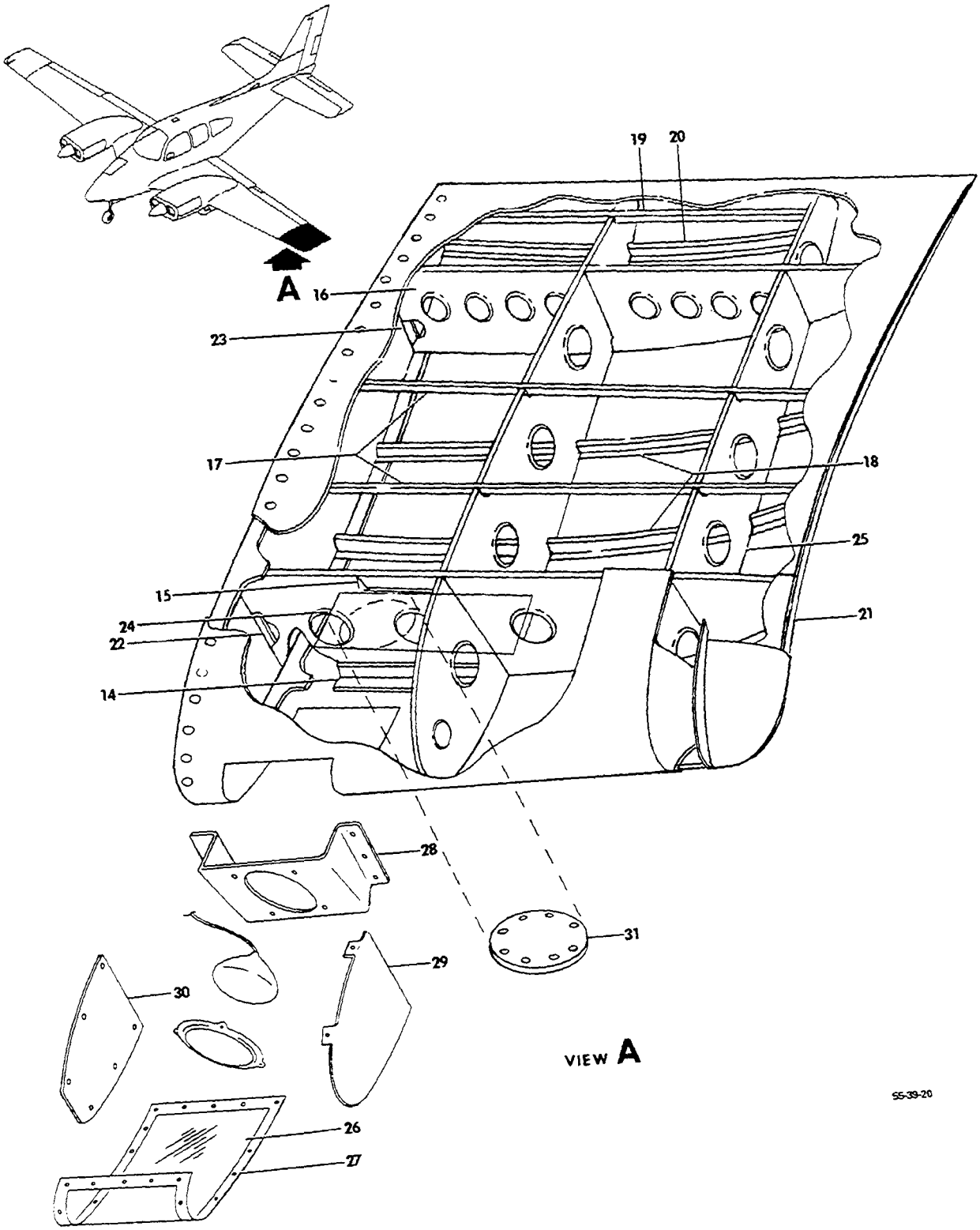

FIGURE 20-21. WING TIP ASSY
/SHEET 2 OF 3 SHEETS/

SUB-SECT UNIT & ITEM NO.	PART NO.	DESCRIPTION 1 2 3 4 5 6 7	UNITS PER ASSY	USABLE ON CODE
20-21 - 14	95-170000-51	. ANGLE,LH.	1	5
	95-170000-52	. ANGLE,RH.	1	5
- 15	95-170000-53	. ANGLE,LH.	1	5
	95-170000-54	. ANGLE,RH.	1	5
- 16	95-170000-33	. SPAR,LH REAR.	1	5
	95-170000-34	. SPAR,RH REAR.	1	5
- 17	95-170000-35	. STRINGER,TOP LH	2	5
	95-170000-36	. STRINGER,TOP RH	2	5
- 18	95-170000-37	. STRINGER,BOTTOM LH.	2	5
	95-170000-38	. STRINGER,BOTTOM RH.	2	5
- 19	95-170000-39	. STRINGER,TOP LH	1	5
	95-170000-40	. STRINGER,TOP RH	1	5
- 20	95-170000-41	. STRINGER,BOTTOM LH.	1	5
	95-170000-42	. STRINGER,BOTTOM RH.	1	5
- 21	95-170000-45	. CAP ASSY,LH	1	1
	95-170000-123	. CAP,LH SPAR	1	4
	95-170000-46	. CAP ASSY,RH	1	1
	95-170000-124	. CAP,RH SPAR	1	4
- 22	95-170000-55	. ANGLE,LH.	1	5
	95-170000-56	. ANGLE,RH.	1	5
- 23	95-170000-57	. ANGLE,LH & RH	1	5
- 24	96-170000-45	. REINFORCEMENT,LH LOWER.	1	4
	96-170000-46	. REINFORCEMENT,RH LOWER.	1	4
- 25	95-170000-65	. RIB,LH.	1	1
	95-170000-115	. RIB,LH.	1	3
	95-170000-66	. RIB,RH.	1	1
	95-170000-116	. RIB,RH.	1	3
	R 96-170000-19	. LENS ASSY,WING TIP LIGHT LH	1	5
	96-170000-20	. LENS ASSY,WING TIP LIGHT RH	1	5
- 26	96-170000-7	. . LENS,LANDING LIGHT LH	1	5
	96-170000-8	. . LENS,LANDING LIGHT RH	1	5
- 27	96-170000-21	. . RETAINER,LENS LH.	1	5
	96-170000-22	. . RETAINER,LENS RH.	1	5
		/ATTACHING PARTS/		
	AN509-8R8	. . SCREW	16	
	MS21049L08K	. . NUTPLATE.	10	
	MS21052L08K	. . NUTPLATE.	6	
		——*——		
	96-170000-605	. BRACKET ASSY,LANDING LIGHT LH	1	5
	96-170000-606	. BRACKET ASSY,LANDING LIGHT RH	1	5
- 28	96-170000-3	. . BRACKET,LH.	1	5
	96-170000-4	. . BRACKET,RH.	1	5
	AN366F832	. . NUTPLATE.	4	5
- 29	96-170000-15	. REFLECTOR,LH.	1	6
	96-170000-61	. RIB,LH.	1	7
	96-170000-16	. REFLECTOR,RH.	1	6
	96-170000-62	. RIB,RH.	1	7
- 30	002-170000-39	. REFLECTOR,LH & RH/SPARE REPLACEMENT FOR	1	7
		96-170000-17 REFLECTOR/		
		/ATTACHING PARTS/		
	AN504-6-4	. SCREW	6	
		——*——		
- 31	414-181500-53	. DOOR,WING TIP ACCESS.	1	1
	58-170000-11	. DOOR,WING TIP ACCESS.	1	3
		/ATTACHING PARTS/		
	MS35206-245	. SCREW	8	
	MS21047L08	. NUTPLATE.	8	
		——*——		

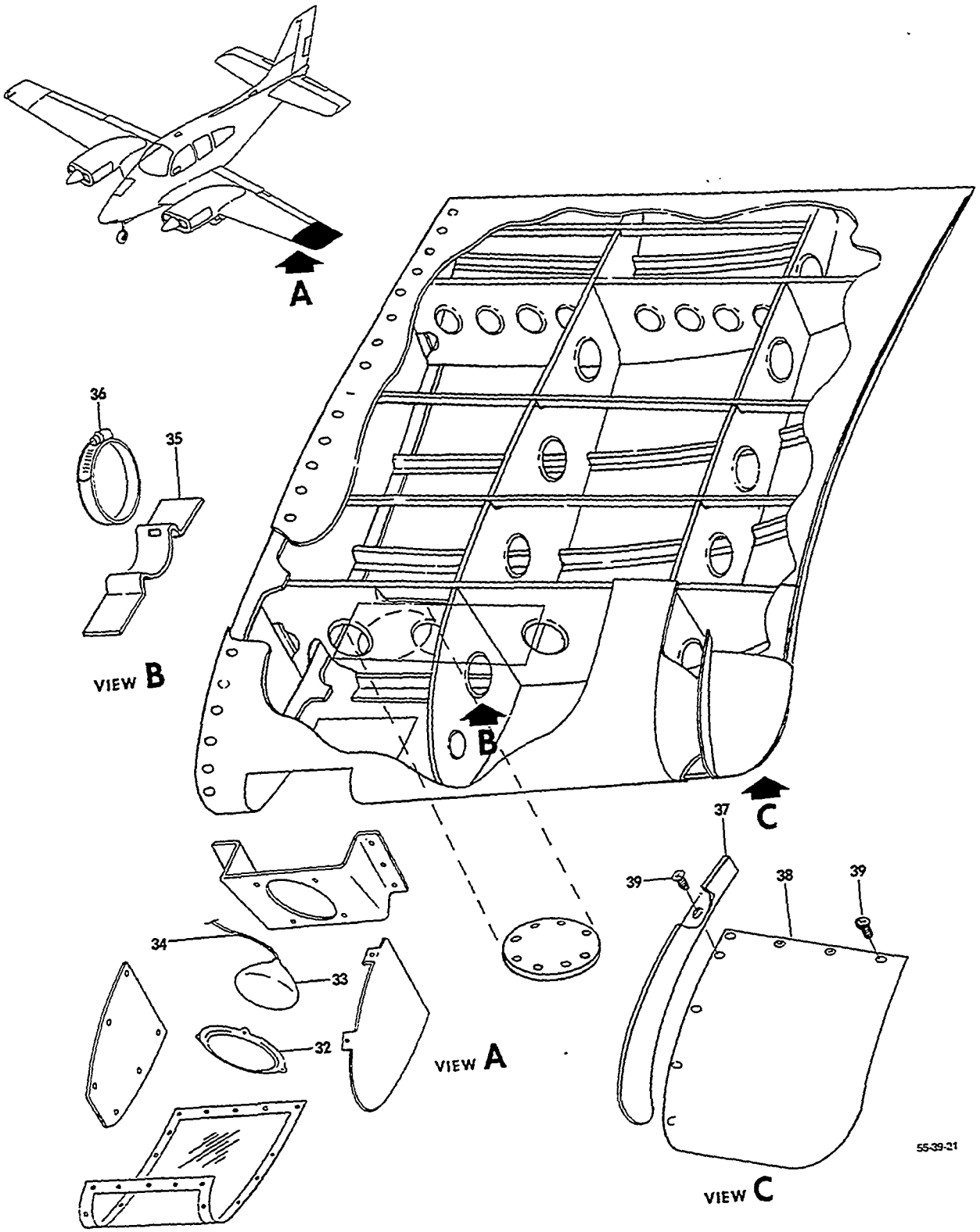

FIGURE 20-21.WING TIP ASSY
/SHEET 3 OF 3 SHEETS/

SUB-SECT UNIT & ITEM NO.	PART NO.	DESCRIPTION 1 2 3 4 5 6 7	UNITS PER ASSY	USABLE ON CODE
20-21 - 32	96-170000-5	RING,LIGHT RETAINER	1	5
		/ATTACHING PARTS/		
	AN525-832R8	SCREW	4	
- 33	4596	LAMP,LANDING LIGHT	1	5
- 34	96-360011-671	WIRE ASSY,WING TIP LH	1	5
	96-360011-672	WIRE ASSY,WING TIP RH	1	5
	MS21051L3	NUTPLATE	2	5
	130909N33/M/	NUTPLATE	1	5
	MS21071L06	NUTPLATE	6	5
- 35	96-170000-47	BRACKET,LH FUEL VENT FLOAT VALVE	1	4
	96-170000-48	BRACKET,RH FUEL CENT FLOAT VALVE	1	4
- 36	AN737TW98	CLAMP	1	4
- 37	95-170000-191	GLARESHIELD,LH/WITH STROBE LIGHTS/	1	4
	95-170000-192	GLARESHIELD,RH/WITH STROBE LIGHTS/	1	4
- 38	95-170000-195	COVER ASSY/WITH STROBE LIGHTS/	1	4
	95-170000-196	COVER ASSY/WITH STROBE LIGHTS/	1	4
		/ATTACHING PARTS/		
- 39	AN509-8R10	SCREW	11	
	NAS390S8	WASHER	11	
	MS21059L08K	NUTPLATE	11	
	R 96-360024-601	LIGHT ASSY,STROBE	1	4
	96-360024-602	LIGHT ASSY,STROBE	1	4

CODES OF EFFECTIVITY

1 TC-400 THRU TC-1350
TE-1 THRU TE-767
2 TC-1299 THRU TC-1350
3 TC-1351 THRU TC-1600
4 TC-1299 THRU TC-1600
5 TC-400 THRU TC-1600
TE-1 THRU TE-767
6 TC-400 THRU TC-1093
TE-1 THRU TE-560
7 TC-1094 THRU TC-1600
TE-561 THRU TE-767

"END"

57-20-22
WING TIP
TE-768 THRU TE-942 EXCEPT TE-938

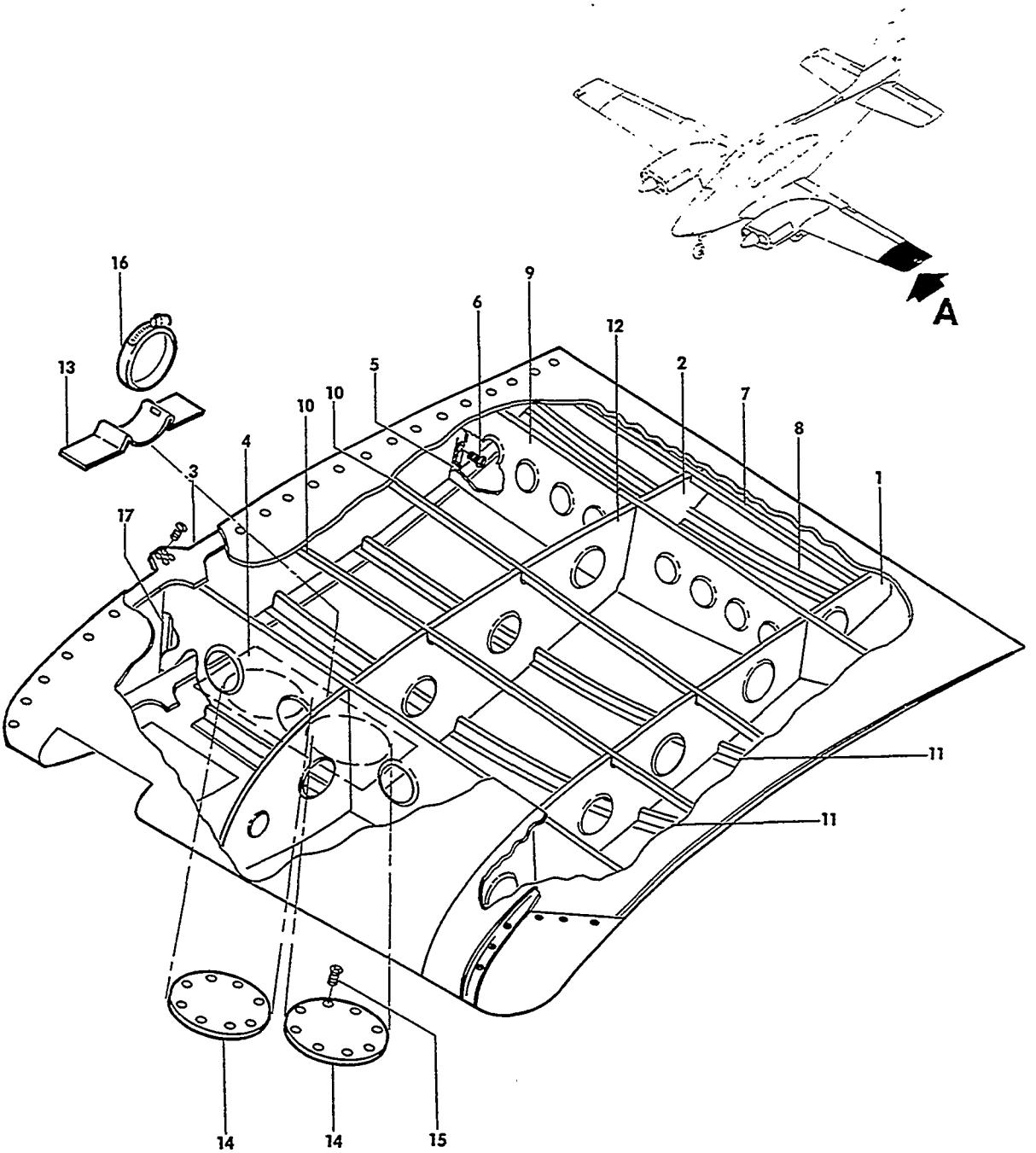

55-39-10

VIEW A

FIGURE 20-22.WING TIP ASSY
/SHEET 1 OF 4 SHEETS/

ATA CODE & INDEX NO.	PART NO.	DESCRIPTION 1 2 3 4 5 6 7	UNITS PER ASSY	USABLE ON CODE
20-22	58-170000-607	TIP ASSY,LH WING.	1	1
	58-170000-608	TIP ASSY,RH WING.	1	1
		/ATTACHING PARTS/		
	AN525-8R8	SCREW	39	
	AN525-8R6	SCREW	8	
	AN960-8	WASHER.	26	
	130909N28/M/	NUT	26	
		----*----		
		NOTE WHEN ORDERING WING TIP ASSY,SPECIFY WITH OR WITHOUT STROBE LIGHTS.		
- 1	95-170000-29	. RIB,LH.	1	1
	95-170000-30	. RIB,RH.	1	1
- 2	95-170000-23	. RIB,LH.	1	1
	95-170000-24	. RIB,RH.	1	1
- 3	95-170000-15	. DOUBLER,UPPER	1	1
- 4	96-170000-45	. REINFORCEMENT,LH LOWER.	1	1
	96-170000-46	. REINFORCEMENT,RH LOWER.	1	1
- 5	95-170000-57	. ANGLE	1	1
		/ATTACHING PARTS/		
- 6	MS35207-263	. SCREW	3	
	MS21051L3	. NUTPLATE.	2	
	130909N33/M/	. NUTPLATE.	1	
		----*----		
- 7	95-170000-39	. STRINGER,LH UPPER	1	1
	95-170000-40	. STRINGER,RH UPPER	1	1
- 8	95-170000-41	. STRINGER,LH LOWER	1	1
	95-170000-42	. STRINGER,RH LOWER	1	1
- 9	95-170000-33	. SPAR,LH REAR.	1	1
	95-170000-34	. SPAR,RH REAR.	1	1
- 10	95-170000-35	. STRINGER,LH UPPER	2	1
	95-170000-36	. STRINGER,RH UPPER	2	1
- 11	95-170000-37	. STRINGER,LH LOWER	2	1
	95-170000-38	. STRINGER,RH LOWER	2	1
- 12	95-170000-21	. RIB,LH.	1	1
	95-170000-22	. RIB,RH.	1	1
- 13	96-170000-47	. BRACKET,LH FUEL VENT FLOAT VALVE.	1	1
	96-170000-48	. BRACKET,RH FUEL VENT FLOAT VALVE.	1	1
- 14	58-170000-11	. DOOR,WING TIP ACCESS.	2	1
		/ATTACHING PARTS/		
- 15	MS24694C4	. SCREW	16	
	MS21049L08	. NUTPLATE.	16	
		----*----		
- 16	AN737TW98-114	. CLAMP	1	1
- 17	95-170000-55	. ANGLE,LH.	1	1
	95-170000-56	. ANGLE,RH.	1	1

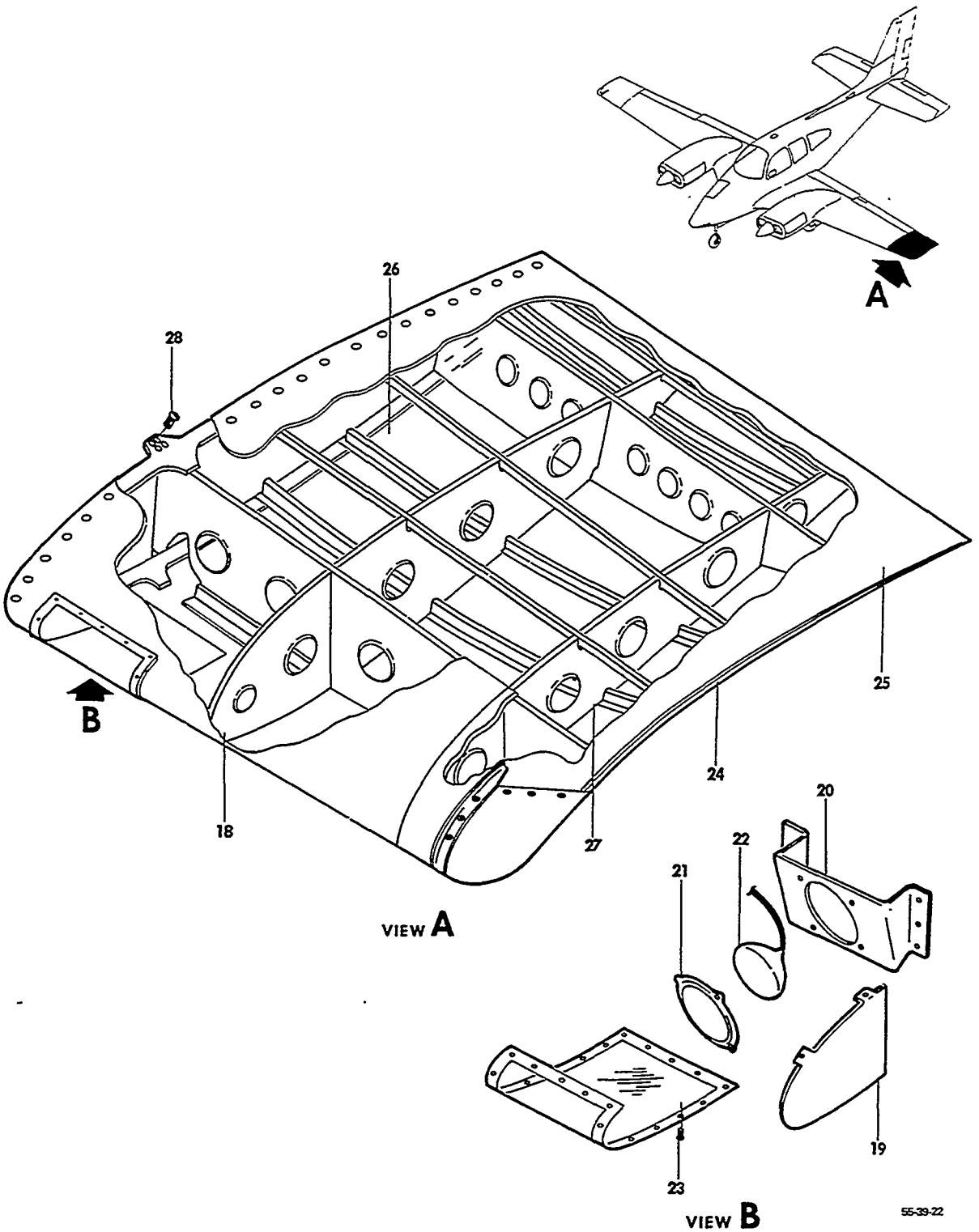

FIGURE 20-22.WING TIP ASSY
/SHEET 2 OF 4 SHEETS/

ATA CODE & INDEX NO.	PART NO.	DESCRIPTION 1 2 3 4 5 6 7	UNITS PER ASSY	USABLE ON CODE
20-22 - 18	95-170000-19	. RIB,LH.	1	1
	95-170000-20	. RIB,RH.	1	1
- 19	96-170000-61	. RIB,LH.	1	1
	96-170000-62	. RIB,RH.	1	1
	96-170000-605	. BRACKET ASSY,LH	1	1
	96-170000-606	. BRACKET ASSY,RH	1	1
- 20	96-170000-3	. . BRACKET,LH.	1	1
	96-170000-4	. . BRACKET,RH.	1	1
	AN366F832	. . NUTPLATE.	4	1
- 21	96-170000-5	. RING,LIGHT RETAINER	1	1
		/ATTACHING PARTS/		
	AN525-8R6	. SCREW	4	
		——*——		
- 22	4596	. LAMP,LANDING LIGHT.	1	1
	000-170032-1	. LENS ASSY,LH/REPLACES 96-170000-65 LENS ASSY/	1	1
	95-970000-601	. LENS ASSY,LH/WITH DEICER/	1	1
	000-170032-2	. LENS ASSY,RH/REPLACES 96-170000-66 LENS ASSY/	1	1
	95-970000-602	. LENS ASSY,RH/WITH DEICER/	1	1
		/ATTACHING PARTS/		
- 23	MS24694S5	. SCREW	16	
	MS21049L08K	. NUTPLATE.	16	
		——*——		
	000-170028-1	. . LENS,LH	1	1
	000-170028-2	. . LENS RH	1	1
	531511	. . TAPE.	AR	1
	000-170024-1	. . RETAINER,LH	1	1
	95-970000-179	. . RETAINER,LH/WITH DEICER/.	1	1
	000-170024-2	. . RETAINER,RH	1	1
	95-970000-180	. . RETAINER,RH/WITH DEICER/.	1	1
		/ATTACHING PARTS/		
	MS24693S1	. . SCREW	10	
	AN960D4	. . WASHER.	10	
	MS21044N04	. . NUT	10	
		——*——		
- 24	95-170000-99	. CAP,LH/LESS STROBE LIGHT/	1	1
	95-170000-123	. CAP,LH/WITH STROBE LIGHT/	1	1
	95-170000-100	. CAP,RH/LESS STROBE LIGHT/	1	1
	95-170000-124	. CAP,RH/WITH STROBE LIGHT/	1	1
- 25	58-170000-7	. SKIN,LH TOP/LESS STROBE LIGHT/.	1	1
	95-170000-165	. SKIN,LH TOP/WITH STROBE LIGHT/.	1	1
	58-170000-8	. SKIN,RH TOP/LESS STROBE LIGHT/.	1	1
	95-170000-166	. SKIN,RH TOP/WITH STROBE LIGHT/.	1	1
- 26	58-170000-5	. SKIN,LH BOTTOM/LESS STROBE LIGHT/	1	1
	60-360015-9	. SKIN,LH BOTTOM/WITH STROBE LIGHT/	1	1
	58-170000-6	. SKIN,RH BOTTOM/LESS STROBE LIGHT/	1	1
	60-360015-10	. SKIN,RH BOTTOM/WITH STROBE LIGHT/	1	1
- 27	95-170000-89	. RIB,LH OUTBD/LESS STROBE LIGHT/	1	1
	95-170000-115	. RIB,LH OUTBD/WITH STROBE LIGHT/	1	1
	95-170000-90	. RIB,RH OUTBD/LESS STROBE LIGHT/	1	1
	95-170000-116	. RIB,RH OUTBD/WITH STROBE LIGHT/	1	1
	95-170000-605	. SPAR ASSY,LH/LESS STROBE LIGHT/	1	1
	58-170000-605	. SPAR ASSY,LH/WITH STROBE LIGHT/	1	1
	95-170000-606	. SPAR ASSY,RH/LESS STROBE LIGHT/	1	1
	58-170000-606	. SPAR ASSY,RH/WITH STROBE LIGHT/	1	1
		/ATTACHING PARTS/		
- 28	AN525-8R6	. SCREW	8	
	NAS697C832	. NUTPLATE.	4	
	NAS696C832	. NUTPLATE.	4	
		——*——		

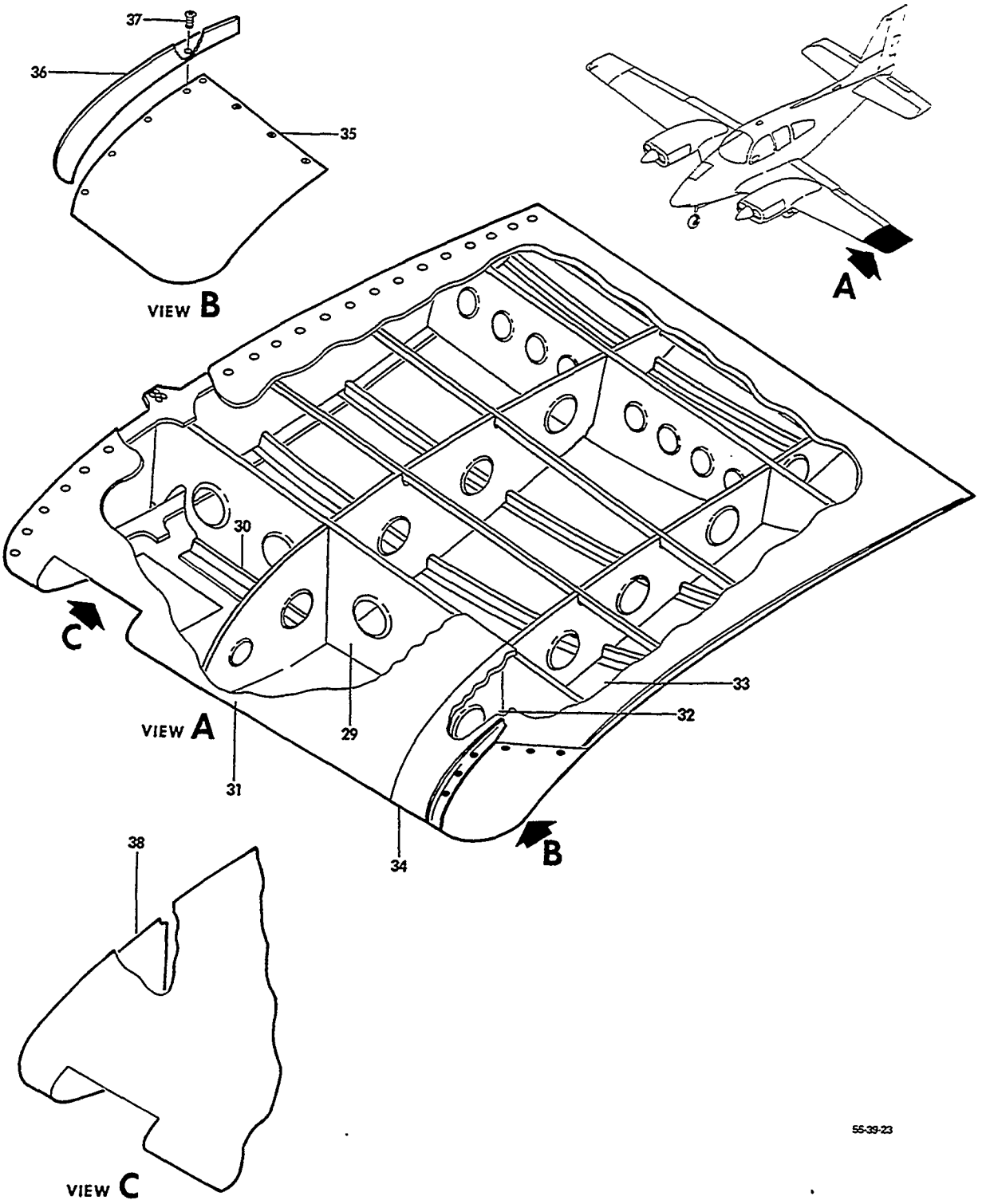

FIGURE 20-22.WING TIP ASSY
/SHEET 3 OF 4 SHEETS/

SUB-SECT UNIT & ITEM NO.	PART NO.	DESCRIPTION 1 2 3 4 5 6 7	UNITS PER ASSY	USABLE ON CODE
20-22 - 29	95-170000-31	. . SPAR,LH/LESS STROBE LIGHT/.	1	1
	95-170000-177	. . SPAR,LH/WITH STROBE LIGHT/.	1	1
	95-170000-32	. . SPAR,RH/LESS STROBE LIGHT/.	1	1
	95-170000-178	. . SPAR,RH/WITH STROBE LIGHT/.	1	1
	MF1000-08	. . NUTPLATE/WITH STROBE LIGHT/	6	1
- 30	95-170000-51	. . ANGLE,LH UPPER.	1	1
	95-170000-52	. . ANGLE,RH UPPER.	1	1
	95-170000-53	. . ANGLE,LH LOWER.	1	1
	95-170000-54	. . ANGLE,RH LOWER.	1	1
- 31	96-170000-11	. SKIN,LH LEADING EDGE/LESS STROBE LIGHT/ . . .	1	1
	60-360015-7	. SKIN,LH LEADING EDGE/WITH STROBE LIGHT/ . . .	1	1
	96-170000-12	. SKIN,RH LEADING EDGE/LESS STROBE LIGHT/ . . .	1	1
	60-360015-8	. SKIN,RH LEADING EDGE/WITH STROBE LIGHT/ . . .	1	1
- 32	95-170000-25	. RIB,LH/LESS STROBE LIGHT/	1	1
	95-170000-175	. RIB ASSY,LH/WITH STROBE LIGHT/.	1	1
	95-170000-26	. RIB,RH/LESS STROBE LIGHT/	1	1
	95-170000-176	. RIB ASSY,RH/WITH STROBE LIGHT/.	1	1
	95-170000-173	. . RIB,LH/WITH STROBE LIGHT/	1	1
	95-170000-174	. . RIB,RH/WITH STROBE LIGHT/	1	1
	MF1000-08	. . NUTPLATE/WITH STROBE LIGHT/	2	1
- 33	95-170000-85	. SKIN,LH BOTTOM/LESS STROBE LIGHT/	1	1
	95-170000-127	. SKIN,LH BOTTOM/WITH STROBE LIGHT/	1	1
	95-170000-86	. SKIN,RH BOTTOM/LESS STROBE LIGHT/	1	1
	95-170000-128	. SKIN,RH BOTTOM/WITH STROBE LIGHT/	1	1
- 34	95-170000-83	. SKIN,LH TOP/LESS STROBE LIGHT/.	1	1
	95-170000-84	. SKIN,RH TOP/LESS STROBE LIGHT/.	1	1
- 35	95-170000-195	. COVER ASSY,LH/WITH STROBE LIGHT/.	1	1
	58-170000-13	. COVER,LH/LESS STROBE LIGHT/	1	1
	95-170000-196	. COVER ASSY,RH/WITH STROBE LIGHT/.	1	1
	58-170000-14	. COVER,RH/LESS STROBE LIGHT/	1	1
- 36	95-170000-191	. GLARESHIELD,LH/WITH STROBE LIGHT/	1	1
	58-170011-1	. GLARESHIELD,LH/LESS STROBE LIGHT/	1	1
	95-170000-192	. GLARESHIELD,RH/WITH STROBE LIGHT/	1	1
	58-170011-2	. GLARESHIELD,RH/LESS STROBE LIGHT/	1	1
		/ATTACHING PARTS/		
- 37	MS35206-246	. SCREW/COVER & GLARESHIELD WITH STROBE LIGHT/.	6	
	AN525-8R8	. SCREW/COVER & GLARESHIELD LESS STROBE LIGHT/.	3	
	AN509-8R8	. SCREW/COVER WITH STROBE LIGHT/.	11	
	AN509-8R10	. SCREW/COVER LESS STROBE LIGHT/.	9	
	AN960-8L	. WASHER/COVER & GLARESHIELD WITH STROBE LIGHT/	6	
	NAS390S8	. WASHER.	11	
	MS21059L08K	. NUTPLATE.	17	
	R 58-360025	. STROBE LIGHT INSTL.	NP	2
	58-360028	. STROBE LIGHT INSTL.	NP	3
- 38	96-170000-49	. REFLECTOR	1	1
		/ATTACHING PARTS/		
	AN51KC6R6	. SCREW	6	
	AN960C6L	. WASHER.	6	

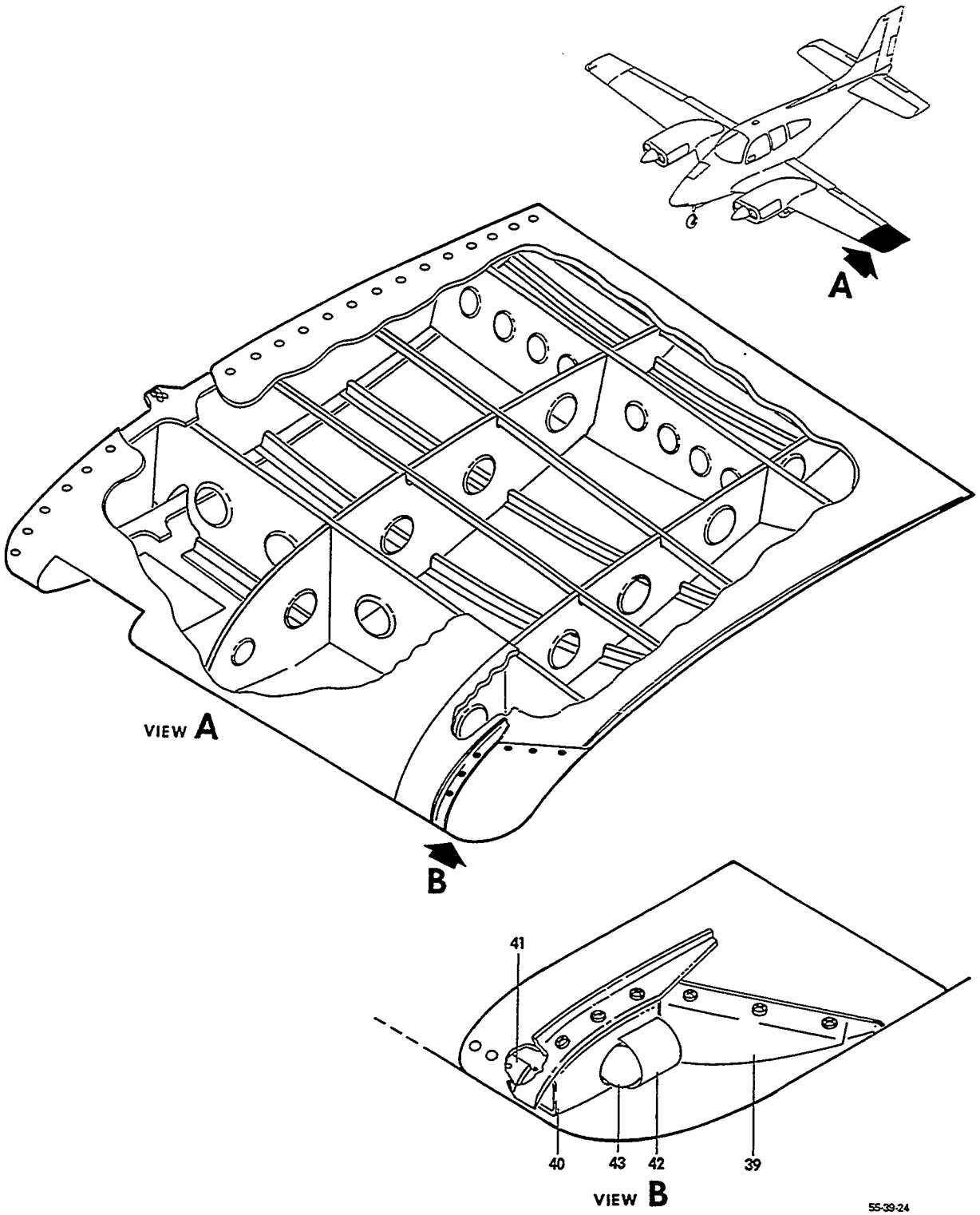

FIGURE 20-22.WING TIP ASSY
/SHEET 4 OF 4 SHEETS/

ATA CODE & INDEX NO.	PART NO.	DESCRIPTION 1 2 3 4 5 6 7	UNITS PER ASSY	USABLE ON CODE
20-22	95-170000-63	. CLOSURE,LH.	1	1
	95-170000-64	. CLOSURE,RH.	1	1
- 39	95-170000-77	. BRACKET,LH/LESS STROBE LIGHT/	1	1
	95-170000-78	. BRACKET,RH/LESS STROBE LIGHT/	1	1
- 40	95-170000-79	. BRACKET,LH/LESS STROBE LIGHT/	1	1
	95-170000-80	. BRACKET,RH/LESS STROBE LIGHT/	1	1
- 41	95-170000-81	. DOUBLER,LH/LESS STROBE LIGHT/	1	1
	95-170000-82	. DOUBLER,RH/LESS STROBE LIGHT/	1	1
- 42	95-170000-87	. SHIELD/LESS STROBE LIGHT/ . . . . . /ATTACHING PARTS/	1	1
	NAS387-632-20	. SCREW	1	
	NAS697A06	. NUTPLATE.	1	
		----*----		
- 43	AN3042-1	. COVER,LH RED/LESS STROBE LIGHT/	1	1
	AN3042-2	. COVER,RH GREEN/LESS STROBE LIGHT/	1	1
	A7512-24	. LAMP,NAVIGATION	1	1
	AN889-1	. GASKET.	1	1
	A1825	. SOCKET ASSY	1	1
	96-360005-679	. HARNESS ASSY,LH/LESS STROBE LIGHT/.	1	1
	96-360005-680	. HARNESS ASSY,RH/LESS STROBE LIGHT/.	1	1

CODES OF EFFECTIVITY

1 TE-768 THRU TE-942 EXCEPT TE-938
2 TE-768 THRU TE-849
3 TE-850 THRU TE-942 EXCEPT TE-938

"END"

57-20-23
WING TIP,EXTENDED
TC-1601 THRU TC-1607

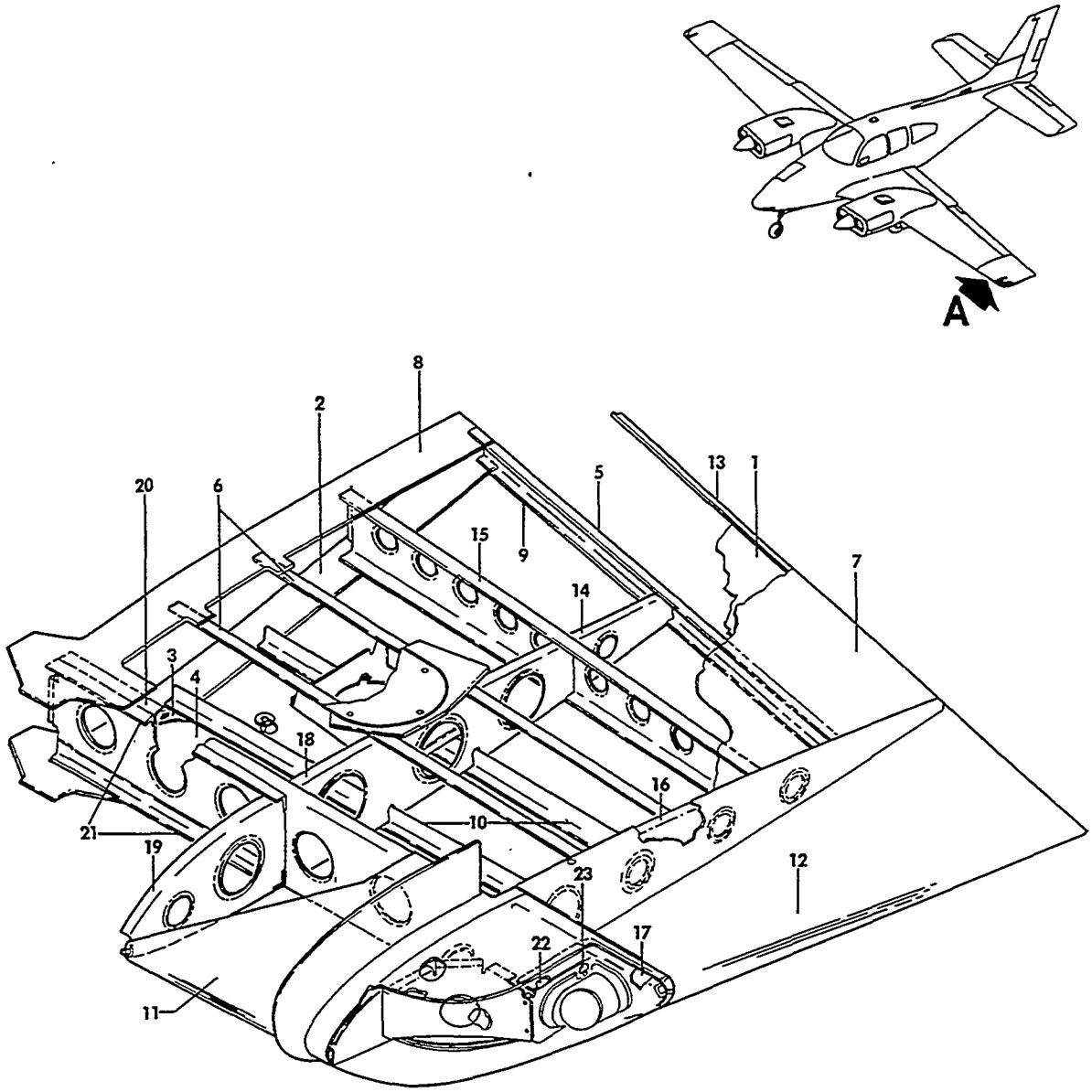

VIEW A

55-39-26

FIGURE 20-23.WING TIP,EXTENDED
/SHEET 1 OF 3 SHEETS/

ATA CODE & INDEX NO.	PART NO.	DESCRIPTION 1 2 3 4 5 6 7	UNITS PER ASSY	USABLE ON CODE
20-23	000-170000-5	WING TIP ASSY,EXTENDED LH	1	1
	000-170000-6	WING TIP ASSY,EXTENDED RH	1	1
	000-170000-1	. STRUCTURE ASSY,LH	1	1
	000-170000-2	. STRUCTURE ASSY,RH	1	1
	000-170000-15	. . SKIN ASSY,LH LOWER	1	1
	000-170000-16	. . SKIN ASSY,RH LOWER	1	1
- 1	000-170000-31	. . . SKIN,LH LOWER	1	1
	000-170000-32	. . . SKIN,RH LOWER	1	1
- 2	000-170018-3	. . . REINFORCEMENT,INBO	1	1
- 3	000-170015-3	. . . REINFORCEMENT,FWD SPAR	1	1
- 4	000-170015-1	. . . COVER,LH	1	1
	000-170015-2	. . . COVER,RH	1	1
		/ATTACHING PARTS/		
	MS27039B807	. . . SCREW	10	
	MS21070L08K	. . . NUTPLATE	9	
	MS21071L08K	. . . NUTPLATE	1	
- 5	000-170022-1	. . . STRINGER	1	1
- 6	000-170023-1	. . . STRINGER	2	1
	MS21070L08K	. . . NUTPLATE	9	1
	MS21071L08K	. . . NUTPLATE	1	1
	000-170000-13	. . SKIN ASSY,LH UPPER	1	1
	000-170000-14	. . SKIN ASSY,RH UPPER	1	1
- 7	000-170000-29	. . . SKIN,LH UPPER	1	1
	000-170000-30	. . . SKIN,RH UPPER	1	1
- 8	000-170018-3	. . . REINFORCEMENT	1	1
- 9	000-170022-3	. . . STRINGER	1	1
- 10	000-170023-1	. . . STRINGER	2	1
- 11	000-170000-21	. . SKIN,LEADING EDGE LH	1	1
	000-170000-22	. . SKIN,LEADING EDGE RH	1	1
- 12	000-170000-55	. . SKIN,TIP LH	1	1
	000-170000-56	. . SKIN,TIP RH	1	1
- 13	000-170000-19	. . WEDGE	1	1
- 14	000-170012-5	. . RIB,CENTER AFT LH	1	1
	000-170012-6	. . RIB,CENTER AFT RH	1	1
- 15	000-170011-3	. . SPAR,REAR LH	1	1
	000-170011-4	. . SPAR,REAR RH	1	1
- 16	000-170013-13	. . RIB,OUTBOARD LH	1	1
	000-170013-14	. . RIB,OUTBOARD RH	1	1
- 17	000-170014-1	. . FORMER,OUTBOARD LH	1	1
	000-170014-2	. . FORMER,OUTBOARD RH	1	1
- 18	000-170012-3	. . RIB,CENTER LH	1	1
	000-170012-4	. . RIB,CENTER RH	1	1
- 19	000-170012-1	. . RIB,CENTER FWD LH	1	1
	000-170012-2	. . RIB,CENTER FWD RH	1	1
	000-170010-7	. . SPAR ASSY,FRONT LH	1	1
	000-170010-8	. . SPAR ASSY,FRONT RH	1	1
- 20	000-170010-9	. . . SPAR,LH	1	1
	000-170010-10	. . . SPAR,RH	1	1
- 21	000-170010-5	. . . ANGLE,FRONT SPAR	2	1
	000-170016-1	. . BRACKET ASSY,LH	1	1
	000-170016-2	. . BRACKET ASSY,RH	1	1
- 22	000-170016-3	. . . BRACKET,LH	1	1
	000-170016-4	. . . BRACKET,RH	1	1
- 23	MS21073L04K	. . . NUTPLATE	3	1

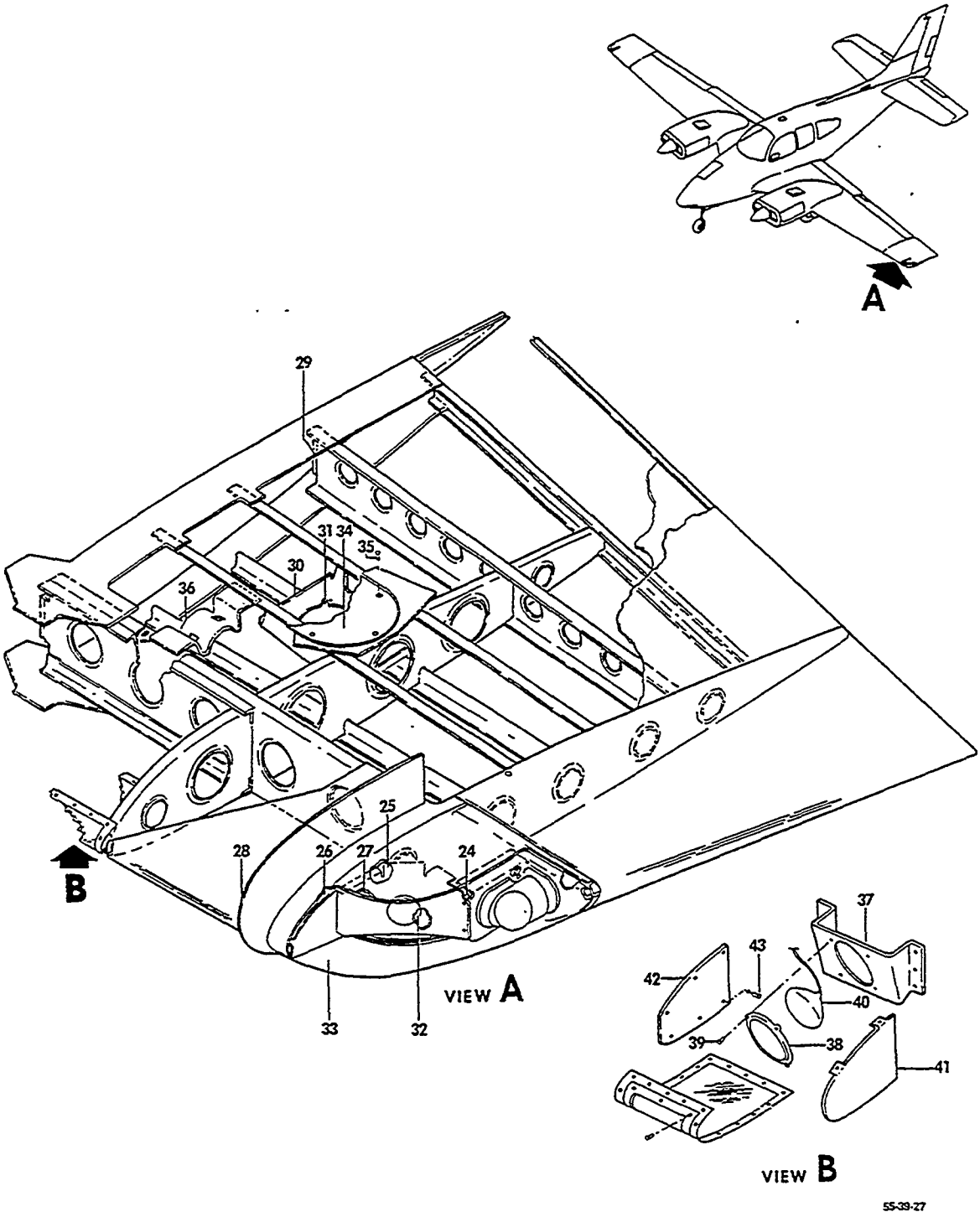

FIGURE 20-23.WING TIP,EXTENDED
/SHEET 2 OF 3 SHEETS/

ATA CODE & INDEX NO.	PART NO.	DESCRIPTION 1 2 3 4 5 6 7	UNITS PER ASSY	USABLE ON CODE
20-23 - 24	MS21073L08K	. . NUTPLATE.	2	1
- 25	000-170017-1	. . FORMER,LENS SUPPORT LH.	1	1
	000-170017-2	. . FORMER,LENS SUPPORT RH.	1	1
- 26	000-170020-1	. . RETAINER.	2	1
- 27	000-170021-1	. . RETAINER.	2	1
- 28	000-170000-23	. . GLARESHIELD,LH.	1	1
	000-170000-24	. . GLARESHIELD,RH.	1	1
- 29	000-170000-33	. . ANGLE	1	1
	000-170000-57	. SUPPORT ASSY/LH TIP ONLY/	1	1
- 30	000-170000-59	. . SUPPORT,FLUX DETECTOR LH.	1	1
- 31	MS21070L06K	. . NUTPLATE.	5	1
	000-170000-37	. HARNESS,NAVIGATION LIGHT LH/RED/.	1	1
	000-170000-38	. HARNESS,NAVIGATION LIGHT RH/GREEN/.	1	1
		/ATTACHING PARTS/		
	MS24693S5	. SCREW	2	
	MS35206-216	. SCREW	1	
		——*——		
	1-480350-0	. . HOUSING,PIN	1	1
	60618-1	. . PIN	1	1
	32446	. . DISCONNECT.	2	1
	31890	. . TERMINAL.	4	1
	A1815A-R7512	. . LAMP ASSY,NAVIGATION LH	1	1
	A1815A-G7512	. . LAMP ASSY,NAVIGATION RH	1	1
- 32	XS48175	. BUTTON,PLUG	1	1
- 33	000-170000-53	. COVER,NAVIGATION LIGHT LENS LH.	1	1
	000-170000-54	. COVER,NAVIGATION LIGHT LENS RH.	1	1
		/ATTACHING PARTS/		
	AN525-832R7	. SCREW	2	
	AN960PD8L	. WASHER.	2	
		——*——		
- 34	000-110085-3	. COVER,ACCESS.	1	1
		/ATTACHING PARTS/		
- 35	MS24693B850	. SCREW	6	
	MS21050L08	. NUTPLATE.	6	
		——*——		
- 36	000-170029-1	. BRACKET,FUEL VENT	1	1
	000-170000-35	. HARNESS,LANDING LIGHT	1	1
- 37	000-170025-1	. BRACKET,LANDING LIGHT LH.	1	1
	000-170025-2	. BRACKET,LANDING LIGHT RH.	1	1
- 38	000-170026-1	. RING,LAMP RETAINER.	1	1
		/ATTACHING PARTS/		
- 39	MS27039-0806	. SCREW	4	
	AN960D8L	. WASHER.	4	
	130290-3	. CLIPNUT	4	
		——*——		
- 40	4596	. LAMP,LANDING LIGHT.	1	1
- 41	000-170027-1	. RIB,CLOSURE LH.	1	1
	000-170027-2	. RIB,CLOSURE RH.	1	1
- 42	000-170000-39	REFLECTOR,LANDING LIGHT	1	1
		/ATTACHING PARTS/		
- 43	AN504-6R4	SCREW	6	
		——*——		

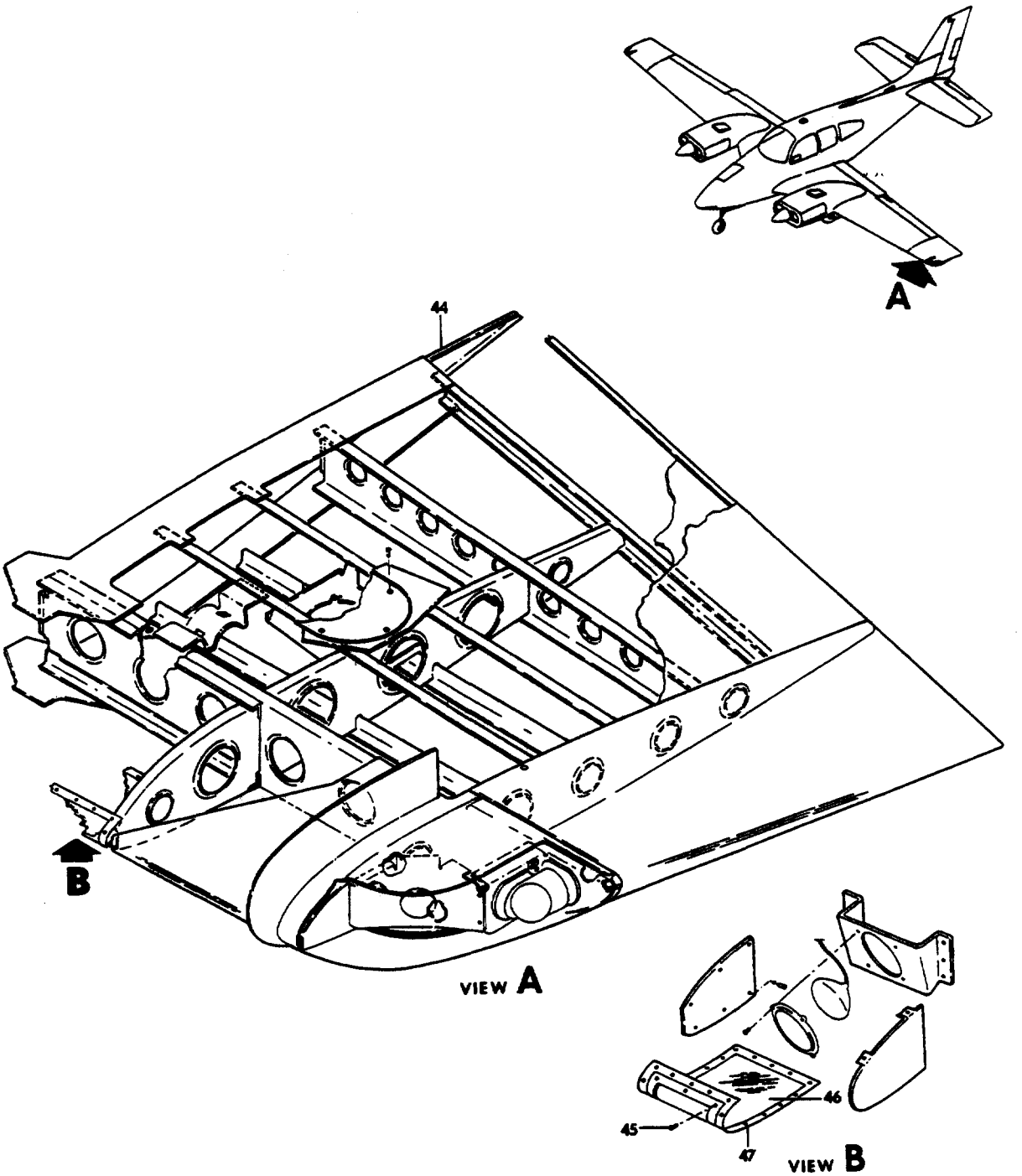

FIGURE 20-23.WING TIP,EXTENDED
/SHEET 3 OF 3 SHEETS/

ATA CODE & INDEX NO.	PART NO.	DESCRIPTION 1 2 3 4 5 6 7	UNITS PER ASSY	USABLE ON CODE
20-23 - 44	95-170000-63	COVER ASSY,TRAILING EDGE LH/STA 191.00/	1	1
	95-170000-64	COVER ASSY,TRAILING EDGE RH/STA 191.00/	1	1
	000-170032-1	LENS ASSY,LANDING LIGHT LH.	1	1
	000-170032-2	LENS ASSY,LANDING LIGHT RH.	1	1
		/ATTACHING PARTS/		
	AN509-8R8	SCREW	16	
	MS21050L08K	NUTPLATE.	13	
	MS21053L08K	NUTPLATE.	3	
		----*----		
- 45	MS24693S1	. SCREW	10	1
	AN960D4	. WASHER.	10	1
	MS21044N04	. NUT	10	1
- 46	000-170028-1	. LENS,LANDING LIGHT LH	1	1
	000-170028-2	. LENS,LANDING LIGHT RH	1	1
- 47	000-170024-1	. RETAINER,LENS LH.	1	1
	000-170024-2	. RETAINER,LENS RH.	1	1

CODES OF EFFECTIVITY

1 TC-1601 THRU TC-1607

"END"

57-30-01
WING SKINS

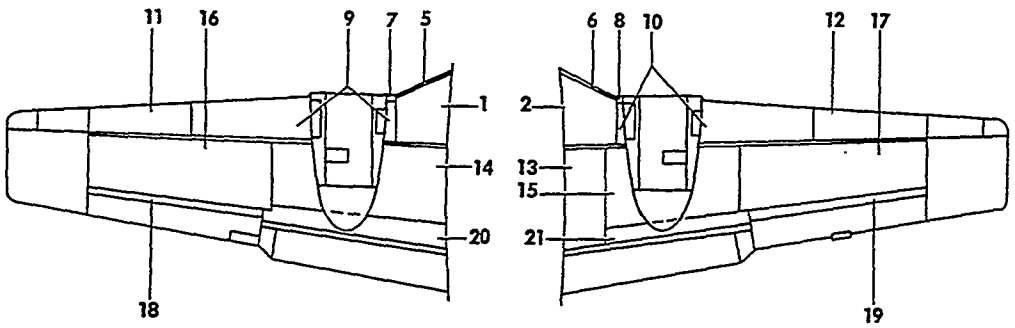

LEFT WING (UPPER)

RIGHT WING (UPPER)

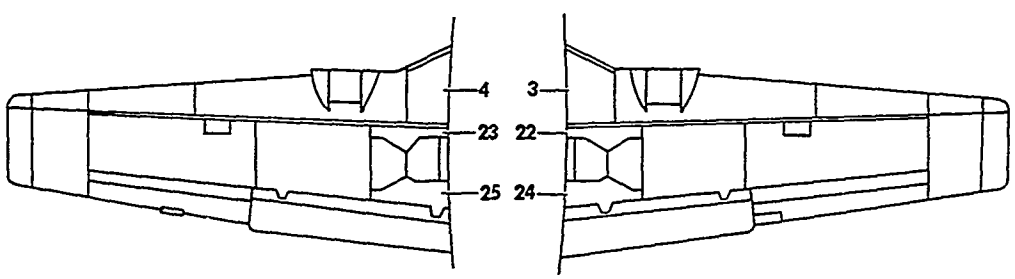

RIGHT WING (LOWER)

LEFT WING (LOWER)

55-12-17

FIGURE 30-01.WING SKINS
/SHEET 1 OF 3 SHEETS/

ATA CODE & INDEX NO.	PART NO.	DESCRIPTION 1 2 3 4 5 6 7	UNITS PER ASSY	USABLE ON CODE
30-01 - 1	95-110015-165	SKIN,LEADING EDGE TOP INBD LH	1	1
	96-110007-43	SKIN,LEADING EDGE TOP INBD LH	1	2
- 2	95-110015-166	SKIN,LEADING EDGE TOP INBD RH	1	1
	96-110007-44	SKIN,LEADING EDGE TOP INBD RH	1	2
- 3	95-110015-171	SKIN,LEADING EDGE LOWER INBD LH	1	1
	96-110007-45	SKIN,LEADING EDGE LOWER INBD LH	1	2
- 4	95-110015-172	SKIN,LEADING EDGE LOWER INBD RH	1	1
	96-110007-46	SKIN,LEADING EDGE LOWER RH.	1	2
- 5	95-110015-101	SKIN,LEADING EDGE INBD LH	1	1
	96-110007-41	SKIN,LEADING EDGE INBD LH	1	2
- 6	95-110015-102	SKIN,LEADING EDGE INBD RH	1	1
	96-110007-42	SKIN,LEADING EDGE INBD RH	1	2
- 7	95-110015-107	SKIN,LEADING EDGE INBD LH	1	1
	96-110007-39	SKIN,LEADING EDGE INBD LH	1	2
- 8	95-110015-108	SKIN,LEADING EDGE INBD RH	1	1
	96-110007-40	SKIN,LEADING EDGE INBD RH	1	2
- 9	95-110015-177	SKIN,LEADING EDGE TOP LH/STA 47 TO STA 73/.	1	3
	95-110015-179	SKIN,LEADING EDGE LOWER LH/STA 47 TO STA 73/.	1	3
	35-115431-99	SKIN,LEADING EDGE LH/STA 47 TO STA 122/	1	4
	96-110007-63	SKIN,LEADING EDGE LH/STA 47 TO STA 122/	1	5
- 10	95-110015-178	SKIN,LEADING EDGE TOP RH/STA 47 TO STA 73/.	1	3
	95-110015-180	SKIN,LEADING EDGE LOWER RH/STA 47 TO STA 73/.	1	3
	35-115431-100	SKIN,LEADING EDGE,RH/STA 47 TO STA 122/	1	4
	96-110007-64	SKIN,LEADING EDGE RH/STA 47 TO STA 122/	1	5
- 11	95-110015-87	SKIN,LEADING EDGE OUTBD LH.	1	3
	35-115431-107	SKIN,LEADING EDGE OUTBD LH.	1	6
- 12	35-115211-9	SKIN,LEADING EDGE OUTBD RH.	1	3
	35-115431-108	SKIN,LEADING EDGE OUTBD RH.	1	6
- 13	95-110014-260	SKIN,WALKWAY RH WING.	1	7
	95-110014-421	SKIN,WALKWAY RH WING.	1	8
	96-110019-5	SKIN,WALKWAY RH WING.	1	9
- 14	95-110014-169	SKIN,MAIN PANEL TOP INBD LH	1	10
	95-110014-477	SKIN,MAIN PANEL TOP INBD LH	1	11
- 15	95-110014-172	SKIN,MAIN PANEL TOP INBD RH	1	10
	95-110014-478	SKIN,MAIN PANEL TOP INBD RH	1	11
- 16	95-110014-161	SKIN,MAIN PANEL TOP OUTBD LH.	1	
- 17	95-110014-162	SKIN,MAIN PANEL TOP OUTBD RH.	1	
- 18	95-110014-199	SKIN,TRAILING EDGE OUTBD LH	1	
- 19	95-110014-200	SKIN,TRAILING EDGE OUTBD RH	1	
	95-110014-271	SKIN,TRAILING EDGE INBD LH.	1	7
	95-110014-695	SKIN ASSY,TRAILING EDGE INBD LH	1	12
	95-110014-765	SKIN ASSY,TRAILING EDGE INBD LH	1	13
- 20	95-110014-947	. SKIN,UPPER HALF LH/SUPERSEDES 95-110014-419/.	1	14
	95-110014-423	. SKIN,LH CONCAVE HALF.	1	14
	95-110014-274	SKIN,TRAILING EDGE INBD RH.	1	7
	95-110014-698	SKIN ASSY,TRAILING EDGE INBD RH	1	12
	95-110014-766	SKIN ASSY,TRAILING EDGE INBD RH	1	13
- 21	95-110014-420	. SKIN,RH UPPER HALF.	1	12
	95-110014-948	. SKIN,RH UPPER HALF.	1	13
	95-110014-424	. SKIN,RH CONCAVE HALF.	1	14
- 22	95-110014-203	SKIN,MAIN PANEL LOWER FWD INBD LH	1	10
	95-110014-537	SKIN,MAIN PANEL LOWER FWD INBD LH	1	11
- 23	95-110014-204	SKIN,MAIN PANEL LOWER FWD INBD RH	1	10
	95-110014-538	SKIN,MAIN PANEL LOWER FWD INBD RH	1	11
- 24	95-110014-207	SKIN,MAIN PANEL LOWER AFT INBD LH	1	
- 25	95-110014-208	SKIN,MAIN PANEL LOWER AFT INBD RH	1	

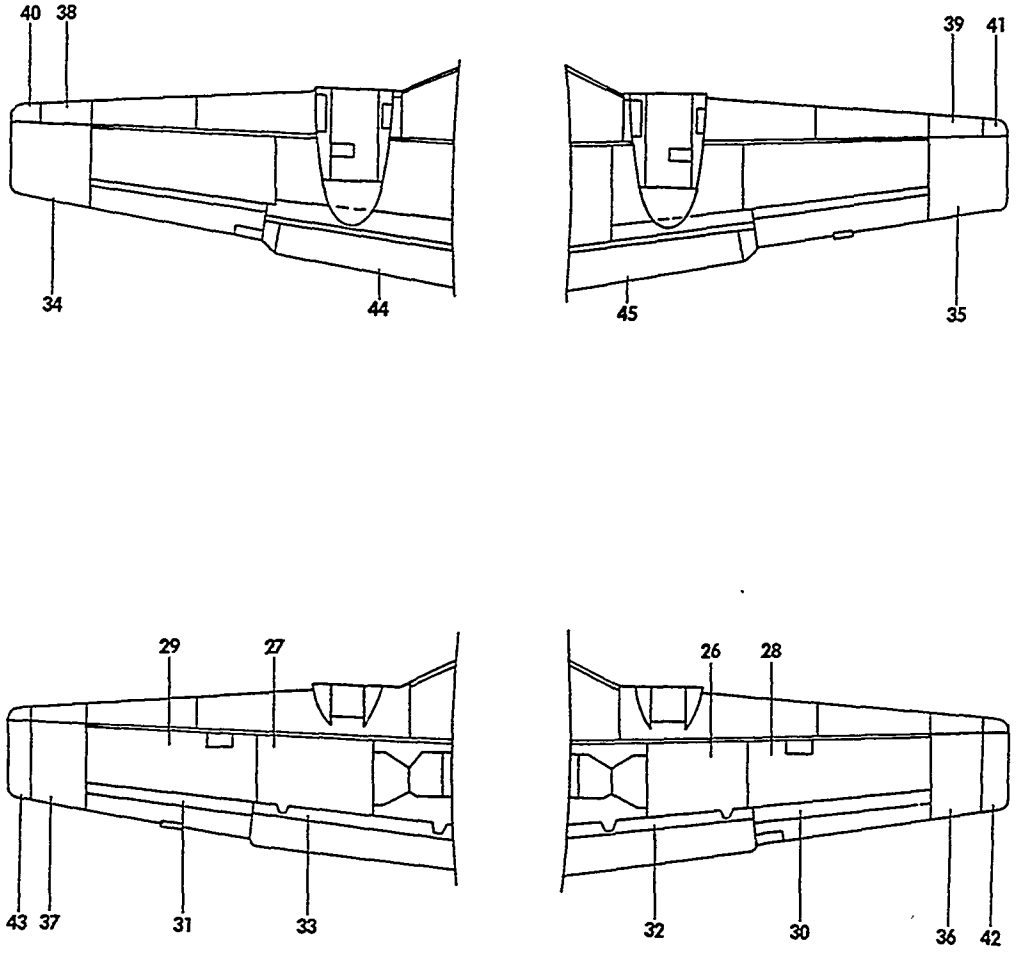

FIGURE 30-01.WING SKINS
/SHEET 2 OF 3 SHEETS/

ATA CODE & INDEX NO.	PART NO.	DESCRIPTION 1 2 3 4 5 6 7	UNITS PER ASSY	USABLE ON CODE
30-01 - 26	95-110014-205	SKIN,MAIN PANEL LOWER LH.	1	
- 27	95-110014-206	SKIN,MAIN PANEL LOWER RH.	1	
- 28	95-110014-209	SKIN,MAIN PANEL LOWER OUTBD LH.	1	
- 29	95-110014-210	SKIN,MAIN PANEL LOWER OUTBD RH.	1	
- 30	95-110014-211	SKIN,TRAILING EDGE LOWER OUTBD LH	1	
- 31	95-110014-212	SKIN,TRAILING EDGE LOWER OUTBD RH	1	
- 32	95-110014-323	SKIN,TRAILING EDGE LOWER INBD LH.	1	
- 33	95-110014-324	SKIN,TRAILING EDGE LOWER INBD RH.	1	
- 34	95-170000-3	SKIN,WING TIP TOP LH.	1	15
	58-170000-7	SKIN,WING TIP TOP LH/LESS STROBE LIGHT/	1	16
	95-170000-165	SKIN,WING TIP TOP LH/WITH STROBE LIGHT/	1	11
	000-170000-29	SKIN,WING TIP TOP LH/EXTENDED TIP/.	1	17
- 35	95-170000-4	SKIN,WING TIP TOP RH.	1	15
	58-170000-8	SKIN,WING TIP TOP RH/LESS STROBE LIGHT/	1	16
	95-170000-166	SKIN,WING TIP TOP RH/WITH STROBE LIGHT/	1	11
	000-170000-30	SKIN,WING TIP TOP RH/EXTENDED TIP/.	1	17
- 36	95-170000-5	SKIN,WING TIP LOWER LH.	1	15
	58-170000-5	SKIN,WING TIP LOWER LH/LESS STROBE LIGHT/ . . .	1	11
	60-360015-9	SKIN,WING TIP LOWER LH/WITH STROBE LIGHT/ . . .	1	16
	000-170000-31	SKIN,WING TIP LOWER LH/EXTENDED TIP/.	1	17
- 37	95-170000-6	SKIN,WING TIP LOWER RH.	1	15
	58-170000-6	SKIN,WING TIP LOWER RH/LESS STROBE LIGHT/ . . .	1	11
	60-360015-10	SKIN,WING TIP LOWER RH/WITH STROBE LIGHT/ . . .	1	16
	000-170000-32	SKIN,WING TIP LOWER RH/EXTENDED TIP/.	1	17
- 38	95-170000-7	SKIN,WING TIP LEADING EDGE LH	1	3
	96-170000-11	SKIN,WING TIP LEADING EDGE LH/LESS. . . . . STROBE LIGHT/	1	18
	60-360015-7	SKIN,WING TIP LEADING EDGE LH/WITH. . . . . STROBE LIGHT/	1	19
	000-170000-21	SKIN,WING TIP LEADING EDGE LH/EXTENDED TIP/ . .	1	17
- 39	95-170000-8	SKIN,WING TIP LEADING EDGE RH	1	3
	96-170000-12	SKIN,WING TIP LEADING EDGE RH/LESS. . . . . STROBE LIGHT/	1	18
	60-360015-8	SKIN,WING TIP LEADING EDGE RH/WITH. . . . . STROBE LIGHT/	1	19
	000-170000-22	SKIN,WING TIP LEADING EDGE RH/EXTENDED TIP/ . .	1	17
- 40	95-170000-9	SKIN,WING TIP TOP LEADING EDGE LH	1	20
	95-170000-83	SKIN,WING TIP TOP LH/LESS STROBE LIGHT/	1	11
- 41	95-170000-10	SKIN,WING TIP TOP LEADING EDGE RH	1	20
	95-170000-84	SKIN,WING TIP TOP RH/LESS STROBE LIGHT/	1	11
- 42	95-170000-11	SKIN,WING TIP LOWER OUTBD LH/LESS STROBE LIGHT/	1	15
	95-170000-85	SKIN,WING TIP LOWER OUTBD LH/LESS STROBE LIGHT/	1	11
	95-170000-127	SKIN,WING TIP LOWER OUTBD LH/WITH STROBE LIGHT/	1	19
	000-170000-55	SKIN,WING TIP OUTBD LH/EXTENDED TIP/.	1	17
- 43	95-170000-12	SKIN,WING TIP LOWER OUTBD RH/LESS STROBE LIGHT/	1	15
	95-170000-86	SKIN,WING TIP LOWER OUTBD RH/LESS STROBE LIGHT/	1	11
	95-170000-128	SKIN,WING TIP LOWER OUTBD RH/WITH STROBE LIGHT/	1	19
	000-170000-56	SKIN,WING TIP OUTBD RH/EXTENDED TIP/.	1	17
- 44	95-160000-29	SKIN,FLAP TOP LH.	1	21
	95-160000-39	SKIN,FLAP TOP LH.	1	22
	95-160000-75	SKIN,FLAP TOP LH.	1	23
	35-165051-8	SKIN,FLAP LH.	1	24
- 45	95-160000-30	SKIN,FLAP TOP RH.	1	21
	95-160000-40	SKIN,FLAP TOP RH.	1	22
	95-160000-58	SKIN,FLAP TOP RH.	1	23
	35-165051-9	SKIN,FLAP RH.	1	24
	95-160000-27	SKIN,FLAP NOSE LH	1	25
	95-160000-81	SKIN,FLAP NOSE LH	1	23
	95-160000-28	SKIN,FLAP NOSE RH	1	25
	95-160000-82	SKIN,FLAP NOSE RH	1	23

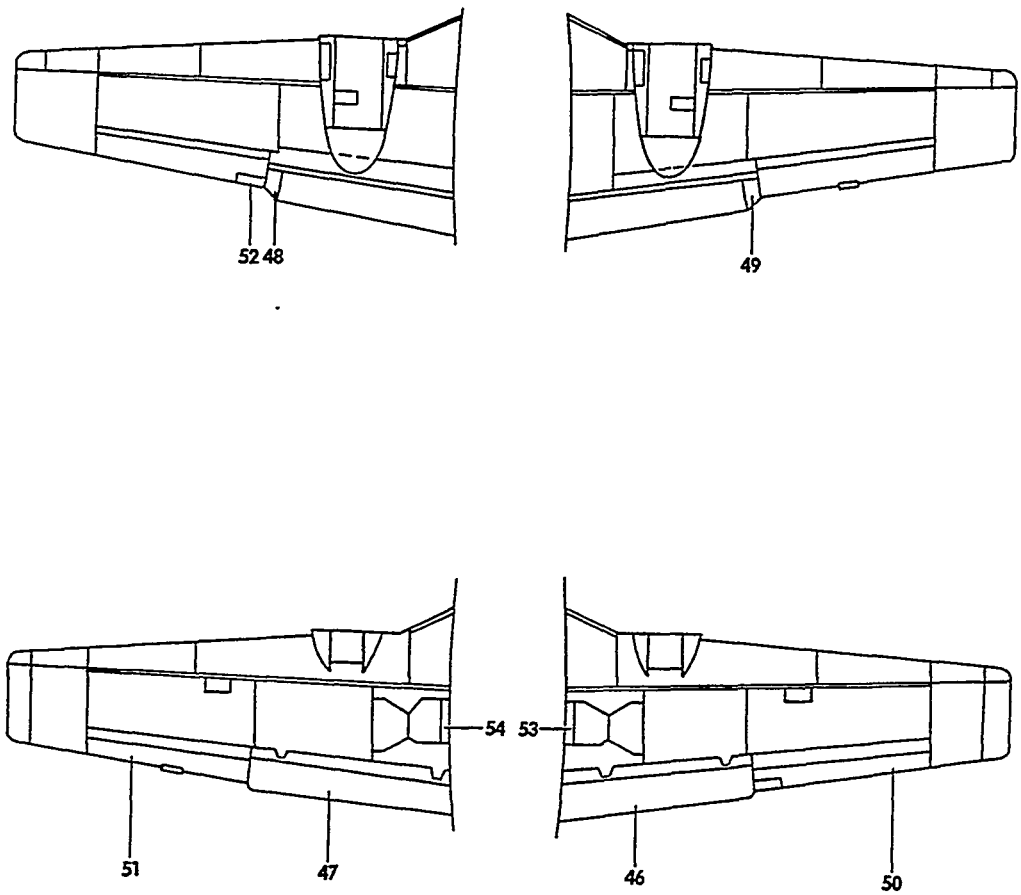

FIGURE 30-01.WING SKINS
/SHEET 3 OF 3 SHEETS/

ATA CODE & INDEX NO.	PART NO.	DESCRIPTION 1 2 3 4 5 6 7	UNITS PER ASSY	USABLE ON CODE
30-01 - 46	95-160000-19	SKIN,FLAP BOTTOM LH	1	21
	95-160000-41	SKIN,FLAP BOTTOM LH	1	22
	95-160000-77	SKIN,FLAP BOTTOM LH	1	23
	95-165051-8	SKIN,FLAP LH.	1	24
- 47	95-160000-20	SKIN,FLAP BOTTOM RH	1	21
	95-160000-42	SKIN,FLAP BOTTOM RH	1	22
	95-160000-60	SKIN,FLAP BOTTOM RH	1	23
	35-165051-9	SKIN,FLAP RH.	1	24
- 48	95-160000-33	SKIN,FLAP TIP LH.	1	26
- 49	95-160000-34	SKIN,FLAP TIP RH.	1	26
- 50	45-135031-1	SKIN,AILERON LH	1	27
	45-135031-93	SKIN,AILERON LH/SUPERSEDES 45-135031-75/.	1	28
- 51	35-135025-6	SKIN,AILERON RH	1	27
	33-130000-3	SKIN,AILERON RH	1	28
- 52	45-135032-1	SKIN,AILERON TAB LH ADJUSTABLE.	1	
- 53	35-115200-6	SKIN,LOWER INBD LH.	1	
- 54	35-115200-7	SKIN,LOWER INBD RH.	1	

CODES OF EFFECTIVITY

1 TC-1 THRU TC-1032
TE-1 THRU TE-310

2 TC-1033 THRU TC-1607
TE-311 THRU TE-942
EXCEPT TE-938

3 TC-1 THRU TC-399

4 TC-400 THRU TC-1032
TE-1 THRU TE-310

5 TC-1033 THRU TC-1607
TE-311 THRU TE-942
EXCEPT TE-938

6 TC-400 THRU TC-1607
TE-1 THRU TE-942
EXCEPT TE-938

7 TC-1 THRU TC-25

8 TC-26 THRU TC-1214
TE-1 THRU TE-683
EXCEPT TE-675

9 TC-1215 THRU TC-1607
TE-675 AND
TE-864 THRU TE-942
EXCEPT TE-938

10 TC-1 THRU TC-1607
TE-1 THRU TE-767

11 TE-768 THRU TE-942
EXCEPT TE-938

12 TC-26 THRU TC-1374
TE-1 THRU TE-831

13 TC-1375 THRU TC-1607
TE-832 THRU TE-942
EXCEPT TE-938

14 TC-26 THRU TC-1607
TE-1 THRU TE-942
EXCEPT TE-938

15 TC-1 THRU TC-1350
TE-1 THRU TE-767

16 TC-1299 THRU TC-1600
TE-768 THRU TE-942
EXCEPT TE-938

17 TC-1601 THRU TC-1607

18 TC-400 THRU TC-1350
TE-1 THRU TE-942
EXCEPT TE-938

19 TC-1351 THRU TC-1600
TE-768 THRU TE-942
EXCEPT TE-938

20 TC-1 THRU TC-1600
TE-1 THRU TE-767

21 TC-1 THRU TC-120

22 TC-121 THRU TC-1056
TE-1 THRU TE-395

23 TC-1057 THRU TC-1409
TE-396 THRU TE-851

24 TC-1410 THRU TC-1607
TE-852 THRU TE-942
EXCEPT TE-938

25 TC-1 THRU TC-1056
TE-1 THRU TE-395

26 TC-1 THRU TC-1409
TE-1 THRU TE-851

27 TC-1 THRU TC-65

28 TC-66 THRU TC-1607
TE-1 THRU TE-942
EXCEPT TE-938

"END"

57-40-01
WING INSTALLATION

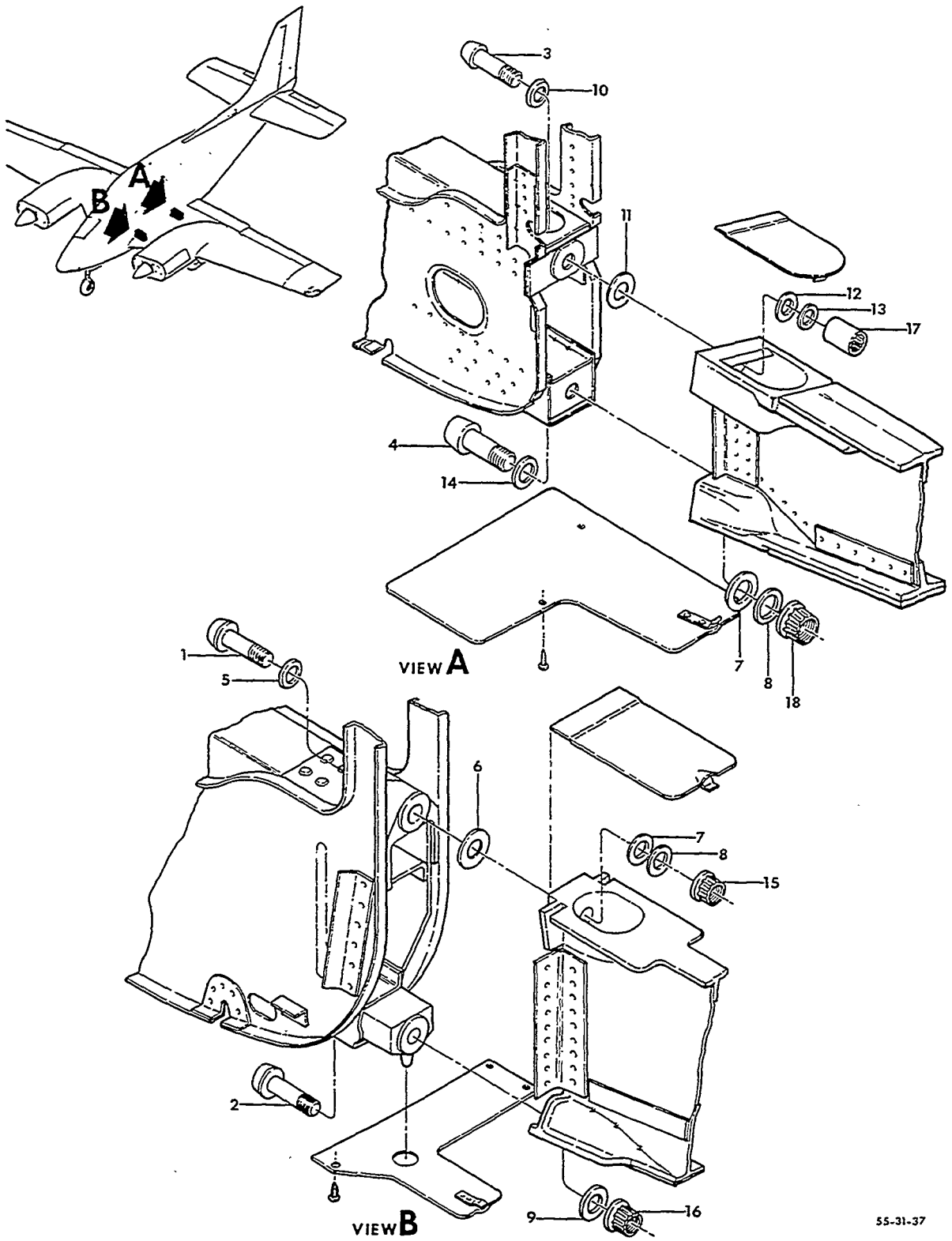

FIGURE 40-01. WING INSTALLATION
/SHEET 1 OF 2 SHEETS/

SUB-SECT UNIT & ITEM NO.		PART NO.	DESCRIPTION 1 2 3 4 5 6 7	UNITS PER ASSY	USABLE ON CODE
40-01		95-100000-1	WING INSTALLATION,LH.	NP	
		95-100000-2	WING INSTALLATION,RH.	NP	
	R	96-110005-601	. WING ASSY LH/COMPLETE/SEE CHAPTER 57-10-01/ .	1	1
		96-110005-609	. WING ASSY,LH/COMPLETE/SEE CHAPTER 57-10-01/ .	1	2
		96-110005-621	. WING ASSY,LH/COMPLETE/SEE CHAPTER 57-10-01/ .	1	3
		96-110005-602	. WING ASSY,RH/COMPLETE/SEE CHAPTER 57-10-01/ .	1	1
		96-110005-610	. WING ASSY,RH/COMPLETE/SEE CHAPTER 57-10-01/ .	1	2
		96-110005-622	. WING ASSY,RH/COMPLETE/SEE CHAPTER 57-10-01/ .	1	3
			/ATTACHING PARTS/		
- 1	R	NAS152-37/M/	. BOLT,UPPER FWD.	1	
	R	131790-1	. BOLT,UPPER FWD/ALTERNATE FOR NAS152-37/M/ . .	1	
- 2	R	MS20014-26/M/	. BOLT,LOWER FWD/SUPERSEDES NAS495-14-26/ . . .	1	4
	R	131790-3	. BOLT,LOWER FWD.	1	5
- 3	R	NAS150-35/M/	. BOLT,UPPER AFT.	1	
- 4	R	MS21250-12024/M/	. BOLT,LOWER AFT/SUPERSEDES NAS152-40/M/. . . .	1	
- 5	R	95-110021	. WASHER,UPPER FWD.	1	
- 6	R	105090A032-12K	. WASHER,UPPER FWD/BETWEEN FITTINGS/.	1	
- 7	R	95-110025-1	. WASHER,UPPER FWD & LOWER AFT.	2	
- 8	R	MS20002-12	. WASHER,UPPER FWD & LOWER AFT.	AR	
- 9	R	50-105011	. WASHER,LOWER FWD.	1	
- 10	R	35-105111-3	. WASHER,UPPER AFT.	1	
- 11	R	105090A032-10J	. WASHER,UPPER AFT/BETWEEN FITTINGS/.	1	
- 12	R	95-110025-3	. WASHER,UPPER AFT.	1	
- 13	R	MS20002-10	. WASHER,UPPER AFT/SUPERSEDES NAS143-10/. . . .	AR	
- 14	R	95-110021-1	. WASHER,LOWER AFT.	1	
- 15	R	12B126	. NUT,UPPER FWD	1	
- 16	R	EB144	. NUT,LOWER FWD	1	
		ZEB1845-144	. NUT,LOWER FWD/ALTERNATE FOR EB144/.	1	
- 17	R	12B108	. NUT,UPPER AFT	1	
- 18	R	LH6422T126	. NUT,LOWER AFT	1	
			—*—		
	R	115092-11000	. EXTRUSION,UPPER WING SEAL/110 IN.LONG/. . . .	1	
	R	111722	. EXTRUSION,LOWER WING SEAL/34 1/4 IN.LONG/ . .	1	
	R	45-135035	. HINGE ASSY,AILERON INBD LH.	1	
		35-135025-36	. HINGE ASSY,AILERON INBD RH.	1	
	R	45-135036	. HINGE ASSY,AILERON OUTBD LH	1	
		35-135025-32	. HINGE ASSY,AILERON OUTBD RH	1	

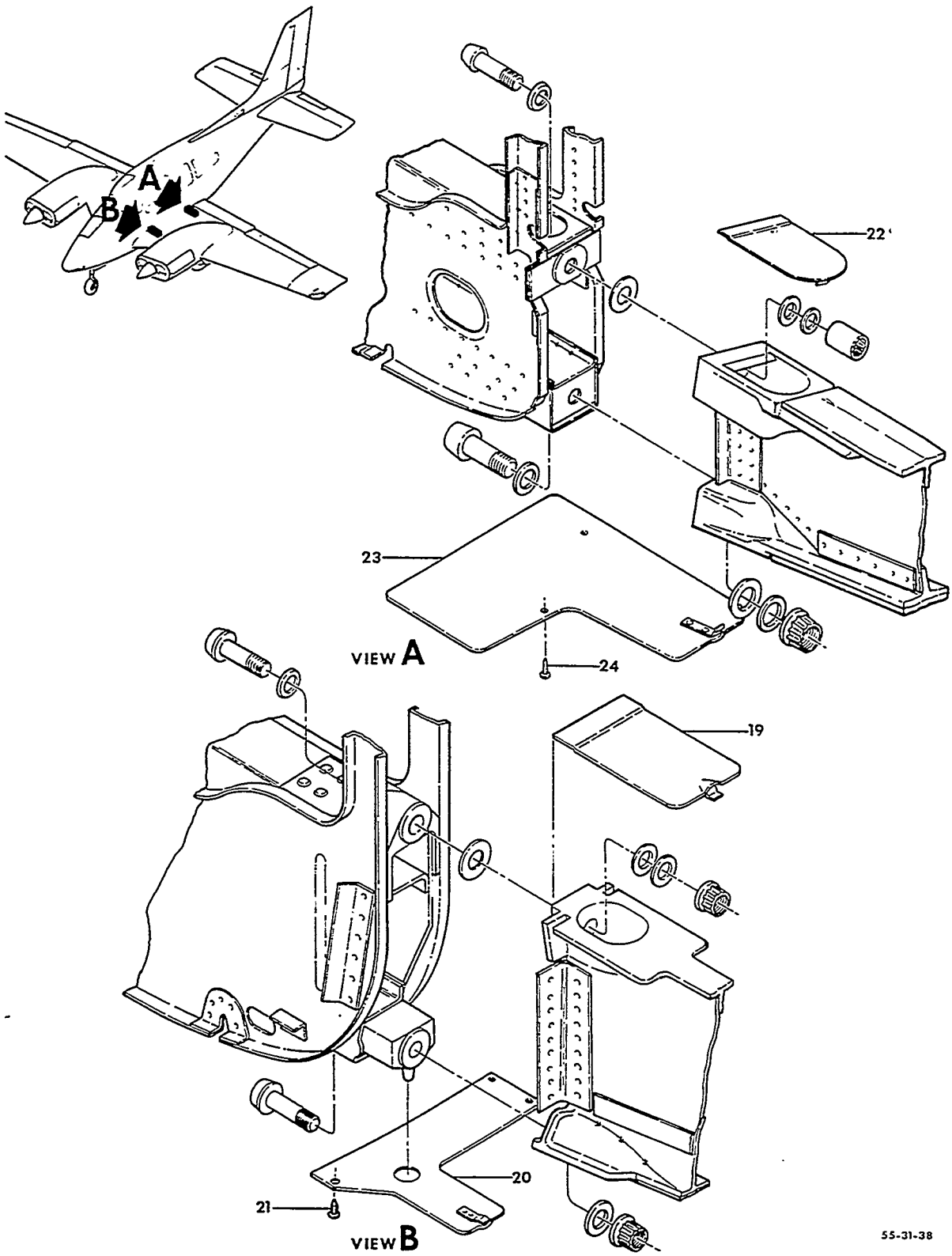

FIGURE 40-01. WING INSTALLATION
/SHEET 2 OF 2 SHEETS/

SUB-SECT UNIT & ITEM NO.		PART NO.	DESCRIPTION 1 2 3 4 5 6 7	UNITS PER ASSY	USABLE ON CODE
40-01 - 19	R	35-105005-10	. DOOR ASSY,UPPER FWD LH.	1	
		35-105005-11	. DOOR ASSY,UPPER FWD RH.	1	
		35-105005-4	. . CLIP.	1	
		35-105005-6	. . CLIP.	1	
		35-105005-18	. . DOOR,UPPER FWD LH	1	
		35-105005-19	. . DOOR,UPPER FWD RH	1	
- 20	R	000-100100-1	. COVER ASSY,JACK PAD LH.	1	
	R	000-100100-2	. COVER ASSY,JACK PAD RH.	1	
			/ATTACHING PARTS/		
- 21	R	AN530-8R8	. SCREW	4	
	R	NAS394-17-1	. NUT	1	
	R	NAS395-17-1	. NUT	2	
			——+——		
	R	000-100100-5	. . CLIP.	1	
	R	000-100100-4	. . SEAL.	1	
	R	000-100100-3	. . COVER,LH.	1	
	R	000-100100-4	. . COVER,RH.	1	
- 22	R	35-105005-12	. DOOR ASSY,UPPER AFT LH.	1	
		35-105005-13	. DOOR ASSY,UPPER AFT RH.	1	
		35-105005-4	. . CLIP.	1	
		35-105005-6	. . CLIP.	1	
		35-105005-20	. . DOOR,UPPER AFT LH	1	
		35-105005-21	. . DOOR,UPPER AFT RH	1	
- 23	R	35-105110	. DOOR ASSY,LOWER AFT LH.	1	
		35-105110-1	. DOOR ASSY,LOWER AFT RH.	1	
			/ATTACHING PARTS/		
- 24	R	PK56Z8-6	. SCREW	3	
			——+——		
		45-105117	. . CLIP.	1	
		45-115053	. . CLIP ASSY	1	
		35-105110-4	. . STRIP,LH.	1	
		35-105110-5	. . STRIP,RH.	1	
		35-105110-2	. . DOOR,LOWER AFT LH	1	
		35-105110-3	. . DOOR,LOWER AFT RH	1	
	R	58-100023-5	. DECAL,WING ATTACH WASHERS NOTICE/WHITE/	1	
	R	58-100023-7	. DECAL,WING ATTACH WASHERS NOTICE/BLACK/	1	
	R	58-100026-5	DECAL,WING BOLT LUBRICATION NOTICE/WHITE/	1	
	R	58-100026-7	DECAL,WING BOLT LUBRICATION NOTICE/BLACK/	1	

CODES OF EFFECTIVITY

1 TC-1 THRU TC-399
2 TC-400 THRU TC-1607
3 TE-1 THRU TE-942 EXCEPT TE-938
4 TC-1 THRU TC-1442 TE-1 THRU TE-862
5 TC-1443 THRU TC-1607 TE-863 THRU TE-942 EXCEPT TE-938

"END"

57-50-01
FLAP ASSEMBLY

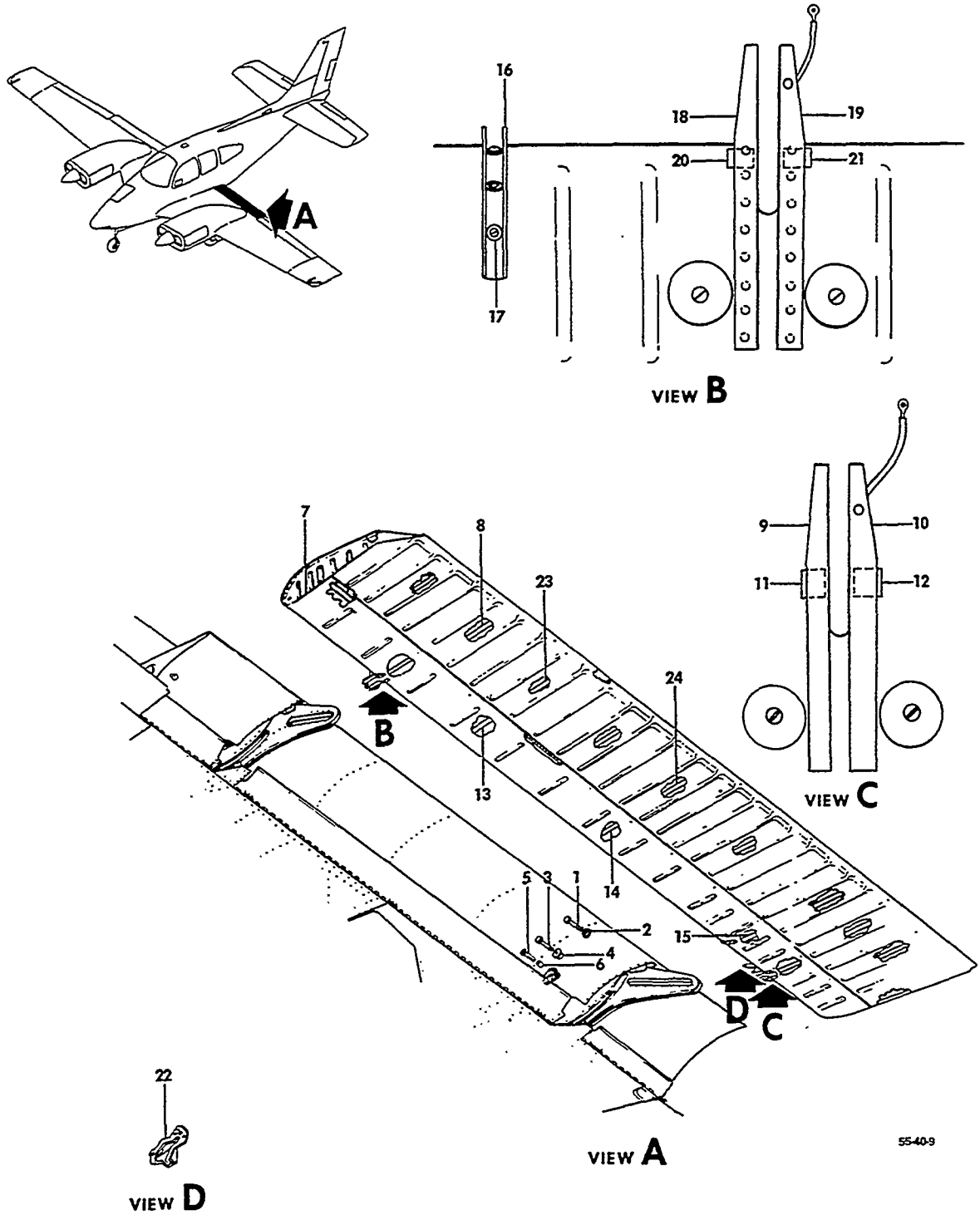

FIGURE 50-01.FLAP ASSEMBLY
/SHEET 1 OF 3 SHEETS/

ATA CODE & INDEX NO.	PART NO.	DESCRIPTION 1 2 3 4 5 6 7	UNITS PER ASSY	USABLE ON CODE
50-01	95-160000-601	FLAP ASSY,LH.	1	1
	95-160000-603	FLAP ASSY,LH.	1	2
	95-160000-607	FLAP ASSY,LH.	1	3
	35-165050-607	FLAP ASSY,LH.	1	4
	95-160000-602	FLAP ASSY,RH.	1	1
	95-160000-604	FLAP ASSY,RH.	1	2
	95-160000-608	FLAP ASSY,RH.	1	3
	35-165050-606	FLAP ASSY,RH.	1	4
		/ATTACHING PARTS/		
- 1	AN3-12A/M/	BOLT,FLAP HINGE	2	
- 2	BC22062	ROLLER,FLAP AFT	2	5
	99-160011	ROLLER,FLAP AFT	2	6
- 3	AN3-11A/M/	BOLT,FLAP HINGE	2	
- 4	35-165004	ROLLER,FLAP FWD	2	
	50-105000-3	WASHER,TEFLON/FLAP HINGE/	2	6
	AN960-10	WASHER.	4	
	MS20365-1032	NUT	4	
- 5	AN4-10A/M/	BOLT,FLAP ACTUATOR.	1	
- 6	100801S5-0500	BUSHING,FLAP ACTUATOR	1	
	AN960-416	WASHER.	1	
	MS20365-428	NUT	1	
		——+——		
- 7	35-165050-76	. RIB,LH.	1	
	35-165050-77	. RIB,RH.	1	
- 8	95-160000-3	. RIB,LH.	1	5
	95-160000-71	. RIB,LH.	1	3
	95-160000-4	. RIB,RH.	1	5
	95-160000-72	. RIB,RH.	1	3
- 9	35-165050-34	. BRACKET,LH HALF OUTBD/FLAP TRACK/	1	
- 10	35-165050-35	. BRACKET,RH HALF OUTBD/FLAP TRACK/	1	
- 11	35-165050-64	. ANGLE,LH HALF OUTBD BRACKET/FLAP TRACK/	1	
- 12	35-165050-65	. ANGLE,RH HALF OUTBD BRACKET/FLAP TRACK/	1	
- 13	50-160012-1	. RIB,LH.	1	
	50-160012-2	. RIB,RH.	1	
- 14	50-160013-1	. RIB,LH.	1	
	50-160013-2	. RIB,RH.	1	
- 15	35-165050-84	. RIB/RH & LH/.	1	
- 16	50-160003-6	. BRACKET,FLAP ACTUATOR/SPARE REPLACEMENT FOR 35-165050-40/	1	
		/ATTACHING PARTS/		
- 17	MS35207-263	. SCREW	3	
	100951S063ZT	. WASHER.	3	
	NAS680A3	. NUTPLATE.	3	
		——+——		
- 18	35-165050-30	. BRACKET,LH HALF INBD/FLAP TRACK/.	1	
- 19	35-165050-31	. BRACKET,RH HALF INBD/FLAP TRACK/.	1	
- 20	35-165050-62	. ANGLE,LH HALF INBD BRACKET/FLAP TRACK/.	1	
- 21	35-165050-63	. ANGLE,RH HALF INBD BRACKET/FLAP TRACK/.	1	
- 22	45-361119-1	. CAM,FLAP LIMIT SWITCH	1	7
	95-160000-49	. CAM,FLAP LIMIT SWITCH/15 DEGREES/	1	8
- 23	95-160000-5	. RIB,LH.	1	9
	95-160000-6	. RIB,RH.	1	9
- 24	95-160000-9	. RIB,LH.	1	9
	95-160000-10	. RIB,RH.	1	9

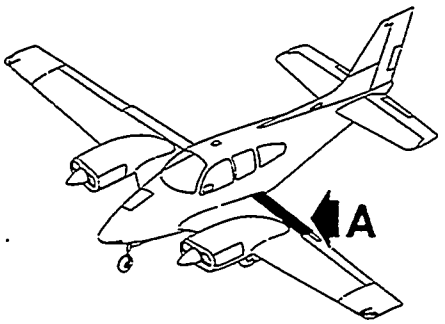

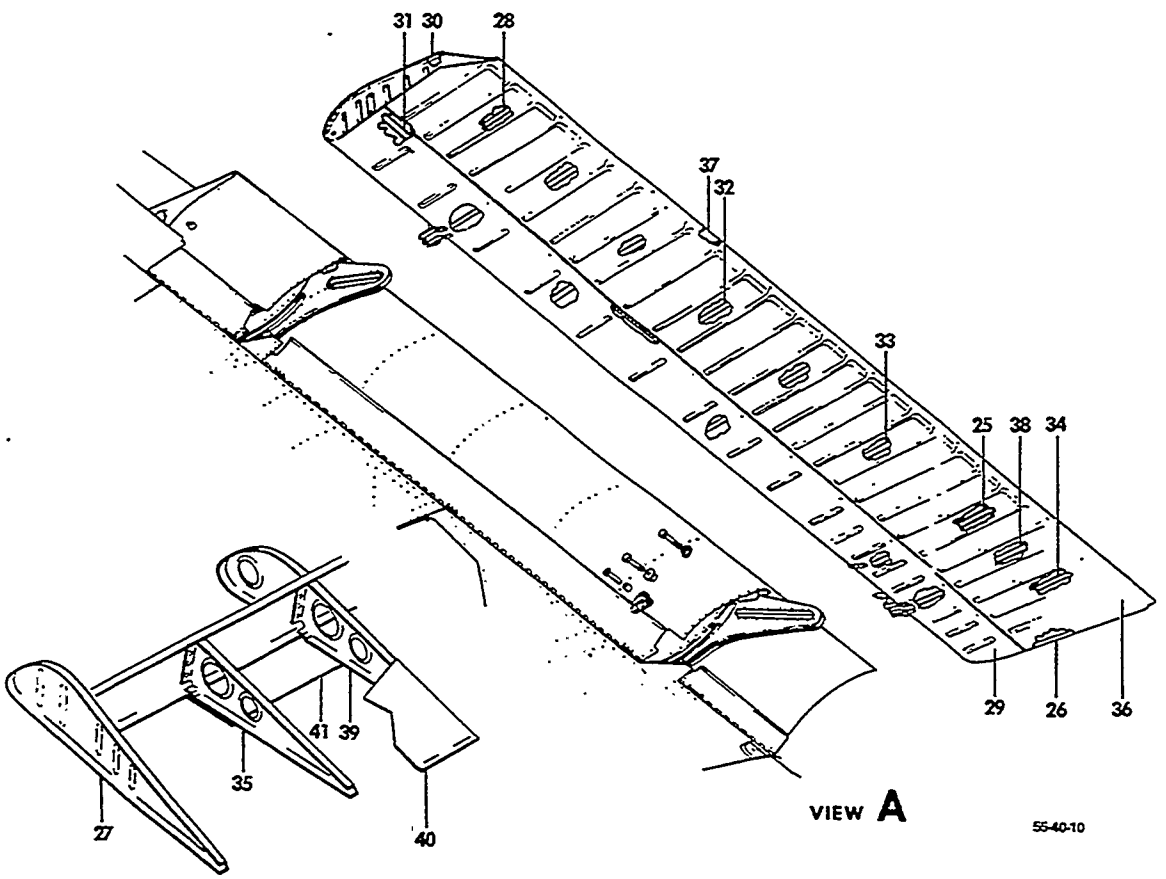

RIGHT HAND FLAP

FIGURE 50-01.FLAP ASSY
/SHEET 2 OF 3 SHEETS/

ATA CODE & INDEX NO.	PART NO.	DESCRIPTION 1 2 3 4 5 6 7	UNITS PER ASSY	USABLE ON CODE
50-01 - 25	95-160000-13	RIB,LH.	1	9
	95-160000-14	RIB,RH.	1	5
	95-160000-62	RIB,RH.	1	3
- 26	95-160000-17	RIB,LH.	1	9
	35-165050-74	RIB,LH.	1	4
- 27	95-160000-18	RIB,RH.	1	9
	35-165050-75	RIB,RH.	1	4
- 28	95-160000-25	RIB,LH.	1	9
	95-160000-26	RIB,RH.	1	9
- 29	95-160000-27	SKIN,LH NOSE.	1	5
	95-160000-81	SKIN,LH NOSE.	1	3
	95-160000-28	SKIN,RH NOSE.	1	5
	95-160000-82	SKIN,RH NOSE.	1	3
- 30	95-160000-33	SKIN,LH TIP	1	9
	95-160000-34	SKIN,RH TIP	1	9
- 31	95-160000-37	SPAR,LH	1	5
	95-160000-73	SPAR,LH	1	3
	35-165050-68	SPAR,LH	1	4
	95-160000-38	SPAR,RH	1	5
	95-160000-74	SPAR,RH	1	3
	35-165050-69	SPAR,RH	1	4
- 32	95-160000-7	RIB,LH.	1	1
	95-160000-8	RIB,RH.	1	1
- 33	95-160000-11	RIB,LH.	1	1
	95-160000-12	RIB,RH.	1	1
- 34	95-160000-15	RIB,LH.	1	1
	95-160000-32	RIB,LH.	1	2
	95-160000-65	RIB,LH.	1	3
- 35	95-160000-31	RIB,RH.	1	9
- 36	95-160000-19	SKIN,LH BOTTOM.	1	1
	95-160000-41	SKIN,LH BOTTOM.	1	2
	95-160000-77	SKIN,LH BOTTOM.	1	3
	95-160000-20	SKIN,RH BOTTOM.	1	1
	95-160000-42	SKIN,RH BOTTOM.	1	2
	95-160000-60	SKIN,RH BOTTOM.	1	3
- 37	95-160000-29	SKIN,LH TOP	1	1
	95-160000-39	SKIN,LH TOP	1	2
	95-160000-75	SKIN,LH TOP	1	3
	35-165051-8	SKIN,LH FLAP.	1	4
	95-160000-30	SKIN,RH TOP	1	1
	95-160000-40	SKIN,RH TOP	1	2
	95-160000-58	SKIN,RH TOP	1	3
	35-165051-9	SKIN,RH FLAP.	1	4
- 38	95-160000-63	RIB,LH.	1	3
- 39	95-160000-21	RIB,RH.	1	9
- 40	95-160000-35	DOUBLER,FLAP STEP/RH/	1	10
	95-160000-45	DOUBLER,FLAP STEP/RH/	1	11
	35-165050-73	CORRUGATION,RH FLAP STEP.	1	4
	35-165050-81	DOUBLER,RH FLAP STEP.	1	4
- 41	95-160000-47	DOUBLER,RH LOWER.	1	9

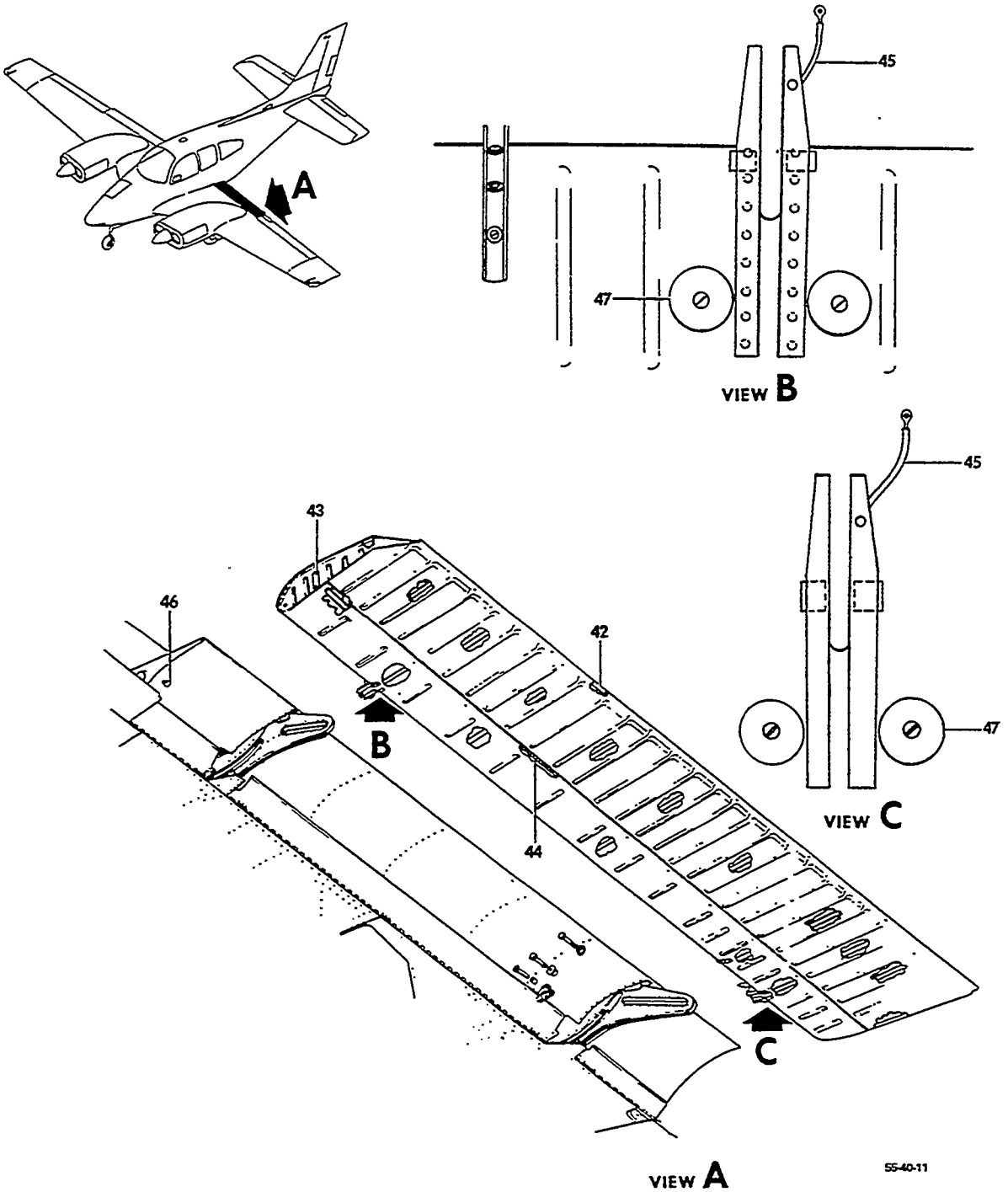

FIGURE 50-01.FLAP ASSEMBLY
/SHEET 3 OF 3 SHEETS/

SUB-SECT UNIT & ITEM NO.	PART NO.	DESCRIPTION 1 2 3 4 5 6 7	UNITS PER ASSY	USABLE ON CODE
50-01 - 42	35-165050-70	. SPACER,LH FLAP.	1	4
	35-165050-71	. SPACER,RH FLAP.	1	4
- 43	103637	. PLACARD	1	
		/ATTACHING PARTS/		
	49384	. FASTENER.	2	
		——*——		
- 44	95-160000-69	. STIFFENER	1	3
- 45 R	MS25083-1BB6	JUMPER,BONDING.	2	1
	MS25083-2BB6	JUMPER,BONDING.	2	12
	MS25083-2AA6	JUMPER,BONDING.	2	4
		/ATTACHING PARTS/		
	MS35206-229	SCREW	2	
	AN960-6	WASHER.	4	
	MS21042L06	NUT	2	
		——*——		
- 46	2194	BUMPER,FLAP/RUBBER/	1	
		/ATTACHING PARTS/		
	AN515-8R8	SCREW	1	
	105090CR032-3E	WASHER.	1	
	AN340-832	NUT,SELF LOCKING.	1	
	AN366F832	NUTPLATE.	1	
		——*——		
- 47	A6914-1024-1	PLATE,PATCH	4	

NOTE THE SHORT CHORD FLAP ASSEMBLIES MAY BE USED AS SPARES,IN PAIRS ONLY,FOR THE LONG CHORD FLAP ASSEMBLIES ON AIRPLANES IN SERVICE.

CODES OF EFFECTIVITY

1	TC-1 THRU TC-120	2	TC-121 THRU TC-1056 TE-1 THRU TE-395
3	TC-1057 THRU TC-1409 TE-396 THRU TE-851	4	TC-1410 THRU TC-1607 TE-852 THRU TE-942 EXCEPT TE-938
5	TC-1 THRU TC-1056 TE-1 THRU TE-395	6	TC-1057 THRU TC-1607 TE-396 THRU TE-942
7	TC-1 THRU TC-1056	8	TC-1057 THRU TC-1607 TE-1 THRU TE-942 EXCEPT TE-938
9	TC-1 THRU TC-1409 TE-1 THRU TE-851	10	TC-1 THRU TC-528
11	TC-529 THRU TC-1409 TE-1 THRU TE-851	12	TC-121 THRU TC-1409 TE-1 THRU TE-851

57-50-10
AILERON ASSEMBLY

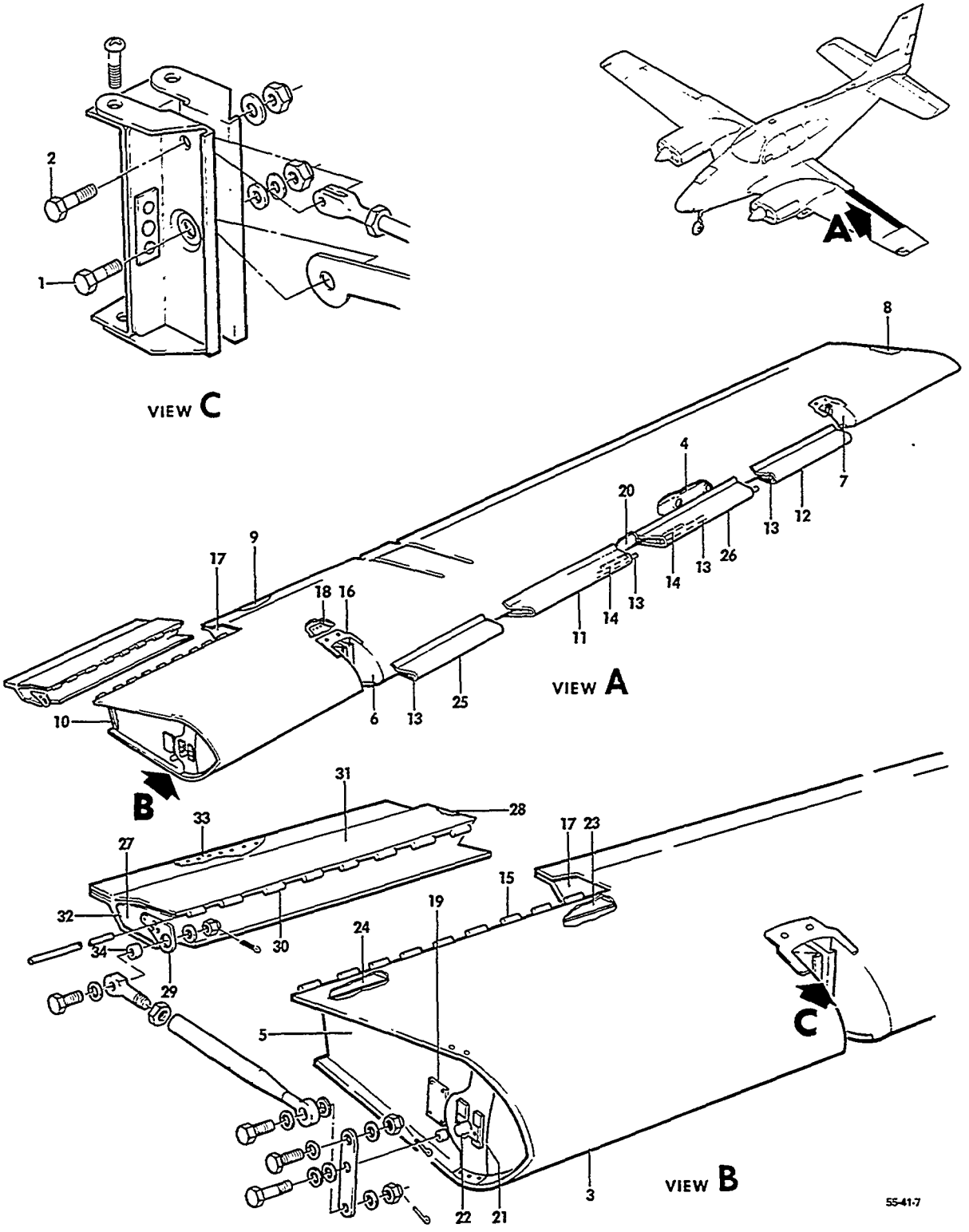

FIGURE 50-10.AILERON ASSEMBLY
/SHEET 1 OF 4 SHEETS/

SUB-SECT UNIT & ITEM NO.	PART NO.	DESCRIPTION 1 2 3 4 5 6 7	UNITS PER ASSY	USABLE ON CODE
50-10	45-135030-3	AILERON ASSY,LH/ORDER 45-135030-9/.	NP	1
	45-135030-9	AILERON ASSY,LH/COMPLETE/	1	2
	45-135030-5	AILERON ASSY,LH/LESS TAB/	1	
		/ATTACHING PARTS/		
- 1	AN3-7A/M/	BOLT.	2	
	AN960-10	WASHER.	2	
	MS20365-1032	NUT	2	
- 2	AN4-10A/M/	BOLT.	1	
	AN960-416	WASHER.	1	
	MS20365-428	NUT	1	
		——+——		
- 3	R 45-135031-1	. SKIN,LH	1	1
	45-135031-93	. SKIN,LH/SUPERSEDES 45-135031-75/.	1	2
- 4	45-135031-3	. SPAR,LH	1	1
	45-135031-77	. BEAM,LH	1	2
- 5	45-135031-53	. RIB,INBD LH	1	
- 6	45-135031-55	. RIB,INBD HINGE.	1	
- 7	45-135031-57	. RIB,OUTBD HINGE	1	
- 8	45-135031-59	. RIB,OUTBD LH.	1	
- 9	45-135031-13	. SPACER,LH	1	1
	45-135031-79	. SPACER,LH	1	2
- 10	45-135031-15	. CHANNEL,LH.	1	1
	45-135031-81	. CHANNEL,LH.	1	2
- 11	45-135031-61	. CLIP,LH	1	
- 12	45-135031-63	. CLIP,LH	1	
- 13	45-135031-21	. WEIGHT ASSY	6	
- 14	45-135031-23	. WEIGHT,LH	2	
- 15	45-135031-33	. HINGE/USE 45-135031-91 AS SPARE REPLACEMENT/.	1	3
	45-135031-91	. HINGE	1	4
- 16	45-135031-41	. DOUBLER	2	1
	45-135031-83	. DOUBLER	2	2
- 17	45-135031-85	. RIB,LH.	1	
- 18	45-135027	. GUSSET.	2	
	AN366F1032	. NUTPLATE.	8	
- 19	AN7510-1	. PLACARD	1	
- 20	33-130000-11	. DOUBLER	1	
- 21	45-135031-43	. BRACKET	1	
- 22	45-135031-45	. BUSHING	1	
- 23	45-135031-65	. STIFFENER	1	
- 24	45-135031-67	. STIFFENER	1	
- 25	45-135031-69	. CLIP.	1	
- 26	45-135031-71	. CLIP.	1	
	45-135032	. TAB ASSY,LH AILERON	1	
		/ATTACHING PARTS/		
	45-135030-7	. PIN,AILERON TAB HINGE LH.	1	
		——+——		
- 27	45-135032-17	. . RIB	1	
- 28	45-135032-19	. . RIB	1	
- 29	45-135032-25	. . PLATE/SPARES REPLACEMENT FOR.	1	
		45-135032-9 AND -21 PLATE/		
- 30	45-135032-23	. . HINGE,TRIM TAB.	1	
- 31	45-135032-1	. . SKIN,TRIM TAB	1	
- 32	45-135032-3	. . SKIN,TRIM TAB	1	
- 33	45-135032-11	. . STRIP	1	
- 34	105740X-ZG0109	. . BUSHING/USED WITH 45-135032-9 PLATE ONLY/ .	1	

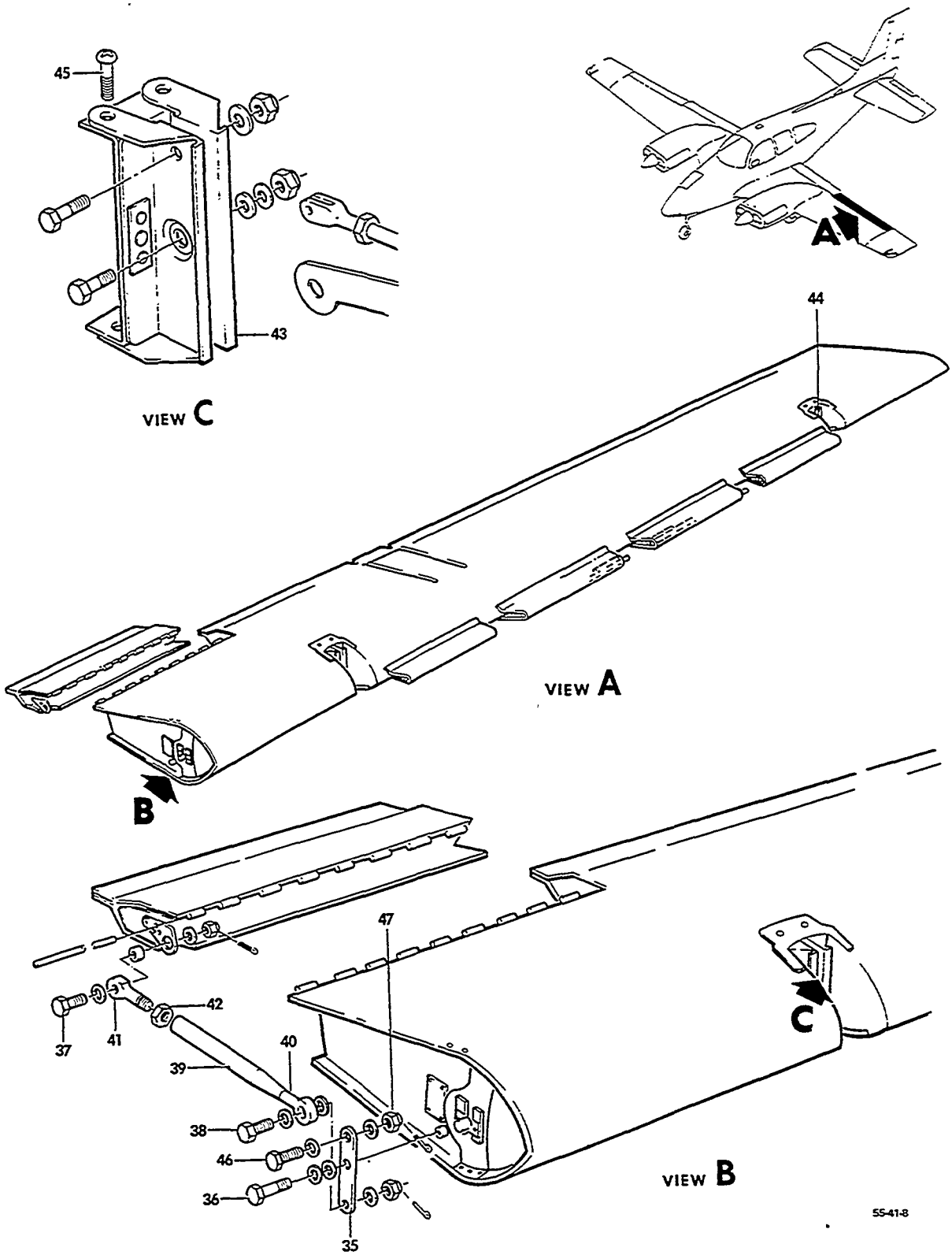

FIGURE 50-10.AILERON ASSEMBLY
/SHEET 2 OF 4 SHEETS/

ATA CODE & INDEX NO.	PART NO.	DESCRIPTION 1 2 3 4 5 6 7	UNITS PER ASSY	USABLE ON CODE
50-10 - 35	45-135039-1	. ARM	1	
		/ATTACHING PARTS/		
- 36	AN3-10A/M/	. BOLT.	1	
	AN960D10L	. WASHER.	1	
	AN960-416	. WASHER.	1	
	AN960-416L	. WASHER.	1	
	22A21-22-02	. NUTPLATE.	1	
		----*----		
	96-520012-1	. TUBE ASSY,AILERON TAB ADJUSTABLE LH/FOR SPARE REPLACEMENT USE 96-520013-5 TUBE ASSY/	1	
		/ATTACHING PARTS/		
- 37	AN173-5/M/	. BOLT.	1	
- 38	NAS1103-4D	. BOLT.	1	
	AN960D10L	. WASHER.	2	
	AN310-3	. NUT	2	
	MS24665-132	. PIN,COTTER/SUPERSEDES AN380-2-2/.	2	
		----*----		
- 39	96-520012-3	. . TUBE,AILERON TAB LH/USED WITH 96-520012-1/.	1	
	96-520013-13	. . TUBE,AILERON TAB LH/USED WITH 96-520013-5/.	1	
- 40	96-520011	. . END,ROD	1	
- 41	96-526012	. . END,ROD	1	
- 42	AN316-4R	. . NUT	1	
- 43	45-135035	HINGE ASSY,AILERON INBD LH/SEE CHAPTER.	1	
		57-40-01/		
- 44	45-135036	HINGE ASSY,AILERON OUTBD LH/SEE CHAPTER	1	
		57-40-01/		
		/ATTACHING PARTS/		
- 45	NAS221-9	SCREW	8	
	AN960-10L	WASHER.	8	
	112105	WASHER.	8	
		----*----		
- 46	NAS1103-4D	. BOLT.	1	
	AN960D10L	. WASHER.	1	
- 47	AN320-3	. NUT	1	
	MS24665-132	. PIN,COTTER.	1	

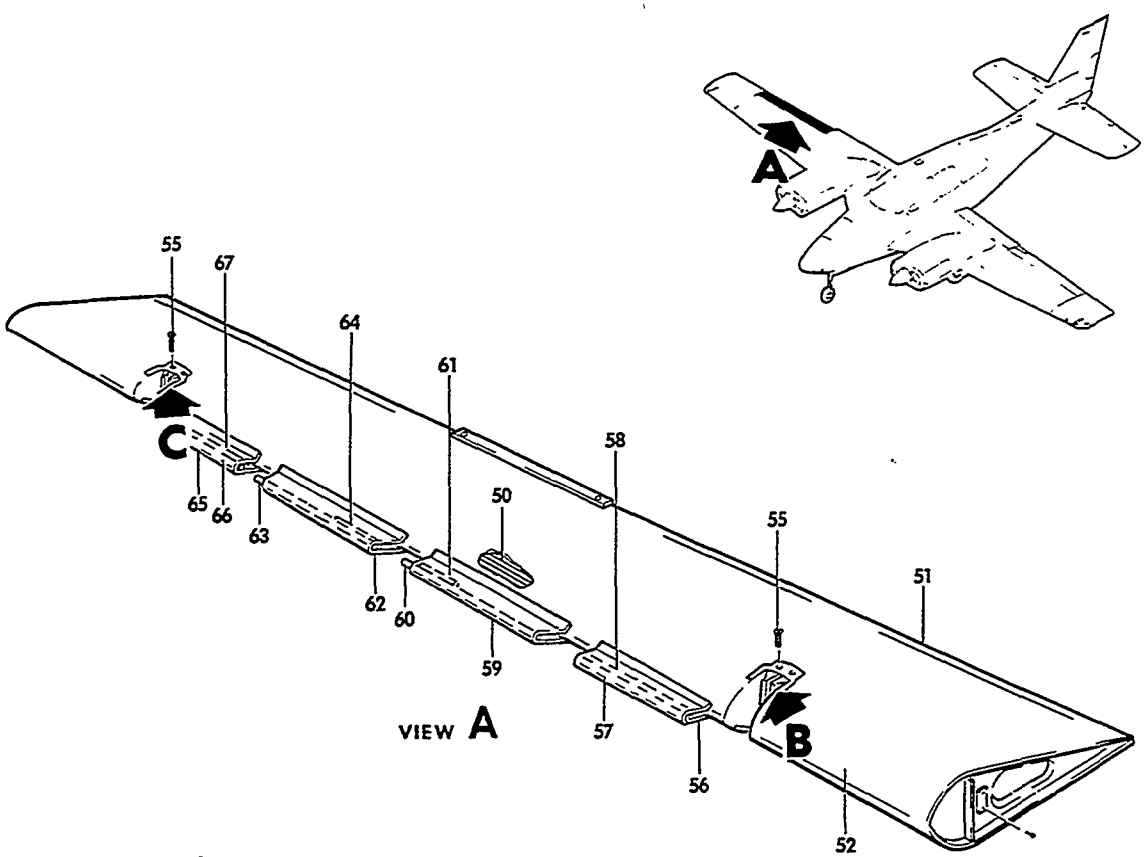

VIEW A

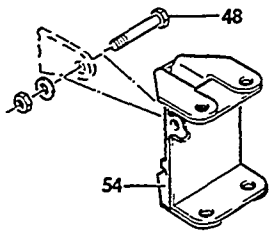

VIEW C

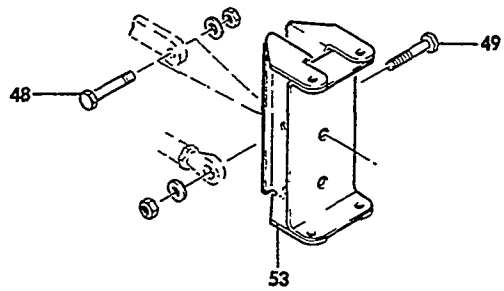

55-41-9

VIEW B

FIGURE 50-10.AILERON ASSEMBLY
/SHEET 3 OF 4 SHEETS/

ATA CODE & INDEX NO.	PART NO.	DESCRIPTION 1 2 3 4 5 6 7	UNITS PER ASSY	USABLE ON CODE
50-10	35-135025	AILERON ASSY,RH/ORDER 33-130000-44/	NP	1
	33-130000-44	AILERON ASSY,RH	1	2
		/ATTACHING PARTS/		
- 48	AN3-7A/M/	BOLT	2	
	AN960-10	WASHER	2	
	MS20365-1032	NUT/SUPERSEDES AN365-1032 NUT/	2	
- 49	AN4-10A/M/	BOLT	1	
	AN960-416	WASHER	1	
	MS20365-428	NUT	1	
		——*——		
- 50	35-135025-4	. SPAR	1	1
	33-130000-1	. SPAR	1	2
- 51	35-135025-12	. SPACER	1	1
	33-130000-5	. SPACER	1	2
- 52	35-135025-6	. SKIN	1	1
	33-130000-3	. SKIN	1	2
- 53	35-135025-36	. HINGE ASSY,AILERON INBD RH	1	
- 54	35-135025-32	. HINGE ASSY,AILERON OUTBD RH	1	
		/ATTACHING PARTS/		
- 55	NAS221-9	. SCREW	8	
	AN960-10L	. WASHER	8	
	112105	. WASHER/BETWEEN NUTPLATE & SPAR/	8	
	MS21047L3	. NUTPLATE	8	
		——*——		
	33-130000-35	. WEIGHT ASSY,STATIC OVERBALANCE	1	
- 56	35-135025-106	. . CLIP	1	1
	33-130000-17	. . CLIP	1	2
- 57	35-135025-2	. . WEIGHT,STATIC OVERBALANCE	1	
- 58	33-130000-21	. . WEIGHT ASSY,STATIC OVERBALANCE	1	
	33-130000-37	. WEIGHT ASSY	1	
- 59	35-135025-22	. . CLIP	1	1
	33-130000-13	. . CLIP	1	2
- 60	35-135025-2	. . WEIGHT,STATIC OVERBALANCE	1	
- 61	35-135025-40	. . WEIGHT,STATIC OVERBALANCE ADDITION	1	
	33-130000-31	. WEIGHT ASSY	1	
- 62	35-135025-28	. . CLIP	1	1
	33-130000-15	. . CLIP	1	2
- 63	35-135025-2	. . WEIGHT,STATIC OVERBALANCE	1	
- 64	35-135025-40	. . WEIGHT,STATIC OVERBALANCE ADDITION	1	
	33-130000-33	. WEIGHT ASSY	1	
- 65	35-135025-108	. . CLIP	1	1
	33-130000-19	. . CLIP	1	2
- 66	35-135025-2	. . WEIGHT,STATIC OVERBALANCE	1	
- 67	33-130000-21	. . WEIGHT ASSY,STATIC OVERBALANCE	1	

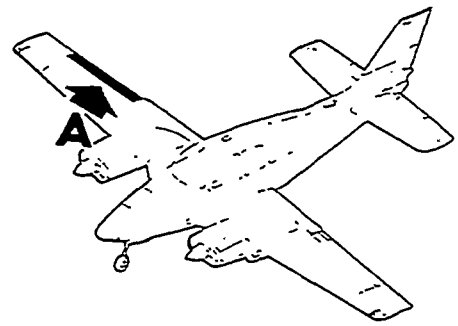

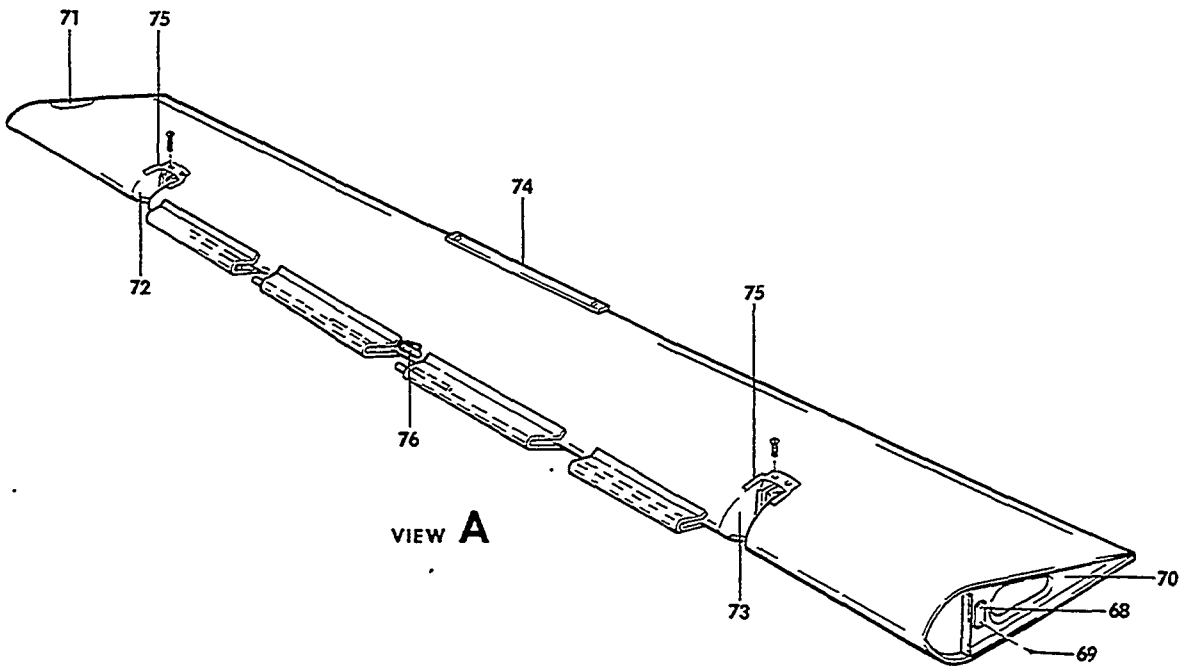

FIGURE 50-10. AILERON ASSEMBLY
/SHEET 4 OF 4 SHEETS/

ATA CODE & INDEX NO.	PART NO.	DESCRIPTION 1 2 3 4 5 6 7	UNITS PER ASSY	USABLE ON CODE
50-10 - 68	103637	PLACARD	1	
		/ATTACHING PARTS/		
- 69	49384	FASTENER	2	
		——*——		
- 70	35-135025-8	RIB,INBD RH	1	
- 71	35-135025-10	RIB,OUTBD RH	1	
- 72	45-135031-55	RIB	1	
- 73	45-135031-57	RIB	1	
- 74	35-135025-20	TAB,FIXED TRIM	1	1
	33-130000-7	TAB,FIXED TRIM	1	2
- 75	35-135025-104	DOUBLER	2	1
	33-130000-9	DOUBLER	2	2
- 76	45-135041	DOUBLER	1	1
	33-130000-11	DOUBLER	1	2

CODES OF EFFECTIVITY

1 TC-1 THRU TC-65

2 TC-66 THRU TC-1607
TE-1 THRU TE-942
EXCEPT TE-938

3 TC-1 THRU TC-1360
TE-1 THRU TE-900

4 TC-1361 THRU TC-1607
TE-901 THRU TE-942
EXCEPT TE-938

"END"

CHAPTER

61

PROPELLERS/ PROPULSORS

LIST OF PAGES & TABLE OF CONTENTS FOR CHAPTER 61-00-00 PROPELLERS

CHAP/SUB-SECT & UNIT	PAGE NO.	EFFECTIVE DATE	TABLE OF CONTENTS
61-00-00	1	04/05/85	LIST OF PAGES & TABLE OF CONTENTS
61-00-00	2	04/05/85	
61-10-01	1	03/10/78	2 BLADE MCCAULEY PROPELLER ASSEMBLY
61-10-01	2	03/10/78	TC-1 THRU TC-472 EXCEPT TC-371 AND TC-408
61-10-01	3	03/10/78	
61-10-02	1	03/10/78	2 BLADE MCCAULEY PROPELLER ASSEMBLY
61-10-02	2	03/10/78	TC-371,TC-408,TC-473 THRU TC-1415
61-10-02	3	04/05/85	
61-10-03	1	03/10/78	2 BLADE HARTZELL PROPELLER ASSEMBLY
61-10-03	2	03/10/78	TC-1416 THRU TC-1607
61-10-03	3	03/10/78	
61-10-04	1	03/10/78	3 BLADE HARTZELL PROPELLER ASSEMBLY
61-10-04	2	03/10/78	TC-502 THRU TC-1418
61-10-04	3	03/10/78	
61-10-05	1	03/10/78	3 BLADE HARTZELL PROPELLER ASSEMBLY
61-10-05	2	03/10/78	TC-1419 THRU TC-1607
61-10-05	3	04/05/85	
61-12-01	1	03/10/78	2 BLADE MCCAULEY PROPELLER
61-12-01	2	03/10/78	TE-1 THRU TE-848
61-12-01	3	04/05/85	
61-12-02	1	03/10/78	2 BLADE HARTZELL PROPELLER
61-12-02	2	03/10/78	TE-849 THRU TE-942 EXCEPT TE-938
61-12-02	3	03/10/78	
61-12-03	1	03/10/78	3 BLADE MCCAULEY PROPELLER
61-12-03	2	03/10/78	TE-1 THRU TE-860
61-12-03	3	03/10/78	
61-12-04	1	03/10/78	3 BLADE HARTZELL PROPELLER
61-12-04	2	03/10/78	TE-849 THRU TE-942 EXCEPT TE-938
61-12-04	3	04/05/85	
61-20-01	1	03/10/78	PROPELLER GOVERNOR
61-20-01	2	03/10/78	TC-1 THRU TC-936 EXCEPT TC-663
61-20-01	3	03/10/78	
61-20-01	4	03/10/78	
61-20-01	5	03/10/78	
61-20-02	1	03/10/78	PROPELLER GOVERNOR
61-20-02	2	03/10/78	TC-663,TC-937 THRU TC-1398 AND TC-1402
61-20-02	3	03/10/78	
61-20-02	4	03/10/78	
61-20-02	5	03/10/78	
61-20-03	1	03/10/78	PROPELLER GOVERNOR
61-20-03	2	03/10/78	TC-1399 THRU TC-1607 EXCEPT TC-1402
61-20-03	3	03/10/78	
61-20-03	4	03/10/78	
61-20-03	5	03/10/78	
61-22-01	1	04/05/85	PROPELLER GOVERNOR
61-22-01	2	03/10/78	TE-1 THRU TE-851
61-22-01	3	03/10/78	
61-22-01	4	03/10/78	
61-22-01	5	03/10/78	

LIST OF PAGES & TABLE OF CONTENTS
FOR
CHAPTER 61-00-00 PROPELLERS

CHAP/SUB-SECT & UNIT	PAGE NO.	EFFECTIVE DATE	TABLE OF CONTENTS
61-22-02	1	03/10/78	PROPELLER GOVERNOR
61-22-02	2	03/10/78	TE-852 THRU TE-942 EXCEPT TE-938
61-22-02	3	03/10/78	
61-22-02	4	03/10/78	
61-22-02	5	03/10/78	
61-24-01	1	03/10/78	PROPELLER ACCUMULATOR
61-24-01	2	03/10/78	
61-24-01	3	04/05/85	

61-10-01
2 BLADE MCCAULEY PROPELLER ASSEMBLY
TC-1 THRU TC-472 EXCEPT TC-371 AND TC-408

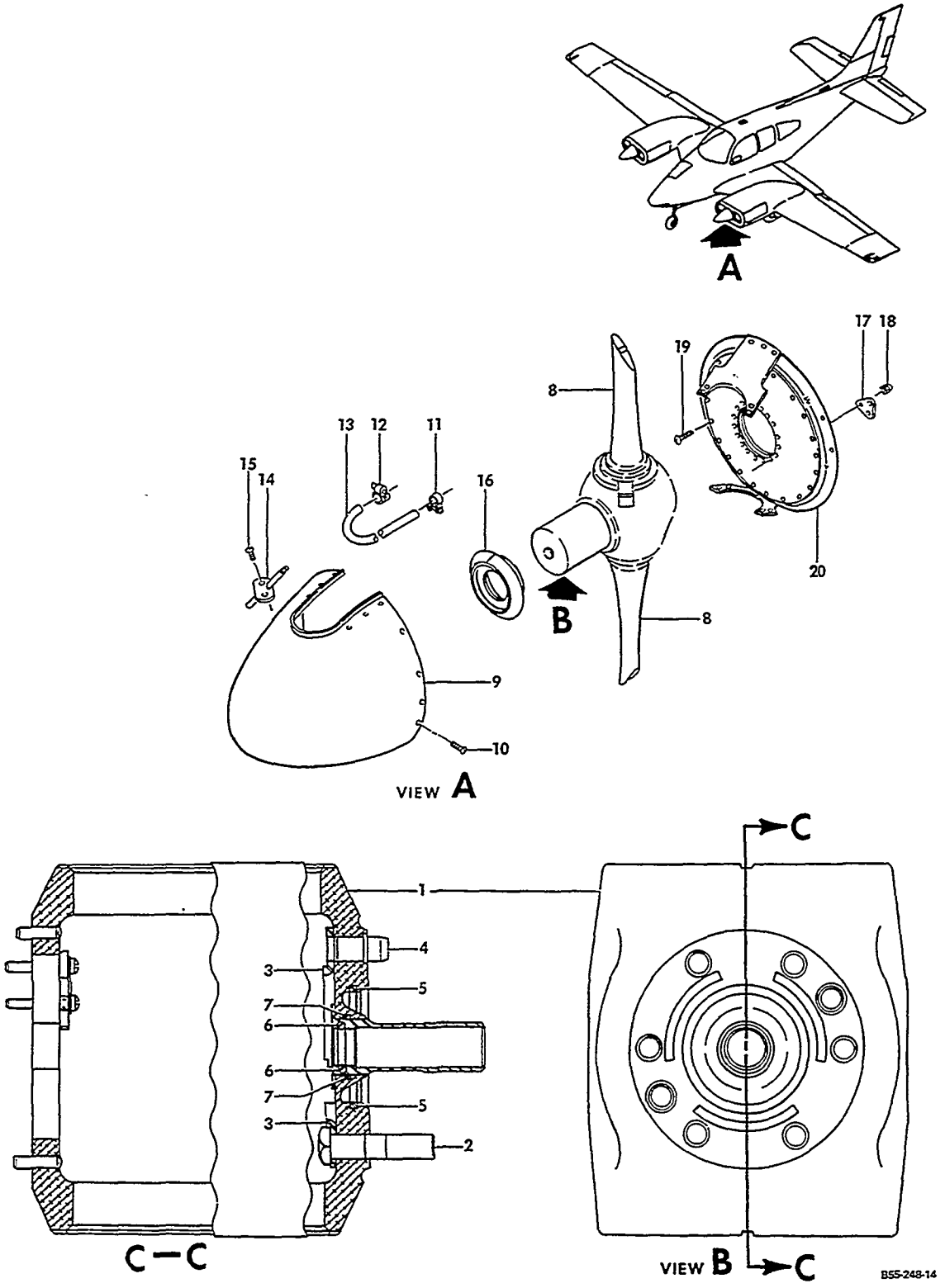

FIGURE 10-01.2 BLADE PROPELLER ASSEMBLY

ATA CODE & INDEX NO.	PART NO.	DESCRIPTION 1 2 3 4 5 6 7	UNITS PER ASSY	USABLE ON CODE
10-01	96-960006-603	PROP ASSY,2 BLADE/ANTI-ICE EQUIPPED/.	1	1
		/SEE CHAPTER 30 FOR ANTI-ICE COMPONENTS/		
	2AF36C39P788FMO	PROP ASSY,2 BLADE	1	1
- 1	D2321/C39	. HUB ASSY.	1	1
		/ATTACHING PARTS/		
- 2	A1561-2	. BOLT,HUB MOUNTING	6	1
- 3	A2185	. WASHER,FLANGE	3	
		——*——		
- 4	A3047	. DOWEL,HUB ALIGNMENT	2	1
- 5	A1633-3	. PACKING,O RING.	1	1
- 6	A1633-9	. PACKING,O RING.	1	1
- 7	A1633-22	. PACKING,O RING.	1	1
- 8	788FMO	. BLADE.	1	1
	96-910001-65	. SPINNER ASSY,2 BLADE PROP/WITHOUT ANTI-ICE/ .	1	1
	96-960006-18	. SPINNER ASSY,2 BLADE PROP/WITH ANTI-ICE/. . .	1	1
- 9	D2747	. . SHELL,SPINNER/WITHOUT ANTI-ICE/	1	1
	D2793	. . SHELL,SPINNER/WITH ANTI-ICE/.	1	1
- 10	A1635-39	. . SCREW	22	1
	A1638-5	. . WASHER,FIBER.	22	1
- 11	A2873	. . CLAMP,HOSE/WITH ANTI-ICE/	2	1
- 12	A2873-3	. . CLAMP,HOSE/WITH ANTI-ICE/	2	1
- 13	A2779-2	. . TUBE,RUBBER/WITH ANTI-ICE/.	2	1
- 14	A2927	. . TUBE ASSY/WITH ANTI-ICE/.	2	1
- 15	A1635-39	. . SCREW	4	1
	A1638-5	. . WASHER.	4	1
- 16	B2848	. . SUPPORT,SPINNER/WITH OR WITHOUT ANTI-ICE/ .	1	1
- 17	A2495	. . LUG,SPINNER BULKHEAD.	6	1
- 18	A1639-4	. . NUT	12	1
- 19	A1635-38	. . SCREW	12	1
	A1638-8	. . WASHER,MYLAR.	12	1
- 20	D2870	. . BULKHEAD AND FILLET ASSY/WITHOUT ANTI-ICE/.	1	1
	D2801	. . BULKHEAD AND SLINGER RING ASSY.	1	1
		/WITH ANTI-ICE/		

NOTE FOR BREAKDOWN OF ASSEMBLIES LISTED ABOVE,
SEE MCCAULEY MANUAL NO.651030 OR 710930.

CODES OF EFFECTIVITY

1 TC-1 THRU TC-472
EXCEPT TC-371,TC-408

"END"

61-10-02
2 BLADE MCCAULEY PROPELLER ASSEMBLY
TC-371,TC-408,TC-473 THRU TC-1415

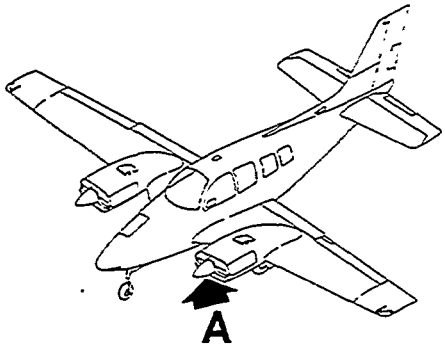

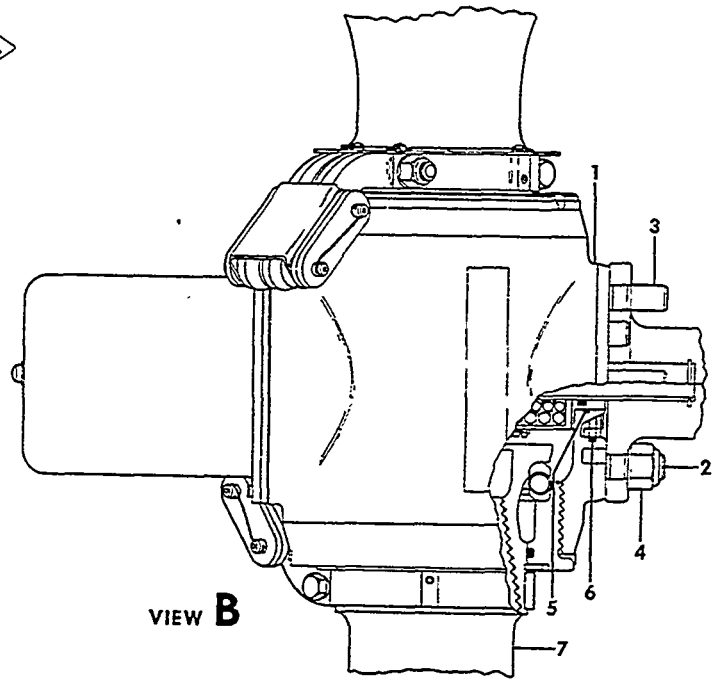

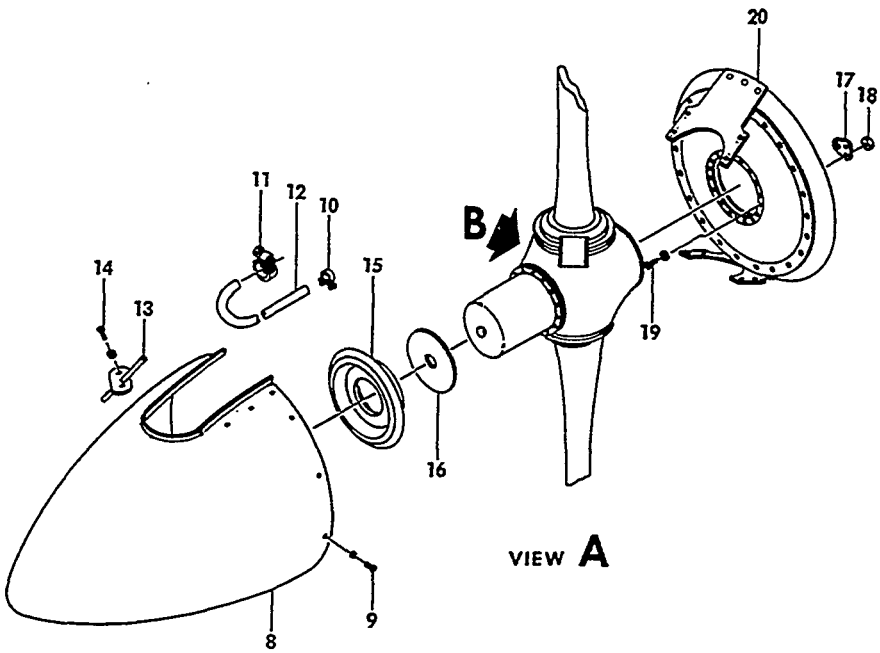

BSS-248-15

FIGURE 10-02.2 BLADE PROPELLER ASSEMBLY

SUB-SECT UNIT & ITEM NO.	PART NO.	DESCRIPTION 1 2 3 4 5 6 7	UNITS PER ASSY	USABLE ON CODE
10-02	96-960006-604	PROPELLER ASSY,2 BLADE/ANTI-ICE EQUIPPED/ . . .	1	1
		/SEE CHAPTER 30 FOR ANTI-ICE COMPONENTS/		
	96-960007-614	PROPELLER ASSY/ELEC DEICE EQUIPPED/	1	4
		/SEE CHAPTER 30 FOR DEICE COMPONENTS/		
	2AF34C55/78FF-0	PROPELLER,ASSY,2 BLADE.	1	1
- 1	D3273	. HUB ASSY.	1	1
		/ATTACHING PARTS/		
- 2	B3099	. STUD.	6	
- 3	A3047	. DOWEL,HUB ALIGNMENT	6	
R	A1638-2	. WASHER.	6	
- 4 R	A1639-2	. NUT	6	
		——*——		
- 5	A1633-9	. PACKING,O RING.	1	1
- 6	A1633-3	. PACKING,O RING.	1	1
	D3153	. BLADE ASSY,PROP	1	1
- 7	78FF-0	. . BLADE,PROP.	1	1
	96-910001-123	. SPINNER ASSY,2 BLADE PROP/WITHOUT ANTI-ICE/ .	1	1
	96-960006-29	. SPINNER ASSY,2 BLADE PROP/ANTI-ICE EQUIPPED/.	1	2
	96-960008-1	. SPINNER ASSY,2 BLADE PROP/ANTI-ICE EQUIPPED/.	1	3
	96-960007-612	. SPINNER ASSY,2 BLADE PROP/WITH ELEC ANTI-ICE/	1	4
		/SEE CHAPTER 30 FOR ANTI-ICE PORTION/		
- 8	D2747	. . SHELL,SPINNER/WITHOUT ANTI-ICE/	1	1
	D2793	. . SHELL,SPINNER/ANTI-ICE EQUIPPED/.	1	2
	D3461	. . SHELL,SPINNER/ANTI-ICE EQUIPPED/.	1	3
	D3419	. . SHELL,SPINNER/WITH ELEC ANTI-ICE/	1	4
- 9	A1635-39	. . SCREW	22	1
	A1638-5	. . WASHER,FIBER.	22	1
- 10	A2873	. . CLAMP/WITH ANTI-ICE/.	2	1
- 11	A2873-3	. . CLAMP/WITH ANTI-ICE/.	2	1
- 12	A2779-2	. . TUBE,RUBBER/WITH ANTI-ICE/.	2	1
- 13	A2927	. . TUBE ASSY/WITH ANTI-ICE/.	2	1
- 14	A1635-39	. . SCREW	4	1
	A1638-5	. . WASHER,FIBER.	4	1
- 15	B3275	. . SUPPORT,SPINNER/WITHOUT ANTI-ICE/	1	1
	B3275	. . SUPPORT,SPINNER/WITH ANTI-ICE/.	1	2
	B3348	. . SUPPORT,SPINNER/WITH ANTI-ICE/.	1	3
	B3348	. . SUPPORT,SPINNER/WITH ELEC ANTI-ICE/	1	4
- 16	B3281-1	. . SHIM.	AR	1
	B3281-2	. . SHIM.	AR	1
- 17	A2495	. . LUG,SPINNER BULKHEAD.	6	1
	B3465	. . LUG,SPINNER BULKHEAD.	6	4
- 18	A1639-4	. . NUT	12	1
	A1639-15	. . NUT	12	4
- 19	A1635-38	. . SCREW	12	1
	A1638-3	. . WASHER,MYLAR.	12	1
- 20	D2870	. . BULKHEAD AND FILLET ASSY/WITHOUT ANTI-ICE/.	1	1
	D2801	. . BULKHEAD AND SLINGER RING ASSY.	1	1
		/WITH ANTI-ICE/		
	D3403	. . BULKHEAD AND FILLET ASSEMBLY.	1	4

NOTE FOR BREAKDOWN OF ASSEMBLIES LISTED ABOVE,
SEE MCCAULEY MANUAL NO.651030 OR 710930.

CODES OF EFFECTIVITY

1	TC-371,TC-408,TC-473 THRU TC-1415	2	TC-371,TC-408,TC-473 THRU TC-1236
3	TC-1237 THRU TC-1415	4	TC-874 THRU TC-988

"END"

61-10-03
2 BLADE HARTZELL PROPELLER ASSEMBLY
TC-1416 THRU TC-1607

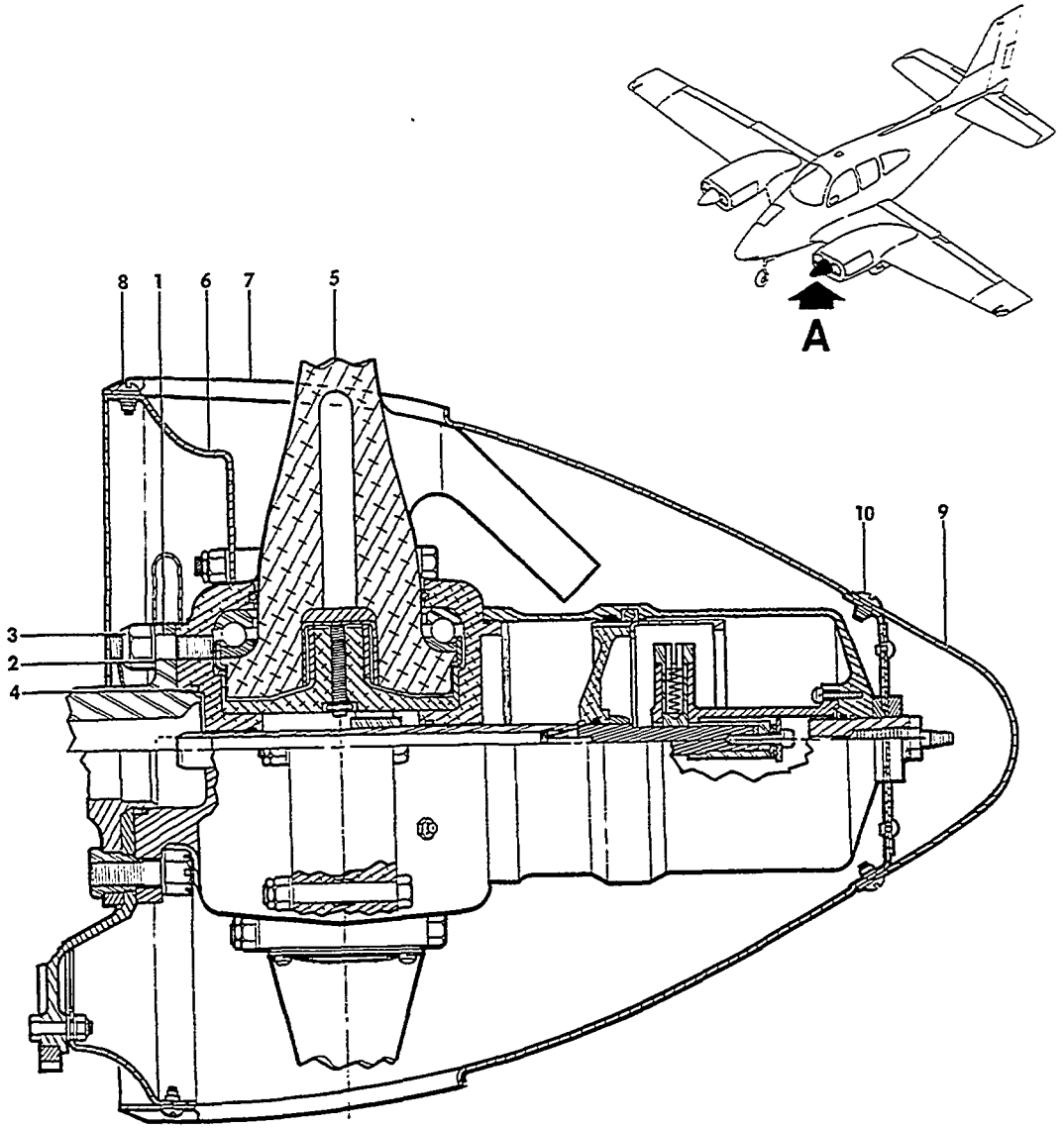

VIEW A

B-55-248-13

FIGURE 10-03.2 BLADE PROPELLER ASSEMBLY

ATA CODE & INDEX NO.	PART NO.	DESCRIPTION 1 2 3 4 5 6 7	UNITS PER ASSY	USABLE ON CODE
10-03	96-960006-608	PROPELLER ASSY,2 BLADE/ANTI-ICE EQUIPPED/ . . . /SEE CHAPTER 30 FOR ANTI-ICE COMPONENTS/	1	1
	96-960022-601	PROPELLER ASSY,2 BLADE/ELEC DEICE EQUIPPED/ . . /SEE CHAPTER 30 FOR ELEC DEICE COMPONENTS/	1	1
	BHCC2YF2CHFFC8 *	465-6 . PROPELLER ASSY,2 BLADE.	1	1
	BHCC2YF2CHC846 *	5-6 . PROPELLER ASSY,2 BLADE. . . . . /ALTERNATE FOR BHC-C2YF-2CHF/FC8465-6/	1	1
		/ATTACHING PARTS/		
- 1	A2429-4	. STUD.	6	
	5002X1 1/8	. PIN,DOWEL	2	
- 2	AN960-816	. WASHER.	6	
- 3	A2044	. NUT	6	
		----*----		
- 4	PRP909-6	. O RING,SHAFT.	1	1
- 5	FC8465-6	. BLADE,PROP/WITH LARGE PITCH CHANGE KNOB/. . .	2	1
	C8465-6	. BLADE,PROP/WITH SMALL PITCH CHANGE KNOB/. . .	2	1
	96-960022-25	. SPINNER ASSY/USED WITH ELEC.PROP DEICE/ . . . /SEE CHAPTER 30 FOR BREAKDOWN/	1	1
	C2285-1P	. . SPINNER ASSY/USED WITH OR WITHOUT DEICER. . OR ANTI-ICE COMPONENTS/	1	1
- 6	C2283	. . . BULKHEAD,SPINNER.	1	1
- 7	C2284-1	. . . DOME,SPINNER. . . . . /ATTACHING PARTS/	1	1
- 8	AN526C1032R7	. . . SCREW	12	
		----*----		
- 9	B3242	. . . CAP,SPINNER DOME. . . . . /ATTACHING PARTS/	1	1
- 10	AN507-832R8	. . . SCREW,DOME CAP.	4	
	AN501A10-6	. . . SCREW,SAFETY.	2	
		----*----		

NOTE FOR BREAKDOWN OF ASSEMBLIES LISTED ABOVE SEE HARTZELL MANUAL NO. 115E OR 117D.

CODES OF EFFECTIVITY

1 TC-1416 THRU TC-1607

"END"

61-10-04
3 BLADE HARTZELL PROPELLER ASSEMBLY
TC-502 THRU TC-1418

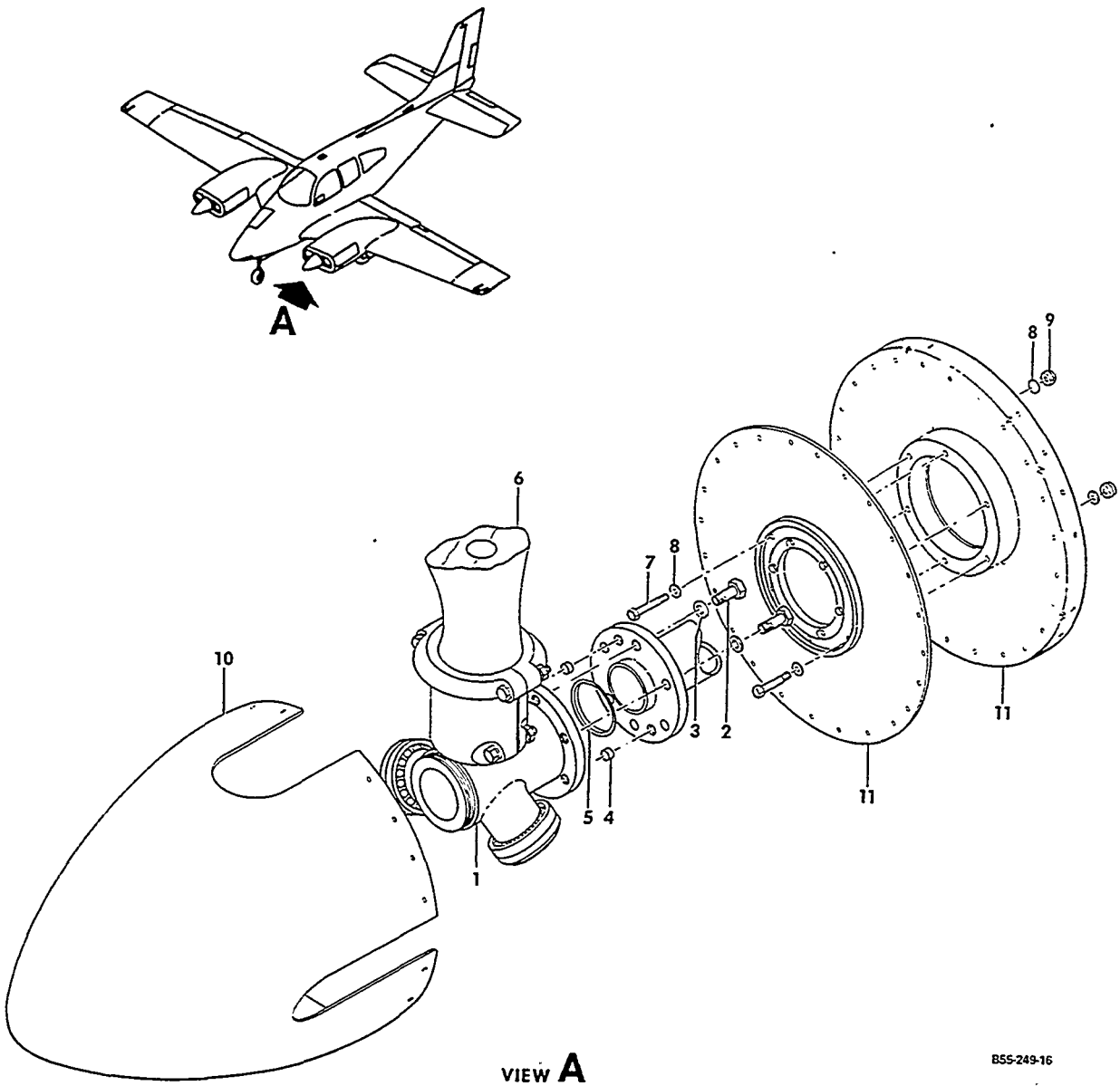

FIGURE 10-04.3 BLADE PROPELLER ASSEMBLY

ATA CODE & INDEX NO.	PART NO.	DESCRIPTION 1 2 3 4 5 6 7	UNITS PER ASSY	USABLE ON CODE
10-04	PHCA3VF28F7636DB	PROPELLER ASSY/ANTI-ICE EQUIPPED/	1	1
		/SEE CHAPTER 30 FOR ANTI-ICE COMPONENTS/		
	96-960009-604	PROPELLER ASSY/ELEC DEICE EQUIPPED/	1	2
		/SEE CHAPTER 30 FOR ELEC DEICE COMPONENTS/		
	PHCA3VF28F7636D	PROPELLER ASSY.	1	1
- 1	840-83	. HUB ASSY.	1	1
		/ATTACHING PARTS/		
- 2	AN8H10A	. BOLT.	6	
- 3	AN960-816	. WASHER.	18	
- 4	5002X1	. PIN,DOWEL	2	
- 5	PRP909-6	. O RING,SHAFT.	2	
		——*——		
- 6	V7636D	. BLADE	3	1
	96-960009-606	. SPINNER ASSY/WITH ELEC DEICE/	1	2
		/SEE CHAPTER 30 FOR ELEC DEICE COMPONENTS		
	836-36P	. SPINNER ASSY/WITH ANTI-ICE/	1	1
		/SEE CHAPTER 30 FOR ANTI-ICE COMPONENTS/		
	836-37P	. SPINNER ASSY/WITHOUT ANTI-ICE OR DEICE/ . . .	1	1
		/ATTACHING PARTS/		
- 7	AN4-16A	. BOLT.	6	
- 8	AN960-416L	. WASHER.	6	
	A1864	. WASHER,PLASTIC.	6	
- 9	H10-4	. NUT	6	
		——*——		
- 10	C1872-4	. . DOME.	1	1
		/ATTACHING PARTS/		
	AN526C1032	. . SCREW	18	
		——*——		
- 11	D1976-8R	. . BULKHEAD ASSY/WITH OR WITHOUT ELEC DEICE/ .	1	1
	D1976-6R	. . BULKHEAD ASSY/WITH ANTI-ICE/.	1	1

NOTE FOR BREAKDOWN OF ASSEMBLIES LISTED ABOVE
SEE HARTZELL MANUAL NO.114A.

CODES OF EFFECTIVITY

1 TC-502 THRU TC-1418 2 TC-973 THRU TC-1418

"END"

61-10-05
3 BLADE HARTZELL PROPELLER ASSEMBLY
TC-1419 THRU TC-1607

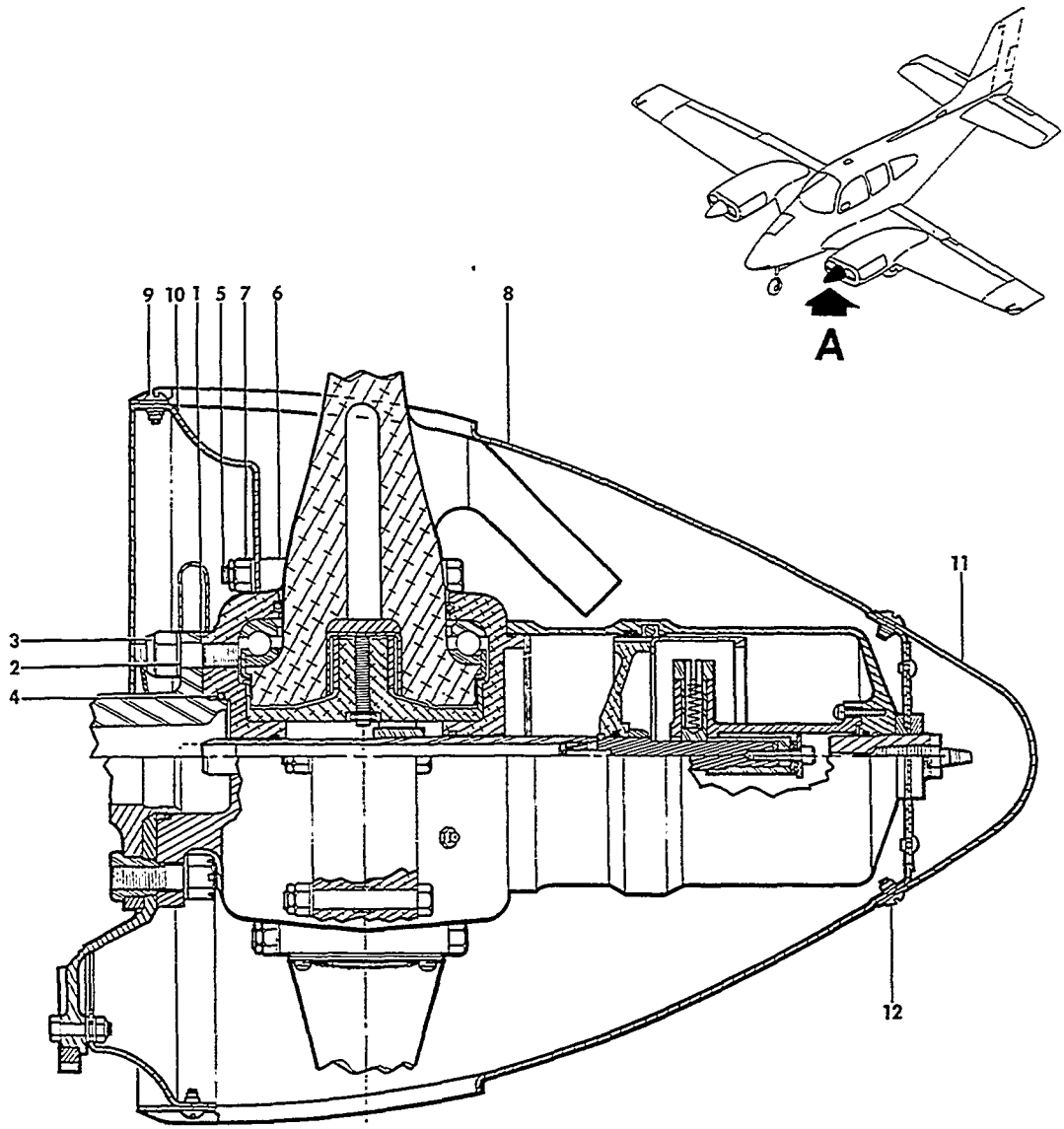

VIEW A

B-55-249-14

FIGURE 10-05.3 BLADE PROPELLER ASSEMBLY

SUB-SECT UNIT & ITEM NO.	PART NO.	DESCRIPTION 1 2 3 4 5 6 7	UNITS PER ASSY	USABLE ON CODE
10-05	96-960006-610	PROP ASSY/ANTI-ICE EQUIPPED/. . . . . /SEE CHAPTER 30 FOR ANTI-ICE COMPONENTS/	1	1
	96-960022-603	PROP ASSY/ELEC DEICE EQUIPPED/. . . . . /SEE CHAPTER 30 FOR ELEC DEICE COMPONENTS/	1	1
	PHCC3YF2C76632R	PROP ASSY . . . . . /WITH SMALL PITCH CHANGE KNOB/	1	1
	PHCC3YF2FFC766 * 32R	PROP ASSY . . . . . /WITH LARGE PITCH CHANGE KNOB/ /ATTACHING PARTS/	1	1
- 1	A2429-4	STUD.	6	
	5002X1 1/8	PIN,DOWEL	2	
- 2	A1381	WASHER.	6	
- 3 R	A2044	NUT	6	
- 4	PRP909-6	. O RING,SHAFT.	1	1
	96-960022-27	. SPINNER ASSY/USED WITH ELEC DEICE/. . . . . /SEE CHAPTER 30 FOR DEICE COMPONENTS/	1	1
	C3567-1P	. SPINNER ASSY/USED WITH OR WITHOUT ANTI-ICE/ . /ATTACHING PARTS/	1	1
- 5	A2433	. BOLT.	6	
	AN960-616	. WASHER.	18	
- 6	A2246	. SPACER.	6	
- 7	A2044	. NUT	6	
- 8	C3278-3	. . DOME,SPINNER. . . . . /ATTACHING PARTS/	1	1
- 9	AN526C1032R7	. . SCREW	18	
- 10	C3566-1	. . BULKHEAD,SPINNER.	1	1
- 11	B3264	. . CAP,SPINNER DOME. . . . . /ATTACHING PARTS/	1	1
- 12	AN507-832R8	. . SCREW	6	
	AN501A10-6	. . SCREW,SAFETY.	2	

NOTE FOR BREAKDOWN OF ASSEMBLIES LISTED ABOVE, SEE HARTZELL MANUAL NO.117DOR 115E.

CODES OF EFFECTIVITY

1 TC-1419 THRU TC-1607

"END"

61-12-01
2 BLADE MCCAULEY PROPELLER
TE-1 THRU TE-848

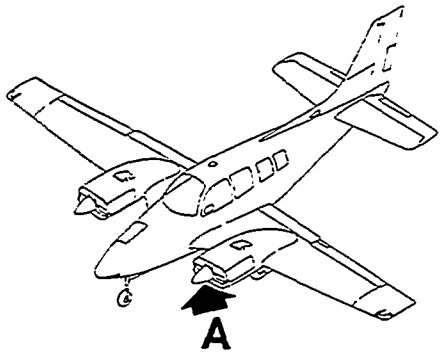

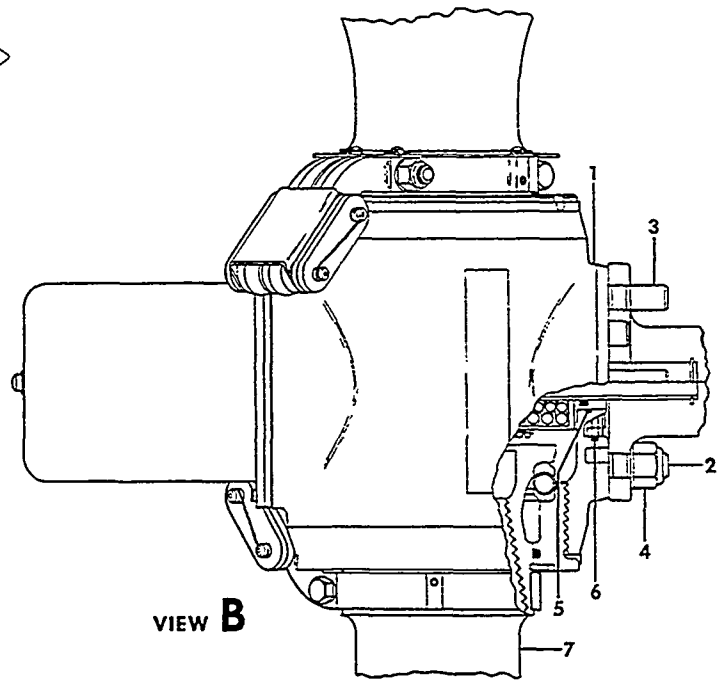

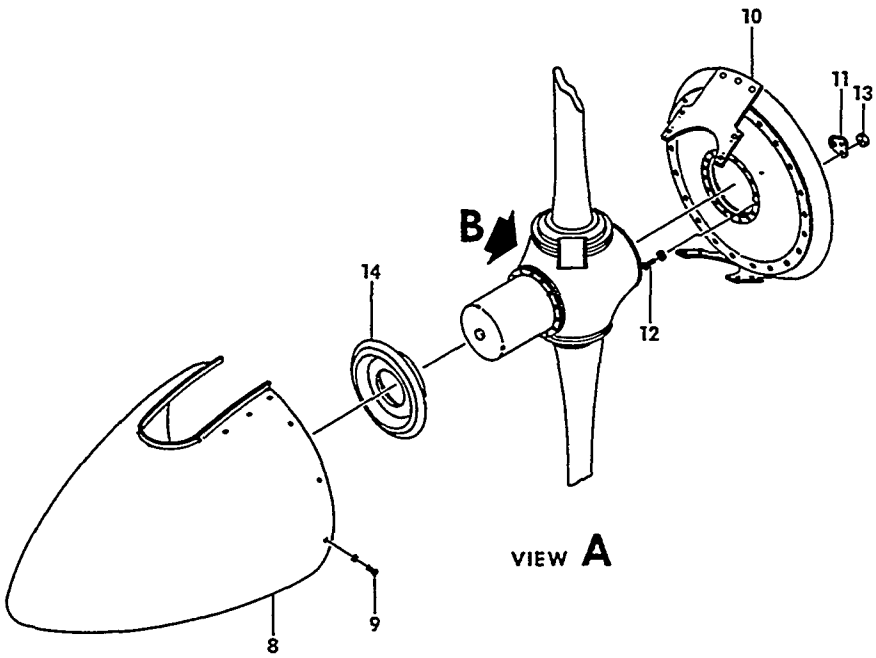

E55-248-16

FIGURE 12-01.2 BLADE MCCAULEY PROPELLER

SUB-SECT UNIT & ITEM NO.	PART NO.	DESCRIPTION 1 2 3 4 5 6 7	UNITS PER ASSY	USABLE ON CODE
12-01	96-960006-604	PROP ASSY,2 BLADE/ANTI-ICE EQUIPPED/.	1	1
		/SEE CHAPTER 30 FOR ANTI-ICE COMPONENTS/		
	96-960007-606	PROP ASSY,2 BLADE/ELEC ANTI-ICE EQUIPPED/28 V/.	1	1
		/SEE CHAPTER 30 FOR ANTI-ICE COMPONENTS/		
	2AF34C5578FF0	PROP ASSY,2 BLADE	1	1
- 1	D3273	. HUB ASSY.	1	1
		/ATTACHING PARTS/		
- 2	B3099	. STUD.	6	1
- 3	A3047	. DOWEL,HUB ALIGNMENT	6	1
R	A1638-2	. WASHER.	6	
- 4 R	A1639-2	. NUT	6	
		——*——		
- 5	A1633-9	. PACKING,O RING.	1	1
- 6	A1633-3	. PACKING,O RING.	1	1
	D3153	. BLADE ASSY,PROP	1	1
- 7	78FF-0	. . BLADE,PROP.	1	1
	96-910002-61	. SPINNER ASSY.	1	1
	96-960008-1	. SPINNER ASSY/ANTI-ICE EQUIPPED/ALCOHOL/ . . .	1	1
		/SEE CHAPTER 30 FOR ANTI-ICE COMPONENTS/		
	96-960007-608	. SPINNER ASSY/ELEC ANTI-ICE EQUIPPED/28 VOLT/.	1	1
		/SEE CHAPTER 30 FOR ELECTRIC		
		ANTI-ICE COMPONENTS/		
- 8	D3419	. . SHELL,SPINNER	1	1
		/WITH OR WITHOUT ELEC ANTI-ICE/		
	96-960008-21	. . SHELL,SPINNER/WITH ANTI-ICE/.	1	1
		/ATTACHING PARTS/		
- 9	A1635-39	. . SCREW	22	
	A1638-5	. . WASHER,FIBER.	22	
		——*——		
- 10	D2870	. . BULKHEAD AND FILLET ASSEMBLY/WITHOUT ELEC .	1	1
		OR ALCOHOL ANTI-ICE/		
	D3403	. . BULKHEAD AND FILLET ASSY.	1	1
		/WITH ELEC ANTI-ICE/		
	D2801	. . BULKHEAD AND SLINGER RING ASSY.	1	1
		/WITH ALCOHOL ANTI-ICE/		
- 11	A2495	. . LUG/WITH OR WITHOUT ALCOHOL ANTI-ICE/ . . .	6	1
	B3465	. . LUG/WITH ELEC ANTI-ICE/	6	1
- 12	A1635-38	. . SCREW	12	1
- 13	A1639-4	. . NUT/WITH OR WITHOUT ALCOHOL ANTI-ICE/ . . .	12	1
	A1639-15	. . NUT/WITH ELEC ANTI-ICE/	12	1
	A1638-8	. . WASHER,MYLAR.	12	1
- 14	B3348	. . SUPPORT,SPINNER	1	1
	B3281-1	. . SHIM,SPINNER SUPPORT.	AR	1
	B3281-2	. . SHIM,SPINNER SUPPORT.	AR	1

NOTE FOR BREAKDOWN OF ASSEMBLIES LISTED ABOVE, SEE MCCAULEY MAN.NO.710930 OR 651030-1. HARTZELL PROP NO.BHC-C2YF-2CHF/FC8475-6 MAY BE USED IN PLACE OF MCCAULEY PROP NO. 2AF34C55/78FF-0,ONLY IF BOTH PROPS AND BOTH SPINNERS ARE REPLACED.

CODES OF EFFECTIVITY

1 TE-1 THRU TE-848

61-12-02
2 BLADE HARTZELL PROPELLER
TE-849 THRU TE-942 EXCEPT TE-938

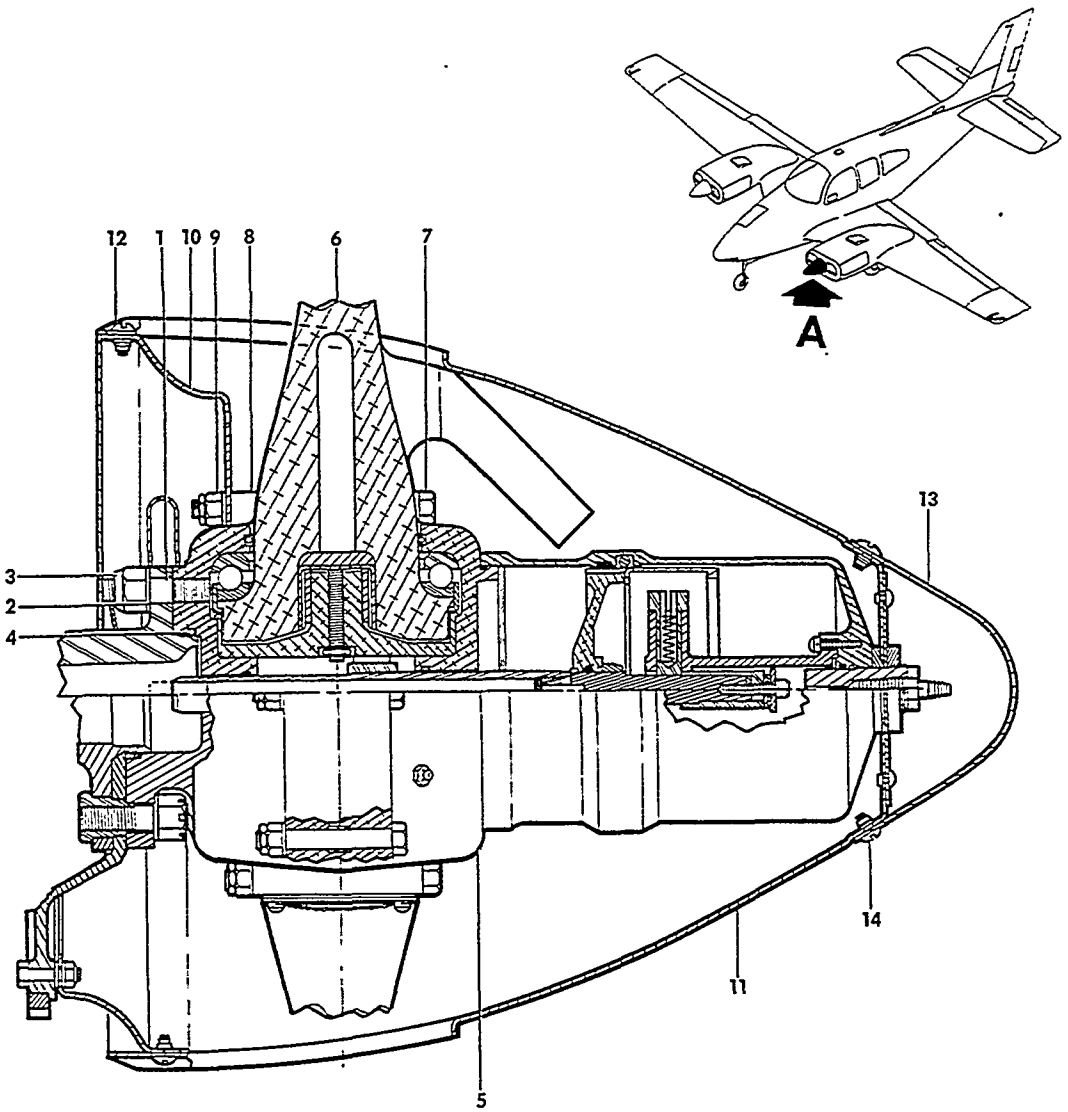

VIEW A

E-55-248-12

FIGURE 12-02.2 BLADE PROPELLER ASSEMBLY

ATA CODE & INDEX NO.	PART NO.	DESCRIPTION 1 2 3 4 5 6 7	UNITS PER ASSY	USABLE ON CODE
12-02	96-960008-610	PROP ASSY,2 BLADE/WITH ALCOHOL ANTI-ICE/. . . . /SEE CHAPTER 30 FOR ANTI-ICE COMPONENTS/	1	1
	96-960021-609	PROP ASSY,2 BLADE/WITH ELECTRIC DEICE/. . . . . /SEE CHAPTER 30 FOR DEICE COMPONENTS/	1	1
	BHCC2YF2CHFFC8 * 4756	PROP ASSY,2 BLADE. . . . . /SUPERSEDES BHC-C2YF-2C/C8475-6/ /ATTACHING PARTS/	1	1
- 1	A2429-4	STUD.	6	
	5002X1 1/8	PIN,DOWEL	2	
- 2	A1381	WASHER.	6	
- 3	A2044	NUT	6	
- 4	PRP909-6	O RING,SHAFT.	1	
		----*----		
- 5	2201-18	. HUB UNIT.	1	1
- 6	FC8475-6	. BLADE,PROPELLER	2	1
	96-960021-609	. SPINNER ASSY/WITH ELEC DEICE/ . . . . . /SEE CHAPTER 30 FOR ANTI-ICE COMPONENTS/	1	1
	C2285-1P	. SPINNER ASSY/WITH OR WITHOUT ALC ANTI-ICE/. . /SEE CHAPTER 30 FOR DEICE COMPONENTS/ /ATTACHING PARTS/	1	1
- 7	A2433	. BOLT.	4	
- 8	A2246-4	. SPACER.	4	
	AN960-616	. WASHER.	12	
- 9	22FT624	. NUT	4	
		----*----		
- 10	C2283	. . BULKHEAD,SPINNER.	1	1
- 11	C2284-1	. . DOME,SPINNER. . . . . /ATTACHING PARTS/	1	1
- 12	AN526C1032R7	. . SCREW	12	
		----*----		
- 13	B3242	. . CAP,SPINNER DOME. . . . . /ATTACHING PARTS/	1	1
- 14	AN507-832R8	. . SCREW	4	
		----*----		

NOTE FOR BREAKDOWN OF ASSEMBLIES LISTED ABOVE, SEE HARTZELL MANUAL NO.115E OR 117D. MCCAULEY PROP NO.2AF34C55/78FF-0,USED PRIOR TO TE-849,MAY BE REPLACED BY HARTZELL PROP NO.BHC-C2YF-2CHF/FC8475-6, ONLY IF BOTH PROPS AND BOTH SPINNERS ARE REPLACED.

CODES OF EFFECTIVITY

1 TE-849 THRU TE-942
EXCEPT TE-938

"END"

61-12-03
3 BLADE MCCAULEY PROPELLER
TE-1 THRU TE-860

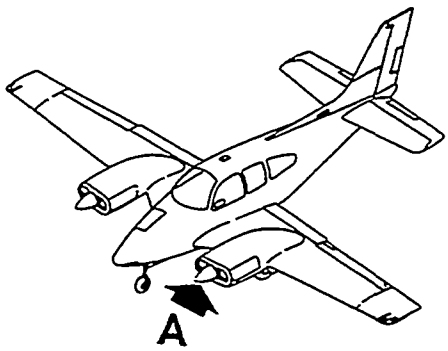

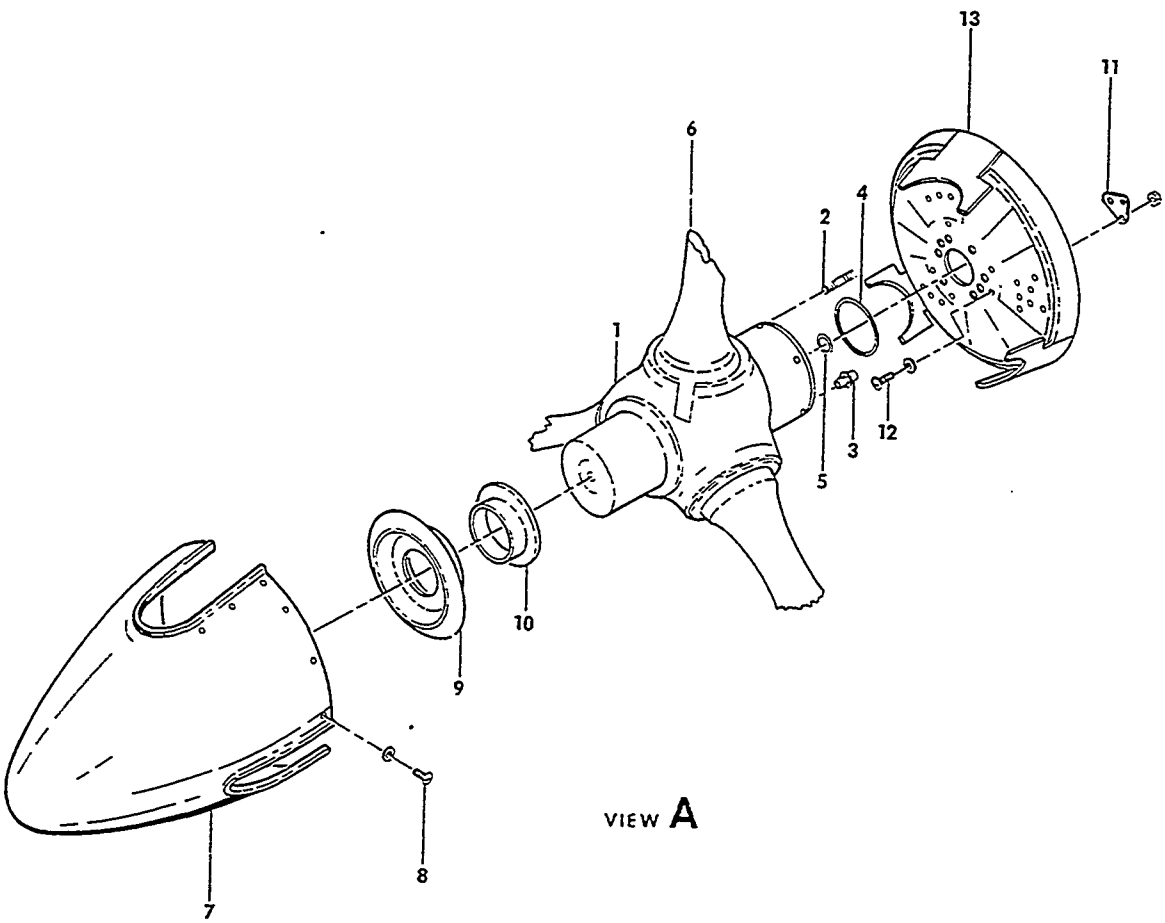

E55-249-17

FIGURE 12-03.3 BLADE MCCAULEY PROPELLER

ATA CODE & INDEX NO.	PART NO.	DESCRIPTION 1 2 3 4 5 6 7	UNITS PER ASSY	USABLE ON CODE
12-03	96-960008-601	PROP ASSY,3 BLADE/ALCOHOL ANTI-ICE EQUIPPED/. .	1	1
	96-960010-606	PROP ASSY,3 BLADE/ELECTRIC DEICE EQUIPPED/. . .	1	2
	3AF32C7582N86	PROP ASSY,3 BLADE	1	3
- 1	D4344/C75	. HUB ASSY.	1	2
		/ATTACHING PARTS/		
- 2	B4071	. STUD,HUB MOUNTING	6	
- 3	A4001	. DOWEL,HUB ALIGNMENT	2	
		——*——		
- 4	A1633-3	. PACKING,O RING.	1	2
- 5	A1633-9	. PACKING,O RING.	1	2
- 6	D3567/82N86	. BLADE ASSY.	2	2
	96-910002-65	. SPINNER ASSY.	1	3
	96-960010-654	. SPINNER ASSY/WITH ELEC DEICE/	1	2
		/SEE CHAPTER 30 FOR DEICE COMPONENTS/		
	96-960008-15	. SPINNER ASSY/WITH ALC ANTI-ICE/	1	1
		/SEE CHAPTER FOR ANTI-ICE COMPONENTS/		
- 7	D3570	. . SHELL,SPINNER/WITH AND WITHOUT ELEC DEICE/.	1	2
	D3607	. . SHELL,SPINNER/WITH ALC ANTI-ICE/.	1	1
- 8	A1635-39	. . SCREW	27	2
	A1638-5	. . WASHER,FIBER.	27	2
- 9	B3348	. . SUPPORT,SPINNER	1	2
- 10	B3707	. . SHIM.	1	2
	B3725-1	. . SHIM.	AR	2
	B3725-2	. . SHIM.	AR	2
- 11	A2495	. . LUG/WITH ALC ANTI-ICE/.	6	1
	A1639-4	. . NUT/WITH ALC ANTI-ICE/.	12	1
- 12	A1635-38	. . SCREW/WITH ALC ANTI-ICE/.	12	1
	A1638-8	. . WASHER/WITH ALC ANTI-ICE/	12	1
- 13	D3571	. . BULKHEAD,SPINNER/WITH OR W/O ELEC DEICE/. .	1	2
	D3608	. . BULKHEAD AND SLINGER RING ASSY.	1	1
		/WITH ALC ANTI-ICE/		

NOTE FOR BREAKDOWN OF ASSEMBLIES LISTED ABOVE, SEE MCCAULEY MANUAL 710930 OR 651030-1.

CODES OF EFFECTIVITY

1 TE-1 THRU TE-848 2 TE-1 THRU TE-860
3 TE-1 THRU TE-849

"END"

61-12-04
3 BLADE HARTZELL PROPELLER
TE-849 THRU TE-942 EXCEPT TE-938

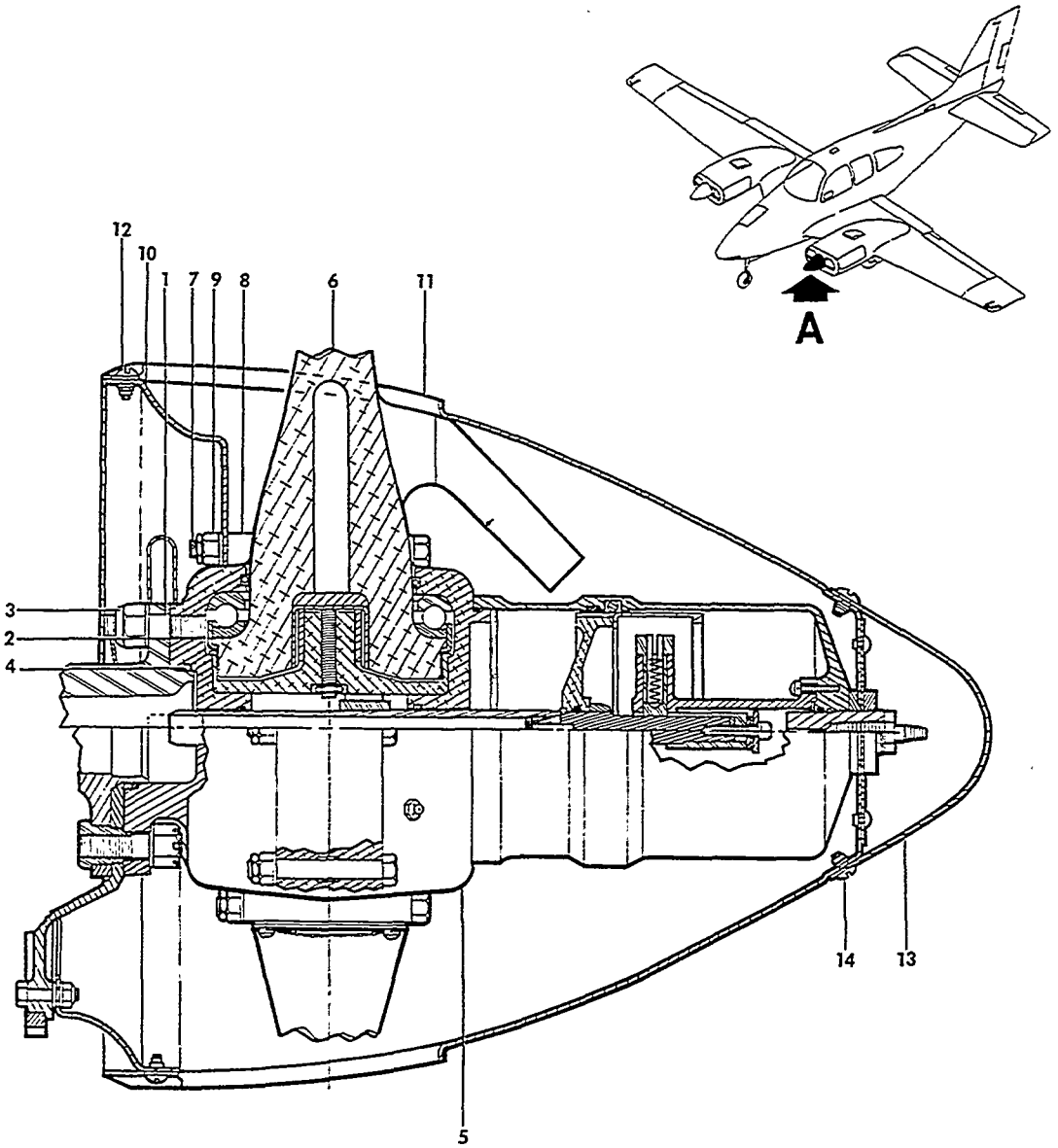

VIEW A

E-55-249-15

FIGURE 12-04.3 BLADE HARTZELL PROPELLER

SUB-SECT UNIT & ITEM NO.	PART NO.	DESCRIPTION 1 2 3 4 5 6 7	UNITS PER ASSY	USABLE ON CODE
12-04	96-960008-611	3 BLADE PROP/ALCOHOL ANTI-ICE EQUIPPED/ . . . . /SEE CHAPTER 30 FOR ANTI-ICE COMPONENTS/	1	1
	96-960020-602	3 BLADE PROP/ELEC DEICE EQUIPPED/ . . . . . /SEE CHAPTER 30 FOR ELEC DEICE COMPONENTS/	1	2
	PHCC3YF2FFC766 *	32R PROP,3 BLADE. . . . . /ATTACHING PARTS/	1	3
- 1	A2429-4	STUD,HUB MOUNTING	6	
- 2	A1381	WASHER.	6	
- 3	A2044	NUT	6	
	5002X1 1/8	PIN,DOWEL	2	
- 4	PRP909-6	O RING.	1	
		——*——		
- 5	C3260-9	. HUB ASSY,3 BLADE PROP	1	1
- 6	FC7663-2R	. BLADE	1	1
	96-960020-9	. SPINNER ASSY/WITH ELEC DEICE/	1	1
		NOTE THE 96-960020-9 IS CREATED FROM THE C3567-1P,BY THE ADDITION OF MOUNTING HOLES IN THE SPINNER BULKHEAD.		
	R C3567-1P	. SPINNER ASSY/WITH OR WITHOUT ALC ANTI-ICE/. . /ATTACHING PARTS/	1	1
- 7	A2433	. BOLT.	6	
- 8	A2246	. SPACER.	6	
	AN960-616	. WASHER.	18	
- 9	22FT624	. NUT	6	
		——*——		
- 10	C3566-1	. . BULKHEAD,SPINNER.	1	1
- 11	C3278-3	. . DOME. . . . . /ATTACHING PARTS/	1	1
- 12	AN526C1032R7	. . SCREW	18	
		——*——		
- 13	B3264	. . CAP,SPINNER DOME. . . . . /ATTACHING PARTS/	1	1
	AN501A10-6	. . SCREW,SAFETY.	2	
- 14	AN507-832R8	. . SCREW,SPINNER DOME CAP.	3	
		——*——		

NOTE FOR BREAKDOWN OF ASSEMBLIES LISTED ABOVE, SEE HARTZELL MANUAL NO.115E OR 117D.

CODES OF EFFECTIVITY

1 TE-849 THRU TE-942 EXCEPT TE-938
2 TE-861 THRU TE-942 EXCEPT TE-938
3 TE-850 THRU TE-942 EXCEPT TE-938

61-20-01
PROPELLER GOVERNOR
TC-1 THRU TC-936 EXCEPT TC-663

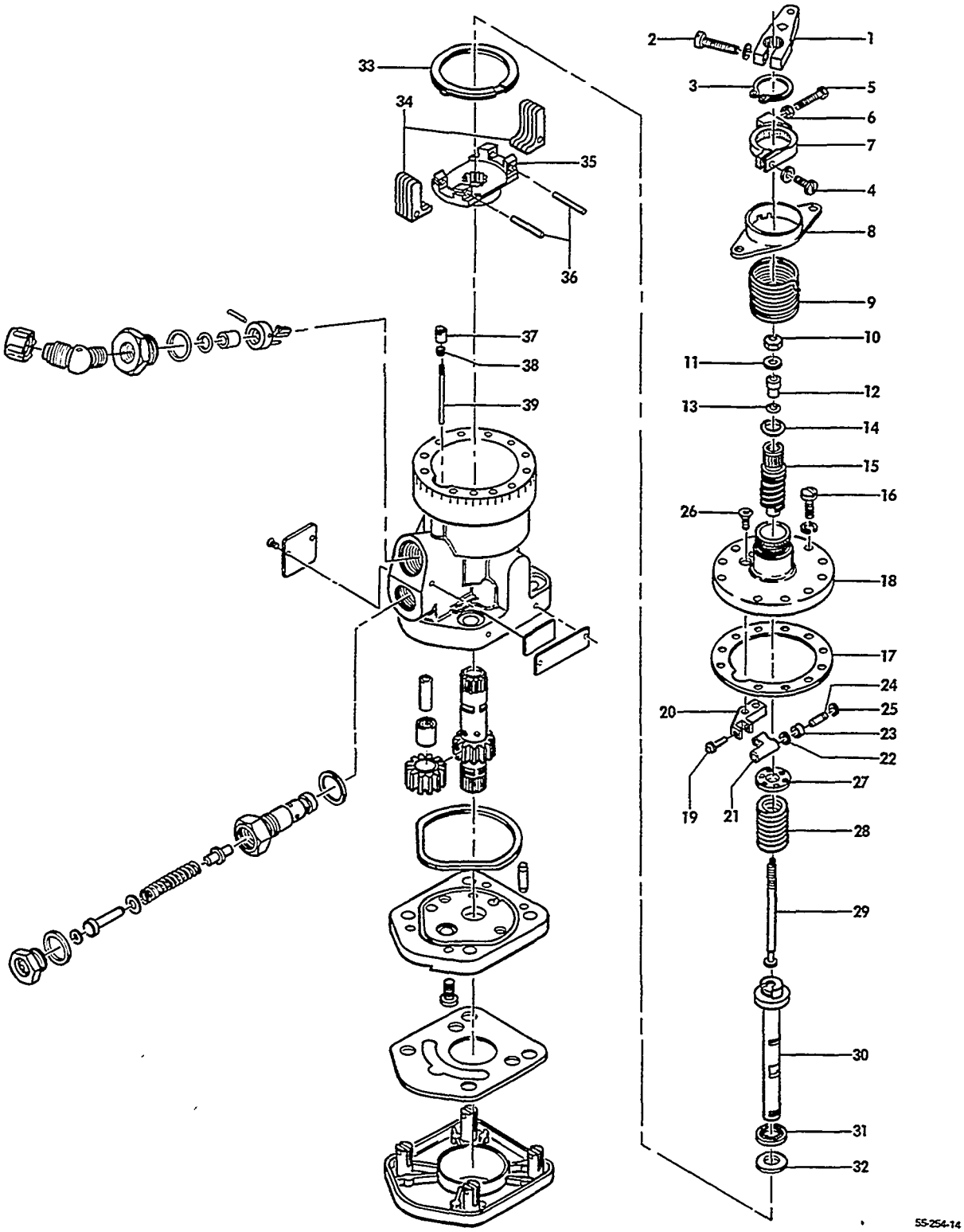

FIGURE 20-01.PROPELLER GOVERNOR
/SHEET 1 OF 2 SHEETS/

ATA CODE & INDEX NO.	PART NO.	DESCRIPTION 1 2 3 4 5 6 7	UNITS PER ASSY	USABLE ON CODE
20-01	210355	GOVERNOR ASSY,PROPELLER	1	1
- 1	210039	. LEVER,CONTROL	1	1
- 2	188434	. SCREW	1	1
	188141	. WASHER	1	1
- 3	189880	. RING,RETAINER	1	1
- 4	190189	. SCREW	1	1
	189739	. WASHER	7	1
- 5	219375	. SCREW	1	1
- 6	188302	. NUT	1	1
- 7	460433	. STOP RING	1	1
- 8	210035	. RETAINER,SPRING	1	1
- 9	191869	. SPRING,CONTROL LEVER	1	1
- 10	189522	. NUT	1	1
- 11	186283	. WASHER	1	1
- 12	210034	. BUSHING	1	1
- 13	182194	. O RING	1	1
- 14	182684	. O RING	1	1
- 15	210100	. SHAFT,SPEED ADJUST	1	1
- 16	189529	. SCREW	6	1
- 17	206595	. GASKET	1	1
	210365	. COVER ASSY	1	1
- 18	210347	. . COVER	1	1
- 19	210252	. . PIN	1	1
- 20	210322	. . BLOCK	1	1
- 21	210236	. . LEVER	1	1
- 22	186455	. . SHIM	AR	1
- 23	210242	. . ROLLER	1	1
- 24	210244	. . PIN	1	1
- 25	210277	. . RING,RETAINING	1	1
- 26	218993	. . SCREW	1	1
- 27	210358	. SEAT,SPRING	1	1
- 28	192749	. SPRING	1	1
- 29	210044	. ROD,LIFT	1	1
- 30	210331	. PLUNGER	1	1
- 31	180231	. BEARING	1	1
- 32	210216	. RACE,BEARING	1	1
- 33	192103	. RING,SPIROLOX	1	1
- 34	210289	. FLYWEIGHT	8	1
- 35	210207	. HEAD,FLYWEIGHT	1	1
- 36	210112	. PIN,PIVOT	2	1
	210297	. PUSHROD ASSY	1	1
- 37	210243	. . ADJUSTER	1	1
- 38	218148	. . INSERT	1	1
- 39	210241	. . PUSHROD	1	1

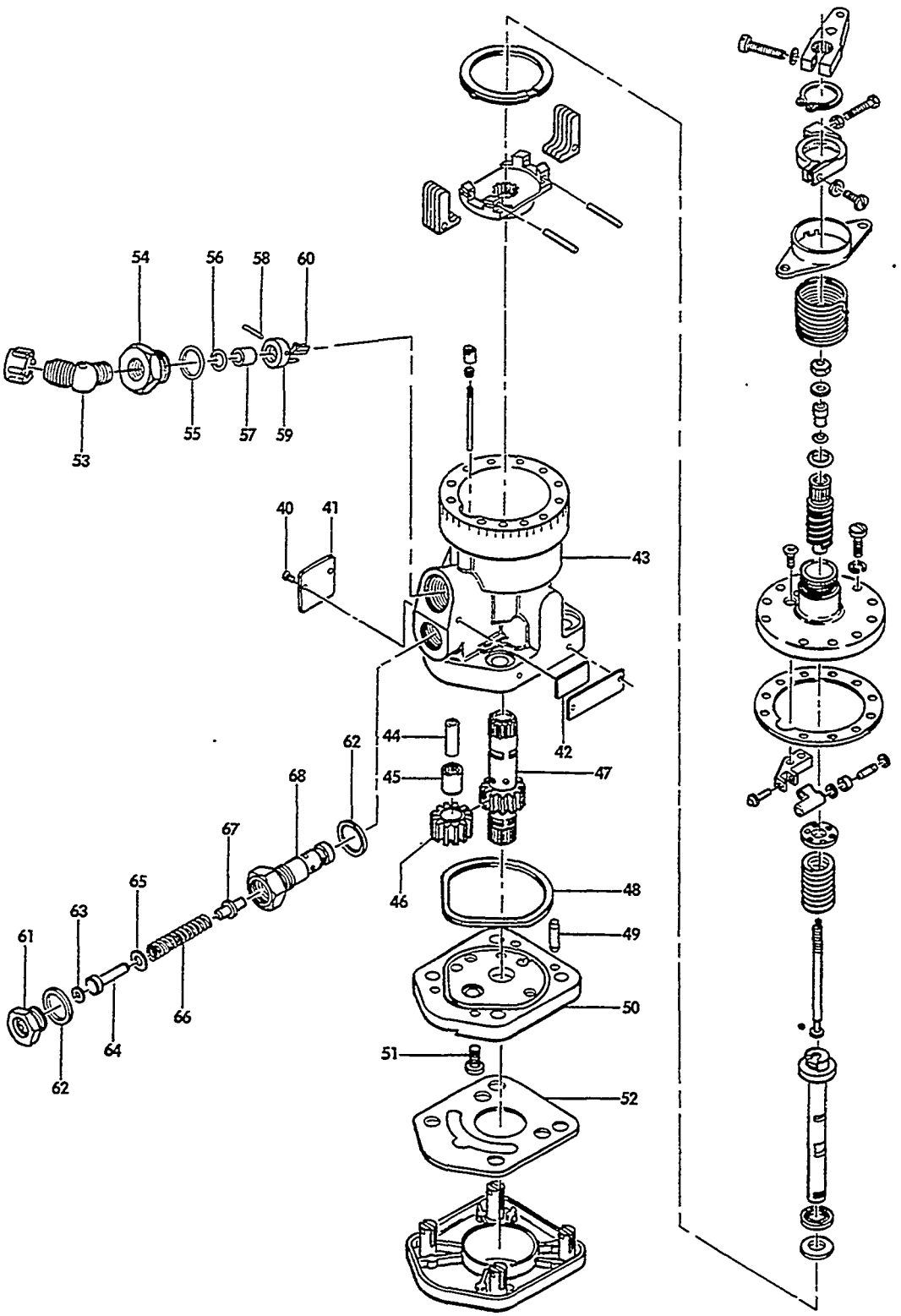

FIGURE 20-01.PROPELLER GOVERNOR
/SHEET 2 OF 2 SHEETS/

ATA CODE & INDEX NO.	PART NO.	DESCRIPTION 1 2 3 4 5 6 7	UNITS PER ASSY	USABLE ON CODE
20-01 - 40	189574	SCREW	2	1
- 41	223423	NAMEPLATE	1	1
- 42	223003	DECAL,DATE	1	1
- 43	210239	BODY,GOVERNOR	1	1
- 44	210031	STUD	1	1
- 45	210036	BEARING	1	1
- 46	204864	GEAR,IDLER	1	1
- 47	210206	GEAR,DRIVE	1	1
- 48	206336	SEAL RING,OIL	1	1
- 49	184793	PIN,DOWEL	2	1
- 50	213214	BASE	1	1
- 51	218036	SCREW	2	1
- 52	209217	GASKET	1	1
- 53	217475	ELBOW	1	1
- 54	217582	ADAPTER	1	1
- 55	182506	O RING	1	1
- 56	182478	O RING	1	1
- 57	350052	VALVE	1	1
- 58	210248	PIN	1	1
- 59	210276	BRACKET	1	1
- 60	210238	LEVER	1	1
- 61	210076	PLUG	1	1
- 62	186320	GASKET	2	1
- 63	186321	SHIM/MAX.4/	AR	1
- 64	210077	STOP	1	1
- 65	186446	SPACER	AR	1
- 66	192370	SPRING	1	1
- 67	210078	PLUNGER	1	1
- 68	210071	BODY,VALVE	1	1

NOTE 96-380031-1 MAY BE USED AS A SPARES REPLACEMENT FOR THE 210355,ONLY IF BOTH GOVERNORS ARE REPLACED.

CODES OF EFFECTIVITY

1 TC-1 THRU TC-936
EXCEPT TC-663

"END"

61-20-02
PROPELLER GOVERNOR
TC-663,TC-937 THRU TC-1398 AND TC-1402

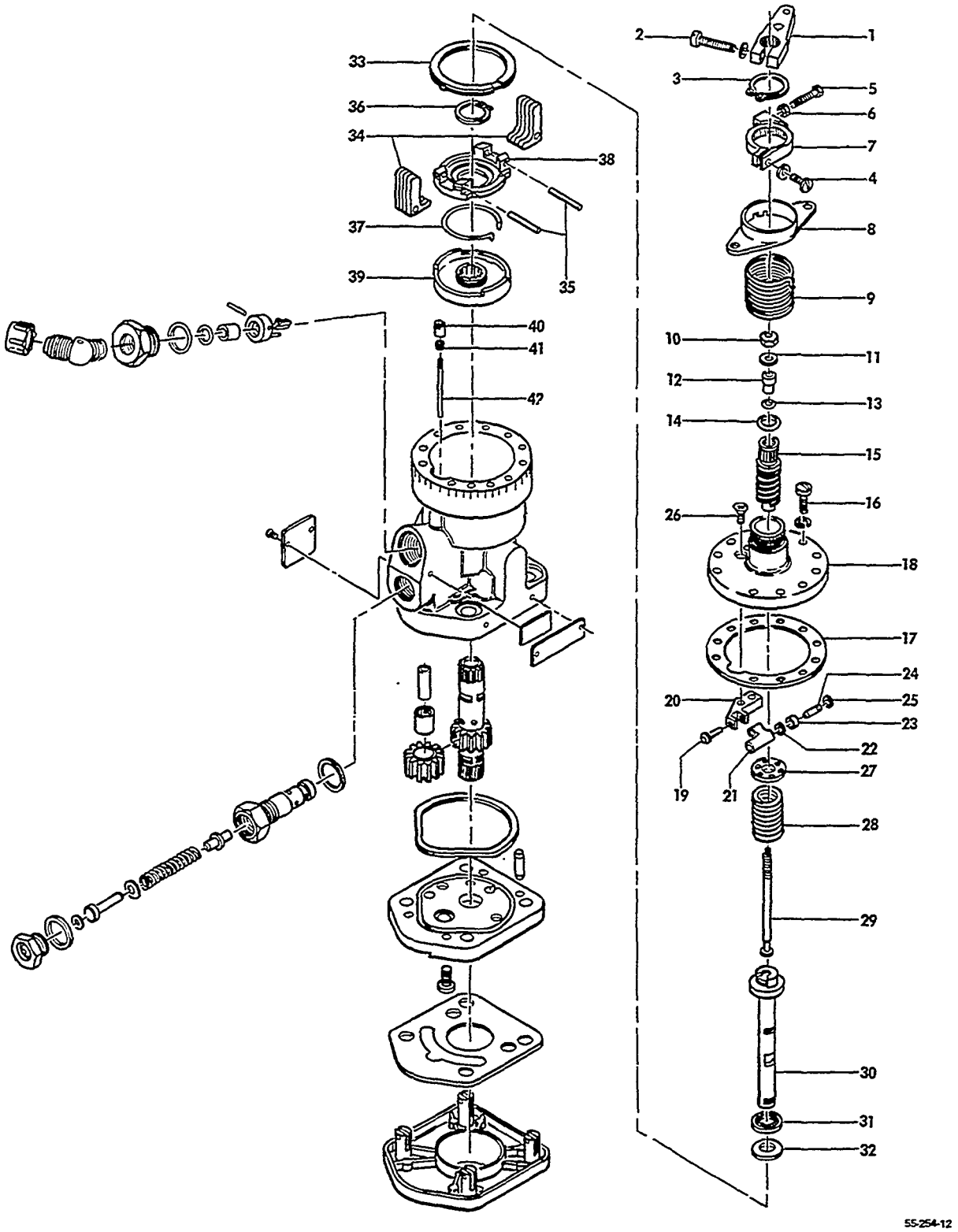

FIGURE 20-02. PROPELLER GOVERNOR
/SHEET 1 OF 2 SHEETS/

ATA CODE & INDEX NO.	PART NO.	DESCRIPTION 1 2 3 4 5 6 7	UNITS PER ASSY	USABLE ON CODE
20-02	96-380031	GOVERNOR,PROPELLER	1	1
- 1	4451-064	LEVER,SPEED ADJUSTING	1	1
- 2	188434	SCREW	1	1
	188141	WASHER	1	1
- 3	189880	RING,RETAINER	1	1
- 4	190189	SCREW	1	1
	189739	WASHER	7	1
- 5	219375	SCREW	1	1
- 6	188302	NUT	1	1
- 7	400433	RING,STOP	1	1
- 8	210035	RETAINER,SPRING	1	1
- 9	191869	SPRING,CONTROL LEVER	1	1
- 10	189522	NUT	1	1
- 11	186283	WASHER	1	1
- 12	210034	BUSHING	1	1
- 13	182194	O RING	1	1
- 14	182684	O RING	1	1
- 15	210100	SHAFT,SPEED ADJUSTING	1	1
- 16	189529	SCREW	6	1
- 17	206595	GASKET	1	1
	4060-532	COVER ASSY	1	1
- 18	210347	. COVER	1	1
- 19	210252	. PIN	1	1
- 20	210322	. BLOCK	1	1
- 21	210236	. LEVER	1	1
- 22	186455	. SHIM	AR	1
- 23	210242	. ROLLER	1	1
- 24	210244	. PIN	1	1
- 25	210277	. RING,RETAINING	1	1
- 26	218993	. SCREW	1	1
- 27	210385	SEAT,SPRING	1	1
- 28	192749	SPRING	1	1
- 29	210044	ROD,LIFT	1	1
- 30	210331	PLUNGER	1	1
- 31	180231	BEARING	1	1
- 32	210216	RACE,BEARING	1	1
- 33	192103	RING,SPIROLOX	1	1
- 34	210289	FLYWEIGHT	8	1
- 35	210112	PIN	2	1
	210314	HEAD ASSY,FLYWEIGHT	1	1
- 36	189611	. RING,RETAINER	1	1
- 37	192662	. SPRING,DRIVE	1	1
- 38	210316	. HEAD,FLYWEIGHT	1	1
- 39	210317	. DRIVER	1	1
	210297	PUSHROD ASSY,	1	1
- 40	210243	. ADJUSTER,PUSHROD	1	1
- 41	218148	. INSERT	1	1
- 42	210241	. PUSHROD	1	1

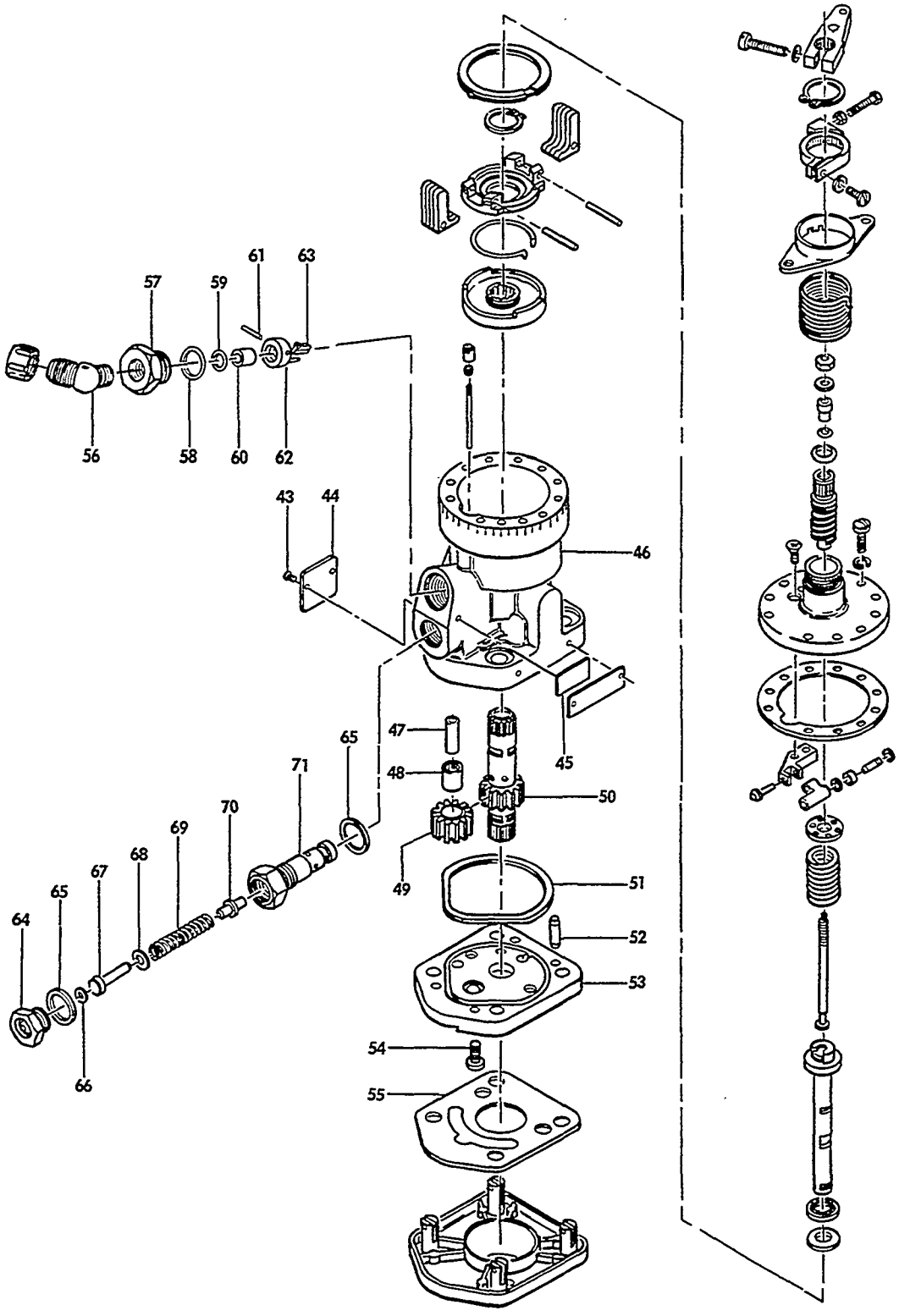

FIGURE 20-02.PROPELLER GOVERNOR
/SHEET 2 OF 2 SHEETS/

ATA CODE & INDEX NO.	PART NO.	DESCRIPTION 1 2 3 4 5 6 7	UNITS PER ASSY	USABLE ON CODE
20-02 - 43	189574	SCREW	2	1
- 44	223423	NAMEPLATE	1	1
- 45	223003	DECAL,DATE	1	1
- 46	210239	BODY	1	1
- 47	210031	STUD	1	1
- 48	210036	BEARING	1	1
- 49	204864	GEAR,IDLER	1	1
- 50	210206	GEAR,DRIVE	1	1
- 51	206336	SEAL,OIL	1	1
- 52	184793	PIN,DOWEL	2	1
- 53	213214	BASE,GOVERNOR	1	1
- 54	218036	SCREW	2	1
- 55	209217	GASKET,MOUNTING	1	1
- 56	217475	ELBOW	1	1
- 57	217582	ADAPTER	1	1
- 58	1355-168	O RING	1	1
- 59	182621	O RING	1	1
- 60	5261-036	VALVE ASSY	1	1
- 61	210248	PIN	1	1
- 62	210276	BRACKET ASSY	1	1
- 63	210238	LEVER	1	1
- 64	210076	PLUG	2	1
- 65	186320	GASKET	2	1
- 66	186321	SHIM/MAXIMUM OF 4/	AR	1
- 67	210077	STOP	1	1
- 68	186446	SPACER	AR	1
- 69	192370	SPRING	1	1
- 70	210078	PLUNGER	1	1
- 71	210071	BODY	1	1

NOTE 96-380031-1 GOVERNOR MAY BE USED TO REPLACE THE 96-380031 GOVERNOR, ONLY IF BOTH GOVERNORS ARE REPLACED.

CODES OF EFFECTIVITY

1 TC-663,TC-937 THRU TC-1398 AND TC-1402

"END"

61-20-03
PROPELLER GOVERNOR
TC-1399 THRU TC-1607 EXCEPT TC-1402

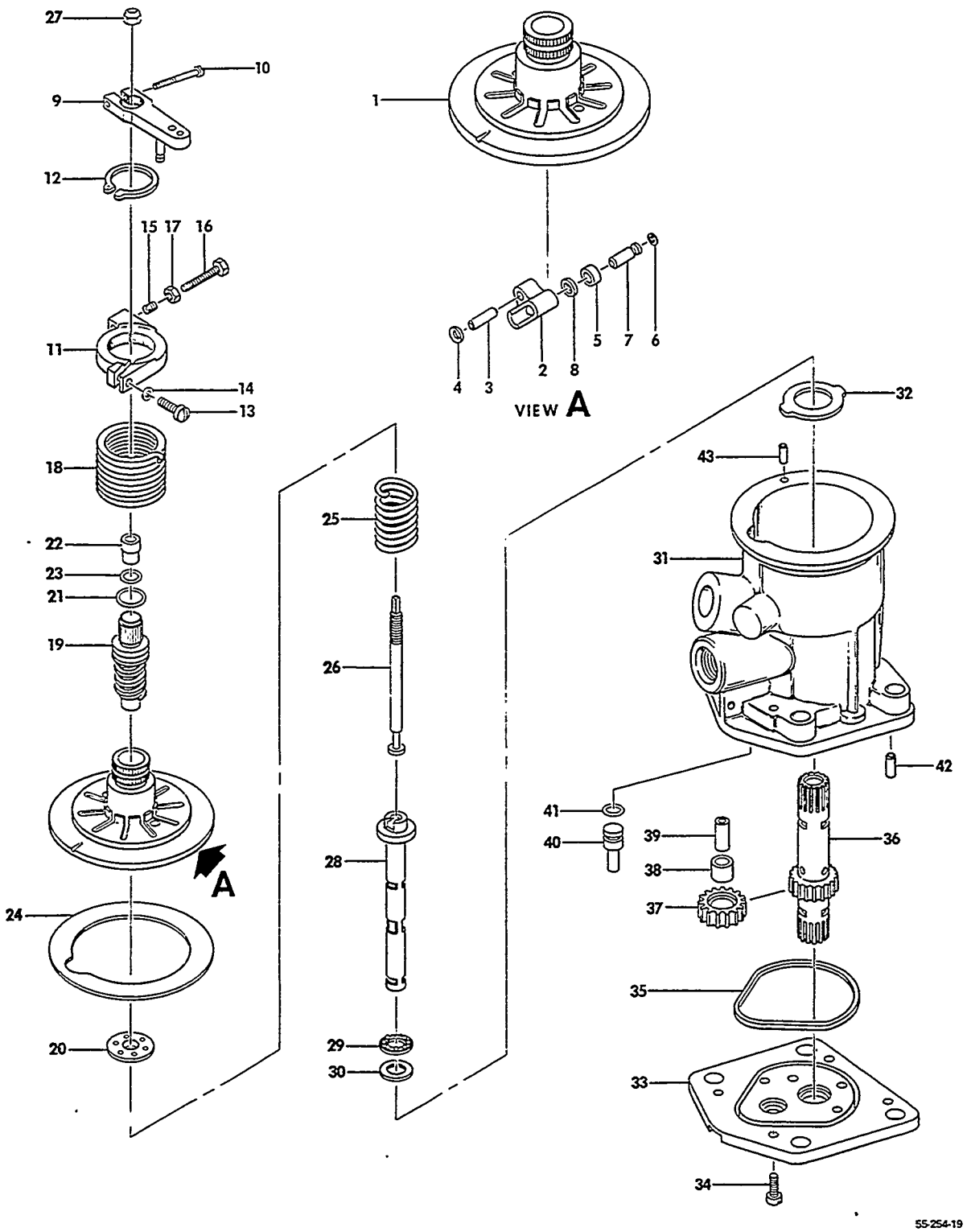

FIGURE 20-03.PROPELLER GOVERNOR
/SHEET 1 OF 2 SHEETS/

ATA CODE & INDEX NO.	PART NO.	DESCRIPTION 1 2 3 4 5 6 7	UNITS PER ASSY	USABLE ON CODE
20-03	96-380031-1	GOVERNOR,PROPELLER.	1	1
	4060-538	. COVER ASSY.	1	1
- 1	4060-540	. . COVER,GOVERNOR.	NP	1
- 2	4450-032	. . LEVER,BALLCHECK OPERATING	1	1
- 3	3159-024	. . PIN	1	1
- 4	1013-032	. . WASHER,SPRING	1	1
- 5	210242	. . ROLLER,BALLCHECK LEVER.	1	1
- 6	210277	. . RING,RETAINING.	1	1
- 7	3858-010	. . RETAINER,BEARING.	1	1
- 8	3201-048	. . SHIM.	1	1
- 9	4451-064	. LEVER ASSY,SPEED ADJUSTING.	1	1
- 10	188434	. SCREW	1	1
	188141	. WASHER.	1	1
- 11	400433	. RING ASSY,STOP.	1	1
- 12	189880	. RING,RETAINING.	1	1
- 13	190189	. SCREW	1	1
- 14	189739	. WASHER.	1	1
- 15	218077	. INSERT,THREADED	1	1
- 16	219375	. SCREW	1	1
- 17	188302	. NUT	1	1
- 18	191869	. SPRING,CONTROL LEVER RETURN	1	1
- 19	210100	. SHAFT ASSY,CONTROL.	1	1
- 20	210358	. SEAT,UPPER SPEEDER SPRING	1	1
- 21	182799	. PACKING	1	1
- 22	210034	. BUSHING,LIFT ROD.	1	1
- 23	182628	. PACKING	1	1
- 24	3053-034	. GASKET,COVER.	1	1
- 25	192749	. SPRING.	1	1
- 26	210044	. ROD,PILOT VALVE LIFT.	1	1
- 27	189522	. NUT	1	1
	186283	. WASHER.	1	1
- 28	210331	. PLUNGER ASSY,PILOT VALVE.	1	1
- 29	180231	. BEARING	1	1
- 30	210216	. RACE,BEARING.	1	1
- 31	4030-063	. BODY,GOVERNOR	1	1
- 32	3888-016	. PLATE,HEAD BEARING.	1	1
- 33	213214	. BASE.	1	1
- 34	218036	. SCREW	2	1
- 35	206336	. RING,OIL SEAL	1	1
- 36	210206	. GEAR,PUMP DRIVE	1	1
- 37	204864	. GEAR,PUMP IDLER	1	1
- 38	210036	. BEARING,NEEDLE.	1	1
- 39	210031	. STUD,IDLER GEAR	1	1
- 40	3331-042	. PLUG.	1	1
- 41	182649	. PACKING	1	1
- 42	208108	. PIN,DOWEL	2	1
- 43	1004-408	. PIN	1	1

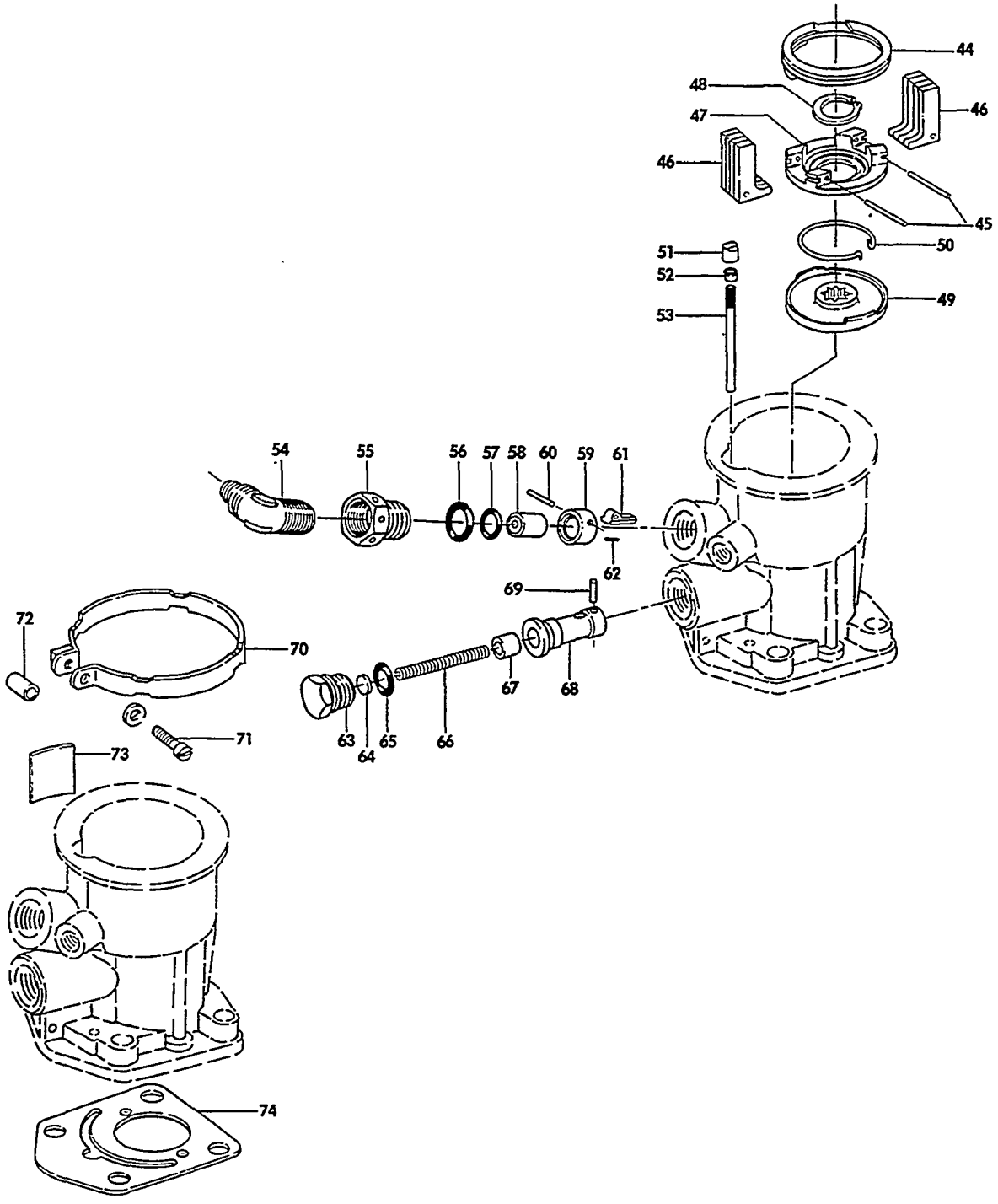

FIGURE 20-03.PROPELLER GOVERNOR
/SHEET 2 OF 2 SHEETS/

ATA CODE & INDEX NO.	PART NO.	DESCRIPTION 1 2 3 4 5 6 7	UNITS PER ASSY	USABLE ON CODE
20-03 - 44	192103	. RING,RETAINING.	1	1
- 45	210112	. PIN,FLYWEIGHT	2	1
- 46	210289	. FLYWEIGHT	8	1
	213430	. HEAD ASSY,FLYWEIGHT	1	1
- 47	210316	. . HEAD,FLYWEIGHT.	1	1
- 48	189611	. . RING,RETAINING.	1	1
- 49	210317	. . DRIVER,FLYWEIGHT HEAD	1	1
- 50	192660	. . SPRING,FLYWEIGHT HEAD DRIVE	1	1
	5358-016	. ROD ASSY,PUSH	1	1
- 51	210243	. . ADJUSTER,PUSH ROD	1	1
- 52	218148	. . INSERT,THREADED	1	1
- 53	3381-036	. . ROD,LEVER ACTUATING	1	1
- 54	217475	. ELBOW/45 DEGREE/.	1	1
- 55	217582	. ADAPTER	1	1
- 56	1355-168	. PACKING	1	1
- 57	182621	. PACKING	1	1
- 58	5261-031	. VALVE ASSY,UNFEATHERING	1	1
	210276	. BRACKET ASSY,CHECK VALVE.	1	1
- 59	210237	. . BRACKET,CHECK VALVE	1	1
- 60	1419-508	. . PIN	1	1
- 61	210238	. LEVER,BALL UNSEATING.	1	1
- 62	210248	. PIN,BALL UNSEATING.	1	1
- 63	3613-033	. PLUG,RELIEF VALVE	1	1
- 64	3111-022	. SHIM.	1	1
- 65	182483	. PACKING	1	1
- 66	192884	. SPRING,RELIEF VALVE	1	1
- 67	3180-050	. PLUNGER,RELIEF VALVE.	1	1
- 68	3290-054	. SLEEVE,RELIEF VALVE	1	1
- 69	214099	. PIN	1	1
- 70	1299-104	. CLAMP,COVER	1	1
- 71	218312	. SCREW	1	1
	186234	. WASHER.	1	1
- 72	3951-014	. SPACER.	1	1
- 73	3082-145	. NAMEPLATE,GOVERNOR.	1	1
- 74	209217	. GASKET,GOVERNOR MOUNTING.	1	1

CODES OF EFFECTIVITY

1 TC-1399 THRU TC-1607
EXCEPT TC-1402

"END"

61-22-01
PROPELLER GOVERNOR
TE-1 THRU TE-851

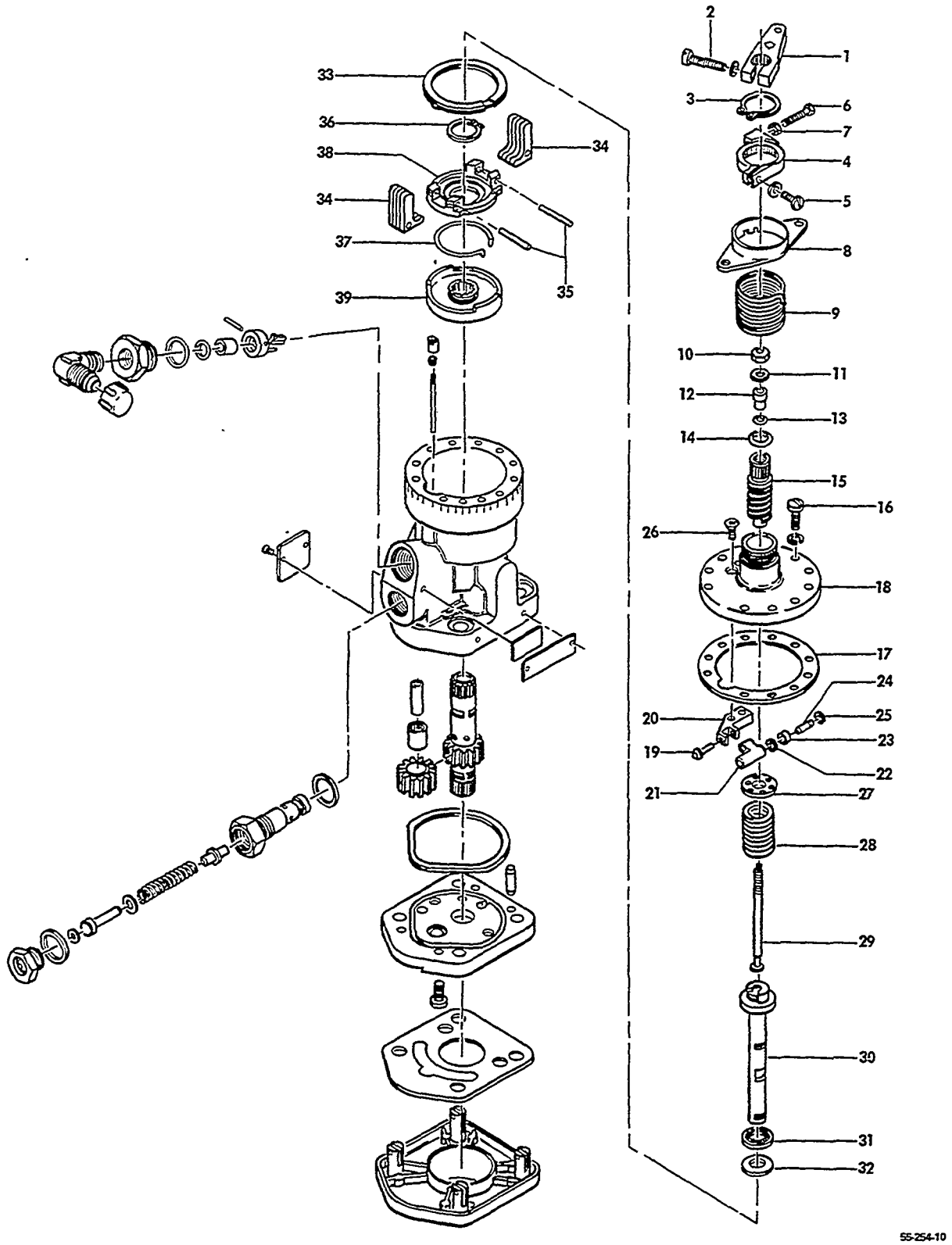

FIGURE 22-01.PROPELLER GOVERNOR
/SHEET 1 OF 2 SHEETS/

ATA CODE & INDEX NO.	PART NO.	DESCRIPTION 1 2 3 4 5 6 7	UNITS PER ASSY	USABLE ON CODE
22-01	96-380030	GOVERNOR ASSY,PROPELLER	1	1
- 1	4451-076	. LEVER,CONTROL	1	1
	219414	. RING CONTROL LEVER RETAINER	1	1
- 2	188434	. SCREW	1	1
	188141	. WASHER	1	1
- 3	189880	. RING,RETAINER	1	1
- 4	400433	. RING,STOP	1	1
- 5	190189	. SCREW	1	1
	189739	. WASHER	7	1
- 6	219375	. SCREW	1	1
- 7	188302	. NUT	1	1
- 8	210035	. RETAINER SPRING	1	1
- 9	191869	. SPRING,CONTROL LEVER	1	1
- 10	189522	. NUT	1	1
- 11	186283	. WASHER	1	1
- 12	210034	. BUSHING	1	1
- 13	182194	. O RING	1	1
- 14	182684	. O RING	1	1
- 15	210100	. SHAFT,SPEED ADJUST	1	1
- 16	189529	. SCREW	6	1
- 17	206595	. GASKET	1	1
	4060-523	. COVER ASSY	1	1
- 18	210347	. . COVER	1	1
- 19	210253	. . PIN	1	1
- 20	210322	. . BLOCK	1	1
- 21	210236	. . LEVER	1	1
- 22	186455	. . SHIM	AR	1
- 23	210242	. . ROLLER	1	1
- 24	210244	. . PIN	1	1
- 25	210277	. . RING,RETAINING	1	1
- 26	218993	. . SCREW	1	1
- 27	210358	. SEAT,SPRING	1	1
- 28	192749	. SPRING	1	1
- 29	210044	. ROD,LIFT	1	1
- 30	210331	. PLUNGER	1	1
- 31	180231	. BEARING	1	1
- 32	210216	. RACE,BEARING	1	1
- 33	192103	. RING,SPIROLOX	1	1
- 34	210289	. FLYWEIGHT	1	1
- 35	210112	. PIN,PIVOT	2	1
	210314	. HEAD ASSY,FLYWEIGHT	1	1
- 36	189611	. . RING,RETAINER	1	1
- 37	192662	. . SPRING,DRIVE	1	1
- 38	210316	. . HEAD,FLYWEIGHT	1	1
- 39	210317	. . DRIVER	1	1

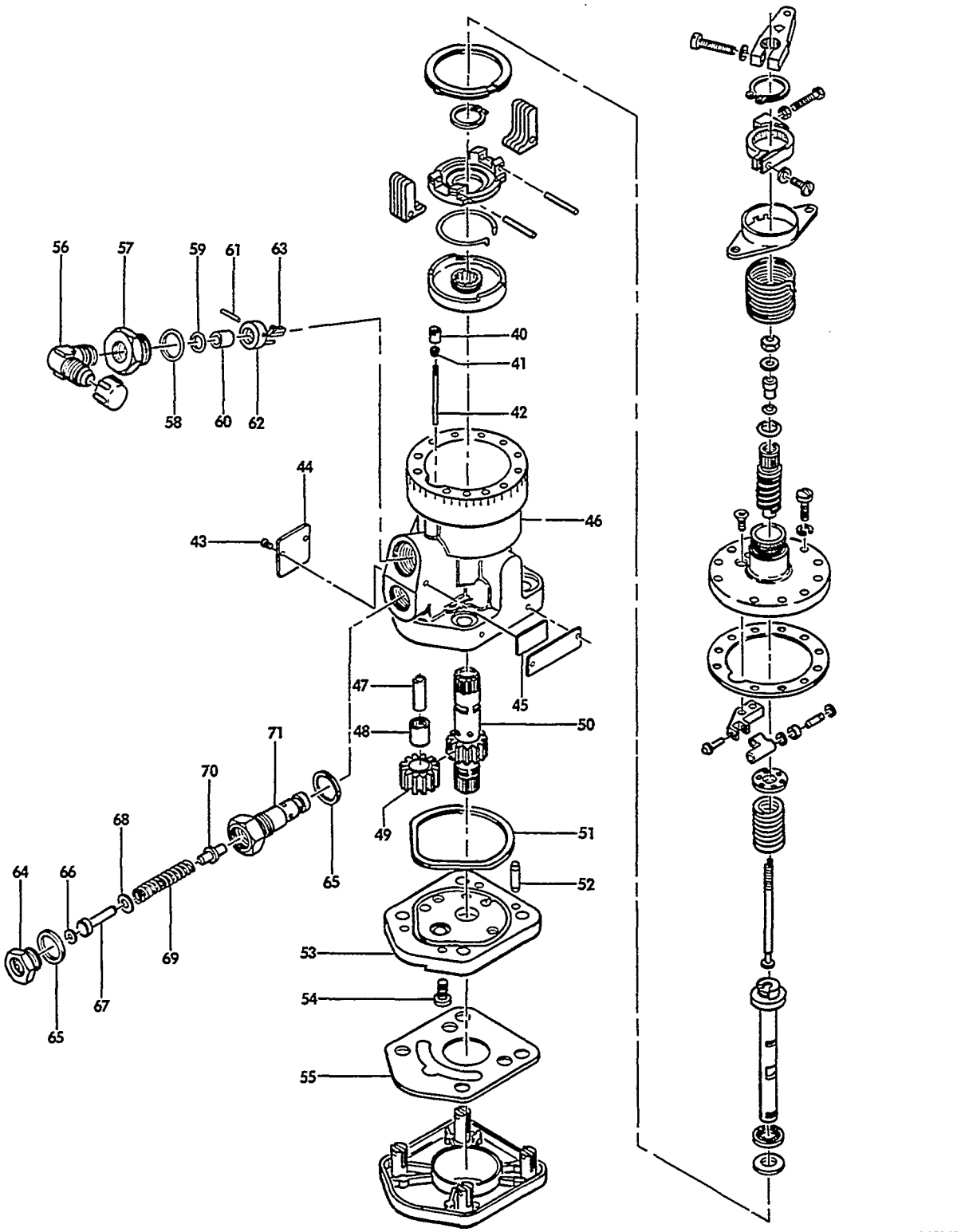

FIGURE 22-01.PROPELLER GOVERNOR
/SHEET 2 OF 2 SHEETS/

ATA CODE & INDEX NO.	PART NO.	DESCRIPTION 1 2 3 4 5 6 7	UNITS PER ASSY	USABLE ON CODE
22-01	210297	PUSHROD ASSY.	1	1
- 40	210243	ADJUSTER.	1	1
- 41	218148	INSERT.	1	1
- 42	210241	PUSHROD	1	1
- 43	189574	SCREW	2	1
- 44	223423	NAMEPLATE	1	1
- 45	223003	DECAL,DATE.	1	1
- 46	210239	BODY,GOVERNOR	1	1
- 47	210031	STUD.	1	1
- 48	210036	BEARING	1	1
- 49	204864	GEAR,IDLER.	1	1
- 50	210206	GEAR,DRIVE.	1	1
- 51	206336	SEAL,OIL.	1	1
- 52	184793	PIN,DOWEL	1	1
- 53	213214	BASE,GOVERNOR	1	1
- 54	218036	SCREW	2	1
- 55	209217	GASKET.	1	1
- 56	1253-324	ELBOW	1	1
- 57	3618-026	ADAPTER	1	1
- 58	1355-168	O RING.	1	1
- 59	182621	O RING.	1	1
- 60	5261-036	VALVE	1	1
- 61	210248	PIN	1	1
- 62	210276	BRACKET	1	1
- 63	210238	LEVER	1	1
- 64	3618-024	PLUG.	1	1
- 65	186320	GASKET.	2	1
- 66	186321	SHIM/MAXIMUM OF 4/.	AR	1
- 67	210077	STOP.	1	1
- 68	186446	SPACER.	1	1
- 69	192370	SPRING.	1	1
- 70	210078	PLUNGER	1	1
- 71	210071	BODY,VALVE.	1	1

NOTE 96-380030-1 MAY BE USED AS A SPARES REPLACEMENT FOR THE 96-380030,ONLY IF BOTH GOVERNORS ARE REPLACED.

CODES OF EFFECTIVITY

1 TE-1 THRU TE-851

"END"

61-22-02
PROPELLER GOVERNOR
TE-852 THRU TE-942 EXCEPT TE-938

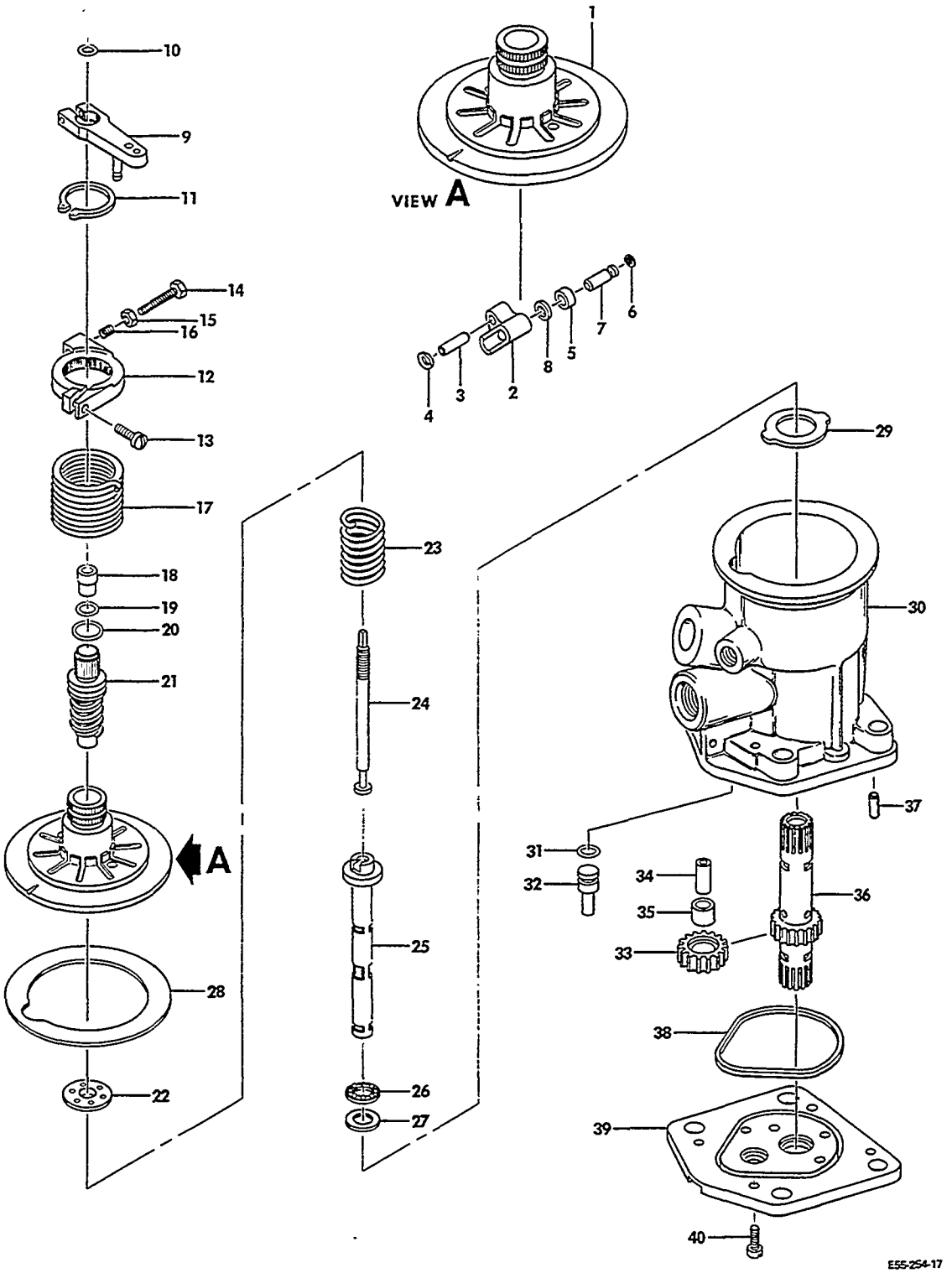

FIGURE 22-02.PROPELLER GOVERNOR
/SHEET 1 OF 2 SHEETS/

ATA CODE & INDEX NO.	PART NO.	DESCRIPTION 1 2 3 4 5 6 7	UNITS PER ASSY	USABLE ON CODE
22-02	96-380030-1	GOVERNOR,PROPELLER.	1	1
	4060-538	. COVER ASSY,GOVERNOR	1	1
- 1	4060-540	. . COVER,GOVERNOR.	1	1
- 2	4050-032	. . LEVER,BALLCHECK OPERATING	1	1
- 3	3159-024	. . PIN,STRAIGHT.	1	1
- 4	1013-032	. . WASHER,SPRING	1	1
- 5	210242	. . ROLLER,BALLCHECK LEVER.	1	1
- 6	210277	. . RING,RETAINING.	1	1
- 7	210244	. . PIN,BALLCHECK OPERATING LEVER	1	1
- 8	3201-048	. . SHIM,LAMINATED.	1	1
- 9	213419	. LEVER ASSY,SPEED ADJUSTING.	1	1
	188434	. SCREW	1	1
	188141	. WASHER.	1	1
- 10	189522	. NUT	1	1
	186283	. WASHER.	1	1
- 11	189880	. RING,RETAINING.	1	1
- 12	400433	. RING ASSY,STOP.	1	1
- 13	190189	. SCREW	1	1
	189739	. WASHER.	1	1
- 14	219375	. SCREW	1	1
- 15	188302	. NUT	1	1
- 16	218077	. INSERT,THREADED	1	1
- 17	191869	. SPRING,CONTROL LEVER RETURN	1	1
- 18	210034	. BUSHING,LIFT ROD.	1	1
- 19	182628	. PACKING,PREFORMED	1	1
- 20	182799	. PACKING,PREFORMED	1	1
- 21	210100	. SHAFT ASSY,CONTROL.	1	1
- 22	210358	. SEAT,UPPER SPEEDER RING	1	1
- 23	192749	. SPRING.	1	1
- 24	210044	. ROD,PILOT VALVE LIFT.	1	1
- 25	210331	. PLUNGER ASSY,PILOT VALVE.	1	1
- 26	180231	. BEARING	1	1
- 27	210216	. RACE,BEARING.	1	1
- 28	3053-034	. GASKET,COVER ASSY	1	1
- 29	3888-016	. PLATE,HEAD BEARING.	1	1
- 30	4030-063	. BODY,GOVERNOR	1	1
- 31	182649	. PACKING,PREFORMED	1	1
- 32	3331-042	. PLUG.	1	1
- 33	204864	. GEAR,PUMP IDLER	1	1
- 34	210031	. STUD,IDLER GEAR	1	1
- 35	210036	. BEARING,IDLER GEAR.	1	1
- 36	210206	. GEAR,PUMP DRIVE	1	1
- 37	208108	. PIN,DOWEL	2	1
- 38	206336	. SEAL;OIL.	1	1
- 39	213214	. BASE,GOVERNOR	1	1
- 40	218036	. SCREW	2	1

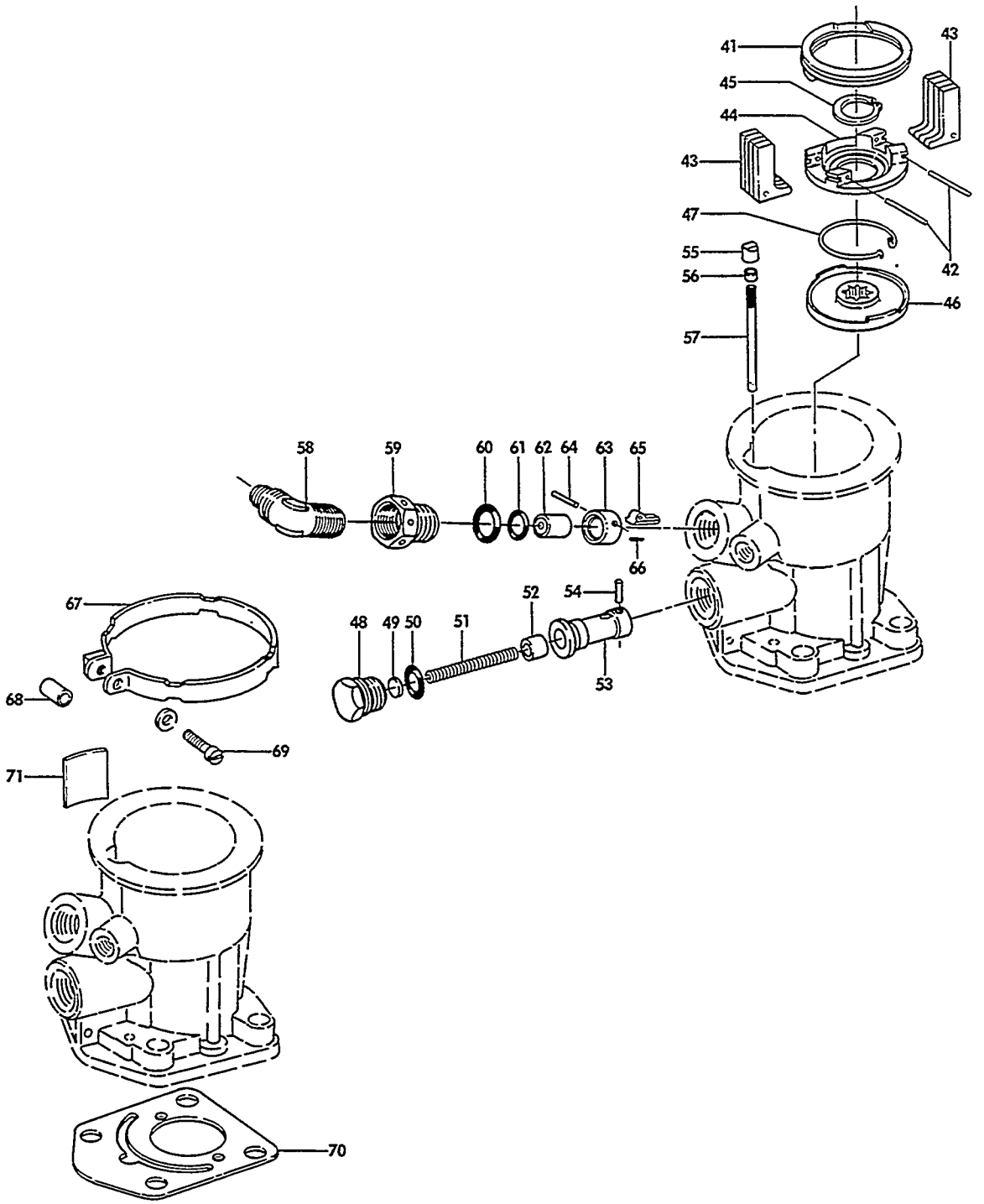

FIGURE 22-02.PROPELLER GOVERNOR
/SHEET 2 OF 2 SHEETS/

ATA CODE & INDEX NO.	PART NO.	DESCRIPTION 1 2 3 4 5 6 7	UNITS PER ASSY	USABLE ON CODE
22-02 - 41	192103	. RING,RETAINING.	1	1
- 42	210112	. PIN,FLYWEIGHT	1	1
- 43	210289	. FLYWEIGHT	8	1
	210314	. HEAD ASSY,FLYWEIGHT	1	1
- 44	210316	. . HEAD,FLYWEIGHT.	1	1
- 45	189611	. . RING,RETAINING.	1	1
- 46	210317	. . DRIVER,FLYWEIGHT HEAD	1	1
- 47	192662	. . SPRING.	1	1
- 48	3613-033	. PLUG,RELIEF VALVE	1	1
- 49	3111-022	. SHIM.	1	1
- 50	182483	. PACKING,PREFORMED	1	1
- 51	192558	. SPRING,RELIEF VALVE	1	1
- 52	3180-050	. PLUNGER,RELIEF VALVE.	1	1
- 53	3290-054	. SLEEVE,RELIEF VALVE	1	1
- 54	214099	. PIN	1	1
	5358-016	. ROD ASSY,PUSH	1	1
	210246	. . ADJUSTER ASSY,PUSH ROD.	1	1
- 55	210243	. . . ADJUSTER,PUSH ROD	1	1
- 56	218148	. . . INSERT,THREADED	1	1
- 57	3381-036	. . ROD,LEVER ACTUATING	1	1
- 58	1253-324	. ELBOW/90 DEGREE/.	1	1
- 59	3618-026	. ADAPTER	1	1
- 60	1355-168	. PACKING,PREFORMED	1	1
- 61	182621	. PACKING,PREFORMED	1	1
- 62	5261-031	. VALVE ASSY,UNFEATHERING	1	1
	210276	. BRACKET ASSY,CHECK VALVE.	1	1
- 63	210273	. . BRACKET,CHECK VALVE	1	1
- 64	210248	. . PIN,BRACKET	1	1
- 65	210238	. LEVER,BALL UNSEATING.	1	1
- 66	210248	. PIN,BALL UNSEATING.	1	1
- 67	1299-104	. CLAMP,COVER	1	1
- 68	3951-014	. SPACER.	1	1
- 69	218312	. SCREW	1	1
	186234	. WASHER.	1	1
- 70	209217	. GASKET.	1	1
- 71	3082-145	. NAMEPLATE,GOVERNOR.	1	1

CODES OF EFFECTIVITY

1 TE-852 THRU TE-942
EXCEPT TE-938

"END"

61-24-01
PROPELLER ACCUMULATOR

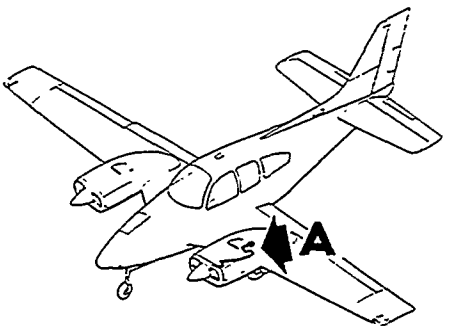

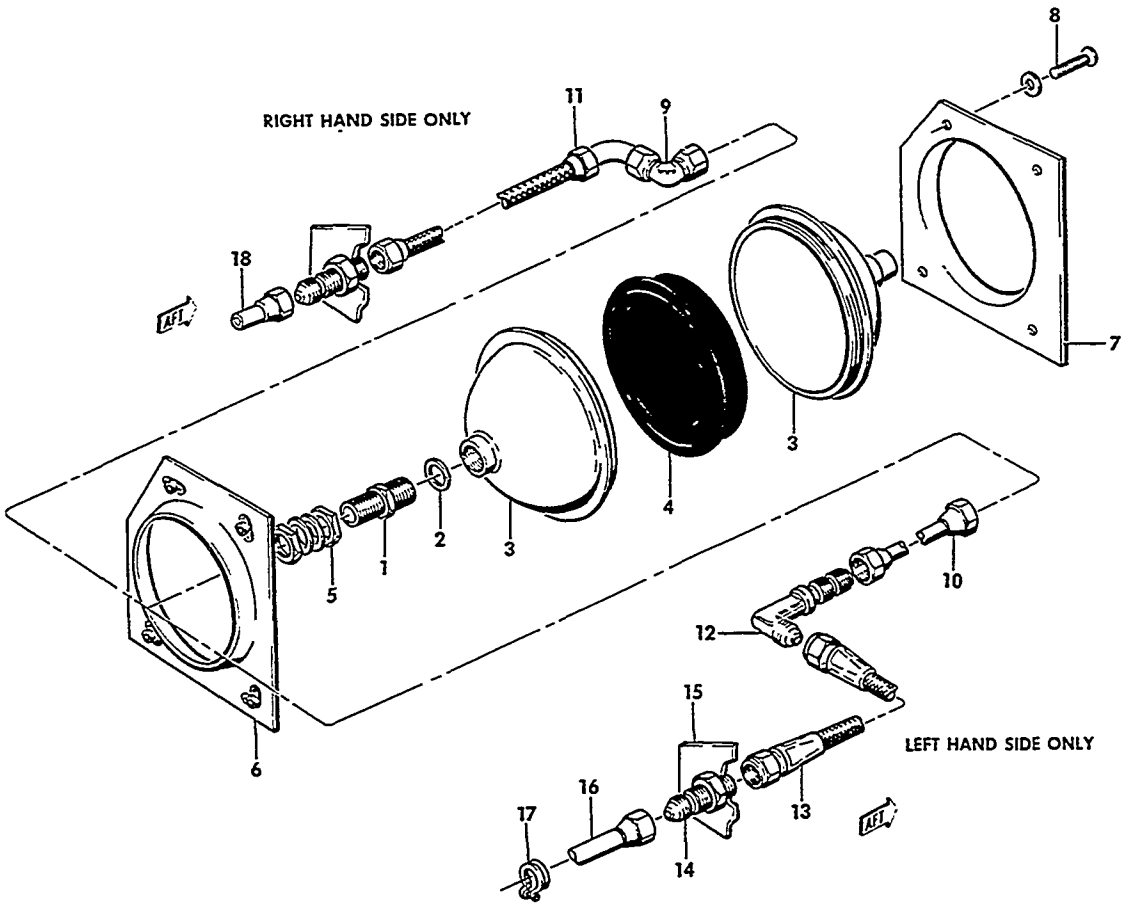

VIEW A

55-2564

FIGURE 24-01. PROPELLER ACCUMULATOR

SUB-SECT UNIT & ITEM NO.	PART NO.	DESCRIPTION 1 2 3 4 5 6 7	UNITS PER ASSY	USABLE ON CODE
24-01	96-960011	ACCUMULATOR INSTL,PROP GOVERNOR	NP	1
	96-960011-13	ACCUMULATOR INSTL,PROP GOVERNOR	NP	2
- 1	96-960011-5	REDUCER /RH AND LH/	2	
- 2	AN6290-8	GASKET/LH AND RH/	2	
- 3	95-380026	ACCUMULATOR,PROPELLER GOVERNOR/LH AND RH/	2	
- 4	203-01-10	DIAPHRAGM,ACCUMULATOR/LH AND RH/	1	
- 5	AN924-6	NUT/LH AND RH/	4	
	AN970-9	WASHER/LH AND RH/	4	
- 6	96-980001-35	FORMER,LH NACELLE	1	
	96-980001-36	FORMER,RH NACELLE	1	
- 7	96-960011-3	SUPPORT,LH ACCUMULATOR	1	
	96-960011-4	SUPPORT,RH ACCUMULATOR	1	
		/ATTACHING PARTS/		
- 8	AN3A	BOLT	4	
	AN960-10	WASHER	4	
		*		
- 9	6C6BX-S	NUT,SWIVEL/RH/	1	2
- 10	96-960011-7	TUBE ASSY,ACCUMULATOR/LH/	1	1
	96-960011-17	TUBE ASSY,ACCUMULATOR/LH/	1	2
- 11	R 330995F6-0315	HOSE ASSY/RH/SUPERSEDES MS28741F6-0315/	1	1
	330997F6-0270	HOSE ASSY/RH/	1	2
- 12	AN837-6D	ELBOW/LH/	1	1
	AN833-6D	ELBOW/LH/	3	2
		/ATTACHING PARTS/		
	AN824-6D	NUT	3	
	AN960-916	WASHER	3	
		*		
- 13	330995F6-0315	HOSE ASSY/LH/	1	1
	330995F6-0260	HOSE ASSY/LH/	1	2
		/ATTACHING PARTS/		
	MS21919DG16	CLAMP	2	
	AN742-16	CLAMP	2	
	MS35207-263	SCREW	2	
	AN960-10	WASHER	AR	
	MS21044N3	NUT	2	
		*		
- 14	AN832-6D	FITTING/LH AND RH/	2	2
	AN833-6D	ELBOW/LH AND RH/	2	1
		/ATTACHING PARTS/		
	AN960-916	WASHER	3	
	AN924-6D	NUT	3	
		*		
- 15	96-940022	BRACKET/LH AND RH/	1	2
	96-940020-1	BRACKET/LH AND RH/	1	1
- 16	96-960011-15	TUBE ASSY/LH AND RH/	2	2
		/ATTACHING PARTS/		
- 17	MS21919DG6	CLAMP	2	
	MS21919DG17	CLAMP	2	
	AN525-10R6	SCREW	2	
	AN960-10	WASHER	AR	
	AN960-10	NUT	2	
		*		
- 18	96-960011-11	TUBE ASSY/LH AND RH/	2	1

CODES OF EFFECTIVITY

1 TC-1 THRU TC-1607 EXCEPT TC-350

2 TC-350 AND TE-1 THRU TE-942 EXCEPT TE-938

"END"

CHAPTER

71

POWERPLANT

LIST OF PAGES & TABLE OF CONTENTS
FOR
CHAPTER 71-00-00 POWER PLANT

CHAP/SUB-SECT & UNIT	PAGE NO.	EFFECTIVE DATE	TABLE OF CONTENTS
71-00-00	1	04/05/85	LIST OF PAGES & TABLE OF CONTENTS
71-00-00	2	04/05/85	
71-00-01	1	03/10/78	POWER PLANT INSTALLATION
71-00-01	2	03/10/78	TC-1 THRU TC-501
71-00-01	3	03/10/78	
71-00-01	4	03/10/78	
71-00-01	5	03/10/78	
71-00-01	6	03/10/78	
71-00-01	7	03/10/78	
71-00-01	8	03/10/78	
71-00-01	9	04/05/85	
71-00-02	1	03/10/78	POWER PLANT INSTALLATION
71-00-02	2	03/10/78	TC-502 THRU TC-1254
71-00-02	3	03/10/78	
71-00-02	4	03/10/78	
71-00-02	5	04/05/85	
71-00-02	6	03/10/78	
71-00-02	7	03/10/78	
71-00-02	8	03/10/78	
71-00-02	9	03/10/78	
71-00-02	10	03/10/78	
71-00-02	11	03/10/78	
71-00-03	1	03/10/78	POWER PLANT INSTALLATION
71-00-03	2	03/10/78	TC-1255 THRU TC-1607
71-00-03	3	03/10/78	
71-00-03	4	03/10/78	
71-00-03	5	03/10/78	
71-00-03	6	03/10/78	
71-00-03	7	03/10/78	
71-00-03	8	03/10/78	
71-00-03	9	03/10/78	
71-00-03	10	03/10/78	
71-00-03	11	04/05/85	
71-02-01	1	03/10/78	POWER PLANT
71-02-01	2	03/10/78	TE-1 THRU TE-849
71-02-01	3	04/05/85	
71-02-01	4	03/10/78	
71-02-01	5	03/10/78	
71-02-01	6	03/10/78	
71-02-01	7	03/10/78	
71-02-01	8	03/10/78	
71-02-01	9	03/10/78	
71-02-01	10	03/10/78	
71-02-01	11	04/05/85	
71-02-01	12	03/10/78	
71-02-01	13	03/10/78	
71-02-01	14	03/10/78	
71-02-01	15	03/10/78	
71-02-02	1	03/10/78	POWER PLANT
71-02-02	2	03/10/78	TE-850 THRU TE-942, EXCEPT TE-938
71-02-02	3	04/05/85	
71-02-02	4	03/10/78	
71-02-02	5	03/10/78	
71-02-02	6	03/10/78	
71-02-02	7	04/05/85	
71-02-02	8	03/10/78	
71-02-02	9	04/05/85	
71-02-02	10	03/10/78	
71-02-02	11	03/10/78	
71-02-02	12	03/10/78	
71-02-02	13	03/10/78	

LIST OF PAGES & TABLE OF CONTENTS
FOR
CHAPTER 71-00-00 POWER PLANT

CHAP/SUB-SECT & UNIT	PAGE NO.	EFFECTIVE DATE	TABLE OF CONTENTS
71-10-01	1	03/10/78	ENGINE COWLING
71-10-01	2	03/10/78	TC-1 THRU TC-1607
71-10-01	3	04/05/85	
71-10-01	4	03/10/78	
71-10-01	5	03/10/78	
71-10-01	6	03/10/78	
71-10-01	7	03/10/78	
71-10-01	8	03/10/78	
71-10-01	9	03/10/78	
71-12-01	1	03/10/78	ENGINE COWLING
71-12-01	2	03/10/78	TE-1 THRU TE-942,EXCEPT TE-938
71-12-01	3	03/10/78	
71-12-01	4	03/10/78	
71-12-01	5	04/05/85	
71-12-01	6	03/10/78	
71-12-01	7	04/05/85	
71-12-01	8	04/05/85	
71-12-01	9	04/05/85	
71-60-01	1	03/10/78	ENGINE BAFFLES
71-60-01	2	03/10/78	TC-1 THRU TC-1607
71-60-01	3	04/05/85	
71-60-01	4	03/10/78	
71-60-01	5	04/05/85	
71-60-01	6	03/10/78	
71-60-01	7	03/10/78	
71-62-01	1	03/10/78	ENGINE BAFFLES
71-62-01	2	03/10/78	TE-1 THRU TE-942,EXCEPT TE-938
71-62-01	3	03/10/78	
71-62-01	4	03/10/78	
71-62-01	5	03/10/78	
71-62-01	6	03/10/78	
71-62-01	7	03/10/78	
71-64-01	1	03/10/78	INDUCTION AIR SYSTEM
71-64-01	2	03/10/78	TC-1 THRU TC-1607
71-64-01	3	03/10/78	
71-64-01	4	03/10/78	
71-64-01	5	04/05/85	
71-66-01	1	03/10/78	INDUCTION AIR SYSTEM
71-66-01	2	03/10/78	TE-1 THRU TE-942,EXCEPT TE-938
71-66-01	3	04/05/85	
71-66-01	4	03/10/78	
71-66-01	5	03/10/78	
71-70-01	1	03/10/78	ENGINE DRAINS
71-70-01	2	03/10/78	TC-1 THRU TC-1607
71-70-01	3	03/10/78	
71-70-01	4	03/10/78	
71-70-01	5	03/10/78	
71-70-01	6	03/10/78	
71-70-01	7	03/10/78	
71-72-01	1	03/10/78	ENGINE DRAINS
71-72-01	2	03/10/78	TE-1 THRU TE-942,EXCEPT TE-938
71-72-01	3	03/10/78	
71-72-01	4	03/10/78	
71-72-01	5	03/10/78	

71-00-01
POWER PLANT INSTALLATION
TC-1 THRU TC-501

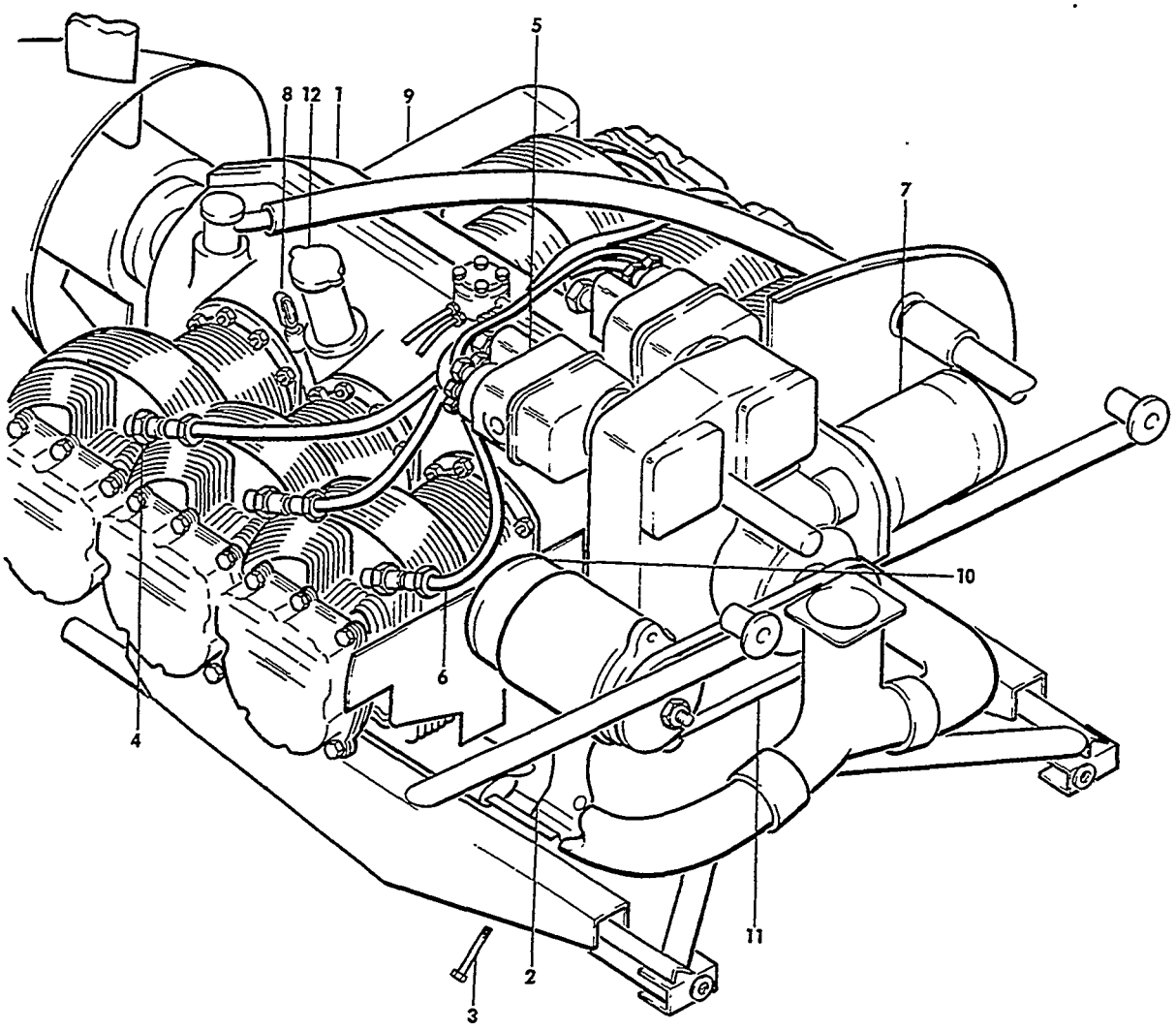

VIEW **A**

BS5-241-49

FIGURE 00-01. POWER PLANT INSTALLATION
/SHEET 1 OF 4 SHEETS/

ATA CODE & INDEX NO.	PART NO.	DESCRIPTION 1 2 3 4 5 6 7	UNITS PER ASSY	USABLE ON CODE
00-01	96-910001-1	POWER PLANT INSTL,LH/WITH GENERATOR/.	NP	1
	96-910001-2	POWER PLANT INSTL,RH/WITH GENERATOR/.	NP	1
	96-910001-89	POWER PLANT INSTL,LH/WITH GENERATOR/.	NP	2
	96-910001-90	POWER PLANT INSTL,RH/WITH GENERATOR/.	NP	2
	96-910001-601	. POWER PLANT ASSY,LH	1	3
	96-910001-602	. POWER PLANT ASSY,RH	1	3
- 1	IO-470-L	. . ENGINE ASSY	2	3
		/ATTACHING PARTS/		
	J7518-2	. . MOUNT,ENGINE SHOCK.	4	4
- 2	J9613-5	. . MOUNT,ENGINE SHOCK.	4	5
	AN7-32A	. . BOLT.	4	4
- 3	AN7-41A	. . BOLT.	4	5
	AN960-716	. . WASHER.	4	
		——+——		
- 4	RHB36W	. . . PLUG,SPARK/CHAMPION/.	12	3
	AC271	. . . PLUG,SPARK/AC/ALTERNATE FOR RHB36W/ . . .	12	3
	S6RN25	. . . MAGNETO	2	6
- 5	S6RN201	. . . MAGNETO,LH.	1	7
	S6RN205	. . . MAGNETO,RH.	1	7
		/ATTACHING PARTS/		
	535847	. . . WASHER.	4	
	AN936A516	. . . WASHER,LOCK	4	
	AN315-5R	. . . NUT	4	
		——+——		
	10-382574	. . . . BREAKER ASSY,MAGNETO.	1	6
	10-382584	. . . . BREAKER ASSY,MAGNETO.	1	7
- 6	627805	. . . HARNESS ASSY,LH MAGNETO	1	3
	627804	. . . HARNESS ASSY,RH MAGNETO	1	3
	626062-2	. . . PUMP,ENGINE DRIVEN FUEL	1	3
	1108234	. . . STARTER/SEE CHAPTER 80/	1	3
- 7	MHJ4G03	. . . STARTER/ALTERNATE FOR 1108234/.	1	3
		SUPERSEDES MHJ4002/SEE CHAPTER 80/		
- 8	629327-1	. . . DIPSTICK,LH ENGINE OIL.	1	3
	629327-2	. . . DIPSTICK,RH ENGINE OIL.	1	3
	626189	. . . COOLER,ENGINE OIL	1	8
- 9	639151	. . . COOLER,ENGINE OIL/NON-CONGEALING TYPE/. .	1	9
	1101911	. . . GENERATOR,25 AMP.	1	3
	1105053	. . . GENERATOR,40 AMP.	1	10
- 10	1105056	. . . GENERATOR,40 AMP.	1	11
	627377	. . . PULLEY/USED WITH 25 AMP GENERATOR/. . . .	1	3
	628005	. . . PULLEY/USED WITH 40 AMP GENERATOR/. . . .	1	3
	1100718	. . . ALTERNATOR,50 AMP	1	3
	1100747	. . . ALTERNATOR,50 AMP/ALTERNATE FOR 1100718/.	1	3
	634571	. . . PULLEY/USED WITH 50 AMP ALTERNATOR/ . . .	1	3
	539547-31-19	. . . BELT,ALTERNATOR DRIVE	1	3
- 11	539547-32	. . . BELT,GENERATOR DRIVE.	1	3
- 12	539291	. . . CAP AND RETAINER ASSY	1	3
	EQ5850L	. . . INJECTION SYSTEM,COMPLETE FUEL.	1	3
		/SEE CONTINENTAL ENGINE MANUAL/		
	534862	. . . SCREEN ASSY,OIL FILTER.	1	3

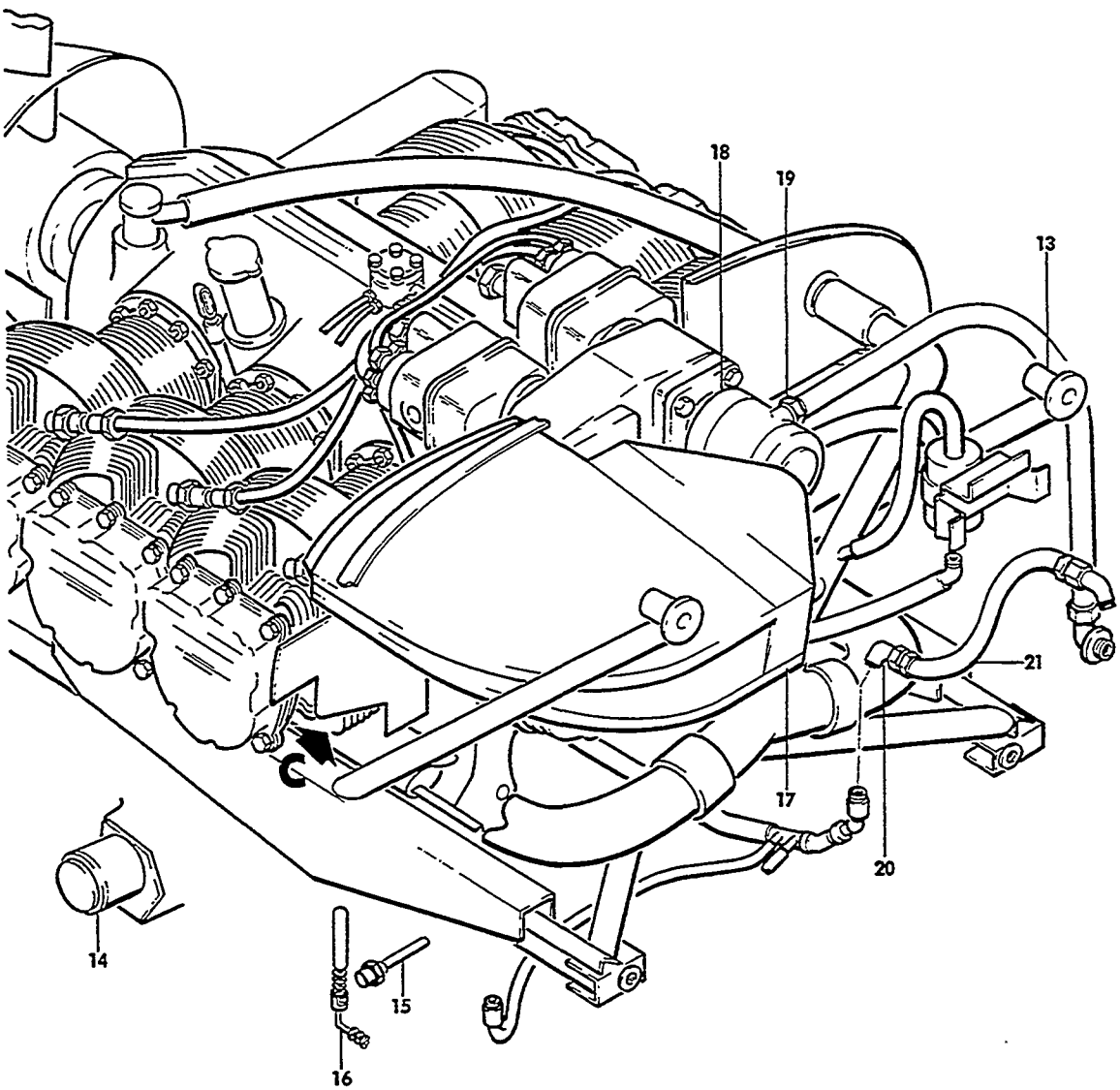

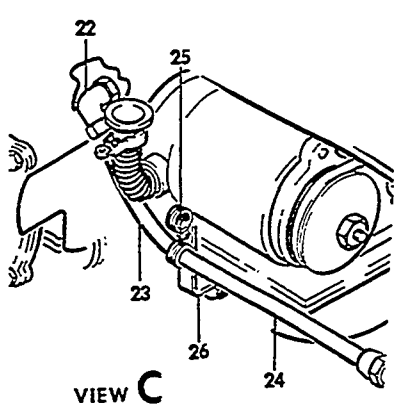

BSS-241-50

FIGURE 00-01.POWER PLANT INSTALLATION
/SHEET 2 OF 4 SHEETS/

ATA CODE & INDEX NO.	PART NO.	DESCRIPTION 1 2 3 4 5 6 7	UNITS PER ASSY	USABLE ON CODE
00-01	96-910005-55	. . MOUNT ASSY,ENGINE	1	4
- 13	96-910005-75	. . MOUNT ASSY,ENGINE	1	5
		/ATTACHING PARTS/		
	NAS146-22	. . BOLT,LOWER FITTING.	2	
	NAS146-46	. . BOLT,UPPER FITTING.	2	
	NAS143-6C	. . WASHER.	4	
	AN960-616	. . WASHER/MAXIMUM OF 12/	AR	
	EB064	. . NUT	4	
		----*----		
- 14	210355	. . GOVERNOR/SEE CHAPTER 61/.	1	3
		NOTE 96-380031-1 MAY BE USED TO REPLACE 210355 IF BOTH GOVERNORS ARE REPLACED.		
- 15	MS28034-1	. . BULB,OIL TEMPERATURE.	1	3
	AN4076-1	. . FITTING,CYLINDER HEAD TEMPERATURE BULB. . .	1	3
- 16	AN5546-1	. . BULB CYLINDER HEAD TEMPERATURE.	1	3
	96-389000	. . GENERATOR,TACHOMETER/SUPERSEDES 50-389040/.	1	3
	BJ1000AH3D0	. . PLUG,OIL SUMP DRAIN	1	3
- 17	96-919100-609	. . BOX ASSY,LH INDUCTION AIR/WITH GENERATOR/ .	1	3
	96-919100-615	. . BOX ASSY,RH INDUCTION AIR/WITH GENERATOR/ .	1	3
		/SEE 71-64-01/		
	96-919100-611	. . BOX ASSY,LH INDUCTION AIR/WITH DELCOTRON. .	1	3
		ALTERNATOR/SEE 71-64-01/		
	96-919100-613	. . BOX ASSY,RH INDUCTION AIR/WITH DELCOTRON. .	1	3
		ALTERNATOR/SEE 71-64-01/		
	118-A2	. . PUMP ASSY,VACUUM/DRY/	1	12
- 18	G455	. . PUMP ASSY,VACUUM/WET/	1	13
	AN840-8	. . ADAPTER,VACUUM PUMP HOSE.	2	14
- 19	AN840-8	. . ADAPTER,VACUUM PUMP HOSE/LOWER PORT/. . . .	1	15
	AN840-9	. . ADAPTER,VACUUM PUMP HOSE/UPPER PORT/. . . .	1	15
	50-380090	. . PUMP ASSY,VACUUM/USED WITH SURFACE DEICE. .	1	3
		OR AUTOPILOT/		
	50-380090-1	. . PUMP ASSY,VACUUM/ALTERNATE FOR 50-380090/ .	1	3
		/USED WITH SURFACE DEICE OR AUTOPILOT/		
	50-380090-2	. . PUMP ASSY,VACUUM/ALTERNATE FOR 50-380090/ .	1	3
		/USED WITH SURFACE DEICE OR AUTOPILOT/		
	AN840-10	. . ADAPTER,VACUUM PUMP HOSE.	1	3
	AN844-10	. . ELBOW	1	3
- 20	AN822-4	. . ELBOW,MANIFOLD PRESSURE	1	3
- 21	AN6270-4-10	. . HOSE ASSY,MANIFOLD PRESSURE LH.	1	3
	AN6270-4-22	. . HOSE ASSY,MANIFOLD PRESSURE RH.	1	3
	AN912-3	. . REDUCER,RESTRICTOR ASSY	1	3
- 22	45-939120	. . RESTRICTOR ASSY,OIL PRESSURE.	1	3
- 23	96-910001-33	. . TUBE ASSY,OIL PRESS/FWD/.	1	3
- 24	MS28741-4-0100	. . HOSE ASSY,LH OIL PRESS/AFT/	1	3
		/ATTACHING PARTS/		
- 25	MS21919DG8	. . CLAMP	1	
	AN3-5A	. . BOLT.	1	
		----*----		
- 26	96-910001-53	. . SUPPORT	1	3

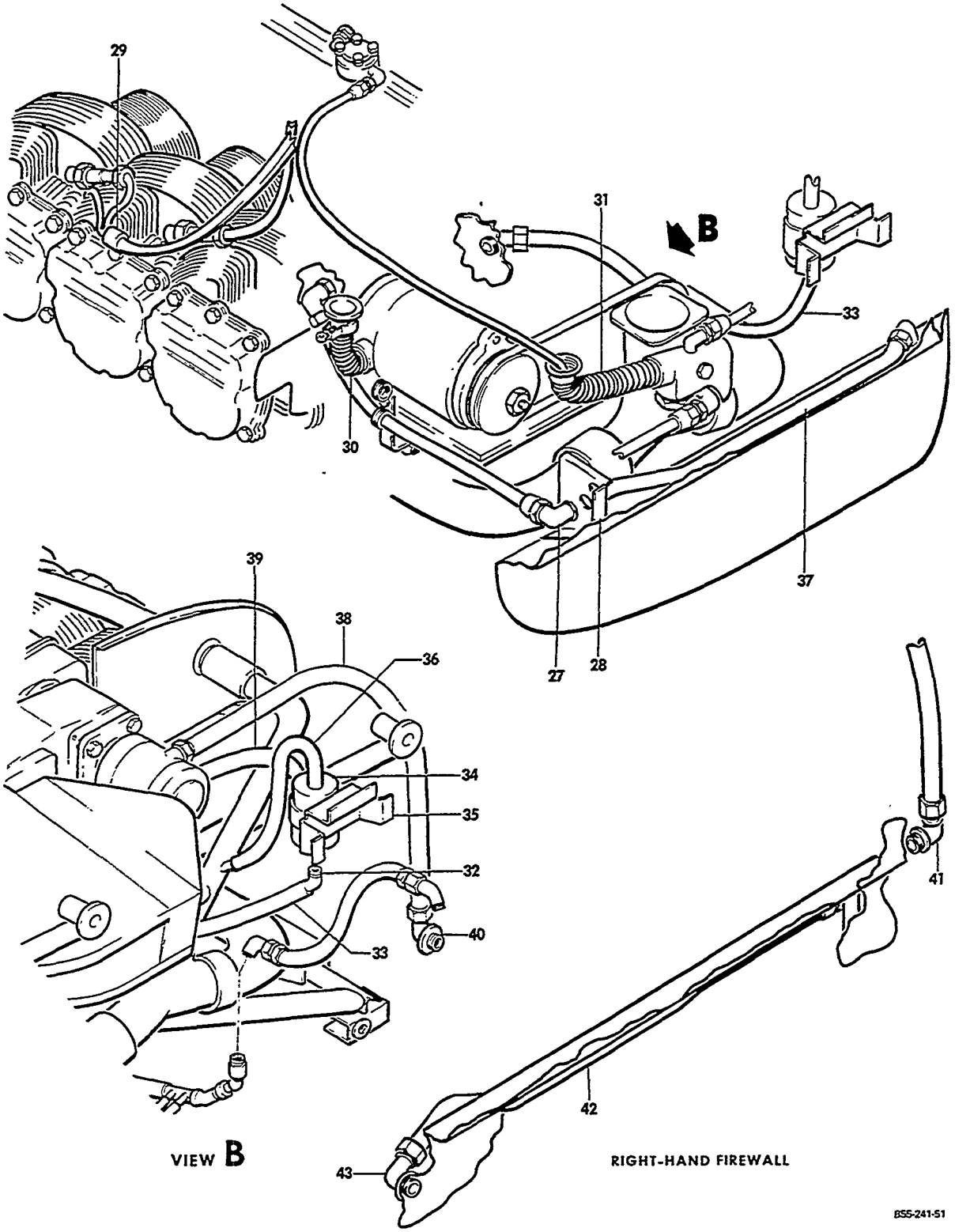

FIGURE 00-01.POWER PLANT INSTALLATION
/SHEET 3 OF 4 SHEETS/

ATA CODE & INDEX NO.	PART NO.	DESCRIPTION 1 2 3 4 5 6 7	UNITS PER ASSY	USABLE ON CODE
00-01 - 27	AN833-4D	ELBOW,OIL PRESSURE HOSE	1	3
	AN960-716	WASHER	1	3
	AN924-4D	NUT	1	3
- 28	96-910001-29	BRACKET/LH ONLY/	1	3
	96-910001-51	BRACKET,OIL AND CYLINDER HEAD TEMP WIRE	4	3
- 29	M1779	CLAMP,MAGNETO HARNESS	2	3
- 30	96-910001-57	TUBE,GENERATOR BLAST	1	3
	96-910001-145	TUBE,ALTERNATOR BLAST	1	3
	96-910001-79	CLIP,STARTER CABLE SUPPORT	1	3
	MS21919DG7	CLAMP,STARTER WIRE	1	3
		/ATTACHING PARTS/		
	AN520-10R	SCREW	1	
	MS20365-1032	NUT	1	
		*		
- 31	115167CXZ060585	DUCT,FUEL PUMP COOLING	1	3
	35-910004-7	WASHER,TUBE FLANGE SUPPORT	1	3
		/ATTACHING PARTS/		
	AN520-10R	SCREW	4	
	AN960-8	WASHER	4	
	MS20365-832	NUT	4	
		*		
- 32	AN844-4	ELBOW,OIL SEPARATOR	1	3
- 33	106200FR4-94	HOSE,OIL RETURN	1	3
- 34	HE642	SEPARATOR,OIL/SUPERSEDES G4026/	1	3
		/ATTACHING PARTS/		
	AN520-10R	SCREW	2	
	AN960-10	WASHER	2	
	MS20365-1032	NUT	2	
		*		
- 35	95-910001-43	BRACKET,OIL SEPARATOR MOUNTING	1	3
- 36	106200FR8-52	HOSE,OIL SEPARATOR AIR OUTLET	1	3
- 37	96-910001-31	TUBE ASSY,OIL PRESSURE/LH ONLY/	1	3
- 38	106200FR8-74	HOSE VACUUM/LH/	1	13
	106200FR8-44	HOSE,VACUUM/LH/	1	12
	106200FR8-52	HOSE,VACUUM/RH/	1	12
	106200FR8-60	HOSE ASSY/RH/	1	13
- 39	106200FR8-44	HOSE,VACUUM PUMP AIR DISCHARGE	1	3
	96-910001-25	VALVE ASSY,INSTRUMENT VACUUM RELIEF	1	16
	96-910001-21	TUBE ASSY,VACUUM/LH/	1	12
	96-910001-23	TUBE ASSY,VACUUM/LH/	1	12
- 40	AN822-8D	ELBOW/LH/	1	3
	AN912-4D	BUSHING/LH/	1	3
- 41	AN838-8D	ELBOW/RH/	1	3
	AN924-8D	NUT	1	3
- 42	MS28741-8-0201	HOSE ASSY/LH/	1	3
	MS28741-8-0385	HOSE ASSY	1	3
- 43	AN822-8D	ELBOW/RH/	1	3
	AN912-4D	REDUCER/RH/	1	3
	34810A	RELAY,STARTER	1	17
	6041H190	RELAY,STARTER	1	18
		/ATTACHING PARTS/		
	AN4-4A	BOLT	2	
	AN936B416	WASHER	2	
	MS20365-428	NUT	2	
		*		

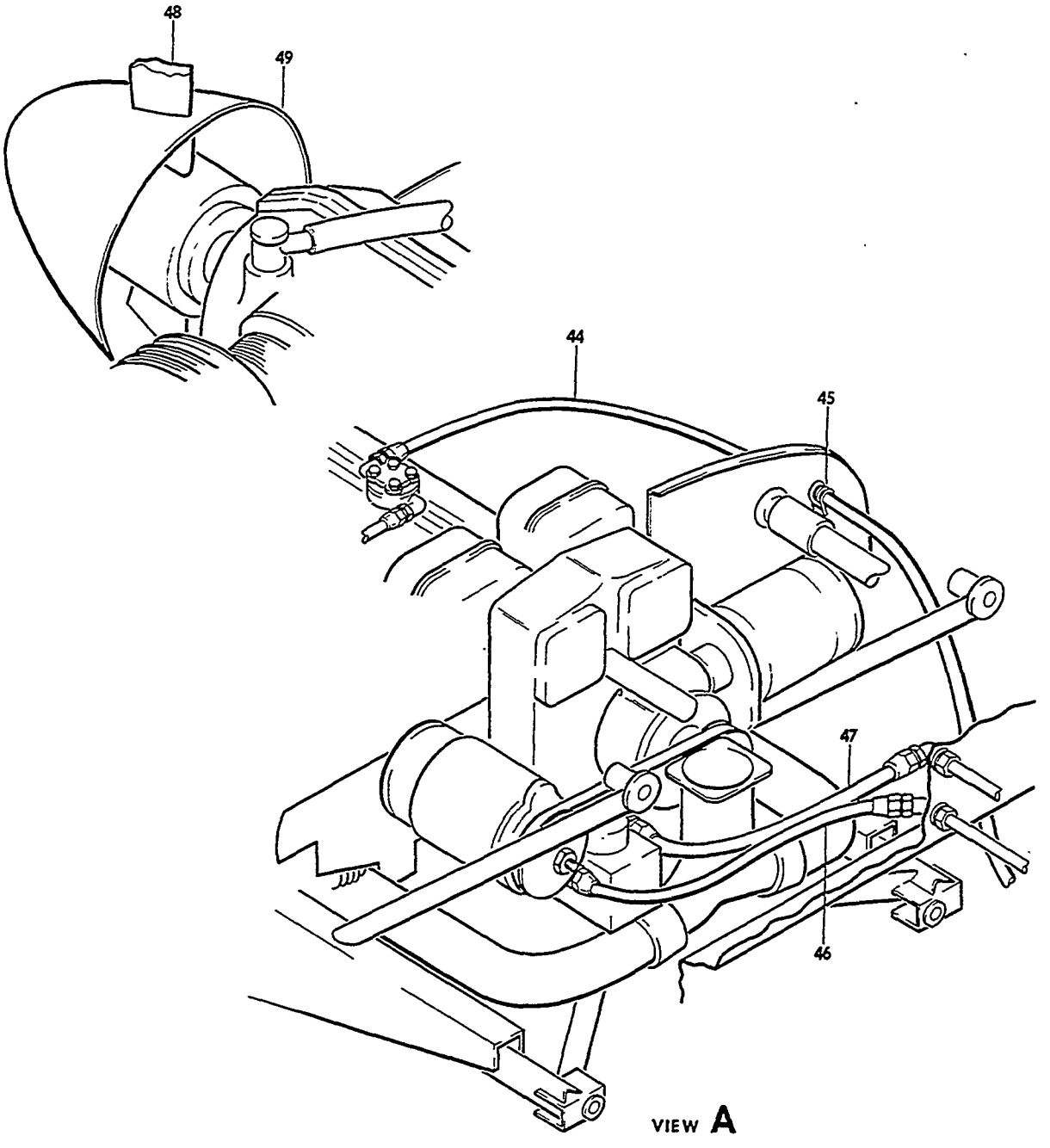

FIGURE 00-01.POWER PLANT INSTALLATION
/SHEET 4 OF 4 SHEETS/

SUB-SECT UNIT & ITEM NO.	PART NO.	DESCRIPTION 1 2 3 4 5 6 7	UNITS PER ASSY	USABLE ON CODE
00-01	1118976	. . REGULATOR,VOLTAGE/25 AMP GENERATOR/	1	3
	1119237C	. . REGULATOR,VOLTAGE/40 AMP GENERATOR/	1	3
	1116902	. . RELAY,PARALLELING/WITH GENERATOR/	1	3
- 44	MS28741-4-0200	. . HOSE ASSY,FUEL PRESSURE/LH AND RH/.	1	3
- 45	AN837-4	. . FITTING/LH AND RH/.	1	3
	AN924-4	. . NUT	1	3
	MS28741-6-0230	. . HOSE ASSY	1	21
	MS28741-6-0140	. . HOSE ASSY/RH/	1	21
- 46	MS28741-6-0184	. . HOSE ASSY/LH AND RH/.	1	22
R	MS28741-4-0250	. . HOSE ASSY/LH/	1	21
	MS28741-4-0234	. . HOSE ASSY/RH/	1	21
- 47	MS28741-4-0222	. . HOSE ASSY/LH AND RH/.	1	22
	2AF36C39P78BFM0	. PROPELLER ASSY,2 BLADE.	1	19
- 48	2AF34C5578FF0	. PROPELLER ASSY,2 BLADE. . . . . /SEE S.I. 0021-248,-249,REV I./	1	20
		NOTE FOR PROPELLER BREAKDOWN SEE CHAPTER 61.		
	96-960006-603	. PROPELLER ASSY/2 BLADE/ANTI-ICE EQUIPPED/ . . /SEE CHAPTER 30/	1	19
	96-960006-604	. PROPELLER ASSY/2 BLADE/ANTI-ICE EQUIPPED/ . . /SEE CHAPTER 30/	1	20
	96-910001-65	. SPINNER ASSY/2 BLADE PROP/WITH GENERATOR/ . .	1	19
- 49	96-910001-123	. SPINNER ASSY/2 BLADE PROP/WITH GENERATOR/ . .	1	20
	96-960006-18	. SPINNER ASSY/2 BLADE PROP/WITH ANTI-ICE/. . .	1	19
	96-960006-29	. SPINNER ASSY/2 BLADE PROP/WITH ANTI-ICE/. . .	1	20
		NOTE FOR ENGINE EXHAUST SYSTEM SEE CHAPTER 78.		

CODES OF EFFECTIVITY

1	TC-1 THRU TC-472 EXCEPT TC-371	2	TC-371,TC-473 THRU TC-501
3	TC-1 THRU TC-501	4	TC-1 THRU TC-175 EXCEPT TC-36,TC-38 TC-42,TC-96,TC-113 AND TC-168
5	TC-36,TC-38,TC-42 TC-96,TC-113,TC-168 AND TC-176 THRU TC-501	6	TC-2 THRU TC-23
7	TC-1,TC-24 THRU TC-501	8	TC-1 THRU TC-280
9	TC-281 THRU TC-501	10	TC-1 THRU TC-154
11	TC-155 THRU TC-501	12	TC-4,TC-6 THRU TC-13,TC-16,TC-17
13	TC-1 THRU TC-501 EXCEPT TC-4,TC-6 THRU TC-13,TC-16 AND TC-17	14	TC-1 THRU TC-154
15	TC-155 THRU TC-501	16	TC-1 THRU TC-190
17	TC-1 THRU TC-493	18	TC-494 THRU TC-501
19	TC-1 THRU TC-472 EXCEPT TC-371 AND TC-408	20	TC-371,TC-408,TC-473 THRU TC-501
21	TC-1 THRU TC-420 EXCEPT TC-251	22	TC-251,TC-421 THRU TC-501 EXCEPT TC-350

"END"

71-00-02
POWER PLANT INSTALLATION
TC-502 THRU TC-1254

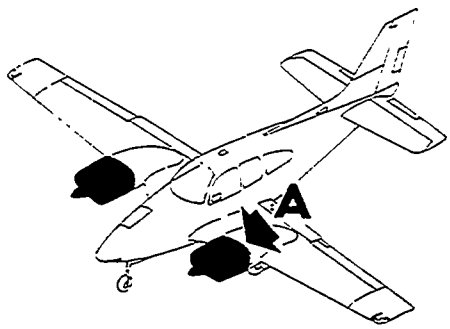

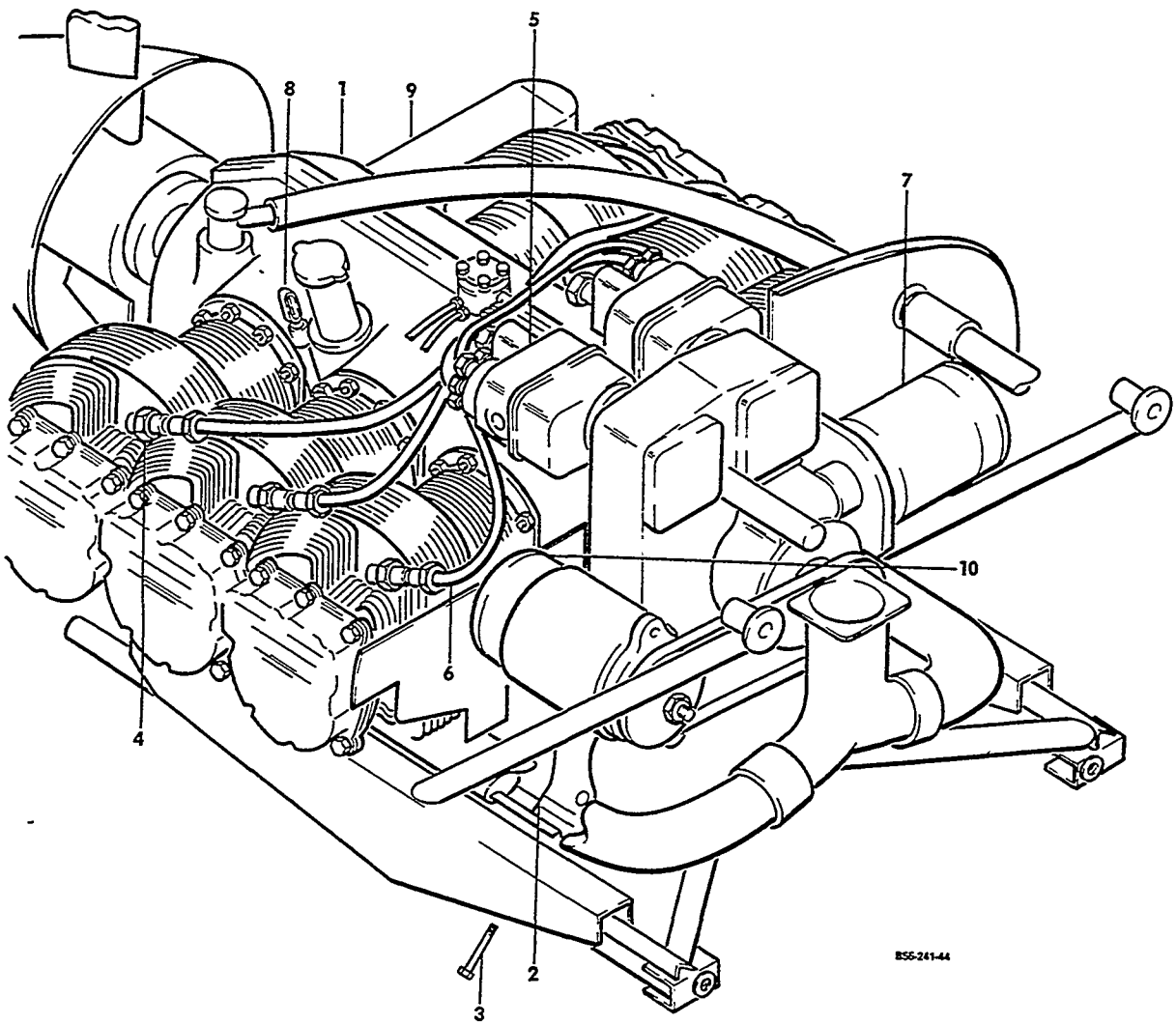

VIEW **A**

FIGURE 00-02.POWER PLANT INSTALLATION
/SHEET 1 OF 5 SHEETS/

ATA CODE & INDEX NO.	PART NO.	DESCRIPTION 1 2 3 4 5 6 7	UNITS PER ASSY	USABLE ON CODE
00-02	96-910001-89	POWER PLANT INSTL,LH/WITH GENERATOR/.	NP	1
	96-910001-90	POWER PLANT INSTL,RH/WITH GENERATOR	NP	1
	96-910001-115	POWER PLANT INSTL,LH/WITH ALTERNATOR/	NP	1
	96-910001-116	POWER PLANT INSTL,RH/WITH ALTERNATOR/	NP	1
	96-910001-125	POWER PLANT INSTL,LH/WITH GENERATOR AND . . . . 3 BLADE PROPELLER/	NP	1
	96-910001-126	POWER PLANT INSTL,RH/WITH GENERATOR AND . . . . 3 BLADE PROPELLER/	NP	1
	96-910001-127	POWER PLANT INSTL,LH/WITH ALTERNATOR AND. . . . 3 BLADE PROPELLER/	NP	1
	96-910001-128	POWER PLANT INSTL,RH/WITH ALTERNATOR AND. . . . 3 BLADE PROPELLER/	NP	1
	96-910001-601	. POWER PLANT ASSY,LH	1	1
	96-910001-602	. POWER PLANT ASSY,RH	1	1
- 1	IO-470-L	. . ENGINE ASSY . . . . . /ATTACHING PARTS/	2	1
- 2	J9613-5	. . MOUNT,ENGINE SHOCK.	4	
- 3	AN7-41A	. . BOLT.	4	
	AN960-716	. . WASHER.	4	
		——+——		
- 4	RHB36W	. . . PLUG,SPARK/CHAMPION/.	12	1
	AC271	. . . PLUG,SPARK/AC/ALTERNATE FOR RHB36W/ . . .	12	1
	S6RN201	. . . MAGNETO,LH.	1	2
	SRN205	. . . MAGNETO,RH.	1	2
- 5	S6RN1201	. . . MAGNETO,LH.	1	3
	S6RN1205	. . . MAGNETO,RH. . . . . /ATTACHING PARTS/	1	3
	535847	. . . WASHER.	4	
	AN936A516	. . . WASHER,LOCK	4	
	AN315-5R	. . . NUT	4	
		——+——		
	10-382584	. . . . BREAKER ASSY,MAGNETO.	1	1
	10-163131	. . . . CAPACITOR,MAGNETO	1	3
	627805	. . . HARNESS ASSY,LH MAGNETO	1	2
	627804	. . . HARNESS ASSY,RH MAGNETO	1	2
- 6	636952	. . . HARNESS ASSY,MAGNETO.	1	3
	626062-2	. . . PUMP,ENGINE DRIVEN FUEL	1	4
	635135-3	. . . PUMP,ENGINE DRIVEN FUEL	1	5
- 7	1108234	. . . STARTER	1	1
	MHJ4003	. . . STARTER/ALTERNATE FOR 1108234/. . . . . /SUPERSEDES MHJ4002/SEE CHAPTER 80/	1	1
- 8	629327-1	. . . DIPSTICK,LH ENGINE OIL.	1	1
	629327-2	. . . DIPSTICK,RH ENGINE OIL.	1	1
- 9	639151	. . . COOLER,ENGINE OIL/NON-CONGEALING TYPE/. .	1	1
	1101911	. . . GENERATOR,25 AMP.	1	1
- 10	1105056	. . . GENERATOR,40 AMP.	1	1
	627377	. . . PULLEY/USED WITH 25 AMP GENERATOR/. . . .	1	1
	628005	. . . PULLEY/USED WITH 40 AMP GENERATOR/. . . .	1	1
	1100718	. . . ALTERNATOR,50 AMP/SEE S.I. NO.0184-241/ .	1	6
	1100747	. . . ALTERNATOR,50 AMP/ALTERNATE FOR 1100718/.	1	6
	ALT8407	. . . ALTERNATOR,50 AMP/SUPERSEDES ALT8403/ . .	1	7

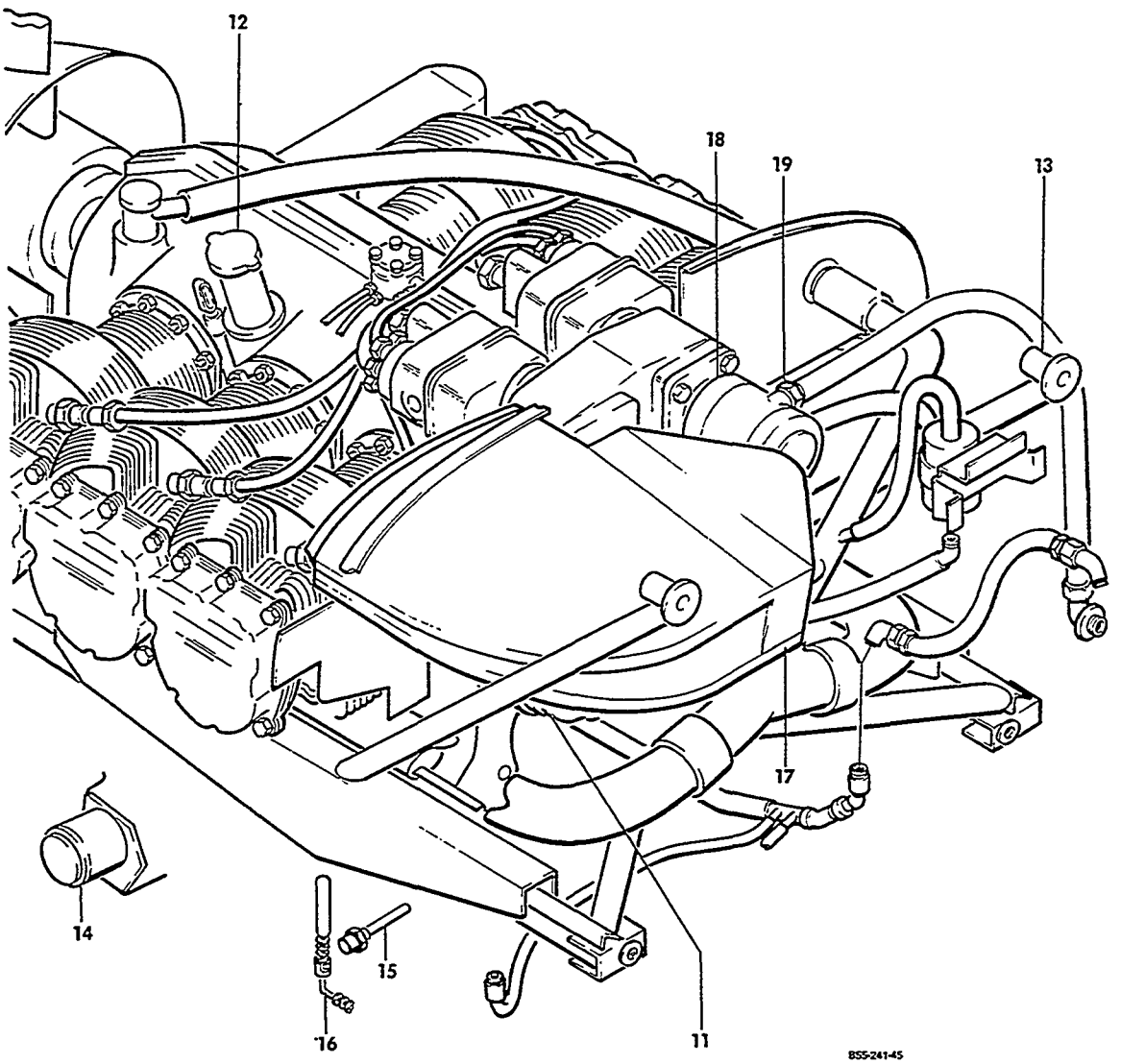

FIGURE 00-02.POWER PLANT INSTALLATION
/SHEET 2 OF 5 SHEETS/

SUB-SECT UNIT & ITEM NO.	PART NO.	DESCRIPTION 1 2 3 4 5 6 7	UNITS PER ASSY	USABLE ON CODE
00-02	634571	. . . PULLEY/USED WITH 50 AMP ALTERNATOR/ . . .	1	1
- 11	539547-31-19	. . . BELT,ALTERNATOR DRIVE	1	1
	539547-32	. . . BELT,GENERATOR DRIVE.	1	1
- 12	539291	. . . CAP AND RETAINER ASSY,ENGINE OIL FILLER .	1	1
	EQ5850L	. . . INJECTION SYSTEM COMPLETE,FUEL.	1	1
	534862	. . . SCREEN ASSY,OIL FILTER.	1	1
- 13	96-910005-75	. . MOUNT ASSY,ENGINE . . . . . /ATTACHING PARTS/	1	1
	NAS146-22	. . BOLT,LOWER FITTING.	2	
	NAS146-46	. . BOLT,UPPER FITTING.	2	
	NAS143-6C	. . WASHER.	4	
	AN960-616	. . WASHER/MAXIMUM OF 12/	AR	
	EB064	. . NUT	4	
	210355	. . GOVERNOR,PROPELLER.	1	8
- 14	96-380031	. . GOVERNOR,PROPELLER. . . . . 96-380031-1 MAY BE USED TO REPLACE 2103 OR 96-380031 IF BOTH GOVERNORS ARE REPLACED.	1	9
- 15	MS28034-1	. . BULB,OIL TEMPERATURE.	1	1
	AN4076-1	. . FITTING,CYLINDER HEAD TEMPERATURE BULB. . .	1	1
- 16	AN5546-1	. . BULB,CYLINDER HEAD TEMPERATURE.	1	1
	96-389000	. . GENERATOR,TACHOMETER/SUPERSEDES 50-389040/.	1	1
	BJ1000AH3D0	. . PLUG,OIL SUMP DRAIN	1	1
- 17	96-919100-609	. . BOX ASSY,LH INDUCTION AIR/WITH GENERATOR/ . /SEE CHAPTER 71-64-01/	1	1
	96-919100-615	. . BOX ASSY,RH INDUCTION AIR/WITH GENERATOR/ . /SEE CHAPTER 71-64-01/	1	1
	96-919100-611	. . BOX ASSY,LH INDUCTION AIR/WITH DELCOTRON. . ALTERNATOR/SEE CHAPTER 71-64-01/	1	6
	96-919100-613	. . BOX ASSY,RH INDUCTION AIR/WITH DELCOTRON. . ALTERNATOR/SEE CHAPTER 71-64-01/	1	6
	96-919100-617	. . BOX ASSY,LH INDUCTION AIR/WITH PRESTOLITE . ALTERNATOR/SEE CHAPTER 71-64-01/	1	7
	96-919100-618	. . BOX ASSY,RH INDUCTION AIR/WITH PRESTOLITE . ALTERNATOR/SEE CHAPTER 71-64-01/	1	7
- 18	G455	. . PUMP ASSY,VACUUM.	1	1
- 19	AN840-8	. . ADAPTER,VACUUM PUMP HOSE/LOWER PART/. . . .	1	1
	AN840-9	. . ADAPTER,VACUUM PUMP HOSE/UPPER PORT/. . . .	1	1
	50-380090	. . PUMP ASSY,VACUUM/USED WITH SURFACE DEICE. . OR AUTOPILOT/	1	1
	50-380090-1	. . PUMP ASSY,VACUUM/ALTERNATE FOR 50-380090/ . /USED WITH SURFACE DEICE OR AUTOPILOT/	1	1
	50-380090-2	. . PUMP ASSY,VACUUM/ALTERNATE FOR 50-380090/ . /USED WITH SURFACE DEICE OR AUTOPILOT/	1	1
	AN840-10	. . ADAPTER,VACUUM PUMP HOSE.	1	1
	AN844-10	. . ELBOW	1	1

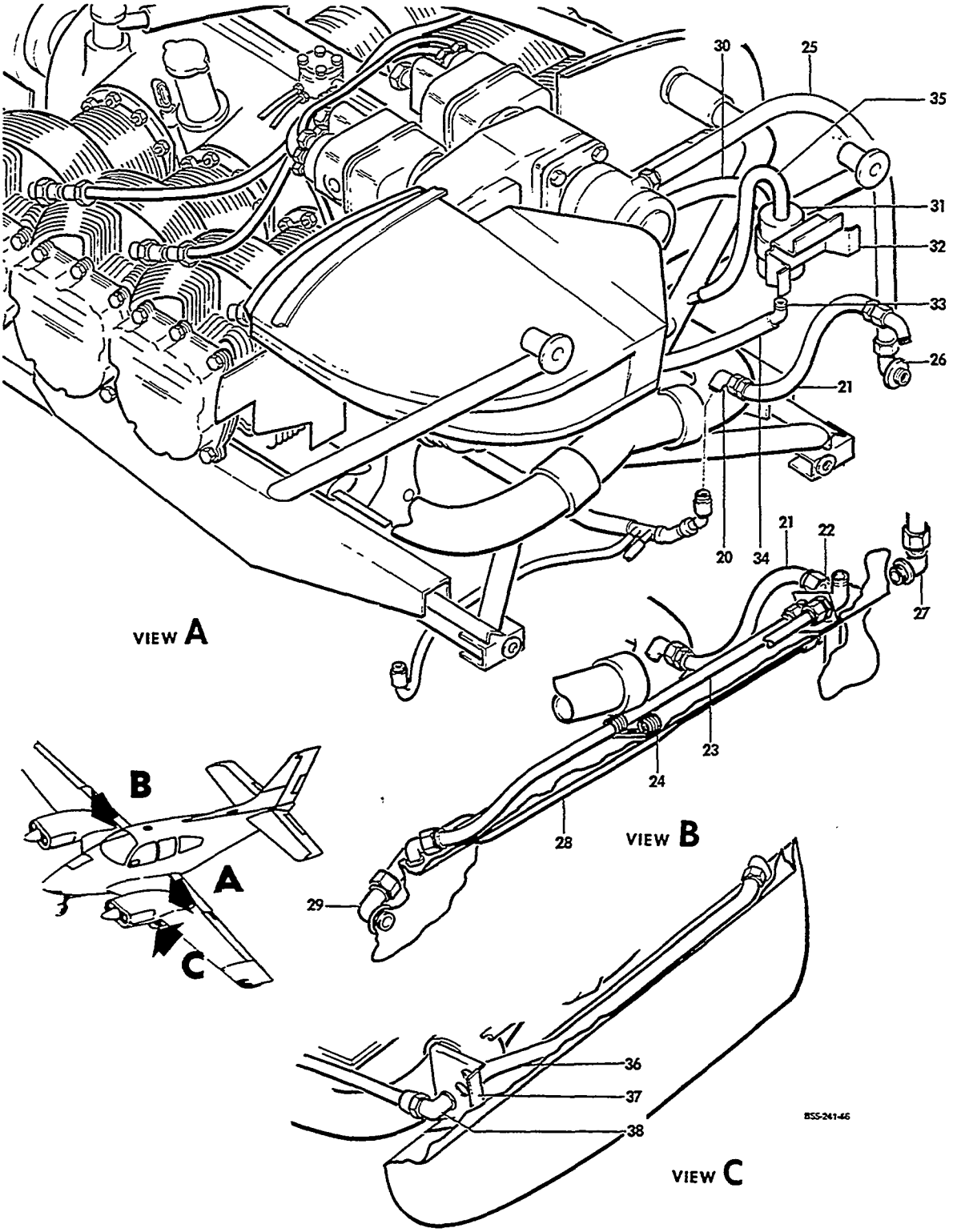

FIGURE 00-02.POWER PLANT INSTALLATION
/SHEET 3 OF 5 SHEETS/

ATA CODE & INDEX NO.	PART NO.	DESCRIPTION 1 2 3 4 5 6 7	UNITS PER ASSY	USABLE ON CODE
00-02 - 20	AN822-4	ELBOW,MANIFOLD PRESSURE	1	1
	AN6290-4-10	HOSE ASSY,MANIFOLD PRESSURE LH.	1	10
	AN6270-4-22	HOSE ASSY,MANIFOLD PRESSURE RH.	1	10
- 21	AN6270-4-10	HOSE ASSY,MANIFOLD PRESSURE	2	11
- 22	AN833-4D	ELBOW,MANIFOLD PRESSURE TUBE.	1	11
- 23	96-910001-130	TUBE ASSY,MANIFOLD PRESSURE/RH ONLY/.	1	11
- 24	MS21919DG4	CLAMP/RH ONLY/.	1	11
		/ATTACHING PARTS/		
	AN520-10	SCREW	1	
	AN960-10	WASHER.	1	
		----*----		
	MS28741-8-0201	HOSE ASSY,LH AIR INTAKE	1	10
	MS28741-8-0385	HOSE ASSY,RH AIR INTAKE	1	10
	106200H8-84	HOSE,AIR INTAKE	1	12
- 25	106200H10-84	HOSE,AIR INTAKE	1	11
	AN822-8D	ELBOW,LH/AIR INTAKE HOSE TO FIREWALL/	1	10
	AN842-8D	ELBOW,LH/AIR INTAKE HOSE TO FIREWALL/	1	12
	AN912-4D	BUSHING,LH/AIR INTAKE HOSE TO FIREWALL/	1	13
- 26	AN842-10D	ELBOW,LH/AIR INTAKE HOSE TO FIREWALL/	1	11
	AN838-8D	ELBOW,RH/AIR INTAKE HOSE TO FIREWALL/	1	12
- 27	AN838-10D	ELBOW,RH.	1	11
	AN960-1216L	WASHER,RH	1	12
	AN960-1416L	WASHER,RH	1	11
	AN924-8D	NUT,RH.	1	12
	AN924-10D	NUT,RH.	1	11
	96-910001-132	TUBE ASSY,VACUUM/RH ONLY/	1	12
- 28	96-910001-133	TUBE ASSY,VACUUM/RH ONLY/	1	11
	AN822-8D	ELBOW,RH.	1	12
	AN912-4D	REDUCER,RH.	1	12
- 29	MS20822-10D	ELBOW,RH.	1	11
	106200FR8-44	HOSE,AIR DISCHARGE.	1	10
- 30	106200H8-40	HOSE,AIR DISCHARGE.	1	14
		/ATTACHING PARTS/		
	AN737TW30	CLAMP	2	
		----*----		
- 31	HE642	SEPARATOR,VAC SYSTEM OIL/SUPERSEDES G4026/.	1	1
		/ATTACHING PARTS/		
	AN520-10R	SCREW	2	
	AN960-10	WASHER.	2	
	MS20365-1032	NUT	2	
		----*----		
- 32	95-910001-43	BRACKET,OIL SEPARATOR	1	1
- 33	AN844-4	ELBOW/SEPARATOR TO OIL RETURN HOSE/	1	1
	106200FR4-94	HOSE,OIL RETURN	1	10
- 34	106200H4-90	HOSE,OIL RETURN	1	14
	106200FR8-44	HOSE,OIL SEPARATOR AIR DISCHARGE.	1	10
- 35	106200H8-42	HOSE,OIL SEPARATOR AIR DISCHARGE.	1	14
- 36	96-910001-31	TUBE ASSY,OIL PRESSURE/LH FIREWALL/	1	1
- 37	96-910001-29	BRACKET,LH.	1	1
	AN833-4D	ELBOW,OIL PRESSURE HOSE	1	10
- 38	AN837-4D	ELBOW,OIL PRESSURE HOSE	1	14
	AN960-716	WASHER.	1	1
	AN924-4D	NUT	1	1

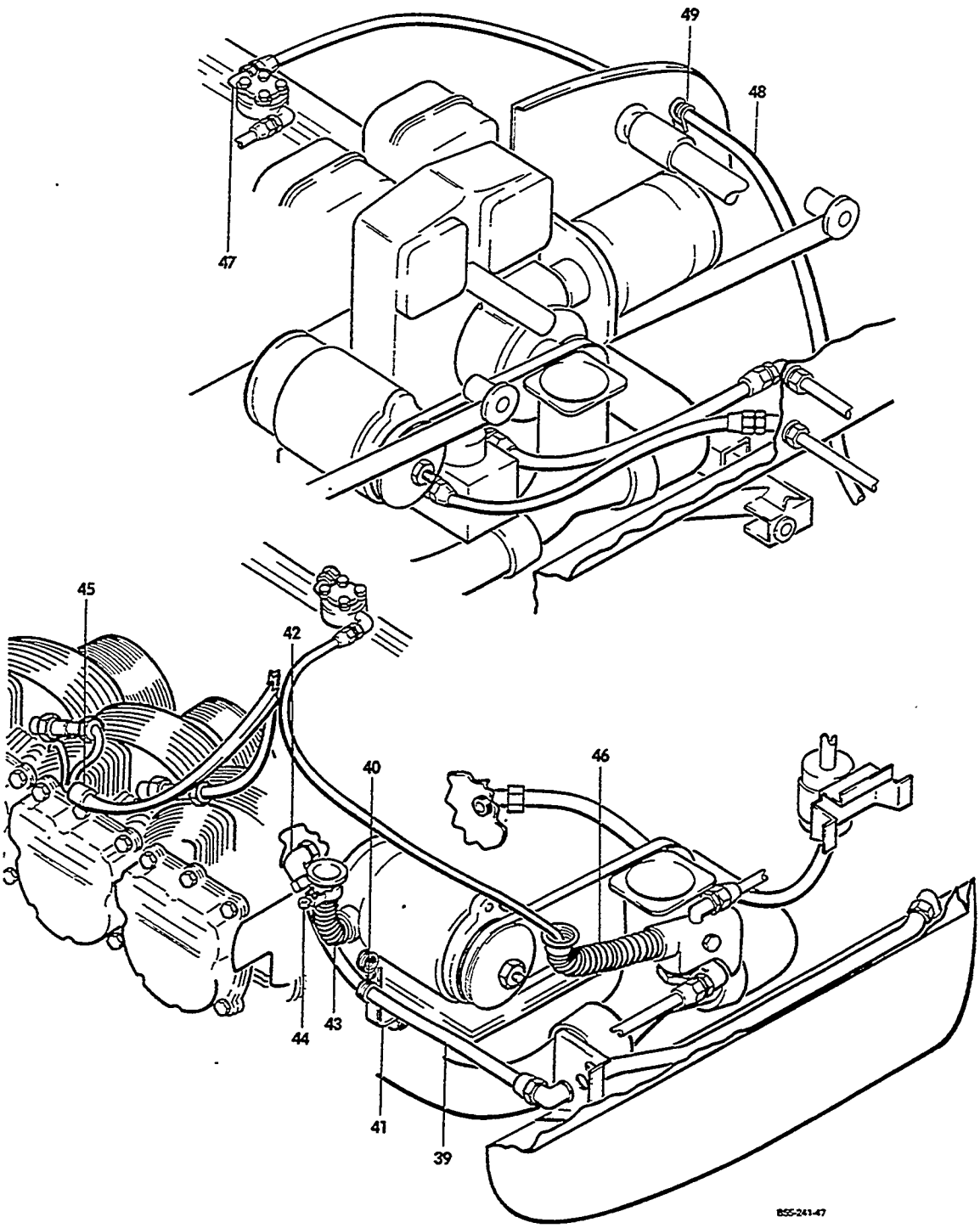

FIGURE 00-02.POWER PLANT INSTALLATION
/SHEET 4 OF 5 SHEETS/

ATA CODE & INDEX NO.	PART NO.	DESCRIPTION 1 2 3 4 5 6 7	UNITS PER ASSY	USABLE ON CODE
00-02	96-910001-33	TUBE ASSY,OIL PRESSURE FWD.	1	10
	MS28741-4-0100	HOSE ASSY,OIL PRESSURE LH AFT	1	10
	MS28741-4-0110	HOSE ASSY,OIL PRESSURE RH AFT	1	10
- 39	MS28741-4-0260	HOSE ASSY,OIL PRESSURE.	1	14
- 40	MS21919DG8	CLAMP,OIL PRESSURE LINE CLAMP	1	1
		/ATTACHING PARTS/		
	AN3-5A	BOLT.	1	
	MS20365-1032	NUT	1	
		----*----		
	96-910001-53	BRACKET	1	10
- 41	96-910001-134	BRACKET	1	11
	AN912-3	REDUCER/FOR OIL PRESSURE RESTRICTOR/.	1	1
- 42	45-93912G	RESTRICTOR ASSY,OIL PRESSURE.	1	1
- 43	96-910001-57	TUBE,GENERATOR BLAST.	1	1
	96-910001-145	TUBE,ALTERNATOR BLAST	1	1
- 44	AN737RM38	CLAMP,ALTERNATOR BLAST TUBE	2	1
- 45	M1779	CLAMP,MAGNETO HARNESS	2	1
	96-910001-51	BRACKET,OIL AND CYLINDER TEMP WIRE.	4	1
	96-910001-79	BRACKET,STARTER LEAD SUPPORT.	1	1
	MS21919DG7	CLAMP,STARTER LEAD.	1	1
- 46	115167CXZ060585	DUCT,FUEL PUMP COOLING.	1	1
	35-910004-7	WASHER,COOLING DUCT FLANG SUPPORT	1	1
		/ATTACHING PARTS/		
	AN515-8R	SCREW	4	
	AN960-8	WASHER.	4	
	MS20365-1032	NUT	4	
		----*----		
	IE12G	BONDING JUMPER.	1	1
	6041H190	RELAY,STARTER	1	1
		/ATTACHING PARTS/		
	AN4-4	BOLT.	2	
	AN936B416	WASHER.	1	
		----*----		
	60-389017-1	REGULATOR,OVERVOLTAGE/50 AMP ALTERNATOR/.	1	1
	1118976	REGULATOR,VOLTAGE/25 AMP GENERATOR/	1	1
	1119237C	REGULATOR,VOLTAGE/40 AMP GENERATOR/	1	1
		/ATTACHING PARTS/		
	AN4-4	BOLT.	3	
	MS20365-428	NUT	3	
		----*----		
	1116902	RELAY,PARALLELING/WITH GENERATOR/	1	1
		/ATTACHING PARTS/		
	AN4-4	BOLT.	2	
	AN960-416	WASHER.	2	
	MS20365-428	NUT	2	
		----*----		
- 47	96-920014	RESTRICTOR,FUEL	1	1
- 48	MS28741-4-200	HOSE ASSY,FUEL PRESSURE	1	1
	NAS43DD3-32	SPACER/RH ONLY/	1	1
- 49	AN837-4	FITTING	1	1
	AN924-4	NUT	1	1

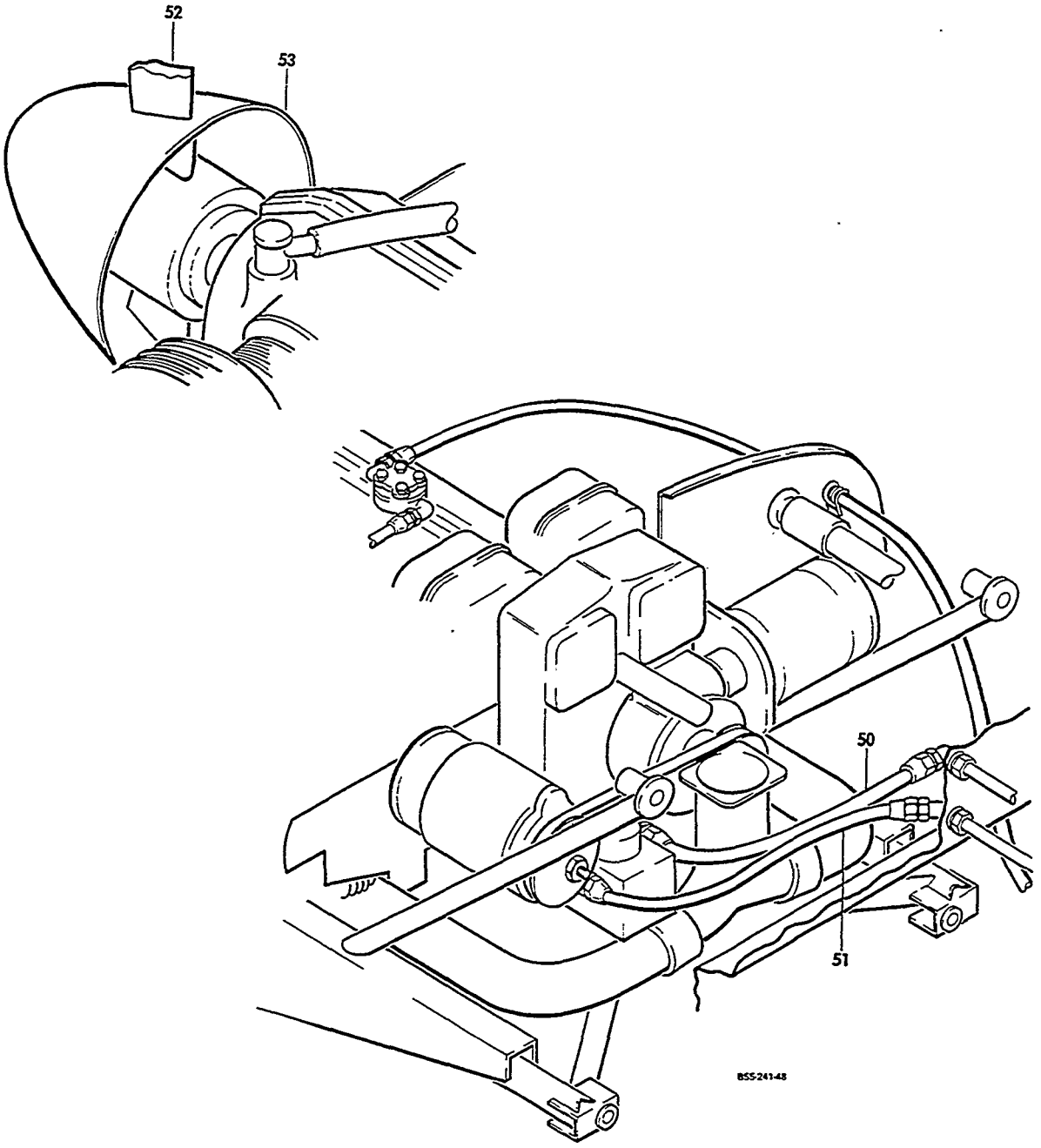

FIGURE 00-02.POWER PLANT INSTALLATION
/SHEET 5 OF 5 SHEETS/

ATA CODE & INDEX NO.	PART NO.	DESCRIPTION 1 2 3 4 5 6 7	UNITS PER ASSY	USABLE ON CODE
00-02 - 50	MS28741-4-0222	. . HOSE ASSY,FUEL AND VAPOR RETURN/LH AND RH/.	1	1
	MS28741-6-0184	. . HOSE ASSY/FIREWALL TO PUMP/LH AND RH/ . . .	1	17
- 51	MS28741-8-0184	. . HOSE ASSY/FIREWALL TO PUMP/LH AND RH/ . . .	1	18
- 52	2AF34C5578FFO	. PROPELLER ASSY,2 BLADE.	1	1
	PHCA3VFBV7636D	. PROPELLER ASSY,3 BLADE.	1	1
	96-960006-604	. PROPELLER ASSY,2 BLADE/ANTI-ICE EQUIPPED/ . . /SEE CHAPTER 30/	1	1
	PHCA3VF2BF7636DB	. PROPELLER ASSY,3 BLADE/ANTI-ICE . . . . . EQUIPPED/SUPERSEDES PHC-A3XF-2B/F7636DB/ /SEE CHAPTER 30/	1	1
	96-960007-614	. PROPELLER ASSY,2 BLADE/ELECTRIC DEICE/. . . . /SEE CHAPTER 30/	1	20
	96-960009-604	. PROPELLER ASSY,3 BLADE/ELECTRIC DEICE/. . . . /SEE CHAPTER 30/	1	19
		NOTE FOR PROP BREAKDOWN SEE CHAPTER 61.		
- 53	96-910001-123	. SPINNER ASSY,PROPELLER/WITH GENERATOR AND . . 2 BLADE PROPELLER/	1	1
	96-910001-65	. SPINNER ASSY,PROPELLER/WITH ALTERNATOR AND. . 2 BLADE PROPELLER/	1	1
	836-37P	. SPINNER ASSY,PROPELLER/WITH 3 BLADE PROP/ . .	1	1
	96-960006-29	. SPINNER ASSY,PROPELLER/2 BLADE PROP/. . . . . WITH ANTI-ICE/	1	15
	96-960008-1	. SPINNER ASSY,PROPELLER/2 BLADE PROP/. . . . . WITH ANTI-ICE/	1	16
	836-36P	. SPINNER ASSY,PROPELLER/3 BLADE PROP/. . . . . WITH ANTI-ICE/	1	1
	96-960007-612	. SPINNER ASSY,PROPELLER/2 BLADE PROP/. . . . . WITH ELECTRIC DEICE/	1	1
		NOTE FOR ENGINE EXHAUST SYSTEM SEE CHAPTER 78.		

CODES OF EFFECTIVITY

1	TC-502 THRU TC-1254	2	TC-502 THRU TC-962
3	TC-963 THRU TC-1254	4	TC-502 THRU TC-1224
5	TC-1225 THRU TC-1254	6	TC-502 THRU TC-1178
7	TC-1179 THRU TC-1254	8	TC-502 THRU TC-936 EXCEPT TC-663
9	TC-663,TC-937 THRU TC-1254	10	TC-502 THRU TC-810 EXCEPT TC-635
11	TC-811 THRU TC-1254	12	TC-635
13	TC-502 THRU TC-810	14	TC-635,TC-811 THRU TC-1254
15	TC-502 THRU TC-1236	16	TC-1237 THRU TC-1254
17	TC-502 THRU TC-954	18	TC-955 THRU TC-1254
19	TC-973 THRU TC-1254	20	TC-874 THRU TC-987

"END"

71-00-03
POWER PLANT INSTALLATION
TC-1255 THRU TC-1607

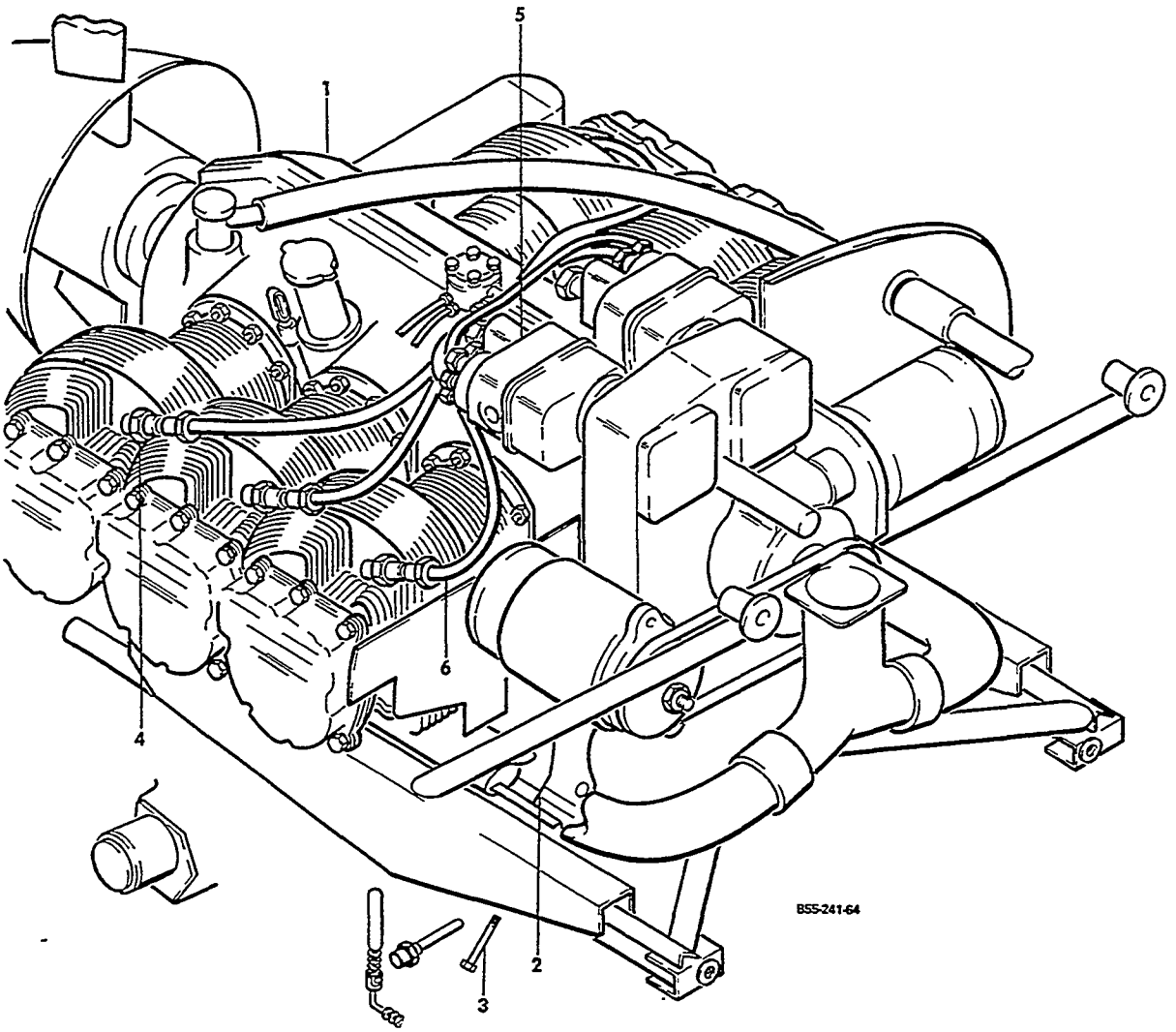

FIGURE 00-03.POWER PLANT INSTALLATION
/SHEET 1 OF 5 SHEETS/

ATA CODE & INDEX NO.	PART NO.	DESCRIPTION 1 2 3 4 5 6 7	UNITS PER ASSY	USABLE ON CODE
00-03	96-910001-89	POWER PLANT INSTL,LH/WITH GENERATOR/.	NP	1
	96-910001-90	POWER PLANT INSTL,RH/WITH GENERATOR/.	NP	1
	96-910001-115	POWER PLANT INSTL,LH/WITH ALTERNATOR/	NP	1
	96-910001-116	POWER PLANT INSTL,RH/WITH ALTERNATOR/	NP	1
	96-910001-125	POWER PLANT INSTL,LH/WITH GENERATOR AND . . . . 3 BLADE PROPELLER/	NP	2
	96-910001-126	POWER PLANT INSTL,RH/WITH GENERATOR AND . . . . 3 BLADE PROPELLER/	NP	2
	96-910001-127	POWER PLANT INSTL,LH/WITH ALTERNATOR AND. . . . 3 BLADE PROPELLER/	NP	2
	96-910001-128	POWER PLANT INSTL,RH/WITH ALTERNATOR AND. . . . 3 BLADE PROPELLER/	NP	2
	96-910001-139	POWER PLANT INSTL,LH/WITH GENERATOR/.	NP	3
	96-910001-140	POWER PLANT INSTL,RH/WITH GENERATOR/.	NP	3
	96-910001-141	POWER PLANT INSTL,LH/WITH ALTERNATOR/	NP	3
	96-910001-142	POWER PLANT INSTL,RH/WITH ALTERNATOR/	NP	3
	96-910001-153	POWER PLANT INSTL,LH/WITH GENERATOR AND . . . . 2 BLADE HARTZELL PROPELLER/	NP	4
	96-910001-154	POWER PLANT INSTL,RH/WITH GENERATOR AND . . . . 2 BLADE HARTZELL PROPELLER/	NP	4
	96-910001-155	POWER PLANT INSTL,LH/WITH ALTERNATOR AND. . . . 2 BLADE HARTZELL PROPELLER/	NP	5
	96-910001-156	POWER PLANT INSTL,RH/WITH ALTERNATOR AND. . . . 2 BLADE HARTZELL PROPELLER/	NP	5
	96-910001-157	POWER PLANT INSTL,LH/WITH GENERATOR AND . . . . 3 BLADE HARTZELL PROPELLER/	NP	6
	96-910001-158	POWER PLANT INSTL,RH/WITH GENERATOR AND . . . . 3 BLADE HARTZELL PROPELLER/	NP	6
	96-910001-159	POWER PLANT INSTL,LH/WITH ALTERNATOR AND. . . . 3 BLADE HARTZELL PROPELLER/	NP	6
	96-910001-160	POWER PLANT INSTL,RH/WITH ALTERNATOR AND. . . . 3 BLADE HARTZELL PROPELLER/	NP	6
	96-910001-601	. POWER PLANT ASSY,LH	1	7
	96-910001-602	. POWER PLANT ASSY,RH	1	7
- 1	IO-470-L	. . ENGINE ASSY . . . . . /ATTACHING PARTS/	1	7
- 2	J9613-5	. . MOUNT,ENGINE SHOCK.	4	
- 3	AN7-41A	. . BOLT.	4	
	AN960-716	. . WASHER.	4	
		——*——		
- 4	RHB36W	. . . PLUG,SPARK/CHAMPION/.	12	7
	AC271	. . . PLUG,SPARK/AC/ALTERNATE FOR RHB36W/ . . .	12	7
	S6RN1201	. . . MAGNETO,LH.	1	8
	S6RN1205	. . . MAGNETO,RH.	1	8
	625765	. . . MAGNETO	2	9
	636141	. . . MAGNETO/ALTERNATE FOR G25765/	2	9
- 5	S6RN1225	. . . MAGNETO . . . . . /ATTACHING PARTS/	2	10
	535847	. . . WASHER.	4	
	AN936A516	. . . WASHER,LOCK	4	
	AN315-5R	. . . NUT	4	
		——*——		
	10-382584	. . . . BREAKER ASSY,MAGNETO.	1	8
	15-48A	. . . . POINTS,CONTACT BREAKER.	1	9
	10-357063	. . . . POINTS,CONTACT BREAKER.	1	10

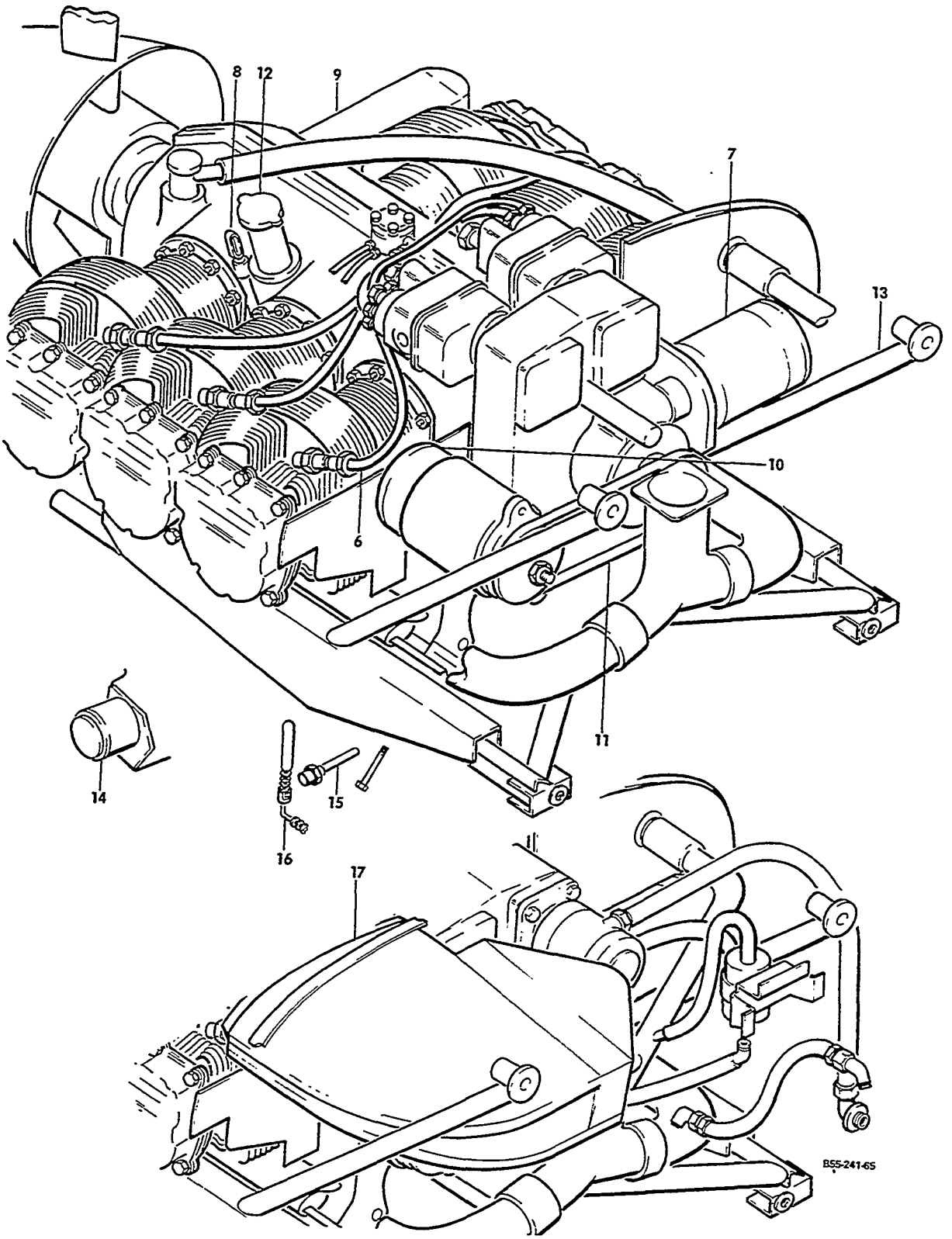

FIGURE 00-03.POWER PLANT INSTALLATION
/SHEET 2 OF 5 SHEETS/

ATA CODE & INDEX NO.	PART NO.	DESCRIPTION 1 2 3 4 5 6 7	UNITS PER ASSY	USABLE ON CODE
00-03	10-163131	. . . . CAPACITOR,MAGNETO	1	8
	14-48A	. . . . CONDENSOR,MAGNETO	1	9
	10-349276	. . . . CONDENSOR,MAGNETO	1	10
	636952	. . . HARNESS ASSY,MAGNETO.	1	13
	633311	. . . HARNESS ASSY,MAGNETO.	1	11
	636140	. . . HARNESS ASSY,MAGNETO.	1	12
- 6	640031	. . . HARNESS ASSY,MAGNETO.	1	10
	635135-3	. . . PUMP,ENGINE DRIVEN FUEL	1	12
	638156-3A16	. . . PUMP,ENGINE DRIVEN FUEL	1	10
- 7	1108234	. . . STARTER	1	7
	MHJ4003	. . . STARTER/ALTERNATE FOR 1108234/. . . . . /SUPERSEDES MHJ4002/SEE CHAPTER 80/	1	7
- 8	629327-1	. . . DIPSTICK,LH ENGINE OIL.	1	7
	629327-2	. . . DIPSTICK,RH ENGINE OIL.	1	7
- 9	639151	. . . COOLER,ENGINE OIL	1	7
	1101911	. . . GENERATOR,25 AMP.	1	7
- 10	1105056	. . . GENERATOR,40 AMP.	1	7
	627377	. . . PULLEY/USED WITH 25 AMP GENERATOR/. . . .	1	7
	628005	. . . PULLEY/USED WITH 40 AMP GENERATOR/. . . .	1	7
	ALT8407	. . . ALTERNATOR,50 AMP/SUPERSEDES ALT8403/ . .	1	7
	634571	. . . PULLEY/USED WITH 50 AMP ALTERNATOR/ . . .	1	7
	539547-31-19	. . . BELT,ALTERNATOR DRIVE	1	7
- 11	539547-32	. . . BELT,GENERATOR DRIVE.	1	7
- 12	539291	. . . CAP AND RETAINER ASSY,ENGINE OIL FILLER .	1	7
	EQ5850L	. . . INJECTION SYSTEM,COMPLETE FUEL.	1	7
	534862	. . . SCREEN ASSY,OIL FILTER.	1	7
- 13	96-910005-75	. . MOUNT ASSY,ENGINE . . . . . /ATTACHING PARTS/	1	7
	NAS146-22	. . BOLT,LOWER FITTING.	2	
	NAS146-46	. . BOLT,UPPER FITTING.	2	
	NAS143-6C	. . WASHER.	4	
	AN960-616	. . WASHER/MAXIMUM OF 12/	AR	
	EB064	. . NUT	4	
- 14	96-380031	. . GOVERNOR,PROPELLER.	1	14
	96-380031-1	. . GOVERNOR,PROPELLER.	1	15
		NOTE 96-380031-1 MAY BE USED TO REPLACE 96-380031 IF BOTH GOVERNORS ARE REPLACED.		
- 15	MS28034-1	. . BULB,OIL TEMPERATURE.	1	7
	AN4076-1	. . FITTING,CYLINDER HEAD TEMPERATURE BULB. . .	1	7
- 16	AN5546-1	. . BULB,CYLINDER HEAD TEMPERATURE.	1	7
	96-389000	. . GENERATOR,TACHOMETER/SUPERSEDES 50-389040/.	1	7
	BJ1000AH3D0	. . PLUG,OIL SUMP DRAIN	1	7
- 17	96-919100-609	. . BOX ASSY,LH INDUCTION AIR/WITH GENERATOR/ .	1	7
	96-919100-615	. . BOX ASSY,RH INDUCTION AIR/WITH GENERATOR/ .	1	7
	96-919100-617	. . BOX ASSY,LH INDUCTION AIR/WITH ALTERNATOR/.	1	7
	96-919100-618	. . BOX ASSY,RH INDUCTION AIR/WITH ALTERNATOR/.	1	7

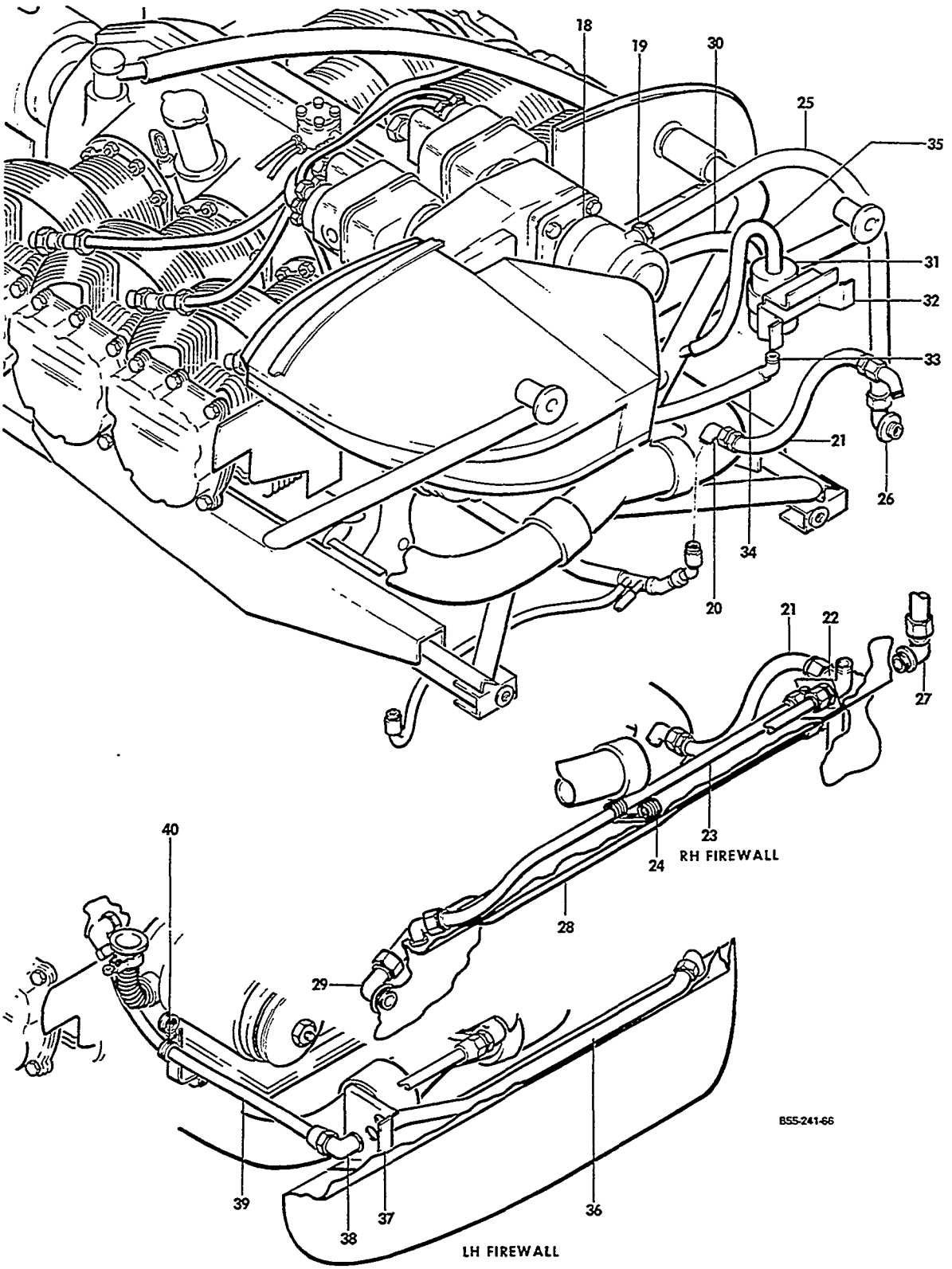

FIGURE 00-03.POWER PLANT INSTALLATION
/SHEET 3 OF 5 SHEETS/

ATA CODE & INDEX NO.	PART NO.	DESCRIPTION 1 2 3 4 5 6 7	UNITS PER ASSY	USABLE ON CODE
00-03 - 18	G455	PUMP ASSY,VACUUM.	1	7
- 19	AN840-8	ADAPTER,VACUUM PUMP HOSE/LOWER PORT/.	1	7
	AN840-9	ADAPTER,VACUUM PUMP HOSE/UPPER PORT/.	1	7
	50-380090	PUMP ASSY,VACUUM/USED WITH SURFACE DEICE. OR AUTOPILOT/	1	7
	50-380090-1	PUMP ASSY,VACUUM/ALTERNATE FOR 50-380090/ USED WITH SURFACE DEICE OR AUTOPILOT/	1	7
	50-380090-2	PUMP ASSY,VACUUM/ALTERNATE FOR 50-380090/ USED WITH SURFACE DEICE OR AUTOPILOT/	1	7
	AN840-10	ADAPTER,VACUUM PUMP HOSE.	1	7
	AN844-10	ELBOW	1	7
- 20	AN822-4	ELBOW,MANIFOLD PRESSURE	1	7
- 21	AN6270-4-10	HOSE ASSY,MANIFOLD PRESSURE	1	7
- 22	AN833-4D	ELBOW	1	7
	AN960-716L	WASHER.	1	7
	AN924-4D	NUT	1	7
- 23	96-910001-130	TUBE ASSY,MANIFOLD PRESSURE/RH/	1	7
- 24	MS21919DG4	CLAMP/RH/ /ATTACHING PARTS/	1	7
	AN520-10	SCREW	1	
	AN960-10	WASHER.	1	
- 25	106200H10-84	HOSE,AIR INTAKE	1	7
- 26	AN842-10D	ELBOW/AIR INTAKE HOSE TO FIREWALL/LH/	1	7
- 27	AN838-10D	ELBOW	1	7
	AN960-1416L	WASHER.	1	7
	AN924-10D	NUT	1	7
- 28	96-910001-133	TUBE ASSY,VACUUM/RH/.	1	7
- 29	MS20822-10D	ELBOW/RH/	1	7
- 30	106200G8-40	HOSE,AIR DISCHARGE. /ATTACHING PARTS/	1	7
	AN737TW30	CLAMP	2	
	HE642	SEPARATOR,OIL	1	16
	5042	SEPARATOR,OIL/ALTERNATE FOR HE642/.	1	16
- 31	5042-1	SEPARATOR,OIL /ATTACHING PARTS/	1	17
	AN520-10R	SCREW	2	
	AN960-10	WASHER.	2	
	MS20365-1032	NUT	2	
	95-910001-43	BRACKET,OIL SEPARATOR	1	16
- 32	96-910001-161	BRACKET,OIL SEPARATOR	1	17
- 33	AN844-4	ELBOW/SEPARATOR TO OIL RETURN HOSE/	1	7
	106200H4-90	HOSE,OIL RETURN	1	16
- 34	106200G-4-92	HOSE,OIL RETURN	1	17
	106200H8-42	HOSE,OIL SEPARATOR AIR DISCHARGE.	1	16
- 35	106200G-8-61	HOSE,OIL SEPARATOR AIR DISCHARGE.	1	17
- 36	96-910001-31	TUBE ASSY,OIL PRESSURE/LH FIREWALL/	1	7
- 37	96-910001-29	BRACKET/LH/	1	7
- 38	AN837-4D	ELBOW,OIL PRESSURE HOSE	1	7
	AN960-716	WASHER.	1	
	AN924-4D	NUT	1	
- 39	MS28741-4-0260	HOSE,OIL PRESSURE	1	7
- 40	MS21919DG8	CLAMP /ATTACHING PARTS/	1	7
	AN3-5A	BOLT.	1	
	MS20365-1032	NUT	1	

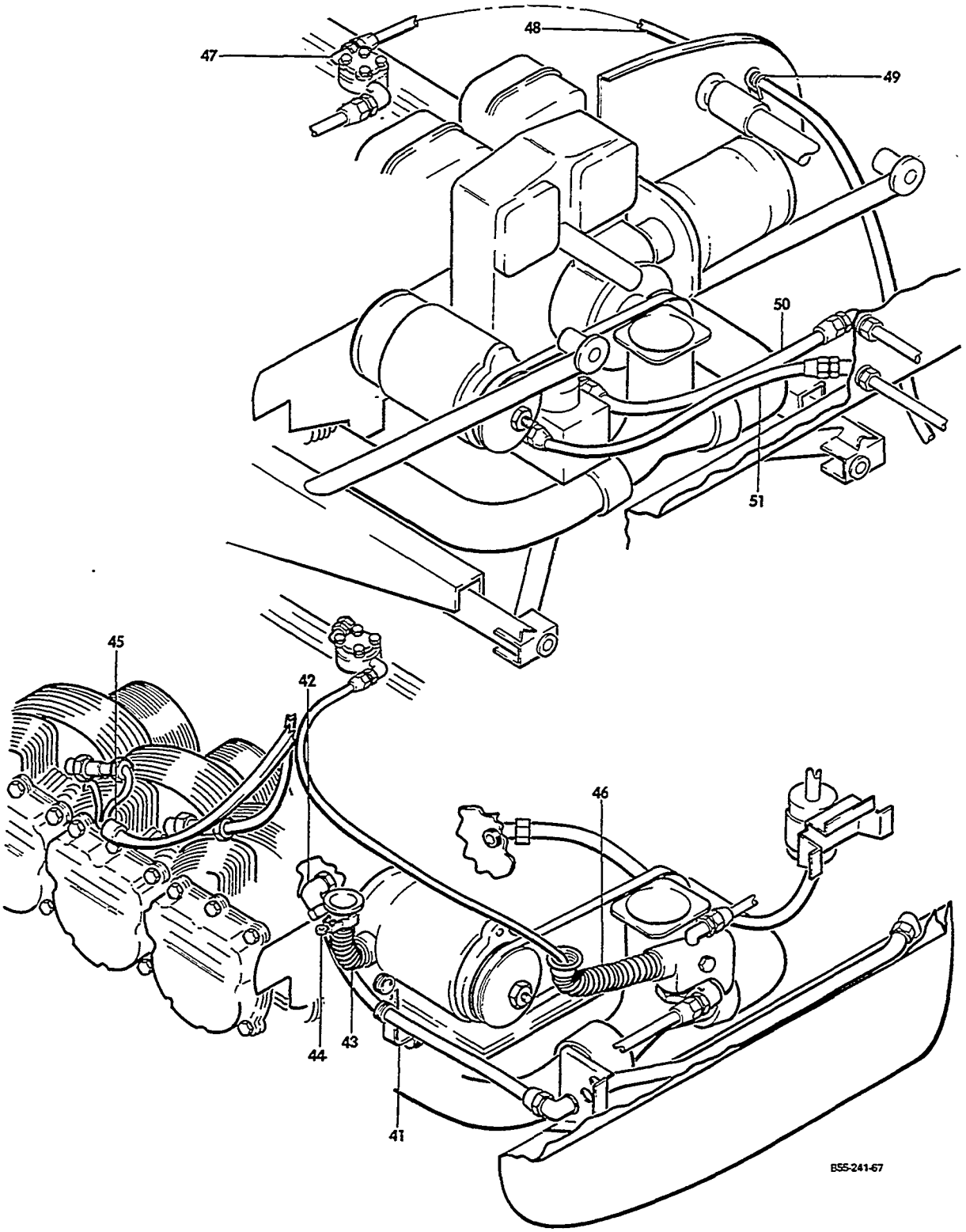

FIGURE 00-03.POWER PLANT INSTALLATION
/SHEET 4 OF 5 SHEETS/

ATA CODE & INDEX NO.	PART NO.	DESCRIPTION 1 2 3 4 5 6 7	UNITS PER ASSY	USABLE ON CODE
00-03 - 41	96-910001-134	BRACKET	1	7
- 42	45-939120	RESTRICTOR ASSY,OIL PRESSURE	1	7
- 43	96-910001-57	TUBE,GENERATOR BLAST	1	7
	96-910001-145	TUBE,ALTERNATOR BLAST	1	18
	111716-2XX19	TUBE,ALTERNATOR BLAST	1	19
	115167CXX040384	TUBE,ALTERNATOR BLAST	1	20
- 44	AN737RM38	CLAMP,ALTERNATOR BLAST TUBE	1	7
- 45	M1779	CLAMP,MAGNETO HARNESS	2	7
	96-910001-79	BRACKET,STARTER LEAD SUPPORT	1	7
	MS21919DG7	CLAMP,STARTER LEAD	1	7
	115167CXZ060585	DUCT	1	21
- 46	115167CXZ060505	DUCT	1	22
	35-910004-7	WASHER,TUBE FLANGE SUPPORT	1	7
		/ATTACHING PARTS/		
	AN515-8R	SCREW	4	
	AN960-8	WASHER	4	
	MS20365-1032	NUT	4	
		*		
	IE12G	BONDING JUMPER	1	7
	6041H190	RELAY,STARTER	1	7
		/ATTACHING PARTS/		
	AN4-4	BOLT	1	
	AN936B416	WASHER	1	
		*		
	60-389017-1	REGULATOR,OVERVOLTAGE/50 AMP ALTERNATOR/	1	7
	1118976	REGULATOR,VOLTAGE/25 AMP GENERATOR/	1	7
	1119237C	REGULATOR,VOLTAGE/40 AMP GENERATOR/	1	7
		/ATTACHING PARTS/		
	AN4-4	BOLT	3	
	MS20365-428	NUT	3	
		*		
	1116902	RELAY,PARALLELING/WITH GENERATOR/	1	7
		/ATTACHING PARTS/		
	AN4-4	BOLT	2	
	AN960-416	WASHER	2	
	MS20365-428	NUT	2	
		*		
- 47	96-920014	RESTRICTOR,FUEL	1	7
	MS28741-4-0200	HOSE ASSY,FUEL PRESSURE	1	24
- 48	MS28741-4-376	HOSE ASSY,FUEL PRESSURE	1	25
- 49	MS21919DG8	CLAMP	2	7
		/ATTACHING PARTS/		
	AN520-10R	SCREW	3	
	AN960-10L	WASHER	3	
	MS20365-1032C	NUT	3	
	AN743-12	CLIP,CLAMP SUPPORT	1	
	100696DZC018	SPACER	1	
		*		
	MS35489-16	GROMMET	1	7
	MS28741-4-0222	HOSE ASSY	1	7
- 50	MS28741-4-0396	HOSE ASSY	1	24
- 51	MS28741-8-0184	HOSE ASSY	1	7

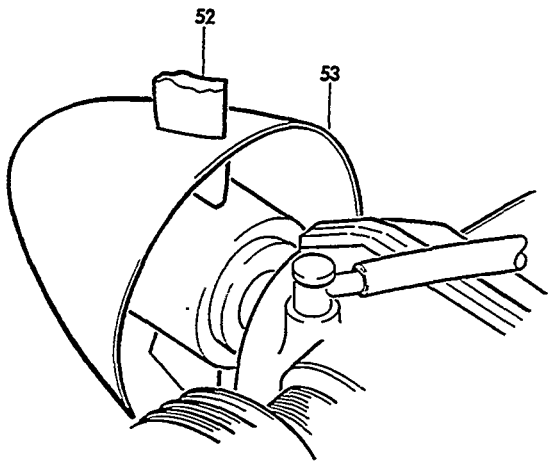

BSS-241-68

FIGURE 00-03.POWER PLANT INSTALLATION
/SHEET 5 OF 5 SHEETS/

SUB-SECT UNIT & ITEM NO.	PART NO.	DESCRIPTION 1 2 3 4 5 6 7	UNITS PER ASSY	USABLE ON CODE
00-03	2AF34C5578FF0	. PROPELLER ASSY,2 BLADE.	1	3
	PHCA3YF2BV7636D	. PROPELLER ASSY,3 BLADE.	1	2
- 52	R BHCC2YF2CHFFC8 *	4656 . PROPELLER ASSY,2 BLADE	1	4
	BHCC2YF2CHC84656	. PROPELLER ASSY,2 BLADE.	1	4
		/ALTERNATE FOR BHC-C2YF-2CHF/FC8465-6/		
	PHCC3YF2FFC766 *	32R . PROPELLER ASSY,3 BLADE.	1	6
	R PHCCYF2C78832R *	663-2R . PROPELLER ASSY,3 BLADE	1	6
		/ALTERNATE FOR PHC-C3YF-2F/FC7663-2R/		
	96-960006-604	. PROPELLER ASSY,2 BLADE/ANTI-ICE EQUIPPED/ . .	1	23
	96-960006-608	. PROPELLER ASSY,2 BLADE/ANTI-ICE EQUIPPED/ . .	1	4
	PHCA3YF2BF7636DB	. PROPELLER ASSY,3 BLADE.	1	2
		/ANTI-ICE EQUIPPED/		
	96-960006-610	. PROPELLER ASSY,3 BLADE/ANTI-ICE EQUIPPED/ . .	1	6
	96-960022-601	. PROPELLER ASSY,2 BLADE/ELEC DEICE EQUIPPED/ .	1	4
	96-960009-604	. PROPELLER ASSY,3 BLADE/ELEC DEICE EQUIPPED/ .	1	2
	96-960022-603	. PROPELLER ASSY,3 BLADE/ELEC DEICE EQUIPPED/ .	1	6
	96-910001-123	. SPINNER ASSY,2 BLADE PROPELLER/WITH GEN/. . .	1	1
	96-910001-65	. SPINNER ASSY,2 BLADE PROPELLER/WITH ALT/. . .	1	1
	96-910002-61	. SPINNER ASSY,2 BLADE PROPELLER.	1	3
- 53	C2285-1P	. SPINNER ASSY,2 BLADE PROPELLER.	1	4
	836-37P	. SPINNER ASSY,3 BLADE PROPELLER.	1	2
	96-960008-1	. SPINNER ASSY,2 BLADE PROPELLER.	1	23
		/ANTI-ICE EQUIPPED/		
	96-960006-608	. SPINNER ASSY,2 BLADE PROPELLER.	1	4
		/ANTI-ICE EQUIPPED/		
	836-36P	. SPINNER ASSY,3 BLADE PROPELLER.	1	2
		/ANTI-ICE EQUIPPED/		
	C-3567-1P	. SPINNER ASSY,3 BLADE PROPELLER.	1	6
		/WITH OR WITHOUT ANTI-ICE/		
	96-960007-612	. SPINNER ASSY,2 BLADE PROPELLER.	1	23
		/ELEC DEICE EQUIPPED/		
	96-960022-25	. SPINNER ASSY,2 BLADE PROPELLER.	1	4
		/ELEC DEICE EQUIPPED/		
	96-960009-606	. SPINNER ASSY,3 BLADE PROPELLER.	1	2
		/ELEC DEICE EQUIPPED/		
	96-960022-27	. SPINNER ASSY,3 BLADE PROPELLER.	1	6
		/ELEC DEICE EQUIPPED/		

NOTE FOR PROP BREAKDOWN SEE CHAPTER 61.
FOR PROP ICE PROTECTION COMPONENTS SEE CHAPTER 30.
FOR EXHAUST SYSTEM SEE CHAPTER 78.

CODES OF EFFECTIVITY

1	TC-1262	2	TC-1255 THRU 1418
3	TC-1255 THRU 1415 EXCEPT TC-1262	4	TC-1416 THRU TC-1607
5	TC-1449 THRU TC-1607	6	TC-1419 THRU TC-1607
7	TC-1255 THRU TC-1607	8	TC-1255
9	TC-1256 THRU TC-1460	10	TC-1461 THRU TC-1607
11	TC-1256 THRU TC-1415	12	TC-1416 THRU TC-1460
13	TC-1255 THRU TC-1460	14	TC-1255 THRU TC-1398 AND TC-1402
15	TC-1399 THRU TC-1607 EXCEPT TC-1402	16	TC-1255 THRU TC-1591
17	TC-1592 THRU TC-1607	18	TC-1255 THRU TC-1501
19	TC-1502 THRU TC-1554	20	TC-1555 THRU TC-1607
21	TC-1255 THRU TC-1476	22	TC-1477 THRU TC-1607
23	TC-1255 THRU TC-1415	24	TC-1255 THRU TC-1385
25	TC-1386 THRU TC-1607		

71-02-01
POWER PLANT
TE-1 THRU TE-849

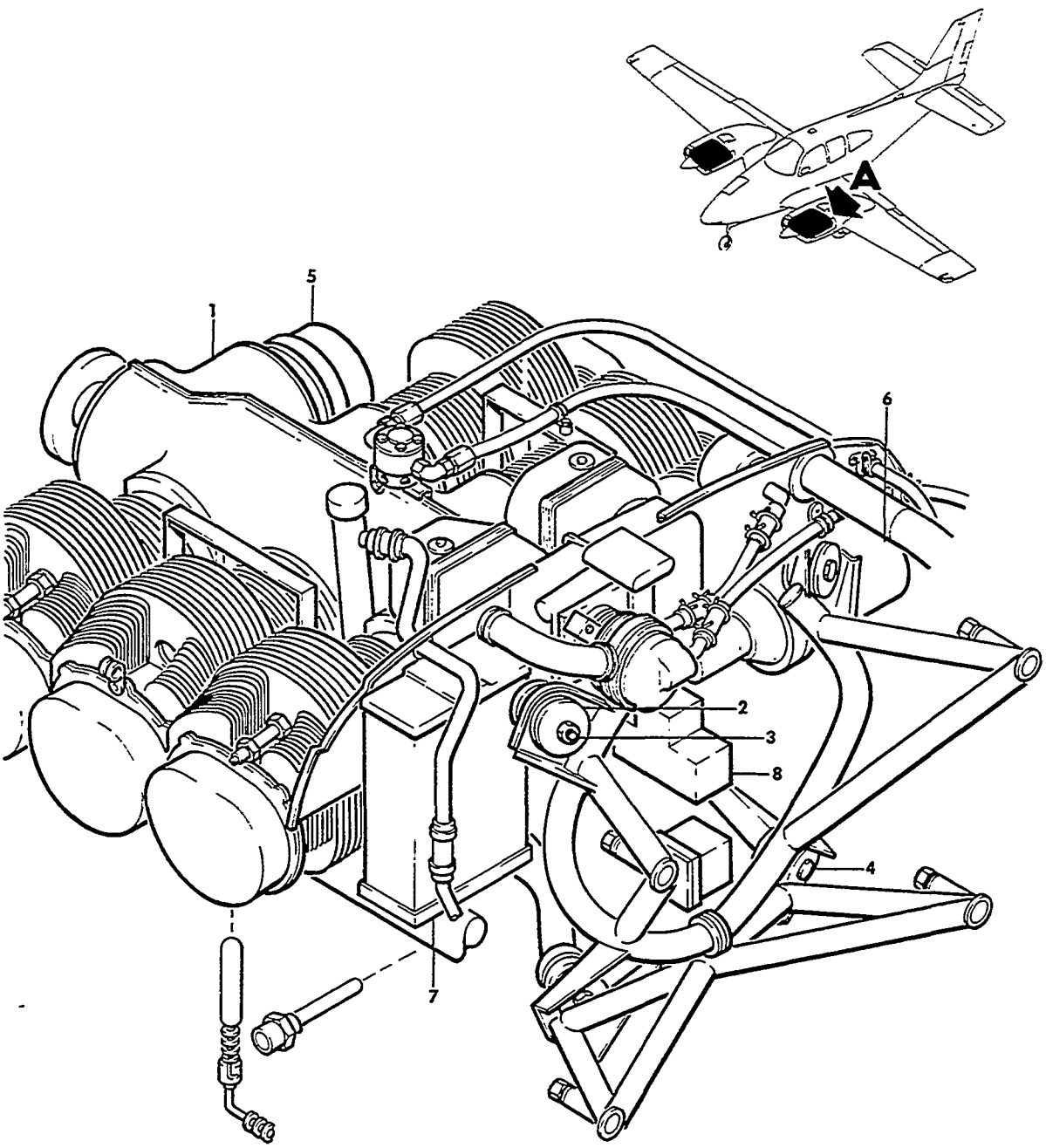

VIEW A

E55-241-37

FIGURE 02-01.POWER PLANT
/SHEET 1 OF 7 SHEETS/

SUB-SECT UNIT & ITEM NO.	PART NO.	DESCRIPTION 1 2 3 4 5 6 7	UNITS PER ASSY	USABLE ON CODE
02-01	96-910002-59	POWER PLANT INSTL,LH/2 BLADE MCCAULEY PROP/ . .	NP	1
	96-910002-60	POWER PLANT INSTL,RH/2 BLADE MCCAULEY PROP/ . .	NP	1
	96-910002-63	POWER PLANT INSTL,LH/3 BLADE MCCAULEY PROP/ . .	NP	1
	96-910002-64	POWER PLANT INSTL,RH/3 BLADE MCCAULEY PROP/ . .	NP	1
	R 96-910002-75	POWER PLANT INSTL,LH/2 BLADE MCCAULEY PROP/ . .	NP	2
	96-910002-76	POWER PLANT INSTL,RH/2 BLADE MCCAULEY PROP/ . .	NP	2
	96-910002-77	POWER PLANT INSTL,LH/3 BLADE MCCAULEY PROP/ . .	NP	3
	96-910002-78	POWER PLANT INSTL,RH/3 BLADE MCCAULEY PROP/ . .	NP	3
	96-910002-601	. ENGINE ASSY,LH.	1	4
	96-910002-2	. ENGINE ASSY,RH.	1	4
- 1	IO-520C	. . ENGINE/SPEC 5A. . . . . /ATTACHING PARTS/	1	4
- 2	J10778-16	. . MOUNT ASSY,ENGINE/SUPERSEDES J10778-1 & J10778-15/ . .	4	4
- 3	AN7-37/M/	. . BOLT,UPPER ENGINE MOUNT	2	4
- 4	96-910023	. . BOLT,LOWER ENGINE MOUNT	2	
	AN960-716	. . WASHER,UPPER/UNDER BOLT HEAD/	2	
	MS20365-720C	. . NUT,UPPER	2	
		——*——		
- 5	1100725	. . . ALTERNATOR/24V,50AMP/DELCO/SEE. . . . . S.I. 0184-241 TO REPLACE WITH ALT9405	1	5
	ALT9405	. . . ALTERNATOR/24V,50AMP/PRESTOLITE/SEE . . . CHAPTER 24/	1	6
	AN123901	. . . O RING,ALTERNATOR	1	4
	629436	. . . GASKET/ALTERNATOR TO ENGINE/.	1	4
- 6	1108234	. . . STARTER ASSY/DELC-REMY/SUPERSEDES 627841/ /NO BREAKDOWN AVAILABLE/	1	4
	MHJ4002	. . . STARTER ASSY/PRESTOLITE/ALT FOR 1108234/. SEE CHAPTER 80/	1	4
	MHJ4003	. . . STARTER ASSY/PRESTOLITE/ALT FOR 1108234 & MHJ4002/SEE CHAPTER 80/ /ATTACHING PARTS/	1	4
	2441	. . . NUT	2	
	401507	. . . WASHER.	2	
		——*——		
	MS9021-038	. . . O RING,STARTER ASSY TO ADAPTER.	1	4
	630916	. . . GASKET/STARTER ADAPTER TO CRANKCASE/. . .	1	4
- 7	635996	. . . COOLER,OIL/SUPERSEDES 634063/ALTERNATE. . FOR 633288/	1	4
	633288	. . . COOLER ASSY,OIL/ALTERNATE 635996/ . . . . /ATTACHING PARTS/	1	4
	2441	. . . NUT	4	
	AN936A616	. . . WASHER,LOCK	4	
	2474	. . . WASHER.	4	
		——*——		
	MS9021-017	. . . O RING,OIL COOLER TO ENGINE	2	4
- 8	638154-2A4	. . . PUMP ASSY,ENGINE DRIVEN FUEL/SUPERSEDES . 630947-2/	1	4
	630763	. . . GASKET,FUEL PUMP TO CRANKCASE	1	4

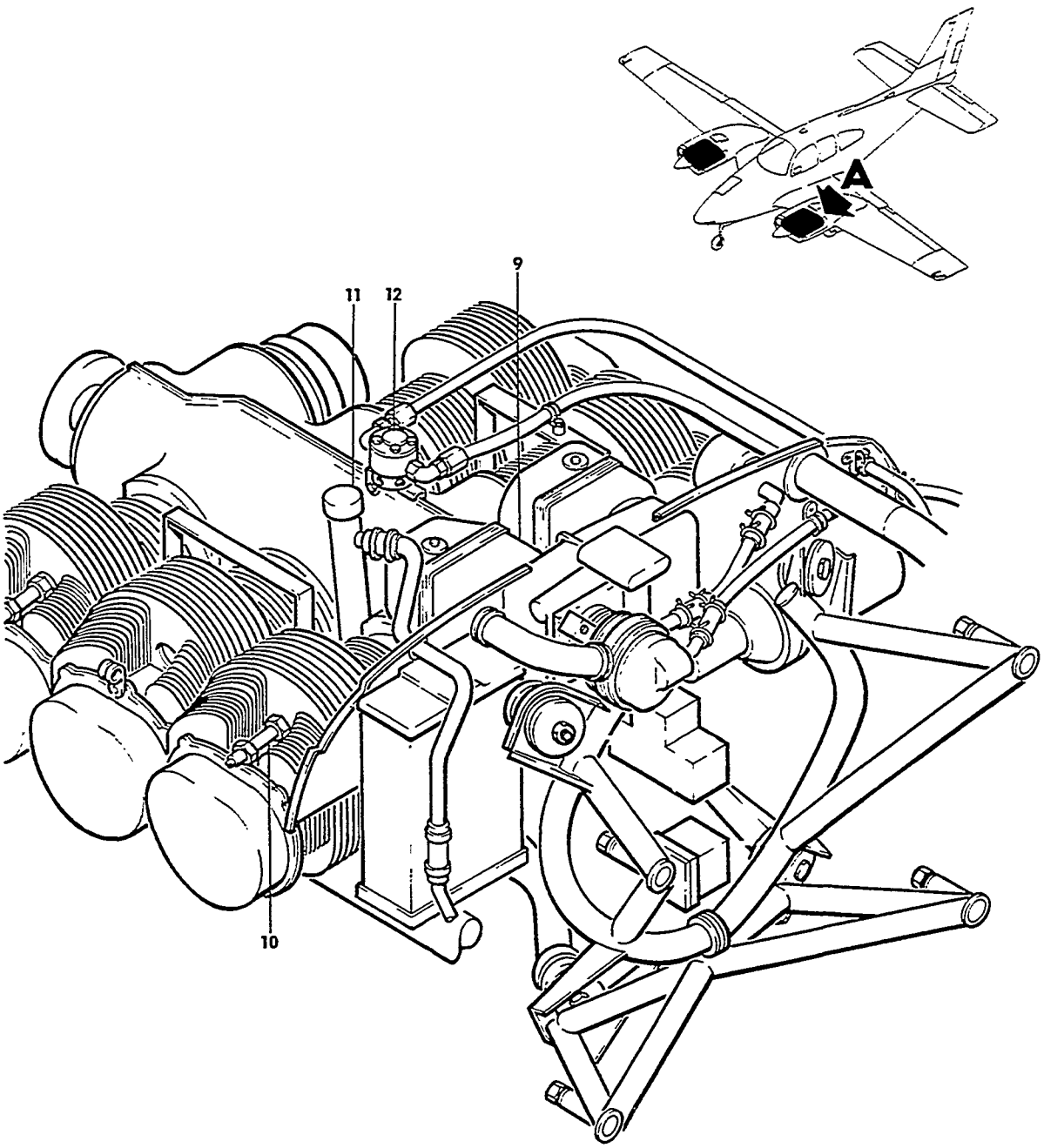

VIEW A

ESS-241-38

FIGURE 02-01.POWER PLANT
/SHEET 2 OF 7 SHEETS/

ATA CODE & INDEX NO.	PART NO.	DESCRIPTION 1 2 3 4 5 6 7	UNITS PER ASSY	USABLE ON CODE
02-01 - 9	S6RN1201	. . . MAGNETO ASSY,LH/10-349220-1/.	1	7
	S6RN1205	. . . MAGNETO ASSY,RH/10-349260-1/.	1	7
	10-382585	. . . . POINTS,CONTACT/LH MAGNETO ONLY/	1	7
	10-382584	. . . . POINTS,CONTACT/RH & LH MAGNETO/	1	7
	10-349276	. . . . CAPACITOR/SUPERSEDES 10-163131/	1	7
	625765	. . . MAGNETO ASSY/SUPERSEDES 662/.	2	8
	15-48A	. . . . POINTS,CONTACT.	1	8
	14-48A	. . . . CONDENSOR	1	8
	636141	. . . MAGNETO ASSY/SUPERSEDES 680/MAY BE USED . AS SPARES REPLACEMENT FOR 625765/	2	9
	15-48A	. . . . POINTS.	1	9
	14-48A	. . . . CONDENSOR	1	9
	10-349350-1	. . . MAGNETO ASSY/S6RN1225/SEE NOTE/	2	4
		NOTE 10-349350-1 MAGNETO MAY BE USED AS SPARES REPLACEMENT FOR 636141,625765,S6RN1205 & S6RN1201 MAGNETOS IF REPLACED IN PAIRS AND OLD MAGNETO HARNESS WIRE IS REPLACED BY P/N 636603 MAGNETO WIRE HARNESS.		
	636951	. . . HARNESS ASSY,MAGNETO WIRE	1	7
	633311	. . . HARNESS ASSY,MAGNETO WIRE/636140/USE. . . WITH SLICK MAGNETO/	1	10
	636603	. . . HARNESS ASSY,MAGNETO WIRE/USE WITH. . . . 10-349350-1 MAGNETOS ONLY/	1	4
- 10	RHB32N	. . . SPARK PLUG,MASSIVE/CHAMPION/.	12	4
	RHB36P	. . . SPARK PLUG,FINE WIRE/CHAMPION/.	12	4
	AC271	. . . SPARK PLUG,MASSIVE/AC/.	12	4
	AC281	. . . SPARK PLUG,FINE WIRE/AC/.	12	4
	534750	. . . GASKET,MAGNETO TO CRANKCASE	2	4
	OF81A	. . . FILTER ADAPTER ASSY,OIL/SUPERSEDES OF9A/.	1	11
	E3330	. . . ELEMENT,OIL FILTER/INCLUDES GASKET/ . . . /SUPERSEDES 632379 & 11A/	1	11
	632399	. . . FILTER ASSY,OIL	1	12
	632266	. . . GASKET,OIL FILTER	1	12
	632881	. . . ADAPTER ASSY,OIL FILTER	1	12
- 11	633233-5	. . . DIPSTICK,LH ENGINE OIL.	1	4
	631970-3L	. . . DIPSTICK,LH ENGINE OIL/ALT FOR 633233-5/.	1	4
	633233-6	. . . DIPSTICK,RH ENGINE OIL/SUPERSEDES 631970-4R/	1	4
- 12	639177A1	. . . FUEL INJECTION ASSY,COMPLETE/SUPERSEDES . EQ5966C/	1	4
		NOTE FOR FUEL INJECTION SYSTEM & OTHER ENGINE PARTS,SEE TELEDYNE CONTINENTAL MOTORS ILLUSTRATED PARTS CATALOG FOR IO-520 SERIES AIRCRAFT ENGINES,FORM NO. X-30040A.		

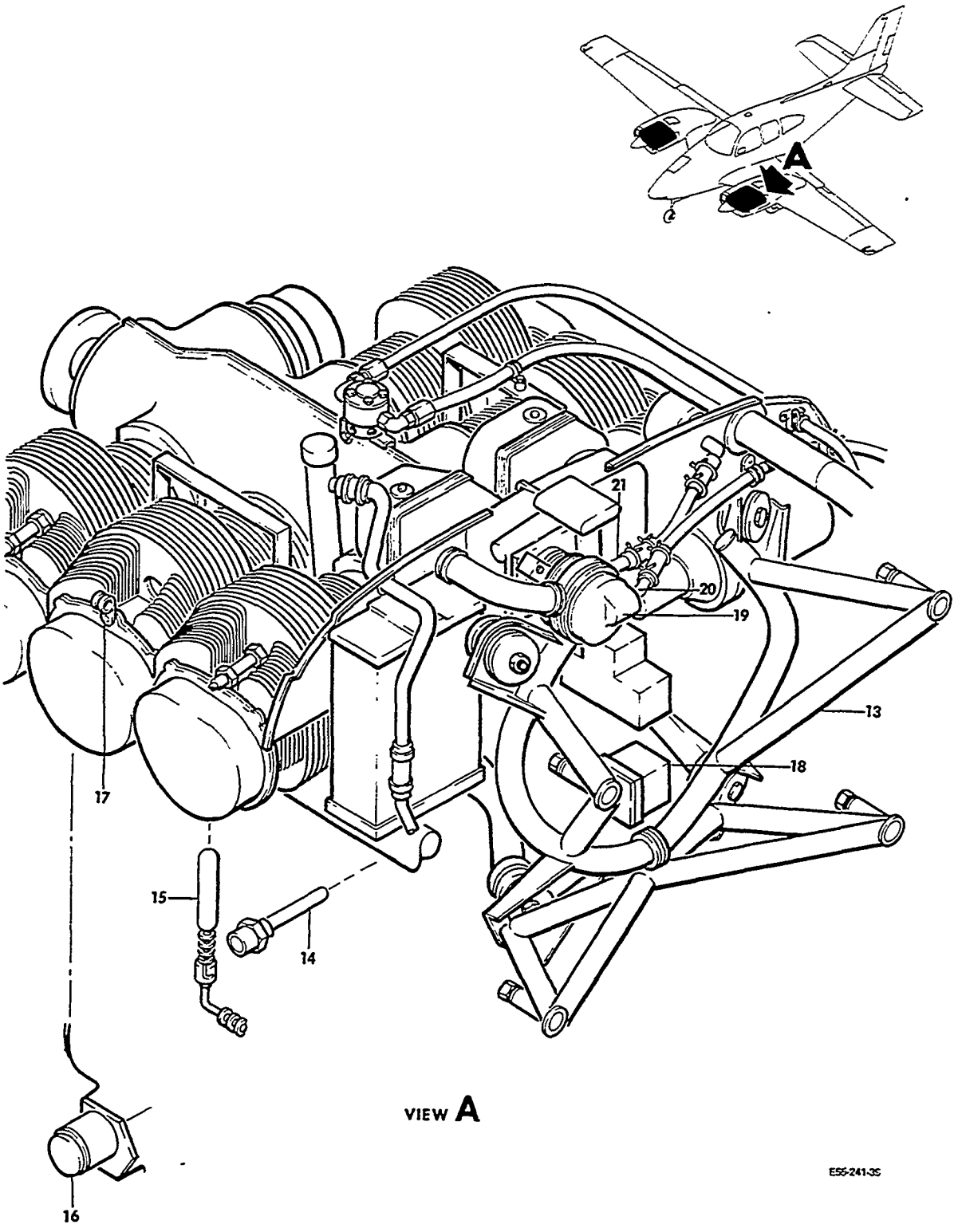

FIGURE 02-01.POWER PLANT
/SHEET 3 OF 7 SHEETS/

ATA CODE & INDEX NO.	PART NO.	DESCRIPTION 1 2 3 4 5 6 7	UNITS PER ASSY	USABLE ON CODE
02-01 - 13	96-910010-57	. . MOUNT ASSY,ENGINE/SUPERSEDES 96-910010-1/ . /ATTACHING PARTS/	1	4
	NAS146-56/M/	. . BOLT,ENGINE MOUNT UPPER/ALT MS20006-46/ . .	2	4
	MS20006-46/M/	. . BOLT,ENGINE MOUNT UPPER/ALT.NAS146-56/. . .	2	4
	NAS146-52/M/	. . BOLT,ENGINE MOUNT LOWER/ALT.MS20006-42/ . .	2	4
	MS20006-42/M/	. . BOLT,ENGINE MOUNT LOWER/ALT.NAS146-52/. . .	2	4
	MS20002C6	. . WASHER/UNDER BOLT HEAD/	4	
	AN960-616	. . WASHER/MAX OF 2 UNDER EACH NUT/	8	
	EB064	. . NUT	4	
		——*——		
- 14	MS28034-1	. . BULB,OIL TEMPERATURE.	1	4
	AN900-10	. . GASKET,OIL TEMPERATURE BULB	1	4
	AN4076-1	. . FITTING,CYLINDER HEAD TEMPERATURE BULB. . .	1	4
- 15	AN5546-1	. . BULB,CYLINDER HEAD TEMPERATURE.	1	4
- 16	96-380030-1	. . GOVERNOR,PROPELLER/SEE CHAPTER 61/.	1	4
		NOTE 96-380030-1 IS SPARES REPLACEMENT FOR 96-380030 GOVERNOR AND MUST BE INSTALLED ON BOTH ENGINES.		
	96-380030	. . GOVERNOR,PROPELLER/SEE CHAPTER 61/.	1	4
- 17	M1779	. . CLAMP,MAGNETO WIRE.	2	10
- 18	96-389000	. . GENERATOR TACHOMETER.	1	4
		NOTE FOR ENGINE BREATHER AND ENGINE DRAIN PORTIONS OF THE POWER PLANT ASSY SEE CHAPTER 71 72-01.		
- 19	G455	. . PUMP,VACUUM/USE WITHOUT SURFACE DEICE/. . .	1	1
	32-456-900	. . . COUPLING,PUMP DRIVE	1	1
	232CW	. . PUMP,PRESSURE/USE WITHOUT SURFACE DEICER/ . /SUPERSEDES 200CW/SEE S.I. NO. 0646-190	1	2
	50-380090	. . PUMP,VACUUM/USE WITH SURFACE DEICER/. . . .	1	1
	432CW12	. . PUMP,PRESSURE/USE WITH SURFACE DEICER . . . OR H-14 AUTOPILOT/SEE S.I. NO. 0646-190	1	2
	AN125964	. . STUD/USE FOR VACUUM PUMP W/O DEICER/. . . .	1	1
		NOTE THE 242CW PUMP MAY BE USED AS SPARES REPLACEMENT FOR 232CW OR 200CW PUMP,AND THE 442CW12 PUMP MAY BE USED AS THE SPARES REPLACEMENT FOR THE 432CW12 PUMP ONLY WHEN THE 58-910024-1 COOLING DUCT IS INSTALLED. SEE S.I. NO. 0646-190 FOR KIT.		
	HE642	. . SEPARATOR ASSY,OIL/USE WITH VACUUM PUMP . . AND WITHOUT SURFACE DEICER	1	1
	96-389006	. . SEPARATOR ASSY/ALT FOR HE642/	1	1
	96-380029	. . SEPARATOR ASSY,OIL/USE WITH VACUUM PUMP . . AND WITH SURFACE DEICER/ /ATTACHING PARTS/	1	1
	AN520-10A	. . SCREW	2	
	AN960-10	. . WASHER.	2	
	MS20365-1032C	. . NUT	2	
		——*——		
- 20	AN840-8	. . FITTING,VACUUM PUMP	1	1
	1K10-6-12	. . FITTING,PRESSURE PUMP/W/O SURFACE DEICER/ .	2	2
	1K10-8-12	. . FITTING,PUMP/WITH SURFACE DEICER/	1	2
	1K24-2	. . FITTING,PUMP/WITH SURFACE DEICER/	1	2
- 21	A1000C10-6	. . NIPPLE,VACUUM PUMP.	1	1

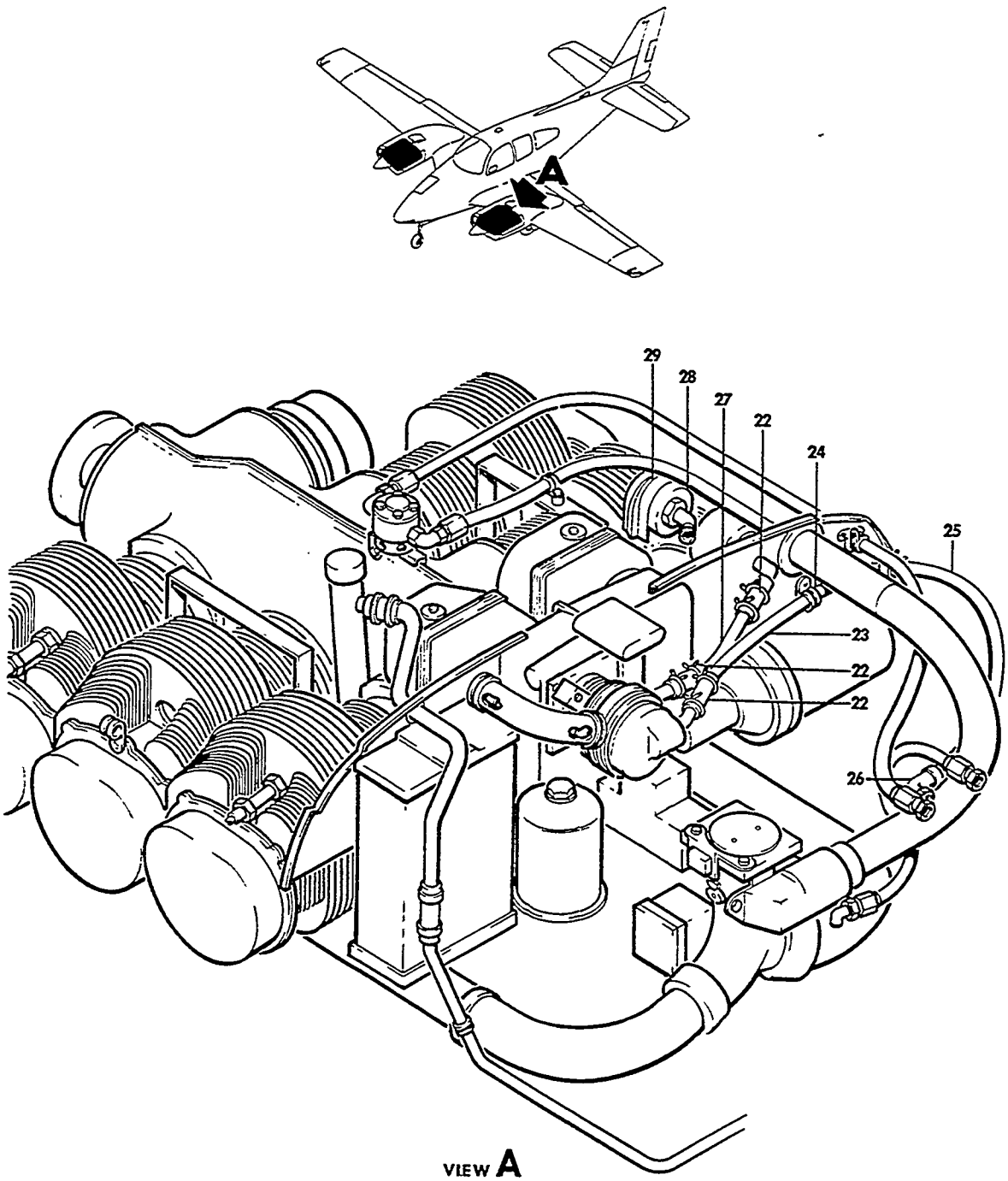

FIGURE 02-01.POWER PLANT
/SHEET 4 OF 7 SHEETS/

ATA CODE & INDEX NO.	PART NO.	DESCRIPTION 1 2 3 4 5 6 7	UNITS PER ASSY	USABLE ON CODE
02-01 - 22	96-910002-85	HOSE,PRESSURE PUMP.	3	2
	96-910002-51	HOSE,VACUUM PUMP TO OIL SEPARATOR	1	1
	CS-A18	CLAMP,HOSE.	3	2
- 23	96-910002-87	TUBE.	1	2
	96-910002-53	TUBE ASSY,VACUUM.	1	1
- 24	AN742-10	CLAMP,TUBE SUPPORT.	1	1
		/ATTACHING PARTS/		
	AN520-10	SCREW	1	
	AN960-10	WASHER.	3	
	MS20365-1032	NUT	1	
		----*----		
	AN742-14C	CLAMP,TUBE SUPPORT.	1	2
		/ATTACHING PARTS/		
	AN515-8R7	SCREW	1	
	AN960-8	WASHER.	1	
	MS20365-832	NUT	1	
		----*----		
- 25	96-910002-49	HOSE,VACUUM TO FIREWALL	1	1
	96-910002-89	HOSE,PRESSURE PUMP TO FIREWALL.	1	2
- 26	AN842-10D	FITTING,FIREWALL/LH ONLY/	1	1
	AN822-10D	ELBOW,FIREWALL/RH ENGINE/	1	1
	1K43-12-12	FITTING,FIREWALL.	1	2
	AN960PD1716	WASHER,FIREWALL FITTING	2	2
- 27	96-910002-83	TUBE,PRESSURE PUMP INTAKE	1	2
	96-910002-41	HOSE,OIL SEPARATOR EXHAUST.	1	1
		/ATTACHING PARTS/		
	A8	CLAMP	2	1
		----*----		
- 28	1J1-5	FILTER,INTAKE AIR	1	2
	AN960PD1716	WASHER.	2	2
- 29	96-910040-1	COVER	1	2
		/ATTACHING PARTS/		
	AN3	BOLT.	2	
	AN960-10	WASHER.	2	
	MS20365-1032	NUT	2	
		----*----		
	96-910041-1	BRACKET	1	1

NOTE 1J1-5 FILTER MAY BE REPLACED BY 1J2-5 FILTER IF 96-910041-1 COVER & ATTACHING PARTS ARE REPLACED BY 58-910021-1 COVER, THE 96-910041-1 BRACKET IS REMOVED AND THE FOLLOWING ATTACHING PARTS FOR COVER ARE FURNISHED;1 EA. 100696A-ZC008 SPACER, AN315-3R NUT,AN936A10 WASHER & 2 EA AN970-3 WASHER. FOR REPLACEABLE FILTER CARTRIDGE IN THE 1J2-5 FILTER,ORDER PIN D9-14-1.

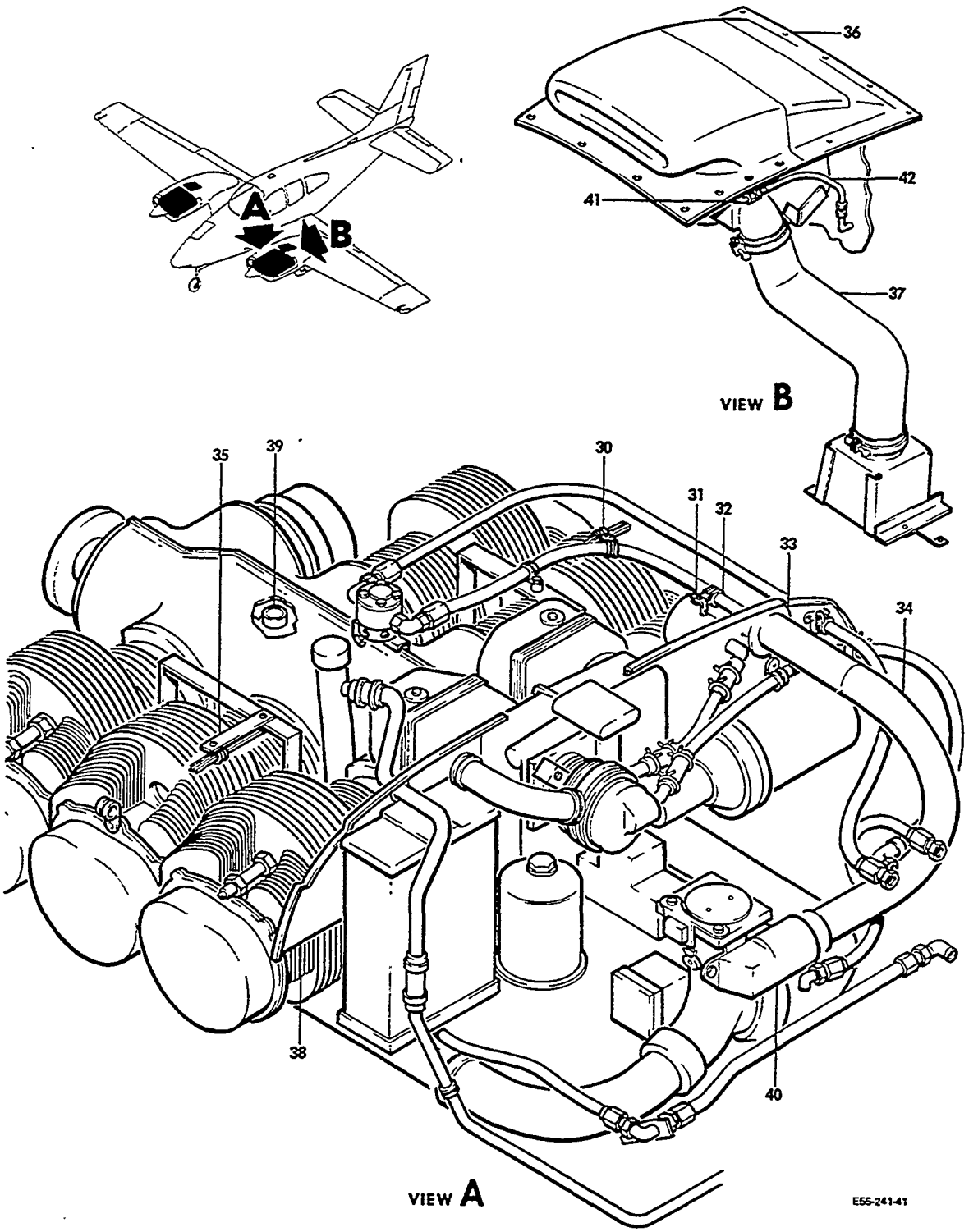

FIGURE 02-01.POWER PLANT
/SHEET 5 OF 7 SHEETS/

SUB-SECT UNIT & ITEM NO.	PART NO.	DESCRIPTION 1 2 3 4 5 6 7	UNITS PER ASSY	USABLE ON CODE
02-01 - 30	MS21919DG11	. . CLAMP,MAG WIRE HARNESS & FUEL LINE SUPPORT.	1	4
	MS21919DG8	. . CLAMP,MAG WIRE HARNESS & FUEL LINE SUPPORT.	1	4
		/ATTACHING PARTS/		
	AN520-10R	. . SCREW	1	
	MS20365-1032	. . NUT	1	
		——*——		
- 31	AN743-6	. . CLIP,FUEL LINE SUPPORT.	1	4
- 32	MS21919DG8	. . CLAMP,FUEL LINE SUPPORT	1	4
		/ATTACHING PARTS/		
	AN520-10R	. . SCREW	1	
	AN960-10L	. . WASHER.	1	
	MS20365-1032C	. . NUT	1	
		——*——		
- 33	35-910004-7	. . WASHER,FLEX DUCT FLANGE BACK UP	1	4
		/ATTACHING PARTS/		
	AN515-8R	. . SCREW	5	
	AN960-8	. . WASHER.	5	
	MS20365-832	. . NUT	5	
		——*——		
- 34	115167CX2060845	. . DUCT,FUEL METERING UNIT BLAST	1	4
		/ATTACHING PARTS/		
	AN515-832	. . SCREW	4	
	MS20365-832	. . NUT	4	
	TY28M	. . TIE,BLAST DUCT.	1	
		——*——		
- 35	58-910019-1	. . ANGLE,MAG WIRE HARNESS SUPPORT/LH ONLY/ . .	1	2
		/ATTACHING PARTS/		
	AN520-10R	. . SCREW	1	
	AN960-10L	. . WASHER.	1	
	MS20365-1032	. . NUT	1	
		——*——		
	MS21919DG11	. . CLAMP/MAG WIRES ON LH,FUEL LINE ON RH/. . .	1	2
	MS21919DG8	. . CLAMP,FUEL LINE/RH ONLY/.	1	2
		/ATTACHING PARTS/		
	AN520-10R	. . SCREW	1	
	AN960-10L	. . WASHER.	1	
	MS20365-1032C	. . NUT	1	
		——*——		
- 36	96-919101	. . INDUCTION SYSTEM INSTL,LH/SEE 71-66-01/ . .	NP	4
	96-919101-115	. . INDUCTION SYSTEM INSTL,RH/SEE 71-66-01/ . .	NP	4
- 37	96-910024	. . ALTERNATE AIR INSTL/SEE 71-66-01/	NP	4
- 38	96-910020	. . BAFFLE INSTL,ENGINE/SEE 71-62-01/	NP	4
	96-950002-79	. . EXHAUST SYSTEM INSTL,LH/SEE 78-12-01/ . . .	NP	4
		SEE CHAPTER 78-13-01 FOR SPARES		
	96-950002-81	. . EXHAUST SYSTEM INSTL,RH/SEE 78-12-01/ . . .	NP	4
		SEE CHAPTER 78-13-01 FOR SPARES		
- 39	LOT6A10	. . DUCT,ALTERNATOR COOLING	1	4
		/ATTACHING PARTS/		
	NAS397-24	. . CLAMP	1	
		——*——		
- 40	96-910030	. . THROTTLE WARNING INSTL/SEE CHAPTER 76/. . .	NP	4
- 41	MS20822-4D	. . ELBOW/RH ENGINE ONLY/	1	4
- 42	AN6270-4-11	. . HOSE/RH ENGINE ONLY/.	1	4

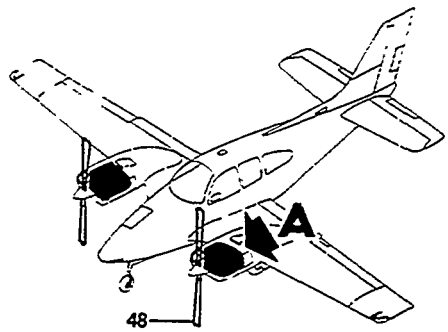

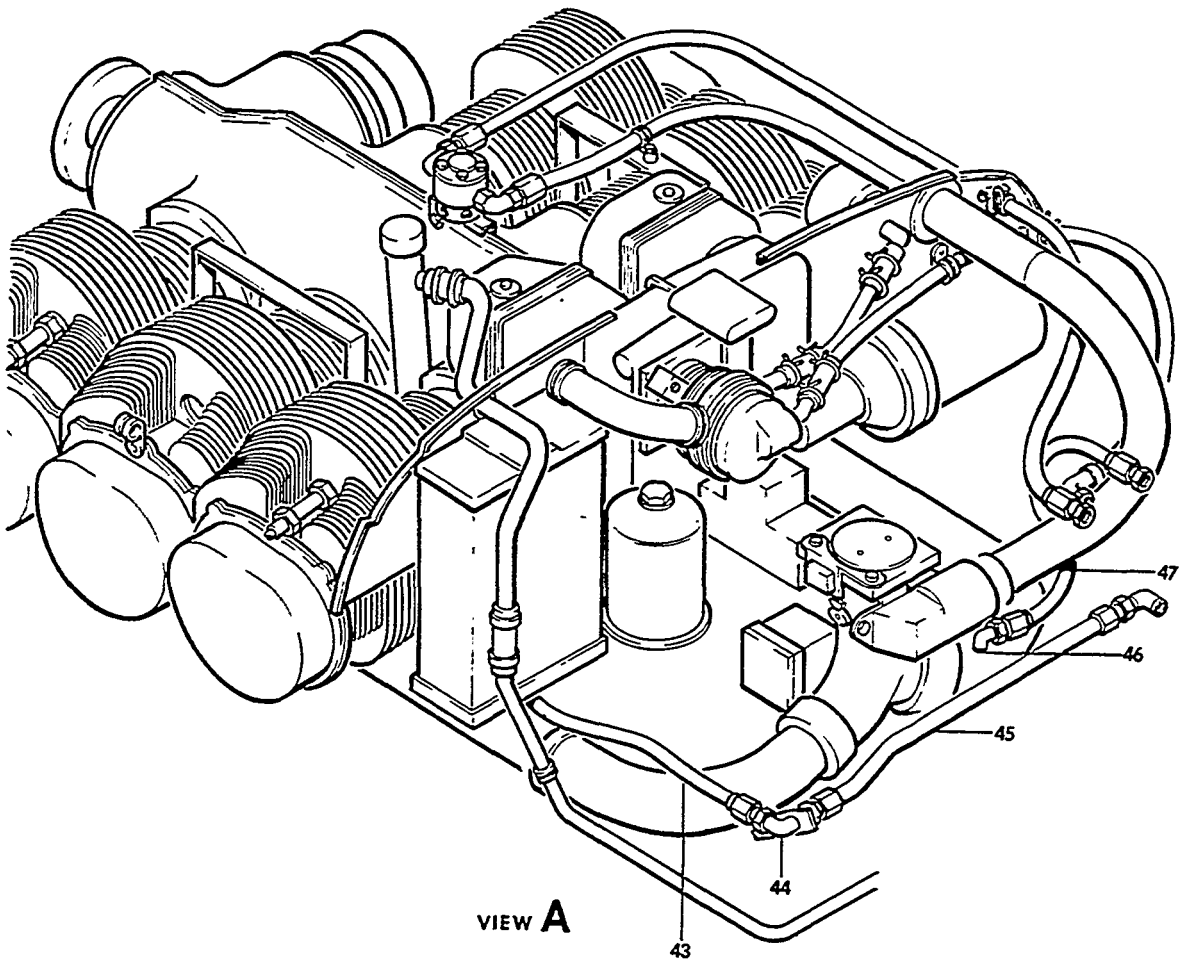

FIGURE 02-01.POWER PLANT
/SHEET 6 OF 7 SHEETS/

ATA CODE & INDEX NO.	PART NO.	DESCRIPTION 1 2 3 4 5 6 7	UNITS PER ASSY	USABLE ON CODE
02-01 - 43	MS28741-4-0126	. . HOSE ASSY,LH OIL PRESSURE	1	4
	MS28741-4-0126	. . HOSE ASSY,RH ENGINE OIL PRESSURE.	1	4
- 44	AN833-4	. . ELBOW,LH OIL PRESSURE	1	4
	AN924-4D	. . NUT	1	4
	AN960-716L	. . WASHER.	1	4
- 45	96-910002-9	. . TUBE ASSY,LH OIL PRESSURE	1	4
- 46	AN822-4D	. . FITTING,LH MANIFOLD PRESSURE.	1	4
	AN816-4D	. . FITTING,RH MANIFOLD PRESSURE.	1	4
- 47	AN6270-4-11	. . HOSE ASSY,LH MANIFOLD PRESSURE.	1	4
	AN6270-4-28	. . HOSE ASSY,RH MANIFOLD PRESSURE.	1	4
	AN931-4-7	. . GROMMET/MAGNETO WIRE THRU BAFFLE/	1	4
	96-910001-51	. . BRACKET/ATTACHED UNDER ENGINE SUMP BOLTS/ .	3	4
	96-910002-11	. . TUBE ASSY,VACUUM/ON RH FIREWALL ONLY/ . . .	1	1
	AN822-10D	. . ELBOW,RH VACUUM LINE.	1	1
	AN838-10D	. . ELBOW,FIREWALL VACUUM LINE/INBD/. . . . . /ATTACHING PARTS/	1	1
	AN924-10D	. . NUT	1	
	AN960-1416	. . WASHER.	1	
		----*----		
	6041H190	. . RELAY,STARTER/LH INSTALLED ON AFT OUTBD . . SIDE OF FIREWALL,RH RELAY INSTALLED ON RH SIDE OF STA.49.00 BULKHEAD/ /ATTACHING PARTS/	1	13
	AN4-11A	. . BOLT.	2	1
	AN960-416	. . WASHER.	2	
	MS20365-428C	. . NUT	2	
		----*----		
	10-320297-2	. . CLAMP,MAG WIRE/FWD RH CYLINDER/	1	7
	96-910022	. . BLAST TUBE ASSY,FUEL PUMP/ATTACH TO ENGINE. ACCESSORY DRIVE PAD WITH BOLTS ON ENGIN	1	4
- 48	2AF34C5578FFO	. PROPELLER ASSY/MCCAULEY 2 BLADE,NO DEICE/ . .	2	15
	BHCC2YF2CHFFC8 * 4756	.PROPELLER ASSY/HARTZELL 2 BLADE,. . . . . NO DEICE/	2	4
	96-960006-604	. PROPELLER ASSY/MCCAULEY 2 BLADE/ALCOHOL . . . ANTI-ICE/	2	15
	96-960008-610	. PROPELLER ASSY/HARTZELL 2 BLADE/ALCOHOL . . . ANTI-ICE/	2	15
	96-960007-606	. PROPELLER ASSY/MCCAULEY 2 BLADE/ELECTRIC. . . DEICE/	2	15
	96-960021-609	. PROPELLER ASSY/HARTZELL 2 BLADE/ELECTRIC. . . DEICE/	2	4
	3AF32C7582NB6	. PROPELLER ASSY/MCCAULEY 3 BLADE/NO DEICE/ . .	2	4
	PHCC3YF2FFC766 * 32R	. PROPELLER ASSY/HARTZELL 3 BLADE/. . . . . /NO DEICE/	2	4
	96-960008-601	. PROPELLER ASSY/MCCAULEY 3 BLADE/ALCOHOL . . . ANTI-ICE/	2	15
	96-960008-611	. PROPELLER ASSY/HARTZELL 3 BLADE/ALCOHOL . . . ANTI-ICE/	2	4
	96-960010-606	. PROPELLER ASSY/MCCAULEY 3 BLADE/ELECTRIC. . . DEICE/	2	4
	96-960020-602	. PROPELLER ASSY/HARTZELL 3 BLADE/ELECTRIC. . . DEICE/	2	4

NOTE MCCAULEY PROPELLERS AND HARTZELL PROPELLERS ARE INTERCHANGEABLE IF BOTH ENGINES HAVE SAME VENDOR PROPELLERS INSTALLED ALONG WITH MATCHING SPINNERS. SEE CHAPTER 61 FOR PROPELLER BREAKDOWN & CHAPTER 30 FOR PROP ANTI-ICE AND DEICE.

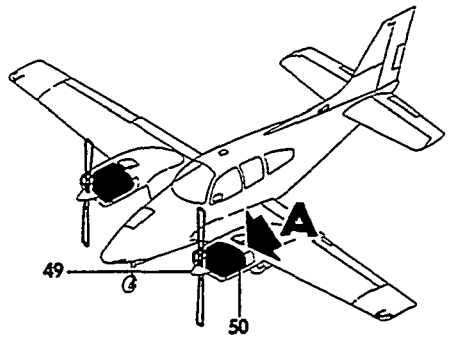

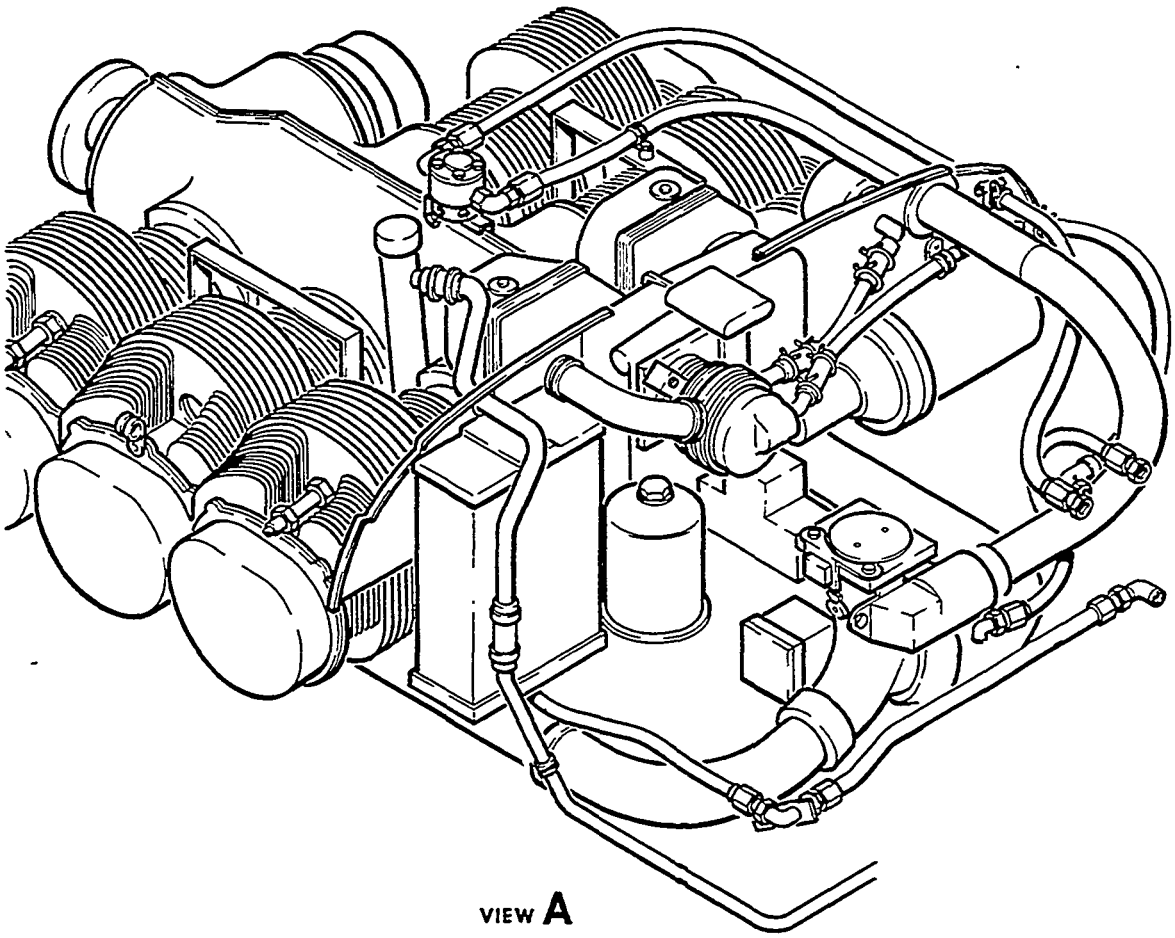

E55-241-43

FIGURE 02-01.POWER PLANT
/SHEET 7 OF 7 SHEETS/

ATA CODE & INDEX NO.	PART NO.	DESCRIPTION 1 2 3 4 5 6 7	UNITS PER ASSY	USABLE ON CODE
02-01 - 49	96-910002-61	. SPINNER ASSY/MCCAULEY 2 BLADE PROP/NO DEICE/.	2	15
	C2285-1P	. SPINNER ASSY/HARTZELL 2 BLADE PROP/ . . . . . /USE WITH OR WITHOUT ALCOHOL ANTI-ICE/	2	4
	96-960008-1	. SPINNER ASSY/MCCAULEY 2 BLADE PROP/ALCOHOL. . ANTI-ICE/	2	15
	96-960007-608	. SPINNER ASSY/MCCAULEY 2 BLADE PROP/ELECTRIC . DEICER/	2	15
	96-960021-9	. SPINNER ASSY/HARTZELL 2 BLADE PROP/ELECTRIC . DEICER/	2	4
	96-910002-65	. SPINNER ASSY/MCCAULEY 3 BLADE PROP/NO DEICE/.	2	4
	C3567-1P	. SPINNER ASSY/HARTZELL 3 BLADE PROP/ . . . . . /USE WITH OR WITHOUT ALCOHOL ANTI-ICE/	2	4
	96-960008-15	. SPINNER ASSY/MCCAULEY 3 BLADE PROP/ . . . . . /ALCOHOL ANTI-ICER/	2	15
	96-960010-654	. SPINNER ASSY/MCCAULEY 3 BLADE/ELECTRIC. . . . DEICE/	2	4
	96-960020-9	. SPINNER ASSY/HARTZELL 3 BLADE/ELECTRIC DEICE/	2	4
	D2870	. . BULKHEAD,SPINNER/MCCAULEY 2 BLADE/WITH OR . WITHOUT ELECTRIC DEICER/.	1	15
	D2801	. . BULKHEAD,SPINNER/MCCAULEY 2 BLADE/. . . . . /ALCOHOL ANTI-ICE/	1	15
	C2283	. . BULKHEAD,SPINNER/HARTZELL 2 BLADE/WITH OR . WITHOUT DEICE OR ANTI-ICE/MODIFY FOR DE	1	4
	D3571	. . BULKHEAD,SPINNER/MCCAULEY 3 BLADE/WITH OR . WITHOUT ELECTRIC DEICE/	1	4
	D3608	. . BULKHEAD,SPINNER/MCCAULEY 3 BLADE/ALCOHOL . DE-ICE/	1	4
	C3566-1	. . BULKHEAD,SPINNER/HARTZELL 3 BLADE/WITH OR . WITHOUT DEICE OR ANTI-ICE/MODIFY FOR DE	1	4
- 50	96-910012	COWLING INSTL,ENGINE/SEE 71-12-01/.	NP	14
	96-910012-105	COWLING INSTL,ENGINE/SEE 71-12-01/.	NP	15

NOTE SEE CHAPTER 73 FOR FUEL LINES IN ENGINE SECTION

CODES OF EFFECTIVITY

1	TE-1 THRU TE-451	2	TE-452 THRU TE-848
3	TE-452 THRU TE-849	4	TE-1 THRU TE-849
5	TE-1 THRU TE-649	6	TE-650 THRU TE-849
7	TE-1 THRU TE-724	8	TE-725 THRU TE-798
9	TE-799 THRU TE-849	10	TE-725 THRU TE-849
11	TE-1 THRU TE-105 AND TE-109	12	TE-106 THRU TE-849 EXCEPT TE-109
13	TE-1 THRU TE-677	14	TE-1 THRU TE-715
15	TE-716 THRU TE-849		

"END"

71-02-02
POWER PLANT
TE-850 THRU TE-942,EXCEPT TE-938

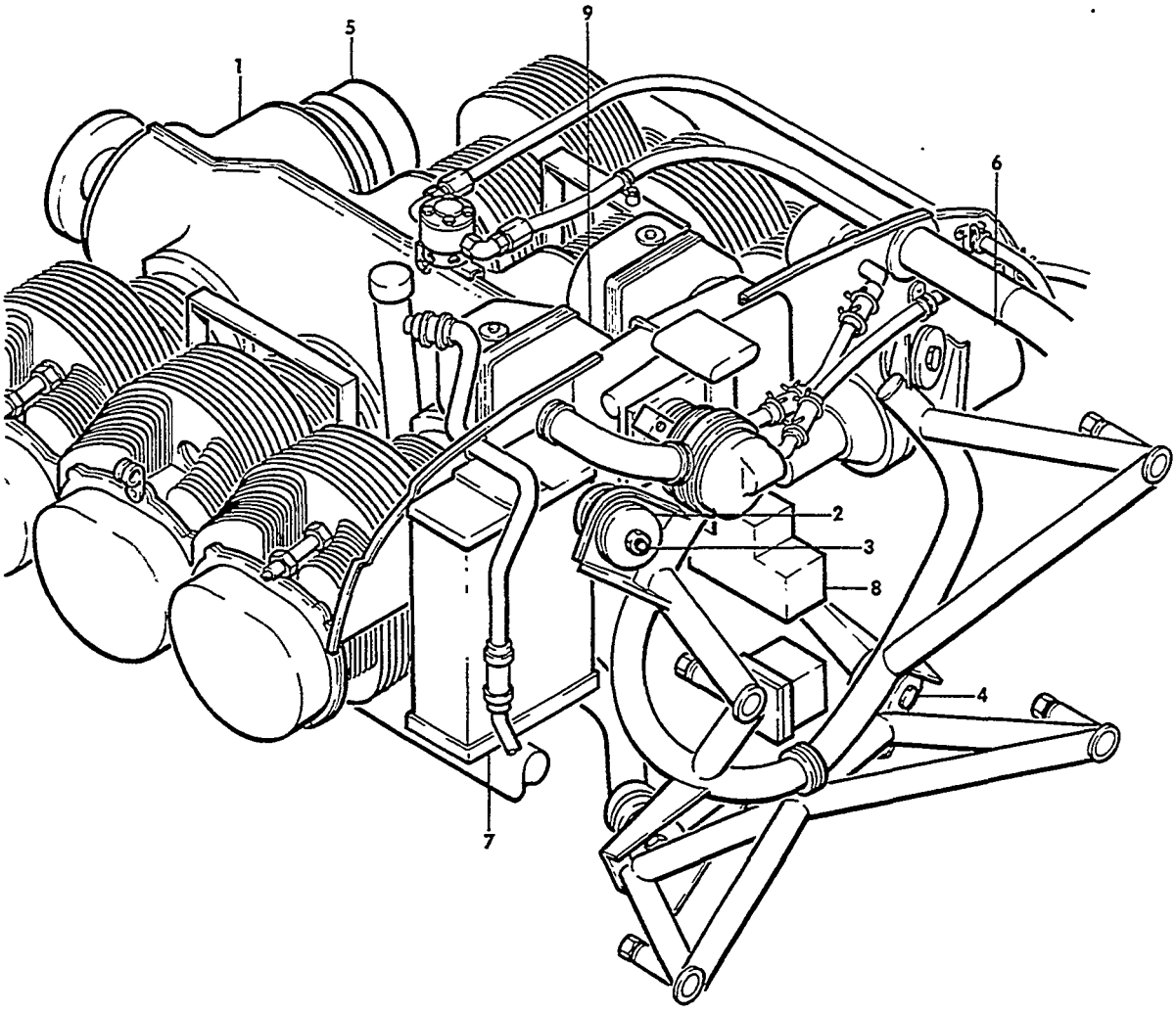

E55-241-53

FIGURE 02-02.POWER PLANT
/SHEET 1 OF 6 SHEETS/

SUB-SECT UNIT & ITEM NO.	PART NO.	DESCRIPTION 1 2 3 4 5 6 7	UNITS PER ASSY	USABLE ON CODE
02-02	R 96-910002-79	POWER PLANT INSTL,LH/2 BLADE HARTZELL PROP/ . .	NP	1
	96-910002-80	POWER PLANT INSTL,RH/2 BLADE HARTZELL PROP/ . .	NP	1
	96-910002-81	POWER PLANT INSTL,LH/3 BLADE HARTZELL PROP/ . .	NP	1
	96-910002-82	POWER PLANT INSTL,RH/3 BLADE HARTZELL PROP/ . .	NP	1
	96-910002-601	. ENGINE ASSY,LH.	1	1
	96-910002-602	. ENGINE ASSY,RH.	1	1
- 1	IO-520C	. . ENGINE.	1	1
		/ATTACHING PARTS/		
- 2	J10778-16	. . MOUNT ASSY,ENGINE SHOCK	4	1
- 3	AN7-37M	. . BOLT,UPPER ENGINE MOUNT	2	
- 4	96-910023	. . BOLT,LOWER ENGINE MOUNT	2	
	AN960-716	. . WASHER,UPPER MOUNT/UNDER BOLT HEAD/	2	
	MS20365-720C	. . NUT,UPPER MOUNT	2	
- 5	ALT9405	. . . ALTERNATOR/24V,50AMP/PRESTOLITE/.	1	1
		/SEE CHAPTER 24/		
	AN123901	. . . O RING,ALTERNATOR	1	1
	629436	. . . GASKET/ALTERNATOR TO ENGINE/.	1	1
- 6	MHJ4002	. . . STARTER ASSY/PRESTOLITE/SEE CHAPTER 80/ .	1	1
	MHJ4003	. . . STARTER ASSY/PRESTOLITE/ALT FOR MHJ4002/.	1	1
		/SEE CHAPTER 80/		
		/ATTACHING PARTS/		
	2441	. . . NUT	2	
	401507	. . . WASHER.	2	
	MS9021-038	. . . O RING,STARTER ASSY TO ADAPTER.	1	1
	630916	. . . GASKET/STARTER ADAPTER TO CRANKCASE/. . .	1	1
- 7	635996	. . . COOLER,OIL/SUPERSEDES 634063/	1	1
		/ALTERNATE FOR 633288/		
	633288	. . . COOLER ASSY,OIL/ALTERNATE FOR 635996/ . .	1	1
		/ATTACHING PARTS/		
	2441	. . . NUT	4	
	AN936A616	. . . WASHER,LOCK	4	
	2474	. . . WASHER.	4	
	MS9021-017	. . . O RING,OIL COOLER TO ENGINE	2	1
- 8	638154-2A4	. . . PUMP,ENGINE DRIVEN FUEL	1	1
		/SUPERSEDES 630947-2/		
	630763	. . . GASKET,FUEL PUMP TO CRANKCASE	1	1
- 9	636141	. . . MAGNETO ASSY/SUPERSEDES 680/.	2	2
	15-48A	. . . . POINTS.	1	2
	14-48A	. . . . CONDENSOR	1	2
	10-349350-1	. . . MAGNETO ASSY/S6RN1225/SEE NOTE/	2	3
	10-382584	. . . . POINTS,CONTACT.	1	3
	10-349276	. . . . CAPACITOR,MAGNETO/SUPERSEDES 10-163131/	1	3
		NOTE 10-349350-1 MAGNETO MAY BE USED AS SPARES REPLACEMENT FOR 636141 MAGNETO IF REPLACED IN PAIRS & OLD MAGNETO HARNESS WIRE IS REPLACED BY P/N 636603 HARNESS.		
	633311	. . . HARNESS ASSY,MAGNETO WIRE/636140/USE. . .	1	2
		WITH 636141 MAGNETOS/		
	636603	. . . HARNESS ASSY,MAGNETO WIRE	1	3

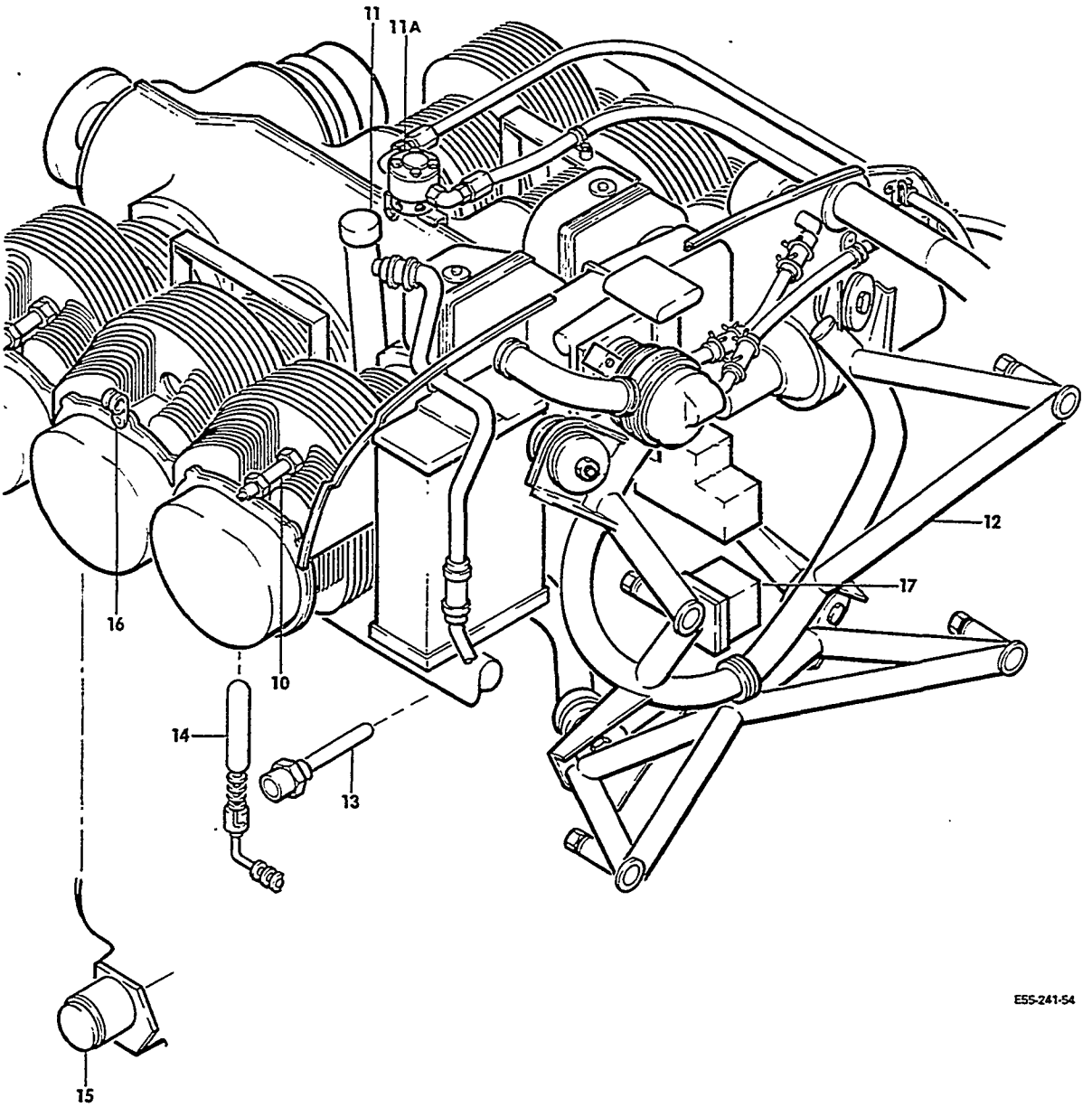

FIGURE 02-02.POWER PLANT
/SHEET 2 OF 6 SHEETS/

ATA CODE & INDEX NO.	PART NO.	DESCRIPTION 1 2 3 4 5 6 7	UNITS PER ASSY	USABLE ON CODE
02-02 - 10	RHB32N	. . . SPARK PLUG,MASSIVE/CHAMPION/.	12	1
	RHB36P	. . . SPARK PLUG,FINE WIRE/CHAMPION/.	12	1
	AC271	. . . SPARK PLUG/AC/.	12	1
	AC281	. . . SPARK PLUG,FINE WIRE/AC/.	12	1
	534750	. . . GASKET,MAGNETO TO CRANKCASE	2	1
	632399	. . . FILTER ASSY OIL	1	1
	632266	. . . GASKET,OIL FILTER	1	1
	632881	. . . ADAPTER ASSY,OIL FILTER	1	1
- 11	633233-5	. . . DIPSTICK,LH ENGINE OIL.	1	1
	631970-3L	. . . DIPSTICK,LH ENGINE OIL/ALT.FOR 633233-5/.	1	1
	633233-6	. . . DIPSTICK,RH ENGINE OIL/SUPERSEDES 631970-4R/	1	1
- 11A	639177A1	. . . FUEL INJECTION ASSY,COMPLETE/SUPERSEDES . EQ5966C/	1	1
		NOTE FOR FUEL INJECTION SYSTEM & OTHER ENGINE PARTS,SEE TELEDYNE CONTINENTAL MOTORS ILLUSTRATED PART CATALOG FOR IO-520 SERIES AIRCRAFT ENGINES/FORM NO. X-30040A/.		
- 12	96-910010-57	. . MOUNT ASSY,ENGINE	1	4
	96-910010-61	. . MOUNT ASSY,ENGINE . . . . . /ATTACHING PARTS/	1	5
	NAS146-56/M/	. . BOLT,ENGINE MOUNT UPPER/ALT.MS20006-46/ . .	2	4
	MS20006-46/M/	. . BOLT,ENGINE MOUNT UPPER/ALT.NAS146-56/. . .	2	4
	NAS146-57/M/	. . BOLT,ENGINE MOUNT/UPPER & LOWER/ALT FOR . . MS20006-46/M/	4	5
	MS20006-46/M/	. . BOLT,ENGINE MOUNT/UPPER & LOWER/ALT.FOR . . NAS146-57/M/	4	5
	NAS146-52/M/	. . BOLT,ENGINE MOUNT LOWER/ALT.MS20006-42/M/ .	2	
	MS20006-42/M/	. . BOLT,ENGINE MOUNT LOWER/ALT.NAS146-52/M/. .	2	4
	MS20002C6	. . WASHER/UNDER BOLT HEAD/	4	
	AN960-616	. . WASHER/MAXIMUM OF 2 UNDER EACH NUT/	8	
	EB064/M/	. . NUT	4	
- 13	MS28034-1	. . BULB,OIL TEMPERATURE.	1	1
	AN900-10	. . GASKET,OIL TEMPERATURE BULB	1	1
	AN4076-1	. . FITTING,CYLINDER HEAD TEMPERATURE BULB. . .	1	1
- 14	AN5546-1	. . BULB,CYLINDER HEAD TEMPERATURE.	1	1
- 15	96-380030-1	. . GOVERNOR,PROPELLER/SEE CHAPTER 61/.	1	1
		NOTE P/N 96-380030-1 IS SPARES REPLACEMENT FOR 96-380030 GOVERNOR AND MUST BE INSTALLED ON BOTH ENGINES		
	96-380030	. . GOVERNOR,PROPELLER/SEE CHAPTER 61/.	1	6
- 16	M1779	. . CLAMP,MAGNETO WIRE.	2	1
- 17	96-389000	. . GENERATOR TACHOMETER.	1	1

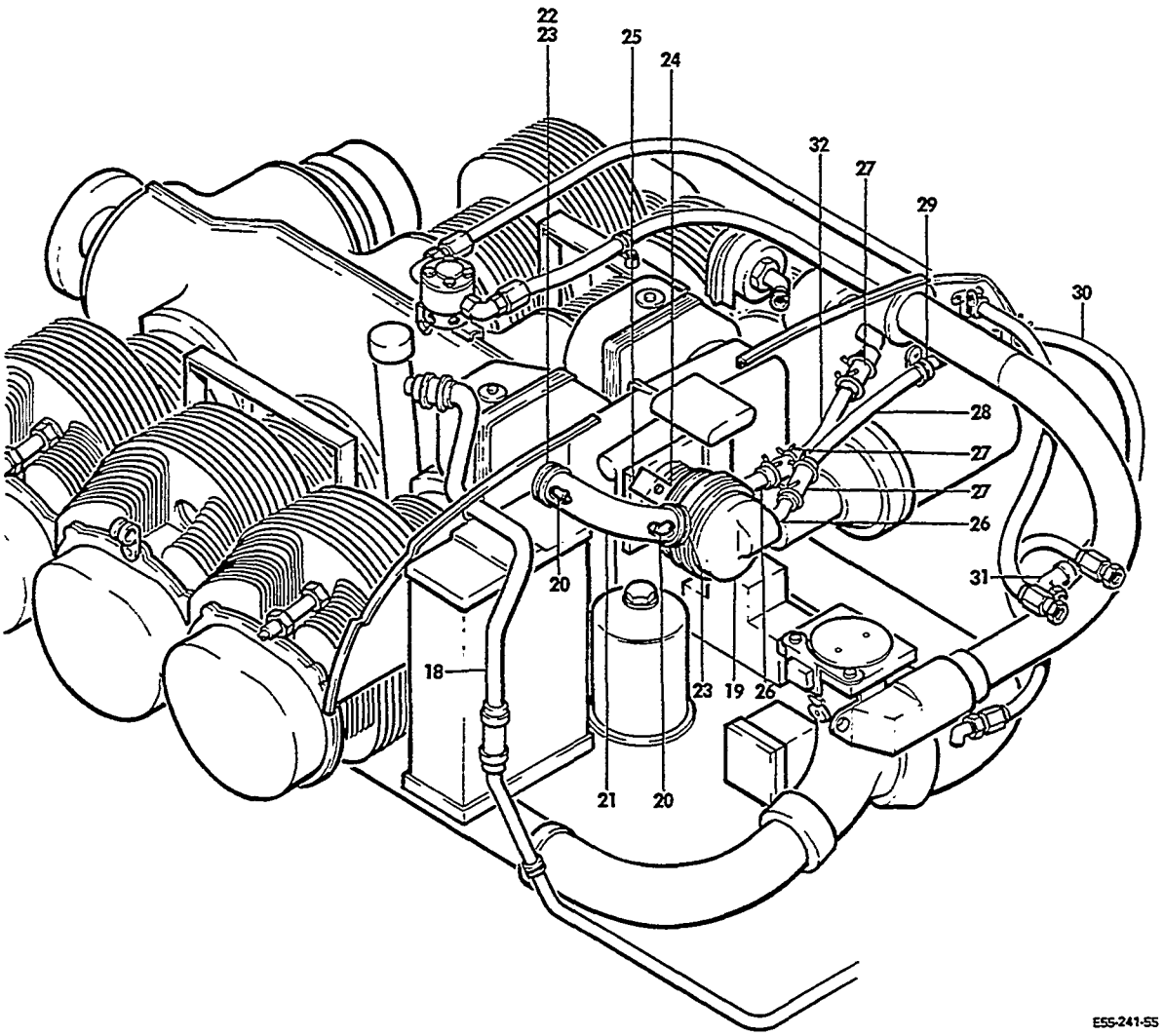

FIGURE 02-02.POWER PLANT
/SHEET 3 OF 6 SHEETS/

SUB-SECT UNIT & ITEM NO.	PART NO.	DESCRIPTION 1 2 3 4 5 6 7	UNITS PER ASSY	USABLE ON CODE
02-02 - 18	58-910018-1	. . TUBE INSTL,LH ENGINE BREATHER	NP	8
	58-910018-3	. . TUBE INSTL,RH ENGINE BREATHER	NP	8
		NOTE FOR ENGINE BREATHER AND ENGINE DRAIN PORTIONS OF THE POWER PLANT NOT LISTED IN THIS FIGURE SEE CHAPTER 71-72-01.		
- 19	232CW	. . PUMP,INSTRUMENT AIR/WITHOUT SURFACE DEICE/. SEE BEECHCRAFT SERVICE INSTRUCTION 0646-190/	1	1
	432CW12	. . PUMP,INSTRUMENT AIR/USE WITH SURFACE DEICE/ SEE BEECHCRAFT SERVICE INSTRUCTION 0646-190/	1	1
	242CW	. . PUMP,INSTRUMENT AIR/WITHOUT SURFACE DEICER/ SEE BEECHCRAFT SERVICE INSTRUCTION 0646-190/ WHEN USING AS SPARES REPLACEMENT FOR 232CW/	1	1
	442CW12	. . PUMP,INSTRUMENT AIR/WITH SURFACE DEICER/. . MAY REPLACE 432CW12,SEE BEECHCRAFT SERVICE INSTRUCTION 0646-190.	1	1
		NOTE 242CW & 442CW12 AIR PUMPS MUST BE USE IN CONJUNCTION WITH 58-910024-1 COOLING DUCT WHEN REPLACING 232CW OR 432CW12 AIR PUMP.		
	58-910024-1	. . DUCT INSTL,AIR PUMP COOLING/USE WHEN. . . . REPLACING 232CW OR 432CW12 PUMPS WITH 242CW OR 442CW12 AIR PUMPS/	NP	1
- 20	58-910024-3	. . . TUBE.	2	1
- 21	BE350-1	. . . DUCT. . . . . /ATTACHING PARTS/	1	1
- 22	MS21919DG21	. . . CLAMP	2	
- 23	AN743-12	. . . CLIP.	1	
- 24	58-910024-7	. . . CLIP.	1	
	AN3-4A	. . . BOLT.	4	
	AN960-10L	. . . WASHER.	4	
	MS20365-1032	. . . NUT	4	
		----*----		
- 25	58-910024-9	. . . BRACKET	1	1
- 26	1K10-6-12	. . FITTING,PRESSURE PUMP/W/O SURFACE DEICER/ .	2	1
	1K10-8-12	. . FITTING,PRESSURE PUMP/WITH SURFACE DEICER/.	1	1
	1K24-2	. . FITTING,PRESSURE PUMP/WITH SURFACE DEICER/.	1	1
- 27	96-910002-85	. . HOSE.	3	1
	CS-A16	. . CLAMP,HOSE.	8	1
		NOTE SEE CHAPTER 30 FOR HOSES & FITTINGS USED WITH SURFACE DEICER		
- 28	96-910002-87	. . TUBE.	1	1
- 29	AN742-14C	. . CLAMP,TUBE SUPPORT. . . . . /ATTACHING PARTS/	1	1
	AN515-6R7	. . SCREW	1	
	AN960-8	. . WASHER.	1	
	MS20365-832	. . NUT	1	
		----*----		
- 30	R 96-910002-89	. . HOSE.	1	1
- 31	1K43-12-12	. . FITTING,HOSE/FURNISHED WITH COMPLETE WING/.	1	1
	AN960PD1716	. . WASHER,HOSE FITTING	2	1
- 32	96-910002-83	. . TUBE,PRESSURE PUMP INTAKE	1	1

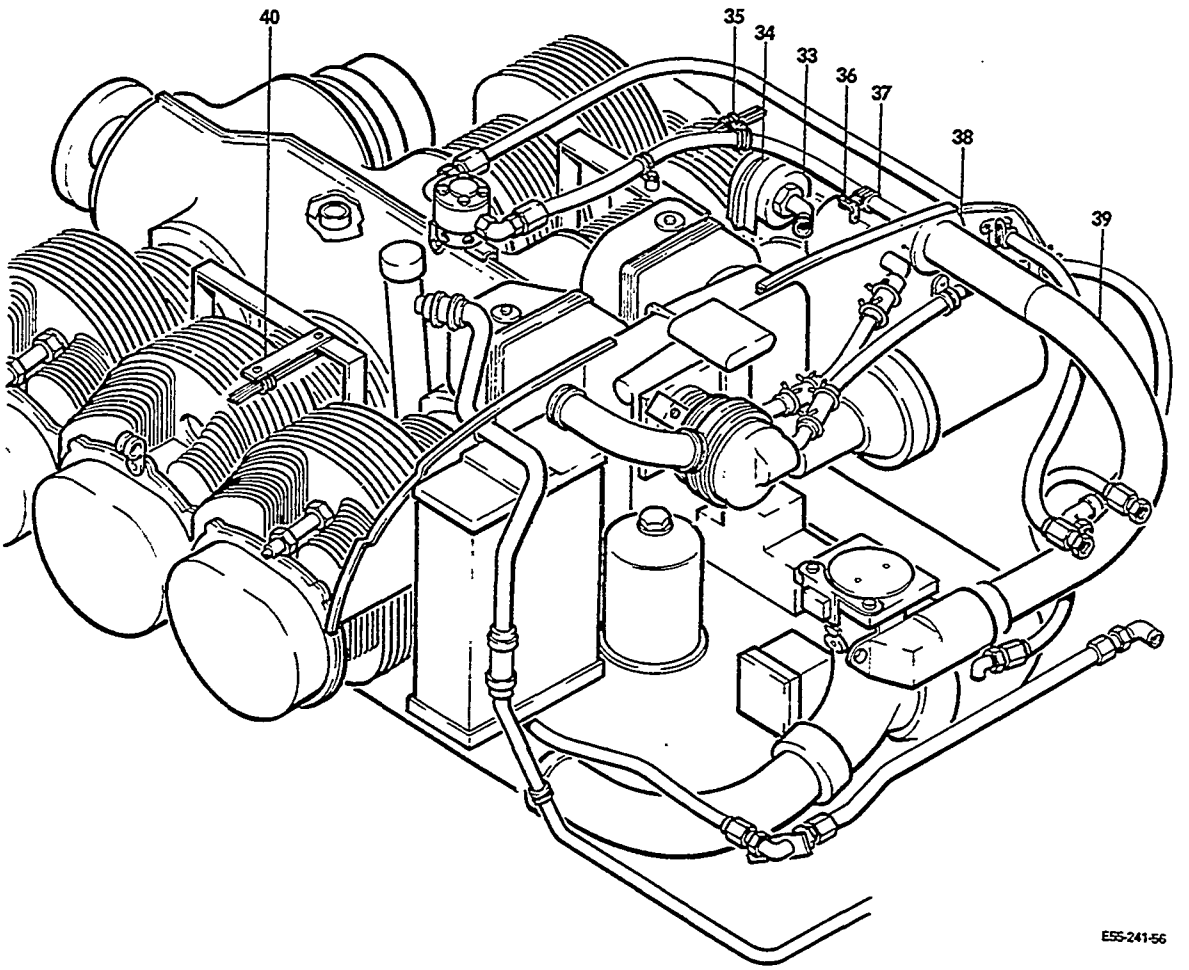

FIGURE 02-02.POWER PLANT
/SHEET 4 OF 6 SHEETS/

SUB-SECT UNIT & ITEM NO.	PART NO.	DESCRIPTION 1 2 3 4 5 6 7	UNITS PER ASSY	USABLE ON CODE
02-02 - 33	1J1-5	FILTER,INTAKE AIR	1	9
	1J2-5	FILTER,INTAKE AIR	1	10
	D9-14-1	CARTRIDGE,AIR FILTER/REPLACEABLE/	1	10
	AN960PD1716	WASHER.	2	1
- 34	96-910040-1	COVER	1	9
	58-910021-1	COVER,AIR FILTER.	1	10
		/ATTACHING PARTS/		
	AN3-	BOLT.	2	9
	AN315-3R	NUT,COVER RETAINING	1	10
	AN960-10	WASHER.	2	9
	AN936A10	WASHER,LOCK	1	10
	AN970-3	WASHER.	2	10
	100696A-ZC008	SPACER.	1	10
	MS20365-1032	NUT	2	9
	96-910041-1	BRACKET	1	9
		NOTE 1J1-5 FILTER MAY BE REPLACED BY 1J2-5 FILTER IF 96-910041-1 COVER & ATTACHING PARTS ARE REPLACED BY 58-910021-1 COVER, 96-910041-1 BRACKET IS REMOVED AND THE FOLLOWING ATTACHING PARTS FOR COVER ARE FURNISHED;1 EA 100696A-ZC008 SPACER, AN315-3R NUT,AN936A10 WASHER,& 2 EA AN970-3 WASHER.		
- 35	MS21919DG11	CLAMP,MAG WIRE HARNESS & FUEL LINE SUPPORT.	1	1
	MS21919DG8	CLAMP,MAG WIRE HARNESS & FUEL LINE SUPPORT.	1	1
		/ATTACHING PARTS/		
	AN520-10R	SCREW	1	
	MS20365-1032	NUT	1	
- 36	AN743-6	CLIP,FUEL LINE SUPPORT.	1	1
- 37	MS21919DG8	CLAMP,FUEL LINE SUPPORT	1	1
		/ATTACHING PARTS/		
	AN520-10R	SCREW	1	
	AN960-10L	WASHER.	1	
	MS20365-1032	NUT	1	
- 38	35-910004-7	WASHER,FLEX DUCT FLANGE BACK UP	1	1
		/ATTACHING PARTS/		
	AN515-8R	SCREW	5	
	AN960-8	WASHER.	5	
	MS20365-832	NUT	5	
- 39	115167CXZ060845	DUCT,FUEL METERING UNIT BLAST	1	1
		/ATTACHING PARTS/		
	R TY28M	TIE,BLAST DUCT/SEE BEECHCRAFT	1	
		SERVICE INSTRUCTION 0525-241/		
- 40	58-910019-1	ANGLE,MAG WIRE HARNESS SUPPORT/LH ONLY/	1	1
		/ATTACHING PARTS/		
	AN520-10R	SCREW	1	
	AN960-10L	WASHER.	1	
	MS20365-1032	NUT	1	

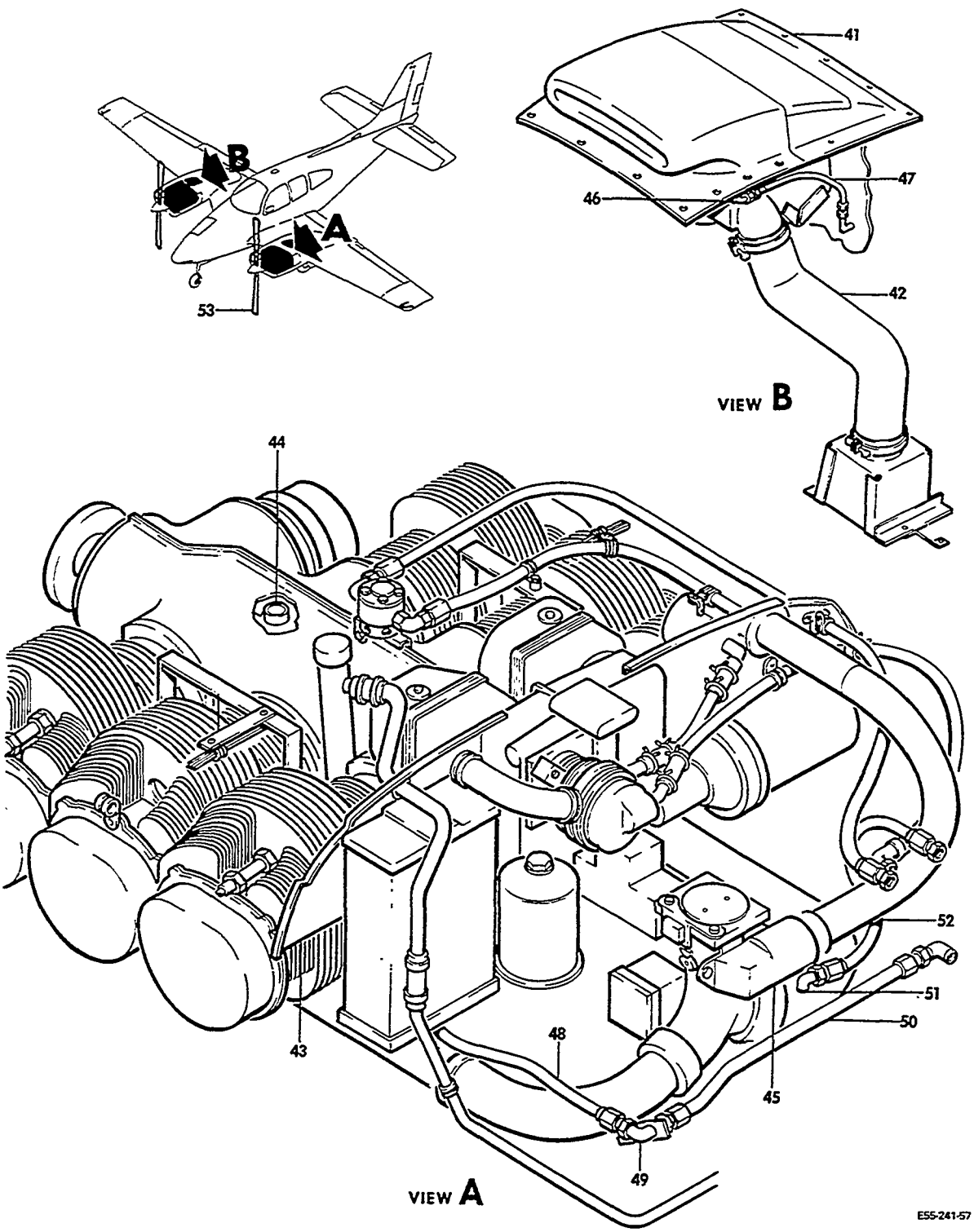

FIGURE 02-02.POWER PLANT
/SHEET 5 OF 6 SHEETS/

ATA CODE & INDEX NO.	PART NO.	DESCRIPTION 1 2 3 4 5 6 7	UNITS PER ASSY	USABLE ON CODE
02-02	MS21919DG11	CLAMP/MAG WIRES ON LH,FUEL LINE ON RH/	1	1
	MS21919DG8	CLAMP,FUEL LINE/RH ONLY/ /ATTACHING PARTS/	1	1
	AN520-10R	SCREW	1	
	AN960-10L	WASHER	1	
	MS20365-1032C	NUT	1	
		*		
- 41	96-919101	INDUCTION SYSTEM INSTL,LH/SEE 71-66-01/	NP	1
	96-919101-115	INDUCTION SYSTEM INSTL,RH/SEE 71-66-01/	NP	1
- 42	96-910024	ALTERNATE AIR INSTL/SEE 71-66-01/	NP	1
- 43	96-910020	BAFFLE INSTL,ENGINE/SEE 71-62-01/	NP	1
	96-950002-79	EXHAUST SYSTEM INSTL,LH/SEE 78-12-01/	NP	1
	96-950002-81	EXHAUST SYSTEM INSTL,RH/SEE 78-12-01/	NP	1
- 44	LOT6A10	DUCT,ALTERNATOR COOLING /ATTACHING PARTS/	1	1
	NAS397-24	CLAMP	1	
		*		
- 45	96-910030	THROTTLE WARNING INSTL/SEE CHAPTER 76/	NP	1
- 46	MS20822-4D	ELBOW/RH ENGINE ONLY/	1	1
- 47	AN6270-4-11	HOSE ASSY/RH ENGINE ONLY/	1	1
- 48	MS28741-4-0126	HOSE ASSY,LH ENGINE OIL PRESSURE	1	1
	MS28741-4-0180	HOSE ASSY,RH ENGINE OIL PRESSURE	1	1
- 49	AN833-4	ELBOW,LH OIL PRESSURE	1	1
	AN924-4D	NUT	1	1
	AN960-716L	WASHER	1	1
- 50	96-910002-9	TUBE ASSY,LH OIL PRESSURE	1	1
- 51	AN822-4D	FITTING,LH MANIFOLD PRESSURE	1	1
	AN816-4D	FITTING,RH MANIFOLD PRESSURE	1	1
- 52	AN6270-4-11	HOSE ASSY,LH MANIFOLD PRESSURE	1	1
	AN6270-4-28	HOSE ASSY,MANIFOLD PRESSURE RH	1	1
	AN931-4-7	GROMMET/MAGNETO WIRE THRU BAFFLE/	1	1
	96-910001-51	BRACKET/ATTACHED UNDER ENGINE SUMP BOLTS/	3	1
	96-910022	BLAST TUBE ASSY,FUEL PUMP/ATTACH TO ENGINE/ ACCESSORY DRIVE PAD WITH ENGINE FURNISH BOLTS/	1	1
- 53	BHCC2YF2CHFFC8 * 4756	PROPELLER ASSY/HARTZEL 2 BLADE/ /NO DEICE/	2	1
	96-960008-610	PROPELLER ASSY/HARTZELL 2 BLADE/ALCOHOL ANTI-ICER/	2	1
	96-960021-609	PROPELLER ASSY/HARTZELL 2 BLADE/ /ELECTRIC DEICE/	2	1
	PHCC3YF2FFC766 * 32R	PROPELLER ASSY/HARTZELL 3 BLADE/ /NO DEICE/	2	1
	96-960008-611	PROPELLER ASSY/HARTZELL 3 BLADE/ /ALCOHOL ANTI-ICER/	2	1
	96-960010-606	PROPELLER ASSY/MCCAULEY 3 BLADE/ /ELECTRIC DEICE/	2	11
	96-960020-602	PROPELLER ASSY/HARTZELL 3 BLADE/ /ELECTRIC DEICE/	2	12

NOTE SEE CHAPTER 61 FOR PROPELLER BREAKDOWN AND CHAPTER 30 FOR PROP ANTI-ICE AND ELECTRIC DEICE.

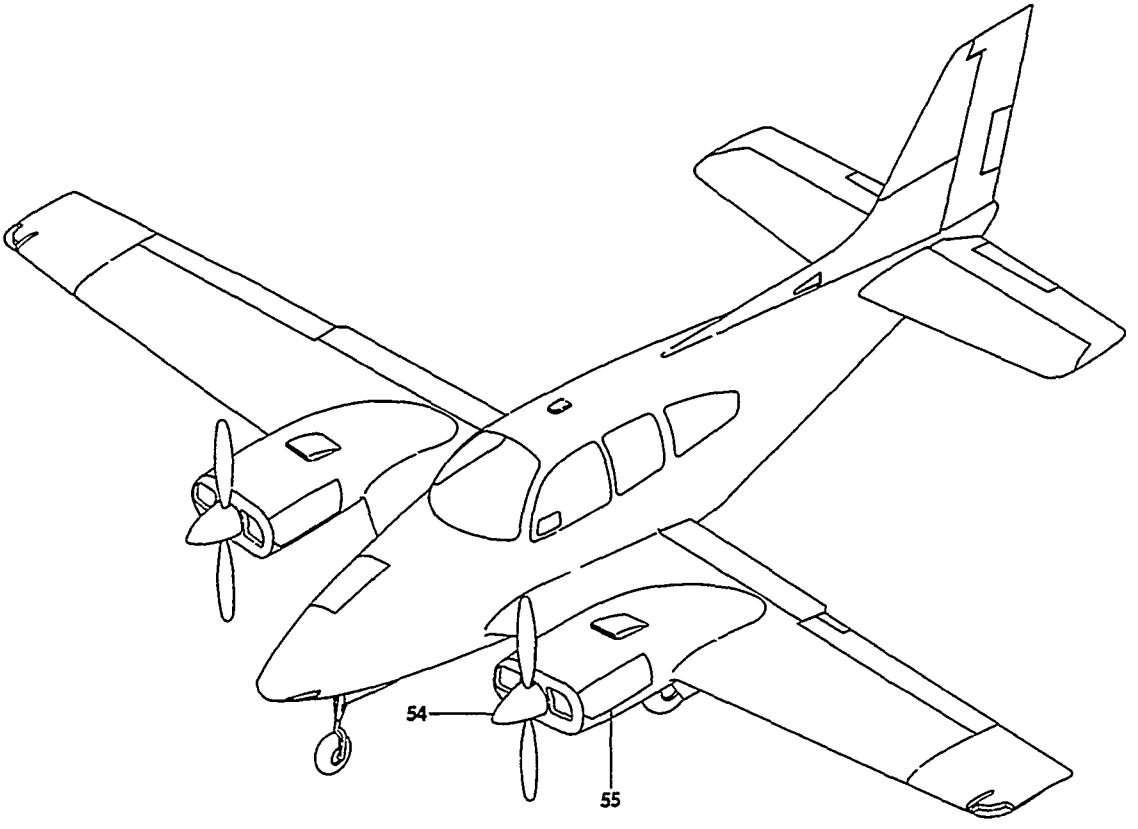

E55-241-58

FIGURE 02-02.POWER PLANT
/SHEET 6 OF 6 SHEETS/

ATA CODE & INDEX NO.	PART NO.	DESCRIPTION 1 2 3 4 5 6 7	UNITS PER ASSY	USABLE ON CODE
02-02 - 54	C2285-1P	. SPINNER ASSY/HARTZELL 2 BLADE PROP/ . . . . . /USED WITH OR WITHOUT ALCOHOL ANTI-ICE/	2	1
	96-960021-9	. SPINNER ASSY/HARTZELL 2 BLADE PROP/ . . . . . /ELECTRIC DEICE/	2	1
	C3567-1P	. SPINNER ASSY/HARTZELL 3 BLADE PROP/ . . . . . /USED WITH OR WITHOUT ALCOHOL ANTI-ICE/	2	1
	96-960010-654	. SPINNER ASSY/MCCAULEY 3 BLADE/ELECTRIC DEICE/	1	11
	96-960020-9	. SPINNER ASSY/HARTZELL 3 BLADE/ELECTRIC DEICE/	2	12
	D3571	. . BULKHEAD,SPINNER/MCCAULEY 3 BLADE/.	1	11
	C2283	. . BULKHEAD,SPINNER/HARTZELL 2 BLADE/WITH OR . WITHOUT DEICE OR ANTI-ICE/	1	1
	C3566-1	. . BULKHEAD,SPINNER/HARTZELL 3 BLADE/WITH OR . WITHOUT DEICE OR ANTI-ICE/	1	1
- 55	96-910012-105	COWLING INSTL,ENGINE/SEE 71-12-01/.	NP	1

CODES OF EFFECTIVITY

1	TE-850 THRU TE-942 EXCEPT TE-938	2	TE-850 THRU TE-870
3	TE-871 THRU TE-942 EXCEPT TE-938	4	TE-850 THRU TE-860
5	TE-861 THRU TE-942 EXCEPT TE-938	6	TE-850 AND TE-851
7	TE-850 THRU TE-855	8	TE-855 THRU TE-942 EXCEPT TE-938
9	TE-850 THRU TE-936	10	TE-937 AND TE-939 THRU TE-942
11	TE-850 THRU TE-860	12	TE-861 THRU TE-942 EXCEPT TE-938

"END"

71-10-01
ENGINE COWLING
TC-1 THRU TC-1607

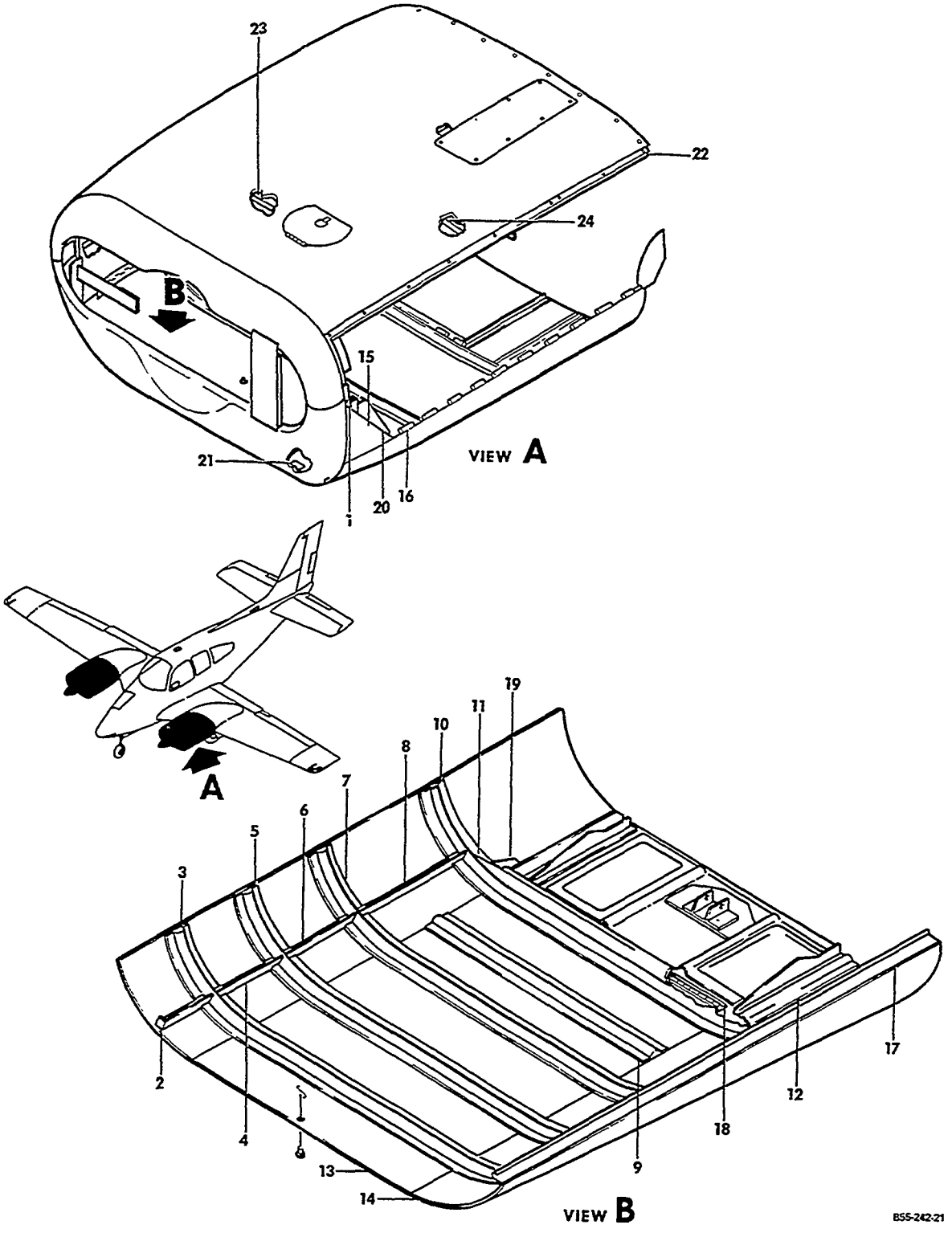

FIGURE 10-01.ENGINE COWLING
/SHEET 1 OF 4 SHEETS/

SUB-SECT UNIT & ITEM NO.	PART NO.	DESCRIPTION 1 2 3 4 5 6 7	UNITS PER ASSY	USABLE ON CODE
10-01	96-910011-1	COWLING INSTL,ENGINE.	NP	1
	96-910011-615	. COWLING ASSY,ENGINE	1	1
	96-910011-626	. . BOTTOM ASSY,COWL/SUPERSEDES 96-910011-17/ .	1	1
- 1	96-910011-7	. . . FORMER/LH/.	1	1
	96-910011-215	. . . FORMER/RH/SUPERSEDES 96-910011-8/	1	1
	58-910011-103	. . . STIFFENER/LH FWD/	1	3
- 2	58-910011-104	. . . STIFFENER/RH FWD/	1	3
	96-910011-213	. . . FORMER/FWD/	1	2
- 3	58-910011-93	. . . FORMER/FWD/	1	3
R	96-910011-149	. . . STIFFENER/LH/STA 28 TO 43/.	1	5
	58-910011-99	. . . STIFFENER/LH/CENTER FWD/.	1	3
	96-910011-150	. . . STIFFENER/RH/STA 28 TO 43/.	1	5
- 4	58-910011-100	. . . STIFFENER/RH/CENTER FWD/.	1	3
	96-910011-207	. . . FORMER.	1	2
- 5	58-910011-95	. . . FORMER.	1	3
	58-910011-101	. . . STIFFENER/LH/CENTER AFT/.	1	3
- 6	58-910011-102	. . . STIFFENER/RH/	1	3
- 7	96-910011-5	. . . STIFFENER	1	1
- 8	96-910011-151	. . . STIFFENER/AFT/.	2	4
- 9	58-910011-97	. . . FORMER.	1	3
- 10	96-910011-3	. . . FORMER.	1	1
- 11	58-910011-105	. . . CHANNEL	1	3
	96-910011-13	. . . ANGLE/LH/	1	2
- 12	58-910011-107	. . . FORMER/LH/.	1	3
	96-910011-14	. . . ANGLE/RH/	1	2
	58-910011-108	. . . FORMER/RH/.	1	3
	96-910011-15	. . . SKIN,BOTTOM	1	2
- 13	58-910011-71	. . . SKIN,BOTTOM	1	3
- 14	58-910011-121	. . . SKIN/LH/SUPERSEDES 96-910011-81 AND . . . 58-910011-69/	1	1
	58-910011-122	. . . SKIN/RH/SUPERSEDES 96-910011-82 AND . . . 58-910011-70/	1	1
- 15	96-910011-127	. . . SKIN/LH FWD/.	1	1
	96-910011-128	. . . SKIN/RH FWD/.	1	1
- 16	96-910011-9	. . . HINGE,COWL DOOR/LH/	1	1
	96-910011-10	. . . HINGE,COWL DOOR/RH/	1	1
- 17	96-910011-11	. . . STRINGER/LH/.	1	1
	96-910011-12	. . . STRINGER/RH/.	1	1
- 18	96-910016-39	. . . HINGE,COWL FLAP	1	1
	S5-325	. . . SPRING.	12	1
- 19	96-910011-205	. . . DOUBLER	2	6
	96-910011-135	. . . ANGLE/LH/	1	7
- 20	96-910011-189	. . . ANGLE/LH/	1	8
	96-910011-136	. . . ANGLE/RH/	1	7
	96-910011-190	. . . ANGLE/RH/	1	8
- 21	96-910011-211	. . . CLIP/LH/.	1	1
	96-910011-212	. . . CLIP/RH/.	1	1
	96-910011-613	. . TOP ASSY,ENGINE COWL.	1	7
	96-910011-623	. . TOP ASSY,ENGINE COWL.	1	8
- 22	96-910011-55	. . . CHANNEL/LH/	1	1
	96-910011-56	. . . CHANNEL/RH/	1	1
- 23	96-910011-57	. . . ANGLE	1	1
- 24	96-910011-59	. . . ANGLE	1	1

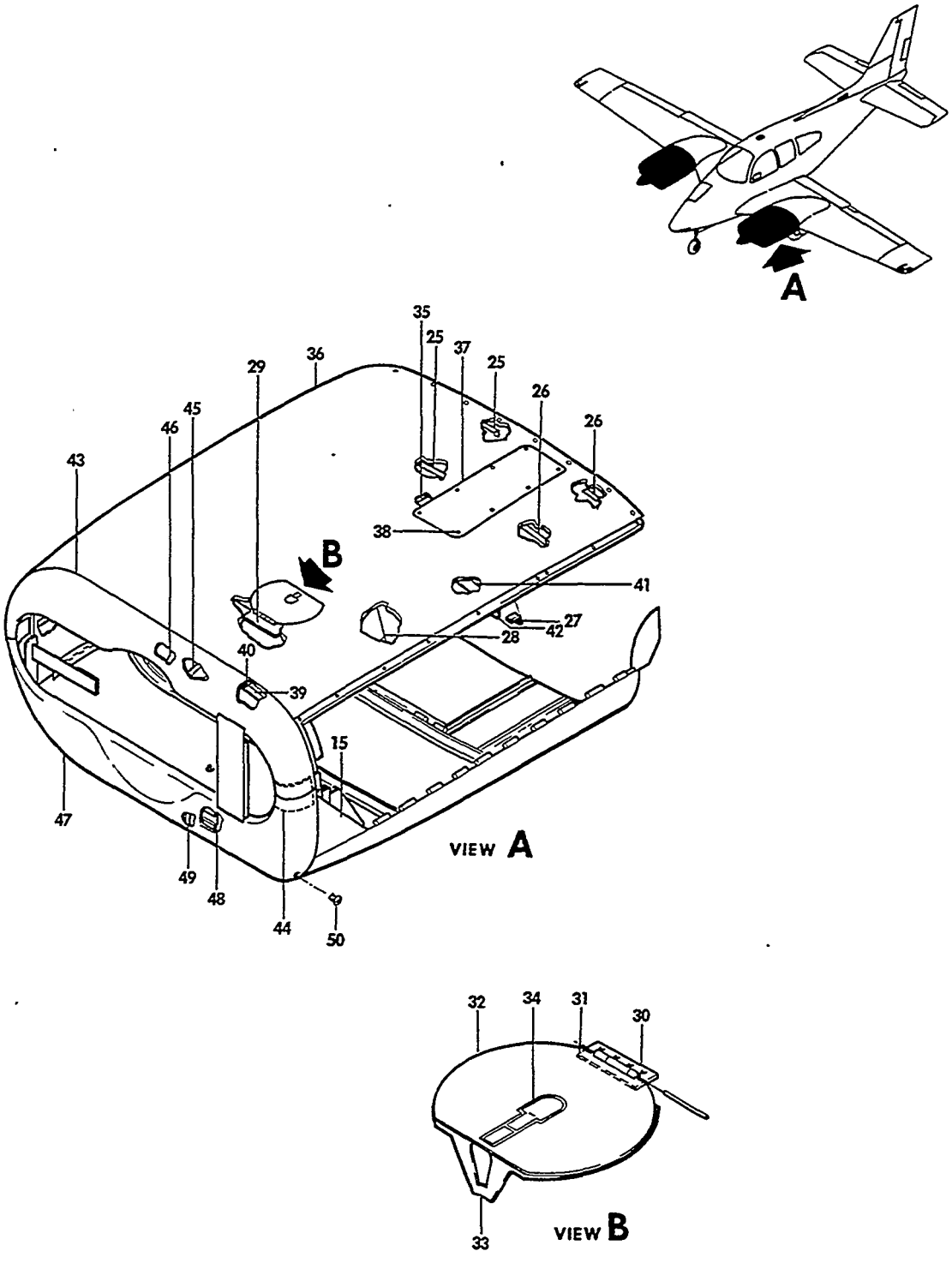

BS5-242-22

FIGURE 10-01.ENGINE COWLING
/SHEET 2 OF 4 SHEETS/

ATA CODE & INDEX NO.	PART NO.	DESCRIPTION 1 2 3 4 5 6 7	UNITS PER ASSY	USABLE ON CODE
10-01	96-910011-63	. . . ANGLE	2	7
- 25	96-910011-163	. . . ANGLE	2	8
- 26	96-910011-161	. . . ANGLE	2	8
- 27	96-910011-75	. . . CLIP	2	1
- 28	96-910011-79	. . . DOUBLER	1	1
- 29	96-910011-203	. . . REINFORCEMENT,OIL FILLER DOOR	1	6
	50-939118-12	. . . DOOR ASSY,OIL FILLER ACCESS	1	1
		/ATTACHING PARTS/		
	105774C-2E00208	. . . PIN,HINGE	1	1
		——*——		
- 30	50-939118-2	. . . . HINGE HALF,OIL FILLER ACCESS DOOR	1	1
- 31	50-939118-4	. . . . HINGE HALF,OIL FILLER ACCESS DOOR	1	1
	50-939118-14	. . . . STRIP,HINGE SPACER	1	6
- 32	50-939118-6	. . . . PLATE,OIL FILLER ACCESS DOOR	1	1
- 33	50-939118-10	. . . . REINFORCEMENT	1	1
- 34	H5000-032-040	. . . . LATCH ASSY,OIL FILLER DOOR	1	1
- 35	96-910011-165	. . . REINFORCEMENT	1	1
- 36	96-910011-167	. . . SKIN	1	1
- 37	96-910011-169	. . . DOOR	1	1
- 38	F4-30	. . . FASTENER	8	1
	S4-25	. . . SPRING	8	1
	4	. . . RING,SNAP	8	1
	214-16	. . . RECEPTACLE	14	1
- 39	96-910011-191	. . . FORMER	1	1
	96-910011-107	. . . STRIP,CAP/LH/	1	7
- 40	96-910011-193	. . . STRIP,CAP/LH/	1	8
	96-910011-108	. . . STRIP,CAP/RH/	1	7
	96-910011-194	. . . STRIP,CAP/RH/	1	8
- 41	96-910011-61	. . . ANGLE	1	1
- 42	96-910011-71	. . . SEAL	1	1
	214-16	. . . RECEPTACLE	14	1
	40R8-16-1	. . . SHIM,RECEPTACLE	10	1
	C0853801-1	. . . PLATE/LH/	1	9
	C0853801-2	. . . PLATE/RH/	1	9
	C0853802-1	. . . PLATE/LH/	1	9
	C0853802-2	. . . PLATE/RH/	1	9
	96-910011-612	. . NOSE BUG ASSY,ENGINE COWL	1	1
- 43	96-910011-219	. . . NOSE BUG,UPPER/UNTRIMMED/	1	1
		/SUPERSEDES 96-910011-153/		
- 44	96-910011-217	. . . SPLICE/LH/SUPERSEDES 96-910011-155/	2	1
	96-910011-218	. . . SPLICE/RH/SUPERSEDES 96-910011-156/	2	1
- 45	96-910011-115	. . . BRACKET/LH/	1	1
	96-910011-116	. . . BRACKET/RH/	1	1
- 46	96-910011-129	. . . DOUBLER	1	1
- 47	96-910011-157	. . . NOSE BUG,LOWER	1	1
- 48	96-910011-121	. . . FORMER	1	1
- 49	96-910011-123	. . . ANGLE/LH/	1	1
	96-910011-124	. . . ANGLE/RH/	1	1
- 50	F5-35	. . . FASTENER	12	1
	GF5-175	. . . GROMMET	12	1
	96-910011-610	. . DOOR ASSY,ENGINE COWL/LH/	1	7
	96-910011-624	. . DOOR ASSY,ENGINE COWL/LH/	1	8
	96-910011-98	. . DOOR ASSY,ENGINE COWL/RH/	1	7
	96-910011-625	. . DOOR ASSY,ENGINE COWL/RH/	1	8

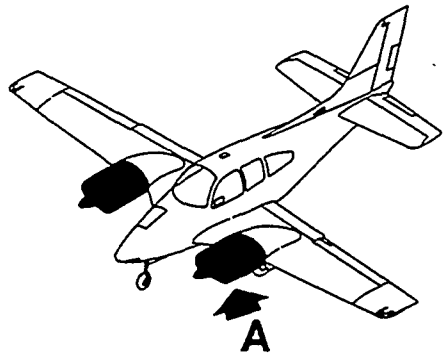

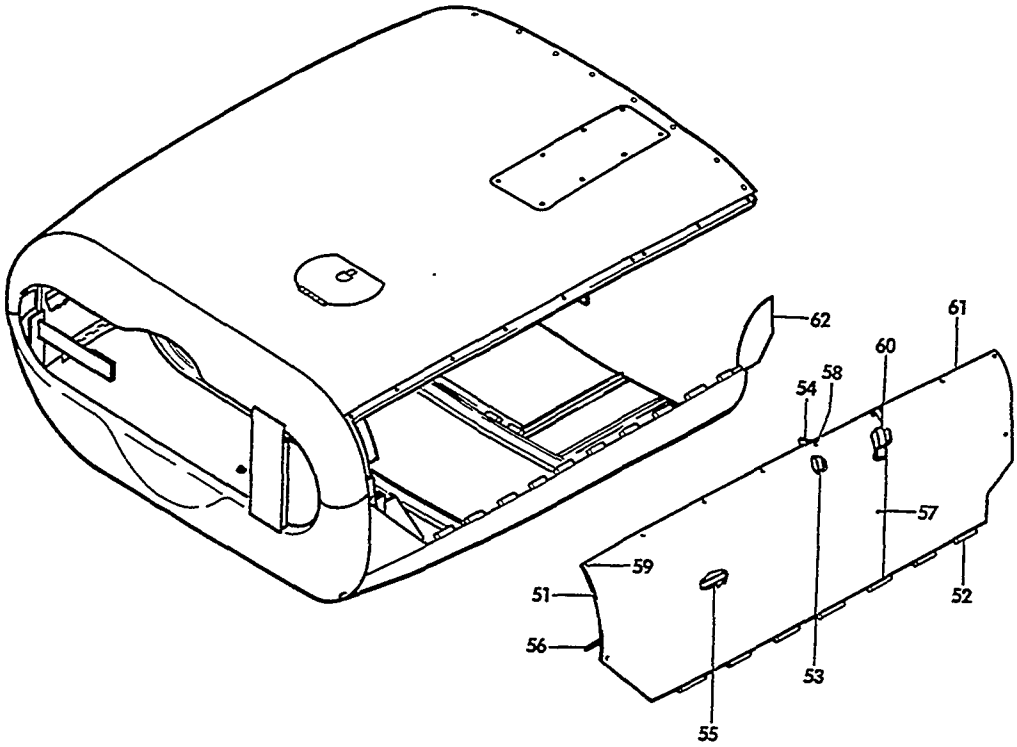

VIEW **A**

BS5-242-23

FIGURE 10-01.ENGINE COWLING
/SHEET 3 OF 4 SHEETS/

ATA CODE & INDEX NO.	PART NO.	DESCRIPTION 1 2 3 4 5 6 7	UNITS PER ASSY	USABLE ON CODE
10-01	96-910011-199	. . . DOOR ASSY,ENGINE COWL/LH FWD/	1	7
		/SUPERSEDES 96-910011-51/		
	96-910011-187	. . . DOOR ASSY,ENGINE COWL/LH FWD/	1	8
	96-910011-200	. . . DOOR ASSY,ENGINE COWL/RH FWD/	1	7
		/SUPERSEDES 96-910011-52/		
	96-910011-188	. . . DOOR ASSY,ENGINE COWL/RH FWD/	1	8
	96-910011-49	. . . . SKIN/LH/.	1	7
- 51	96-910011-185	. . . . SKIN/LH/.	1	8
	96-910011-50	. . . . SKIN/RH/.	1	7
	96-910011-186	. . . . SKIN/RH/.	1	8
- 52	96-910011-47	. . . . HINGE,HALF/LH/.	1	1
	96-910011-48	. . . . HINGE,HALF/RH/.	1	1
- 53	96-910011-33	. . . . ANGLE/LH/	1	1
	96-910011-34	. . . . ANGLE/RH/	1	1
- 54	96-910011-73	. . . . SEAL.	2	1
- 55	96-910011-45	. . . . ANGLE/LH/	1	1
	96-910011-46	. . . . ANGLE/RH/	1	1
- 56	96-910011-69	. . . . SEAL/LH/.	1	1
	96-910011-113	. . . . SEAL/RH/.	1	1
	96-910011-29	. . . . ANGLE/LH/	1	7
	96-910011-30	. . . . ANGLE/RH/	1	7
	96-910011-31	. . . . ANGLE/LH/	1	7
	96-910011-32	. . . . ANGLE/RH/	1	7
	96-910011-37	. . . . ANGLE/LH/	1	7
	96-910011-38	. . . . ANGLE/RH/	1	7
	96-910011-39	. . . . ANGLE/LH/	1	7
	96-910011-40	. . . . ANGLE/RH/	1	7
	96-910011-41	. . . . ANGLE/LH/	1	7
	96-910011-42	. . . . ANGLE/RH/	1	7
	96-910011-87	. . . . DOUBLER	1	7
- 57	40S5-2	. . . . STUD.	4	1
- 58	40S5-3	. . . . STUD.	6	1
- 59	40S5-4	. . . . STUD.	1	1
	R4G	. . . . RING,SNAP	10	1
	4002G	. . . . GROMMET	10	1
	40R8-16-1	. . . . SHIM,RECEPTACLE	2	1
	214-16	. . . . RECEPTACLE.	2	1
	96-910011-97	. . . DOOR ASSY,AFT COWL/LH/.	1	7
	96-910011-183	. . . DOOR ASSY,AFT COWL/LH/.	1	8
	96-910011-98	. . . DOOR ASSY,AFT COWL/RH/.	1	7
	96-910011-184	. . . DOOR ASSY,AFT COWL/RH/.	1	8
		/ATTACHING PARTS/		
	AN509-10R8	. . . SCREW	4	
	NAS1024A3K	. . . NUTPLATE.	4	
	MS24694S50	. . . SCREW	5	
		——*——		
	96-910011-35	. . . . ANGLE/LH/	1	7
	96-910011-36	. . . . ANGLE/RH/	1	7
	96-910011-89	. . . . ANGLE/LH/	1	7
- 60	96-910011-181	. . . . ANGLE/LH/	1	8
	96-910011-90	. . . . ANGLE/RH/	1	7
	96-910011-182	. . . . ANGLE/RH/	1	8
	96-910011-91	. . . . ANGLE/LH/	1	7
	96-910011-92	. . . . ANGLE/RH/	1	7
	96-910011-93	. . . . SKIN/LH/.	1	7
- 61	96-910011-179	. . . . SKIN/LH/.	1	8
	96-910011-94	. . . . SKIN/RH/.	1	7
	96-910011-180	. . . . SKIN/RH/.	1	8
- 62	96-910011-201	. . . . SKIN/LH/SUPERSEDES 96-910011-119/ . . .	1	7
	96-910011-120	. . . . SKIN/RH/.	1	7

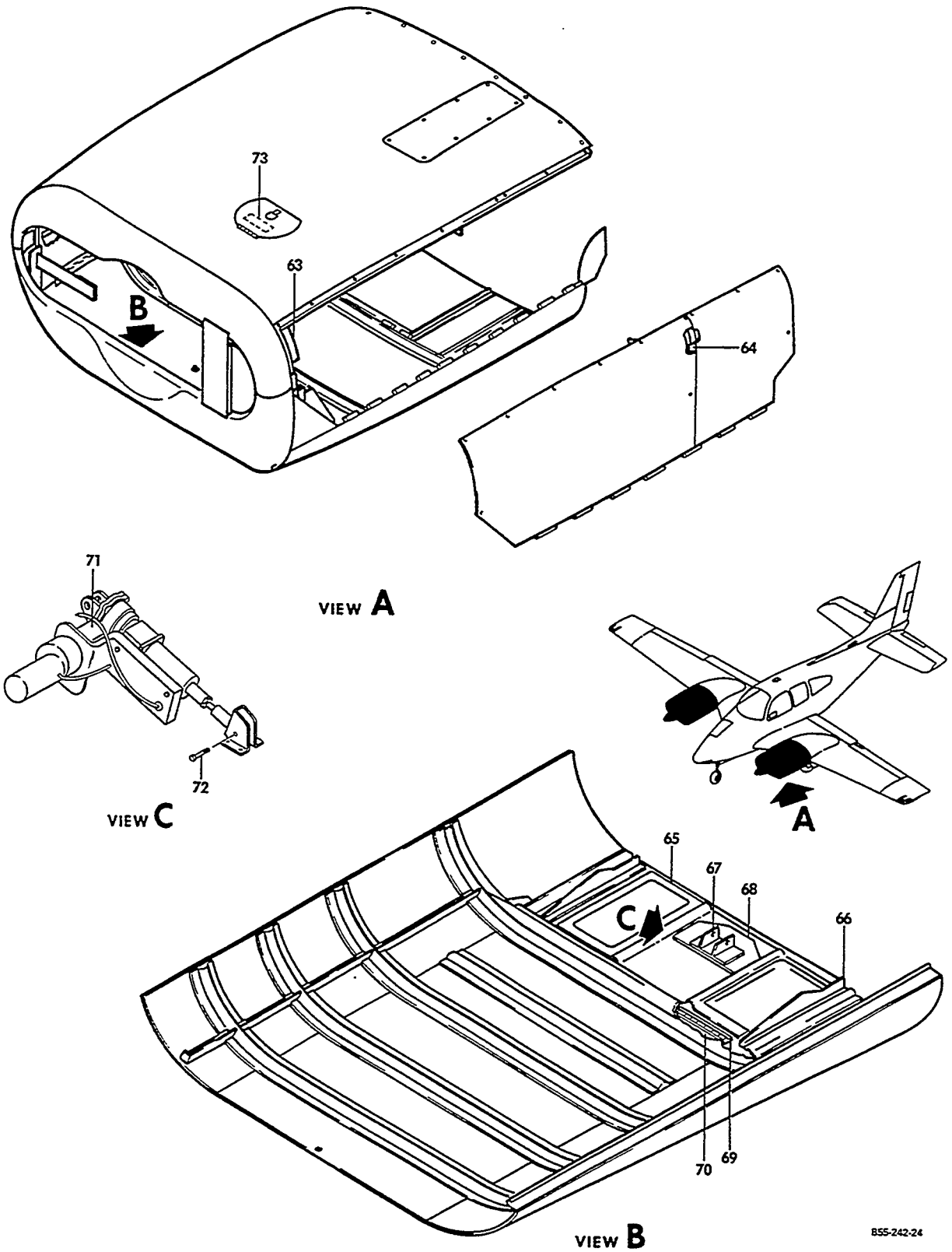

FIGURE 10-01. ENGINE COWLING
/SHEET 4 OF 4 SHEETS/

ATA CODE & INDEX NO.	PART NO.	DESCRIPTION 1 2 3 4 5 6 7	UNITS PER ASSY	USABLE ON CODE
10-01 - 63	96-910011-133	. . . FORMER/LH/.	1	7
	96-910011-134	. . . FORMER/RH/.	1	7
- 64	96-910011-137	. . . ANGLE/LH/	1	7
	96-910011-138	. . . ANGLE/RH/	1	7
	C0853822-1	. . . SHIM.	2	9
	96-910016-57	. . DOOR ASSY,COWL FLAP/SUPERSEDES 96-910016-15 AND 96-910016-47/ /ATTACHING PARTS/	1	1
	MS20253-2-1788	. . PIN,HINGE	1	
		----*----		
- 65	96-910016-7	. . . WELD ASSY,COWL FLAP DOOR.	1	1
- 66	96-910016-55	. . . ANGLE/LH/	1	1
	96-910016-56	. . . ANGLE/RH/	1	1
- 67	96-910016-19	. . . BRACKET	1	1
- 68	96-910016-43	. . . DOUBLER	1	1
- 69	96-910016-41	. . . HINGE,COWL FLAP	1	1
- 70	96-910016-39	. HINGE,COWL FLAP	1	1
- 71	96-380021-3	. ACTUATOR ASSY,COWL FLAP . . . . . /ATTACHING PARTS/	1	1
- 72	AN3-12	. BOLT.	1	
	100696S-ZG004	. SPACER.	2	
	AN960-10	. WASHER.	2	
	AN310-3	. NUT	1	
	AN380-2-2	. PIN,COTTER.	1	
		----*----		
- 73	35-939181	. PLACARD,OIL FILLER CAP.	1	1

CODES OF EFFECTIVITY

1	TC-1 THRU TC-1607	2	TC-1 THRU TC-1454
3	TC-1455 THRU TC-1607	4	TC-43 THRU TC-1607
5	TC-43 THRU TC-1454	6	TC-395 THRU TC-1607
7	TC-1 THRU TC-250	8	TC-251 THRU TC-1607
9	TC-1 THRU TC-75		

"END"

71-12-01
ENGINE COWLING
TE-1 THRU TE-942,EXCEPT TE-938

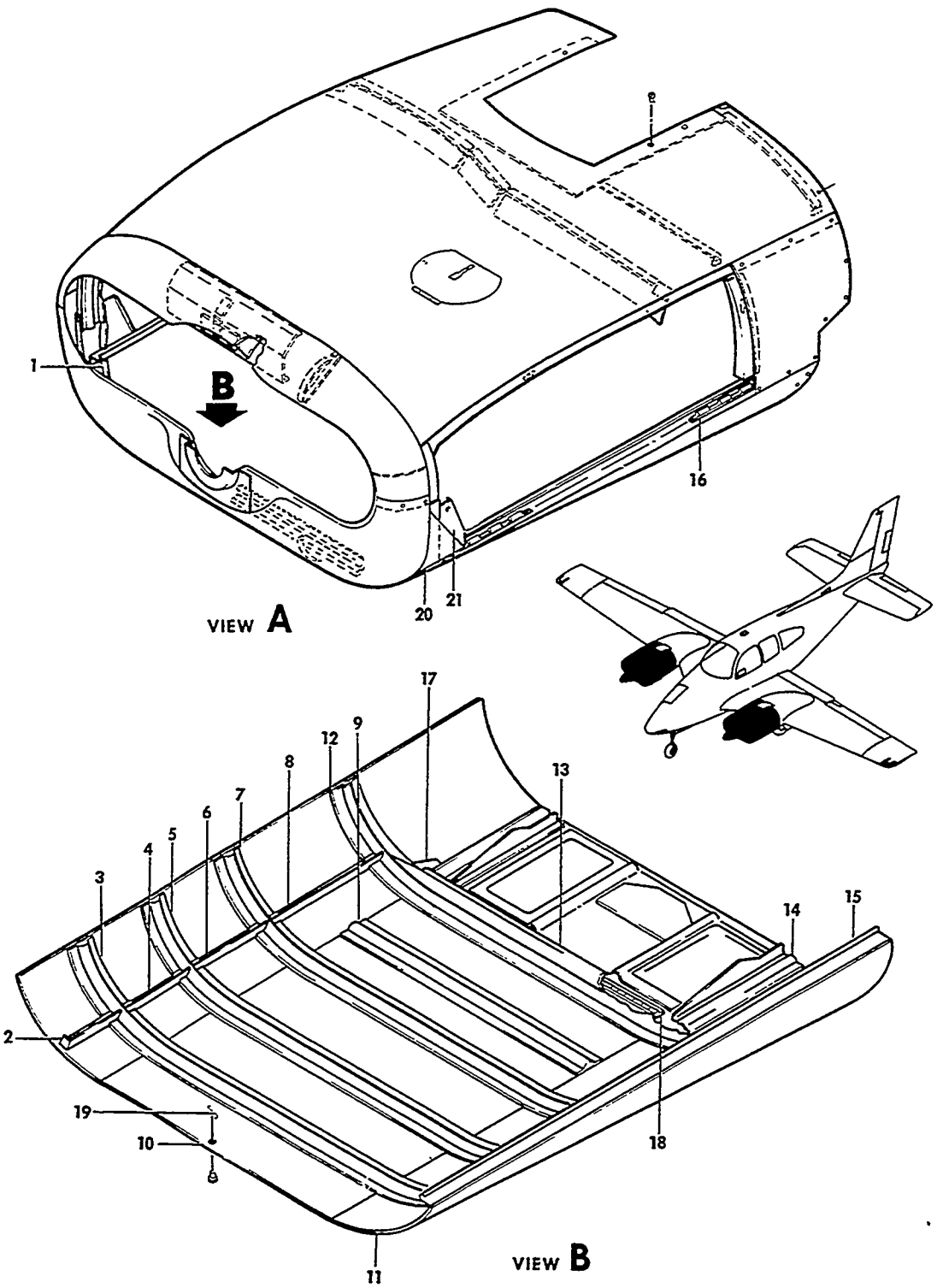

FIGURE 12-01.ENGINE COWLING
/SHEET 1 OF 4 SHEETS/

ATA CODE & INDEX NO.	PART NO.	DESCRIPTION 1 2 3 4 5 6 7	UNITS PER ASSY	USABLE ON CODE
12-01	96-910012	COWLING INSTL,ENGINE/WITH ELECTRIC PROP DEICE/.	NP	1
	96-910012-105	COWLING INSTL,ENGINE/WITHOUT ELECTRIC DEICE/. .	NP	2
	96-910012-617	. COWLING ASSY,ENGINE/LESS ELECTRIC DEICE/. . .	2	2
	96-910012-615	. COWLING ASSY,ENGINE/WITH ELECTRIC DEICE/. . .	2	1
	96-910011-628	. . BOTTOM ASSY,ENGINE COWL	1	1
- 1	96-910011-7	. . . FORMER,LH FWD	1	1
	96-910011-215	. . . FORMER,RH FWD	1	1
	96-910011-149	. . . STIFFENER,LH FWD.	1	3
	58-910011-103	. . . STIFFENER,LH FWD.	1	4
	96-910011-150	. . . STIFFENER,RH FWD.	1	3
- 2	58-910011-104	. . . STIFFENER,RH FWD.	1	4
- 3	58-910011-93	. . . FORMER,FWD.	1	4
	58-910011-99	. . . STIFFENER,LH.	1	4
- 4	58-910011-100	. . . STIFFENER,LH.	1	4
	96-910011-213	. . . STIFFENER	1	3
- 5	58-910011-95	. . . FORMER.	1	4
	96-910011-207	. . . STIFFENER	1	3
	58-910011-101	. . . STIFFENER,LH.	1	4
- 6	58-910011-102	. . . STIFFENER,RH.	1	4
- 7	96-910011-5	. . . FORMER.	1	1
- 8	96-910011-151	. . . STIFFENER	2	1
- 9	58-910011-97	. . . FORMER.	1	4
- 10	58-910011-71	. . . SKIN,CENTER BOTTOM.	1	4
	96-910011-15	. . . SKIN,CENTER BOTTOM.	1	3
- 11	96-910011-81	. . . SKIN,LH BOTTOM.	1	3
	58-910011-69	. . . SKIN,LH BOTTOM.	1	5
	58-910011-121	. . . SKIN,LH BOTTOM.	1	6
	96-910011-82	. . . SKIN,RH BOTTOM.	1	7
	58-910011-70	. . . SKIN,RH BOTTOM.	1	8
	58-910011-122	. . . SKIN,RH BOTTOM.	1	4
- 12	96-910011-3	. . . FORMER.	1	1
- 13	58-910011-105	. . . CHANNEL	1	4
- 14	96-910011-13	. . . ANGLE,LH.	1	3
	58-910011-107	. . . FORMER,LH	1	4
	96-910011-14	. . . ANGLE,RH.	1	3
	58-910011-108	. . . FORMER,RH	1	4
- 15	96-910011-11	. . . STRINGER,LH	1	1
	96-910011-12	. . . STRINGER,RH	1	1
- 16	96-910011-9	. . . HINGE,LH COWL DOOR.	1	1
	96-910011-10	. . . HINGE,RH COWL DOOR.	1	1
- 17	96-910011-205	. . . REINFORCEMENT	2	1
- 18	96-910016-39	. . . HINGE,COWL FLAP	1	1
- 19	S5-325	. . . SPRING,FASTENER	12	1
- 20	96-910011-127	. . . SKIN,LH	1	1
	96-910011-128	. . . SKIN,RH	1	1
- 21	96-910011-189	. . . BRACKET,LH.	1	1
	96-910011-190	. . . BRACKET,RH.	1	1
	96-910001-107	. . . HOSE/ENGINE DRAIN/.	1	1
	96-910001-95	. . . TUBE,ENGINE DRAIN	1	1
	MS35489-6	. . . GROMMET/ENGINE DRAIN THRU COWL BOTTOM/. .	1	1
	MS21919DG8	. . . CLAMP/ENGINE DRAIN TUBE SUPPORT/.	1	1
		/ATTACHING PARTS/		
	AN3-4	. . . BOLT.	1	
	AN960-10	. . . WASHER.	1	
	MS20365-1032	. . . NUT	1	
		----*----		
	96-910001-103	. . . CLIP/ENGINE DRAIN TUBE CLAMP SUPPORT/ . .	1	1
		/ATTACHING PARTS/		
	MS35207-259	. . . SCREW/SUPERSEDES AN520-10-4/.	1	
		----*----		

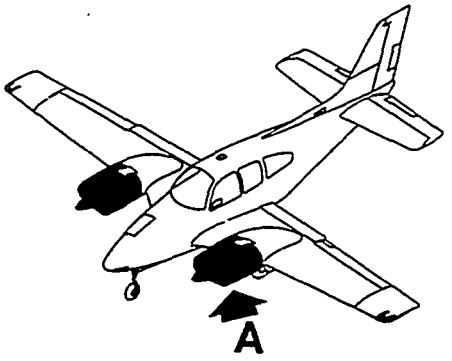

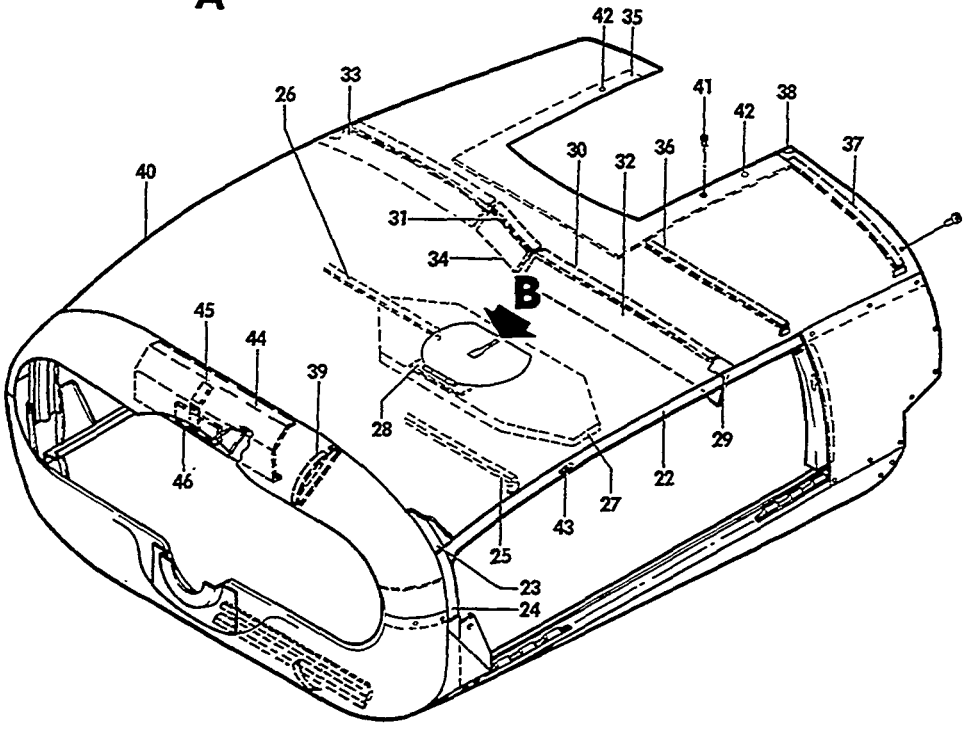

VIEW A

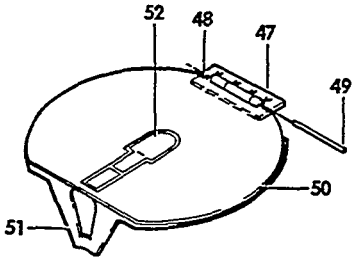

VIEW B

E55-242-18

FIGURE 12-01.ENGINE COWLING
/SHEET 2 OF 4 SHEETS/

SUB-SECT UNIT & ITEM NO.	PART NO.	1 2 3 4 5 6 7 DESCRIPTION	UNITS PER ASSY	USABLE ON CODE
12-01	96-910012-619	. . COWL ASSY,UPPER ENGINE/W/O DEICE/	1	2
	96-910012-613	. . COWL ASSY,UPPER ENGINE/WITH OR W/O DEICE/ . /ATTACHING PARTS/	1	1
	AN509-10R8	. . SCREW	14	
	NAS1031A3K	. . NUTPLATE/AT NACELLE/.	10	
	NAS1024A3K	. . NUTPLATE/AT NOSE BUG/	2	
	AN525-10R8	. . SCREW	2	
	NAS697A3	. . NUTPLATE/AT NOSE BUG/	2	
		——*——		
- 22	96-910011-55	. . . CHANNEL,LH.	1	1
	96-910011-56	. . . CHANNEL,RH.	1	1
- 23	96-910011-191	. . . FORMER.	1	1
- 24	96-910011-193	. . . STRIP,LH CAP.	1	1
	96-910011-194	. . . STRIP,RH CAP.	1	1
- 25	96-910012-15	. . . ANGLE	1	1
- 26	96-910012-17	. . . ANGLE	1	1
- 27	96-910012-11	. . . DOUBLER,OIL FILLER DOOR	1	1
- 28	96-910011-203	. . . REINFORCEMENT,OIL FILLER DOOR HINGE . . .	1	1
- 29	96-910012-69	. . . ANGLE,LH SEAL SUPPORT	1	1
	96-910012-71	. . . ANGLE,RH SEAL SUPPORT	1	1
- 30	96-910012-49	. . . ANGLE,LH SEAL SUPPORT	1	1
	96-910012-50	. . . ANGLE,RH SEAL SUPPORT	1	1
- 31	96-910012-55	. . . ANGLE,CENTER SEAL SUPPORT	1	1
- 32	96-910012-51	. . . SEAL,LH OUTBD	1	9
	58-910011-77	. . . SEAL,LH OUTBD	1	10
- 33	96-910012-51	. . . SEAL,RH OUTBD	1	1
- 34	96-910012-57	. . . SEAL,CENTER	1	1
- 35	96-910012-45	. . . DOUBLER,INDUCTION AIR SCOOP	1	1
- 36	96-910012-47	. . . ANGLE,LH.	1	1
	96-910012-48	. . . ANGLE,RH.	1	1
- 37	96-910012-13	. . . ANGLE,LH.	1	1
	96-910012-14	. . . ANGLE,RH.	1	1
- 38	96-910012-23	. . . DOUBLER,LH.	1	1
	96-910012-24	. . . DOUBLER,RH.	1	1
- 39	96-910011-115	. . . BRACKET,NOSE BUG LH	1	1
	96-910011-116	. . . BRACKET,NOSE BUG RH	1	1
- 40	96-910012-19	. . . SKIN,UPPER COWL	1	1
- 41	98265-2-180	. . . STUD/LESS ELECTRIC DEICE/	8	1
	98265-2-190	. . . STUD/WITH ELECTRIC DEICE/	8	11
- 42	98265-2-210	. . . STUD/LESS ELECTRIC DEICE/	2	1
	98265-2-230	. . . STUD/WITH ELECTRIC DEICE/	2	11
	130177-5	. . . PIN,CROSS/SUPERSEDES 99836/	10	1
- 43	214-16	. . . RECEPTACLE.	14	1
	295250-5	. . . GROMMET	10	1
	40R8-16-1	. . . SHIM,RECEPTACLE	10	1
- 44	R 96-910012-87	. . . BRACKET/LESS ELECTRIC DEICE/SEE . . . . . 0118-243/ BEECHCRAFT SERVICE INSTRUCTION 0118-2	1	2
- 45	96-910012-91	. . . GUSSET/LESS ELECTRIC DEICE/	1	2
- 46	96-910012-109	. . . SPACER/LESS SURFACE DEICE/.	1	2
	50-939118-12	. . . DOOR ASSY,OIL FILLER.	1	1
- 47	50-939118-2	. . . . HINGE/COWL HALF/.	1	1
- 48	50-939118-4	. . . . HINGE/FILLER DOOR HALF/	1	1
- 49	105774C-ZE00208	. . . . PIN,HINGE	1	1
- 50	50-939118-6	. . . . PLATE,DOOR.	1	1
- 51	50-939118-10	. . . . REINFORCEMENT	1	1
- 52	H5000-032-040	. . . . LATCH ASSY.	1	1

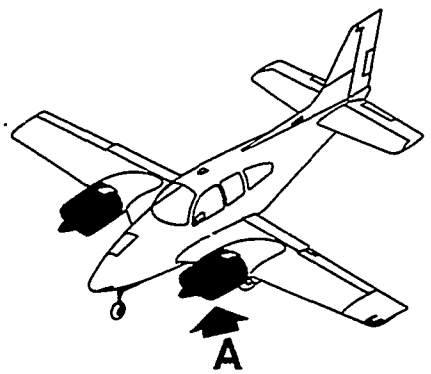

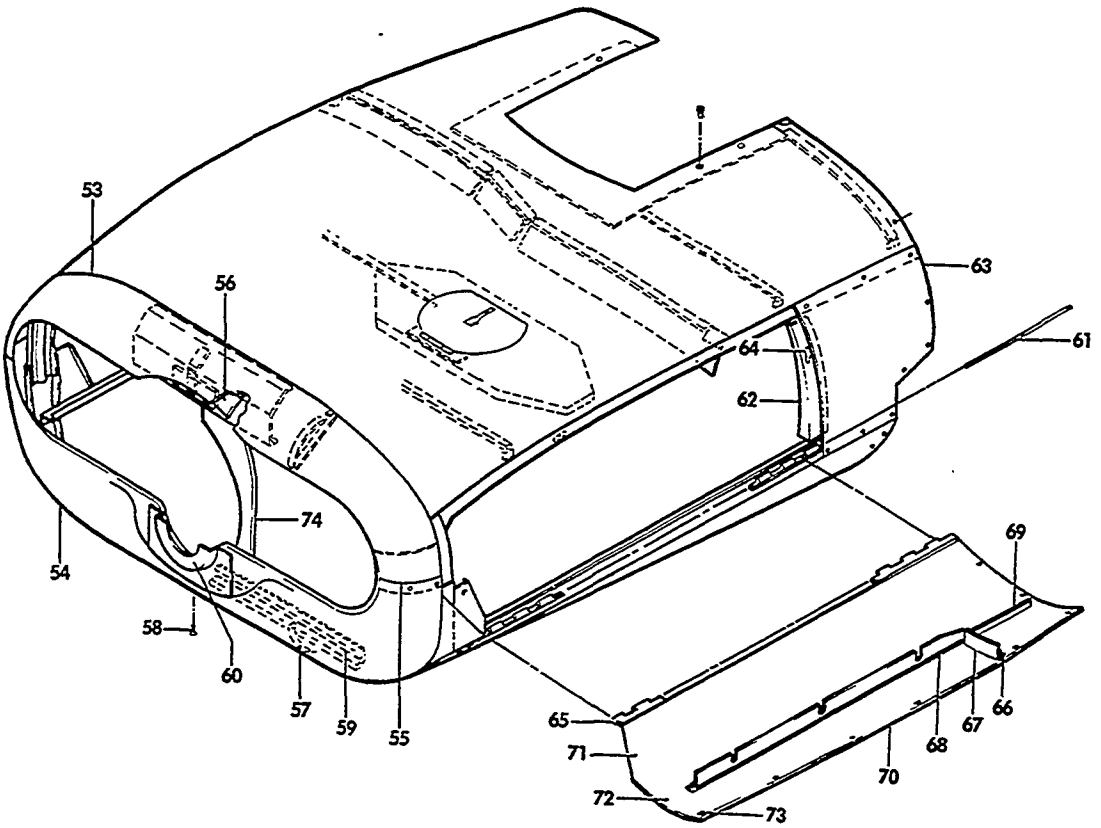

VIEW A

E55-242-19

FIGURE 12-01.ENGINE COWLING
/SHEET 3 OF 4 SHEETS/

SUB-SECT UNIT & ITEM NO.		PART NO.	DESCRIPTION 1 2 3 4 5 6 7	UNITS PER ASSY	USABLE ON CODE
12-01		96-910012-612	. . NOSE BUG ASSY,COWL.	1	1
- 53		96-910011-219	. . . BUG,UPPER NOSE/UNTRIMMED/	1	1
- 54		96-910012-103	. . . BUG,LOWER NOSE/UNTRIMMED/	1	1
- 55		96-910012-101	. . . PLATE,LH SPLICE	1	1
		96-910012-102	. . . PLATE,RH SPLICE	1	1
- 56		96-910011-129	. . . DOUBLER	1	1
- 57		96-910011-123	. . . ANGLE,LH.	1	1
		96-910011-124	. . . ANGLE,RH.	1	1
- 58		F5-35	. . . STUD,NOSE BUG	12	1
		GF5-175	. . . GROMMET	12	1
- 59		96-910012-37	. . . FORMER,LH	1	12
		96-910012-125	. . . FORMER,LH/MAY BE USED AS SPARES FOR -37/.	1	13
- 60		96-910012-39	. . . REINFORCEMENT	1	1
		96-910012-610	. . DOOR ASSY,LH COWL/FWD & AFT/.	1	1
		96-910012-611	. . DOOR ASSY,RH COWL/FWD & AFT/.	1	1
			/ATTACHING PARTS/		
- 61	R	AN253-2-3200	. . PIN,HINGE	2	1
			——*——		
		96-910011-183	. . . DOOR ASSY,LH AFT COWL	1	1
		96-910011-184	. . . DOOR ASSY,RH AFT COWL	1	1
			/ATTACHING PARTS/		
		AN509-10R	. . . SCREW	4	
		MS24694S50	. . . SCREW	5	
		NAS1024A3K	. . . NUTPLATE.	4	
			——*——		
- 62		96-910011-181	. . . . ANGLE,LH.	1	1
		96-910011-182	. . . . ANGLE,RH.	1	1
- 63		96-910011-179	. . . . SKIN,LH AFT DOOR.	1	1
		96-910011-180	. . . . SKIN,RH AFT COWL.	1	1
- 64		214-16	. . . . RECEPTACLE.	2	1
		40R8-16-1	. . . . SHIM.	2	1
- 65		96-910011-47	. . . HINGE,LH HALF	1	1
		96-910011-48	. . . HINGE,RH HALF	1	1
- 66		96-910012-61	. . . ANGLE,LH.	1	1
		96-910012-62	. . . ANGLE,RH.	1	1
- 67		96-910012-63	. . . SEAL,LH	1	1
		96-910012-64	. . . SEAL,RH	1	1
- 68		96-910012-5	. . . SEAL,LH	1	1
		96-910012-68	. . . SEAL,RH	1	1
- 69		96-910012-41	. . . ANGLE,LH.	1	1
		96-910012-42	. . . ANGLE,RH.	1	1
- 70		96-910012-65	. . . SKIN,LH FWD DOOR.	1	1
		96-910012-66	. . . SKIN,RH FWD DOOR.	1	1
- 71		40S5-2	. . . STUD.	3	1
- 72		40S5-3	. . . STUD.	6	1
- 73		40S5-4	. . . STUD.	1	1
		4002G	. . . GROMMET,STUD.	10	1
		E4G	. . . RING,SNAP	10	1
- 74		96-910012-121	. . PLATE ASSY/LESS DEICE/.	1	2
			/ATTACHING PARTS/		
		AN3-4A	. . BOLT.	3	
		AN960-10	. . WASHER.	3	
		MS20365-1032	. . NUT	3	
			——*——		
		96-910012-123	. . . PLATE	2	2

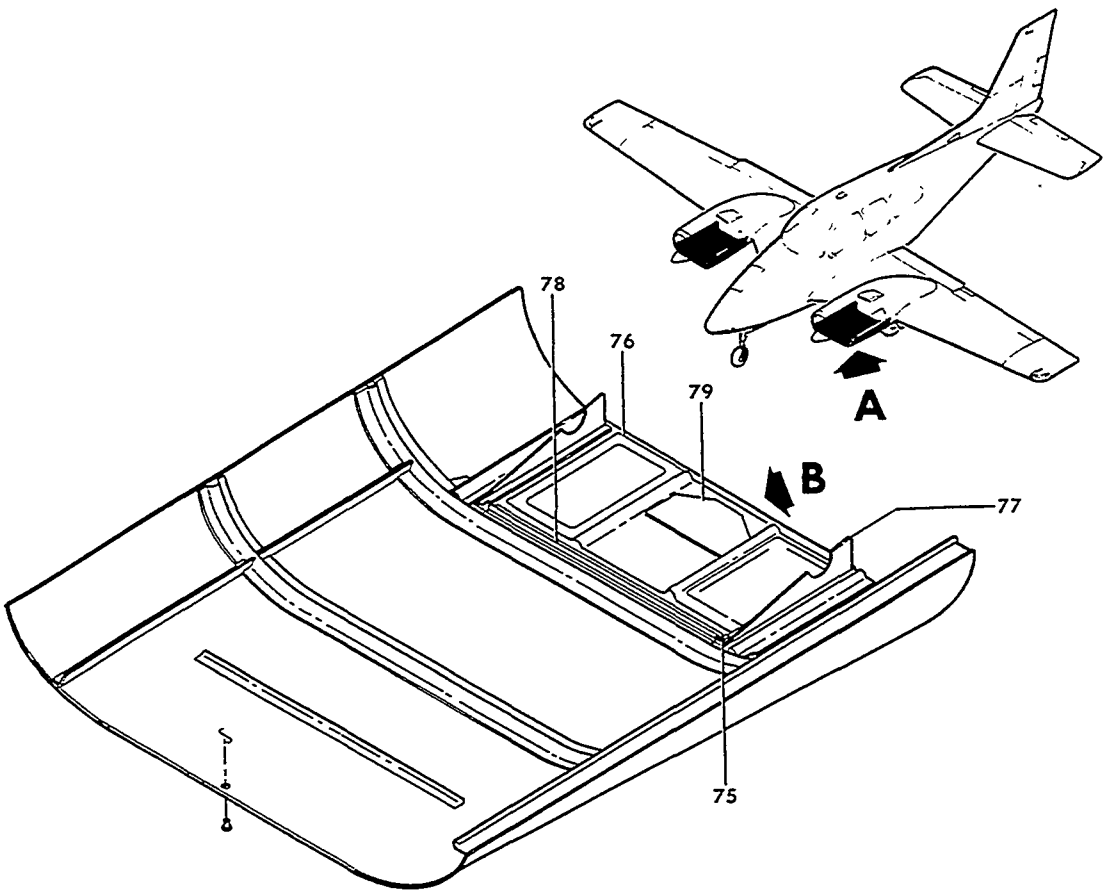

VIEW A

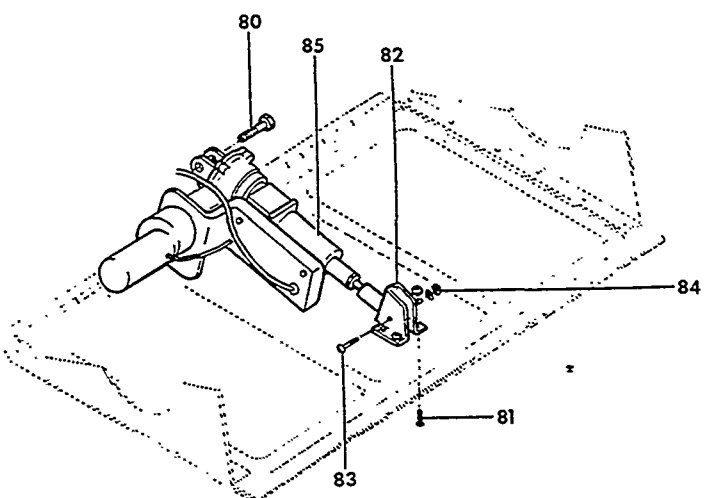

VIEW B

E55-242-20

FIGURE 12-01. ENGINE COWLING
/SHEET 4 OF 4 SHEETS/

SUB-SECT UNIT & ITEM NO.	PART NO.	DESCRIPTION 1 2 3 4 5 6 7	UNITS PER ASSY	USABLE ON CODE
12-01	R 96-910016-57	. . DOOR ASSY,COWL FLAP/SEE BEECHCRAFT. . . . . SERVICE INSTRUCTION 0652-242/ FOR MANUAL OPERATED COWL FLAP SYSTEM/ /ATTACHING PARTS/	1	1
- 75	MS20253-2-1788	. . PIN,HINGE	1	
- 76	96-910016-7	. . . WELD ASSY,COWL FLAP	1	1
- 77	96-910016-55	. . . ANGLE,LH.	1	1
	96-910016-56	. . . ANGLE,RH.	1	1
- 78	96-910016-41	. . . HINGE	1	1
- 79	96-910016-43	. . . DOUBLER	1	1
	96-910016-613	. ACTUATOR ASSY,COWL FLAP . . . . . /ATTACHING PARTS/	1	1
- 80	AN3-12	. BOLT.	1	
	AN960-10	. WASHER.	1	
	AN310-3	. NUT,CASTELLATED	1	
	MS24665-132	. PIN,COTTER.	1	
- 81	AN525-832R	. SCREW	4	
	AN960-8	. WASHER.	4	
	MS20365-832	. NUT	4	
- 82	R 96-910016-53	. . BRACKET . . . . . /ATTACHING PARTS/	1	1
- 83	AN3-12/M/	. . BOLT.	1	
	AN960-10	. . WASHER.	1	
	100696S-ZS004	. . SPACER.	1	
- 84	AN310-3	. . NUT,CASTELLATED	1	
	MS24665-132	. . PIN,COTTER.	1	
- 85	96-380021-17	. . ACTUATOR ASSY,COWL FLAP	1	1

CODES OF EFFECTIVITY

1	TE-1 THRU TE-942 EXCEPT TE-938	2	TE-716 THRU TE-942 EXCEPT TE-938
3	TE-1 THRU TE-868	4	TE-869 THRU TE-942 EXCEPT TE-938
5	TE-865 THRU TE-871	6	TE-872 THRU TE-942 EXCEPT TE-938
7	TE-1 THRU TE-866	8	TE-867 AND TE-868
9	TE-1 THRU TE-884	10	TE-885 THRU TE-942 EXCEPT TE-938
11	TE-850 THRU TE-942 EXCEPT TE-936	12	TE-1 THRU TE-921
13	TE-922 THRU TE-942 EXCEPT TE-938		

71-60-01
ENGINE BAFFLES
TC-1 THRU TC-1607

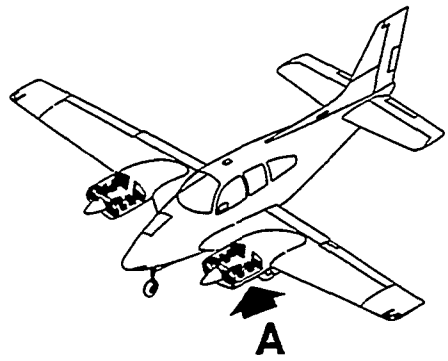

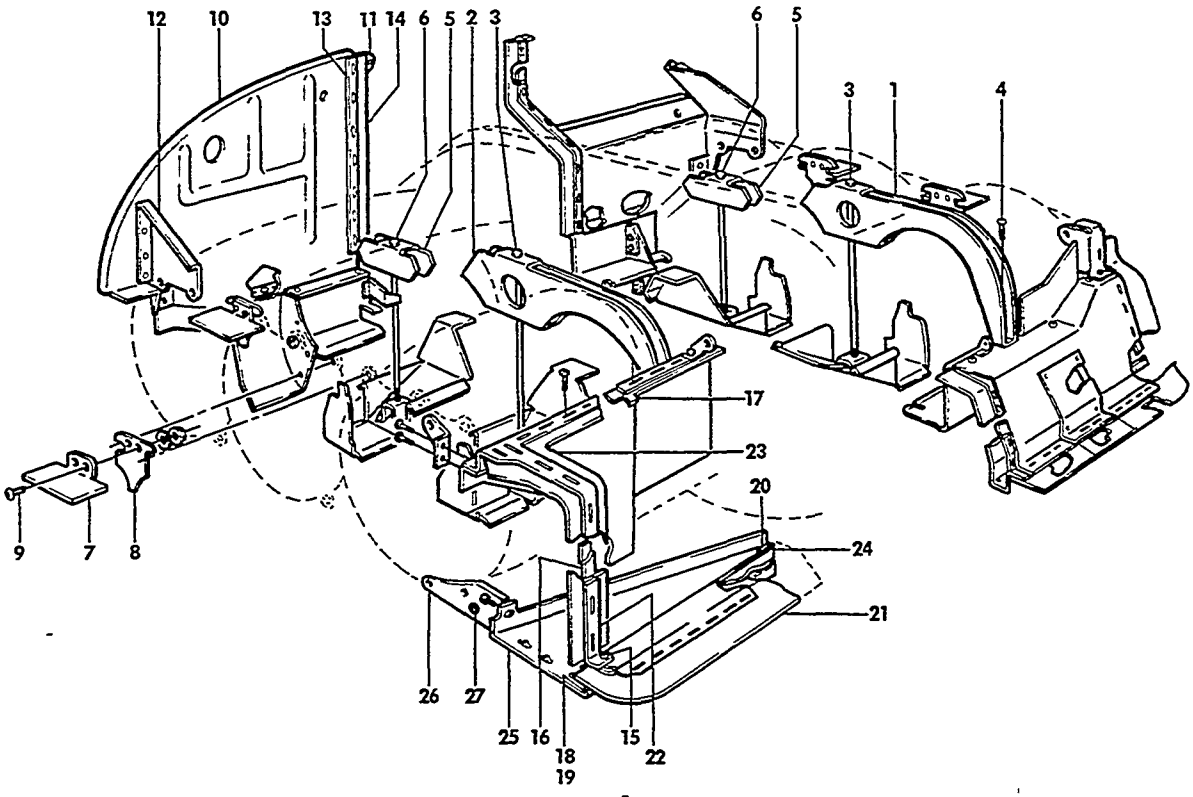

VIEW A

BSS-244-16

FIGURE 60-01.ENGINE BAFFLES
/SHEET 1 OF 3 SHEETS/

SUB-SECT UNIT & ITEM NO.	PART NO.	DESCRIPTION 1 2 3 4 5 6 7	UNITS PER ASSY	USABLE ON CODE
60-01	96-910015	BAFFLE INSTL,ENGINE	NP	1
- 1	35-910215	. SUPPORT,FRONT BAFFLE/LH/.	1	1
- 2	R 35-910294	. SUPPORT,FRONT BAFFLE/RH/.	1	1
		/ATTACHING PARTS/		
- 3	AN3-71A	. BOLT.	1	
- 4	AN515-6R5	. SCREW	1	
	AN960-6	. WASHER.	1	
	AN365-632	. NUT	1	
		----*----		
- 5	35-910216	. SUPPORT,INTERCYLINDER	2	1
		/ATTACHING PARTS/		
- 6	AN3-36A	. BOLT.	2	
		----*----		
- 7	45-910315-1	. CLIP,BAFFLE SUPPORT ANGLE	4	1
- 8	45-910314	. PLATE,BAFFLE SUPPORT.	4	1
		/ATTACHING PARTS/		
- 9	AN515-8R	. SCREW	1	
	AN960-8	. WASHER.	1	
	MS20365-832	. NUT	1	
		----*----		
	96-910015-51	. BAFFLE ASSY,REAR/RH/.	1	2
	96-910015-171	. BAFFLE ASSY,REAR/RH/.	1	3
	96-910015-31	. . BAFFLE,REAR/RH/	1	2
- 10	96-910015-167	. . BAFFLE,REAR/RH/	1	3
- 11	96-910015-35	. . CLIP,BAFFLE	1	1
- 12	96-910015-37	. . SUPPORT,BAFFLE.	1	1
- 13	96-910015-69	. . STRIP,CAP	1	1
- 14	96-910015-33	. . SEAL,REAR BAFFLE.	1	1
	96-910015-21	. BAFFLE ASSY,OIL COOLER.	1	4
	96-910015-155	. BAFFLE ASSY,OIL COOLER.	1	5
		/ATTACHING PARTS/		
- 15	AN515-8R7	. SCREW	4	
	AN960-8	. WASHER.	4	
		----*----		
	96-910015-7	. . STRIP,BACK.	1	4
- 16	96-910015-151	. . STRIP,BACK.	1	5
- 17	96-910015-63	. . STRIP,BACK.	1	1
- 18	96-910015-65	. . STRIP,BACK.	1	1
- 19	96-910015-67	. . STRIP,BACK.	1	1
- 20	96-910015-173	. . CLIP/SUPERSEDES 96-910015-105/.	1	1
	AN525R8-18	. . SCREW	2	1
	102933D5ZX0750	. . SPACER.	2	1
	AN960-8	. . WASHER.	2	1
	MS20365-832	. . NUT	2	1
- 21	96-910015-11	. . SEAL.	1	1
	96-910015-15	. . BAFFLE.	1	4
- 22	96-910015-153	. . BAFFLE.	1	5
	96-910015-17	. . SEAL.	1	4
- 23	96-910015-157	. . SEAL.	1	5
- 24	96-910015-19	. . STRIP,CAP	1	1
	96-910015-137	. . BAFFLE.	1	4
- 25	96-910015-149	. . BAFFLE.	1	5
	96-910015-133	. . STRIP	1	1
- 26	96-910015-135	. SUPPORT,BAFFLE.	1	1
- 27	AN931-6S16	. GROMMET	1	1

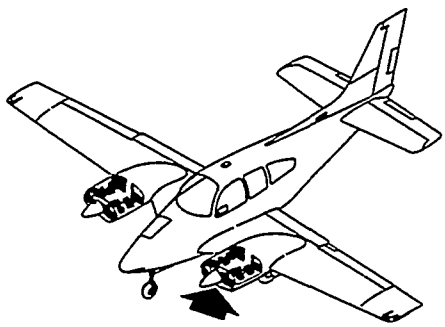

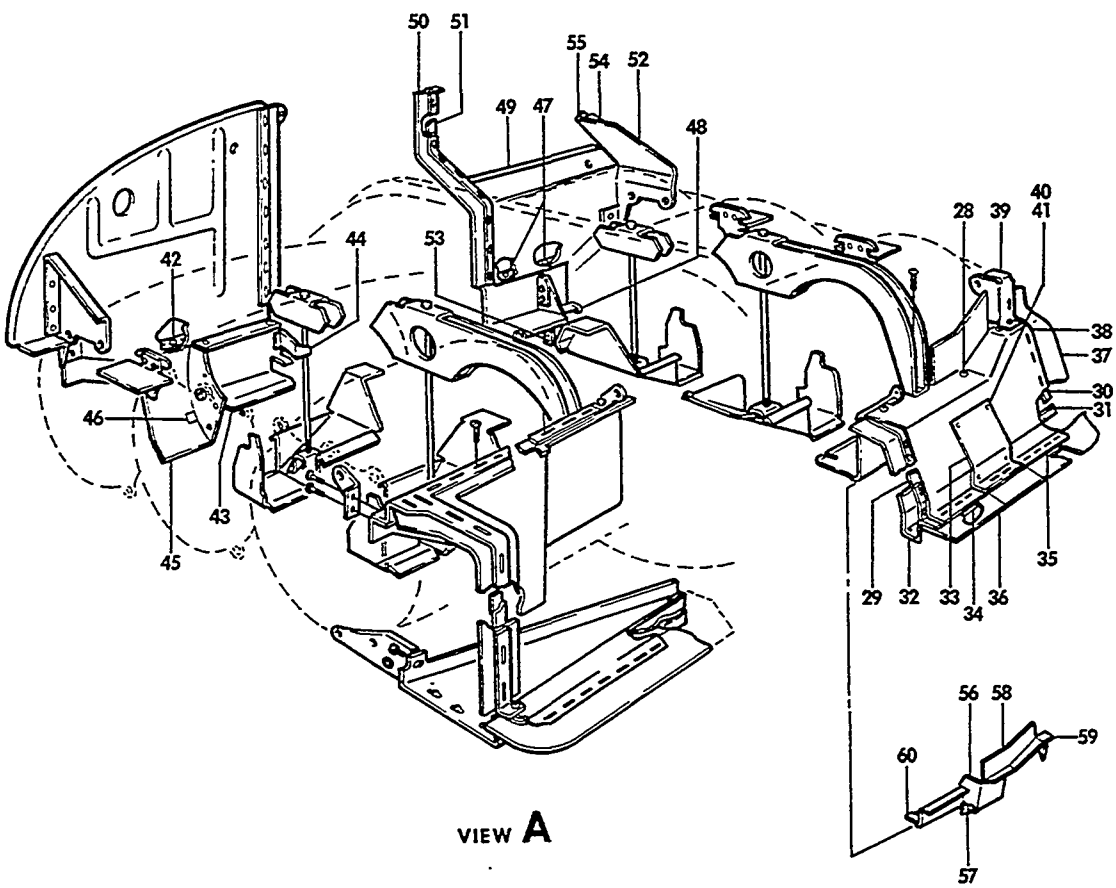

B65-244-17

FIGURE 60-01.ENGINE BAFFLES
/SHEET 2 OF 3 SHEETS/

SUB-SECT UNIT & ITEM NO.		PART NO.	DESCRIPTION 1 2 3 4 5 6 7	UNITS PER ASSY	USABLE ON CODE
60-01	R	96-910015-183	BAFFLE ASSY,FRONT/LH/SPARES FOR 96-910015-131	1	1
			/ATTACHING PARTS/		
- 28		AN515-6R5	SCREW	3	
		AN960-6	WASHER	3	
		AN365-632	NUT	3	
- 29	R	96-910015-179	STRIP,CAP	1	1
- 30		96-910015-25	STRIP,CAP	1	1
- 31		96-910015-45	CLIP	1	1
- 32	R	96-910015-185	SEAL	1	1
- 33		96-910015-113	DOOR ASSY	1	1
		96-910015-115	DOOR	1	1
		96-910015-119	SEAL	1	1
		96-910015-115	STRIP,CAP	1	1
- 34		96-910015-121	STRIP,CAP	1	1
- 35		96-910015-123	STRIP,CAP	1	1
- 36		96-910015-125	SEAL	1	1
- 37		96-910015-127	SEAL	1	1
- 38	R	96-910015-181	BAFFLE,FRONT/LH/	1	1
	R	96-910015-189	CAP,PLATE	1	1
- 39		96-910015-89	BAFFLE	1	1
			/ATTACHING PARTS/		
- 40		AN515-8R5	SCREW	4	
- 41		MK1000-832	NUTPLATE	4	
		96-910015-71	BAFFLE ASSY,REAR/RH/	1	1
			/ATTACHING PARTS/		
- 42		AN515-6R5	SCREW	4	
		AN960-6	WASHER	4	
		AN365-632	NUT	4	
- 43		96-910015-77	BAFFLE,REAR/RH/	1	1
- 44		96-910015-55	CLIP,REAR BAFFLE/RH/	1	1
- 45		35-910066-43	BAFFLE,REAR/RH/	1	1
- 46		35-910066-165	ANGLE	1	1
		96-910015-111	BAFFLE ASSY	1	2
		96-910015-169	BAFFLE ASSY	1	3
			/ATTACHING PARTS/		
- 47		AN520-10R	SCREW	3	
		AN366F1032	NUTPLATE	3	
- 48		96-910015-139	CLIP	1	1
		96-910015-107	BAFFLE,REAR/LH/	1	2
- 49		96-910015-165	BAFFLE,REAR/LH/	1	3
- 50		96-910015-91	SEAL	1	1
- 51		96-910015-93	STRIP,CAP	1	1
- 52		96-910015-41	SUPPORT	1	1
- 53		96-910015-109	SUPPORT	1	1
- 54		96-910015-85	SEAL	1	1
- 55		96-910015-87	STRIP,BACK	1	1
		96-910015-79	BAFFLE ASSY,FWD/LH/	1	1
- 56		35-910066-45	BAFFLE	1	1
- 57		35-910066-165	ANGLE	1	1
- 58		35-910066-241	BAFFLE	1	1
- 59		96-910015-81	SUPPORT	1	1
- 60		35-910066-41	BAFFLE	1	1

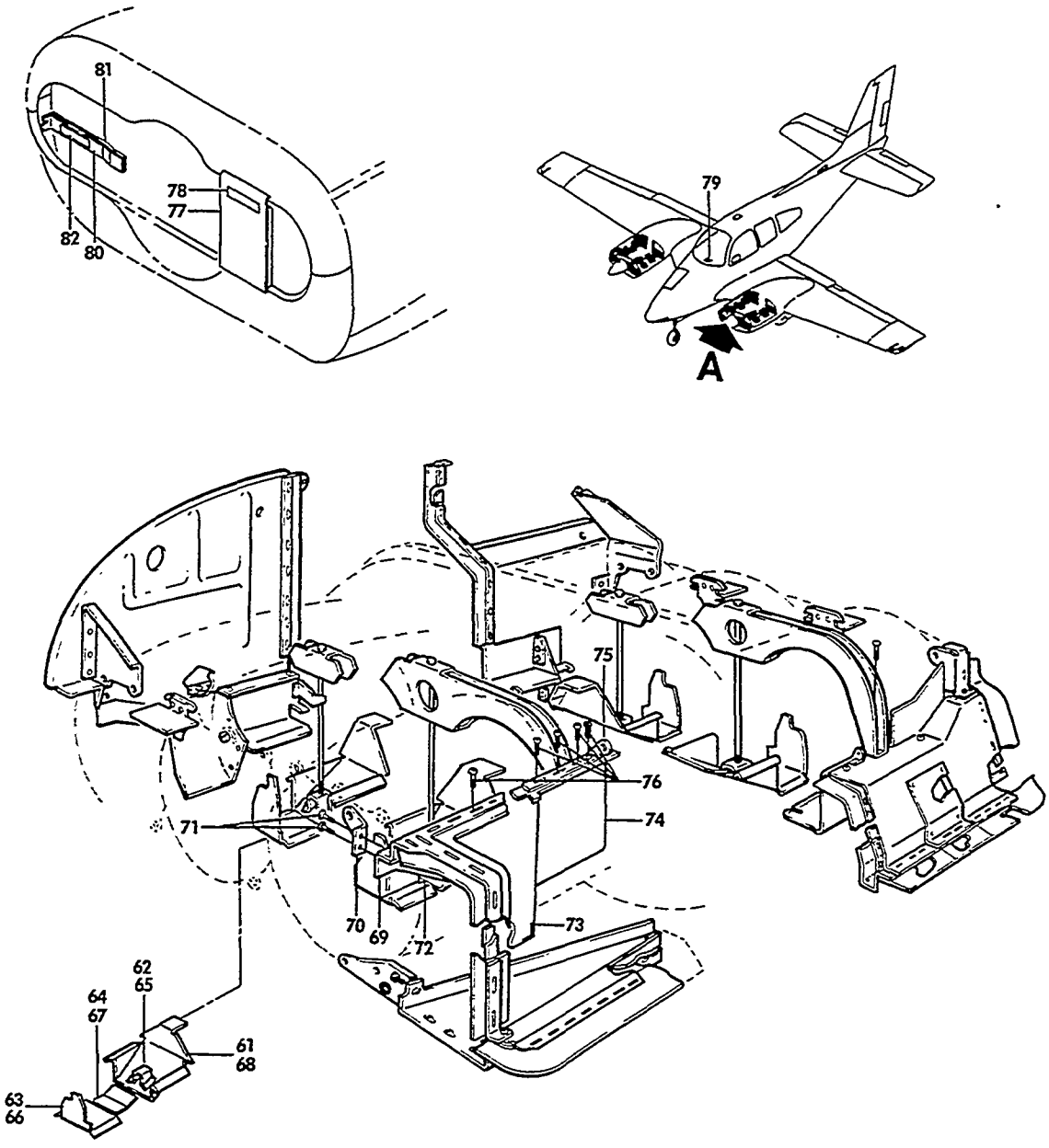

FIGURE 60-01.ENGINE BAFFLES
/SHEET 3 OF 3 SHEETS/

ATA CODE & INDEX NO.	PART NO.	DESCRIPTION 1 2 3 4 5 6 7	UNITS PER ASSY	USABLE ON CODE
60-01	96-910015-103	. BAFFLE ASSY,INTERCYLINDER FWD	1	1
- 61	96-910015-101	. . BAFFLE.	1	1
- 62	35-910066-77	. . SECTION,HAT	1	1
	HIS832BC100X200	. . NUTPLATE.	1	1
- 63	35-910066-97	. . BAFFLE.	1	1
- 64	35-910066-99	. . TAB	1	1
	AN931-12-17	. GROMMET	1	1
	35-910066-107	. BAFFLE ASSY,INTERCYLINDER	3	1
- 65	35-910066-77	. . SECTION,HAT	1	1
	HIS832BC100X200	. . NUTPLATE.	1	1
- 66	35-910066-97	. . BAFFLE.	1	1
- 67	35-910066-99	. . TAB	1	1
- 68	35-910066-101	. . BAFFLE.	1	1
	96-910015-75	. BAFFLE ASSY,FWD/RH/	1	4
	96-910015-163	. BAFFLE ASSY,FWD/RH/	1	5
	96-910015-97	. . BAFFLE ASSY	1	1
- 69	35-910066-183	. . . BAFFLE.	1	1
- 70	35-910066-193	. . . BRACKET	1	1
- 71	AN515-8R6	. . . SCREW	2	1
	MK1000-832	. . . NUTPLATE.	2	1
- 72	35-910066-135	. . . ANGLE	1	1
- 73	35-910066-165	. . . CLIP.	1	1
	HIS832BC100X200	. . . NUTPLATE.	3	1
	96-910015-95	. . BAFFLE ASSY	1	4
	96-910015-161	. . BAFFLE ASSY	1	5
	35-910066-187	. . . BAFFLE.	1	4
- 74	96-910015-159	. . . BAFFLE.	1	5
- 75	96-910015-73	. . . CLIP.	1	1
- 76	AN5158R6	. . . SCREW	4	1
	HIS832BC100X200	. . . NUTPLATE.	1	1
	NAS1025N0SK	. . . NUTPLATE.	1	1
	96-910017	BAFFLE INSTL,WINTER COWL.	NP	4
	96-910017-15	BAFFLE INST,WINTER COWL	NP	5
	96-910017-1	. BAFFLE ASSY	4	1
		/ATTACHING PARTS/		
	AN520-10-7	. SCREW	4	
	NAS697-A3	. NUTPLATE.	4	
		——*——		
- 77	96-910017-7	. . WELD ASSY	1	1
- 78	35-590080	. . PLACARD	1	1
- 79	96-910018	. PLACARD	1	1
	96-910017-9	. BAFFLE ASSY,OIL COOLER.	2	4
- 80	96-910017-11	. . BAFFLE.	1	4
- 81	96-910017-13	. . PAD/AFT SIDE OF BAFFLE/	1	4
- 82	35-590080	. . PLACARD	1	4

CODES OF EFFECTIVITY

1 TC-1 THRU TC-1607 2 TC-1 THRU TC-1385
3 TC-1386 THRU TC-1607 4 TC-1 THRU TC-280
5 TC-281 THRU TC-1607

"END"

71-62-01
ENGINE BAFFLES
TE-1 THRU TE-942,EXCEPT TE-938

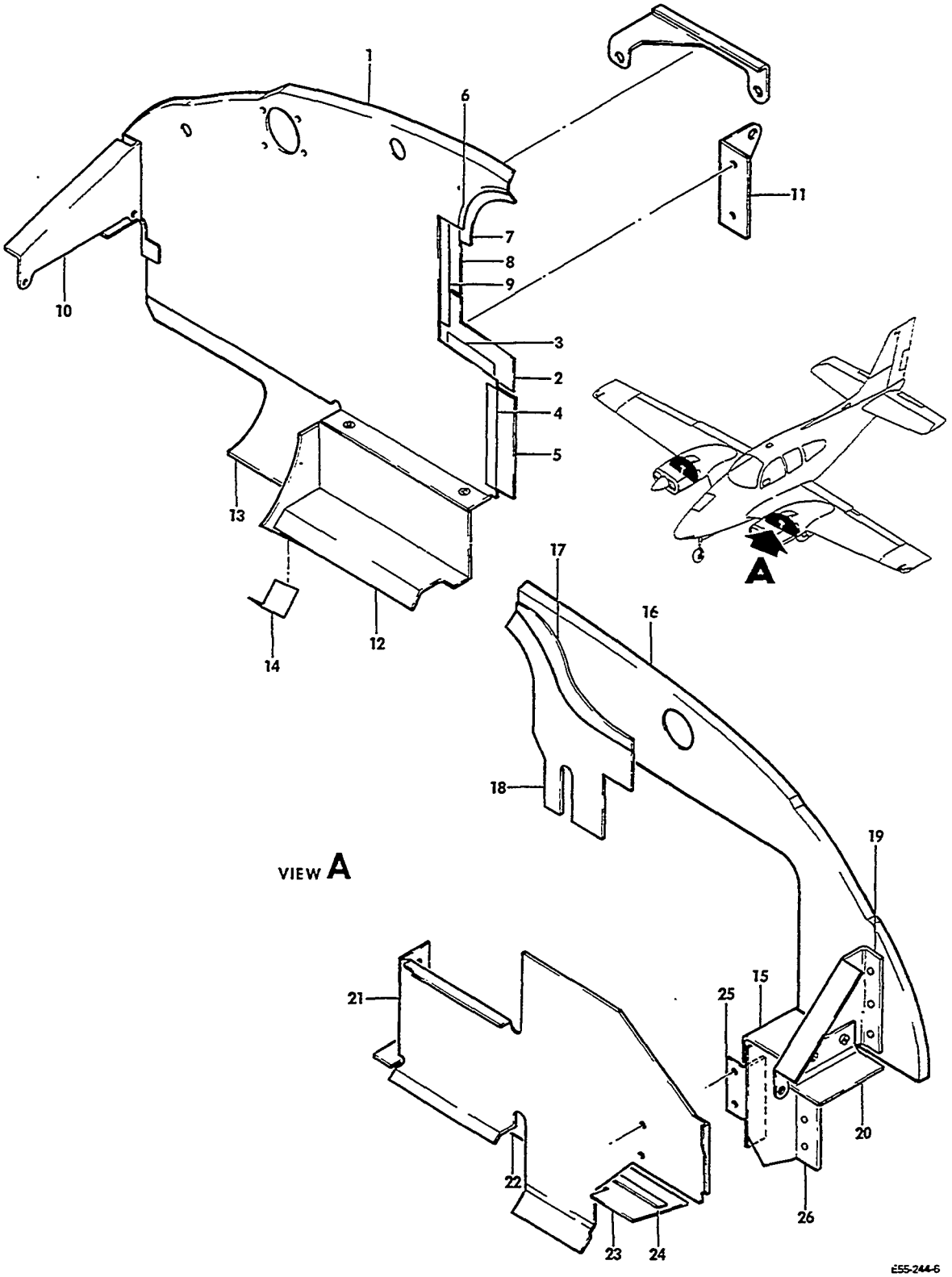

FIGURE 62-01.ENGINE BAFFLES
/SHEET 1 OF 3 SHEETS/

ATA CODE & INDEX NO.	PART NO.	DESCRIPTION 1 2 3 4 5 6 7	UNITS PER ASSY	USABLE ON CODE
62-01	96-910020	BAFFLE INSTL,ENGINE	NP	1
	96-910020-225	. BAFFLE ASSY,RH REAR UPPER	1	2
	96-910020-263	. BAFFLE ASSY,RH REAR UPPER	1	3
	96-910020-365	. BAFFLE ASSY,RH REAR UPPER	1	4
- 1	96-910020-251	. . BAFFLE,RH REAR UPPER.	1	2
	96-910020-261	. . BAFFLE,RH REAR UPPER.	1	3
	96-910020-361	. . BAFFLE,RH REAR UPPER.	1	4
- 2	96-910020-29	. . SEAL.	1	1
- 3	96-910020-31	. . STRIP,CAP	1	1
- 4	96-910020-33	. . STRIP,CAP	1	1
- 5	96-910020-35	. . SEAL.	1	1
- 6	96-910020-125	. . STRIP,CAP	1	1
- 7	96-910020-127	. . SEAL.	1	1
- 8	96-910020-129	. . SEAL.	1	1
- 9	96-910020-131	. . STRIP,CAP	1	1
- 10	96-910020-223	. . SUPPORT	1	1
- 11	96-910020-257	. . CLIP.	1	1
		/ATTACHING PARTS/		
	AN3-3A/M/	. . BOLT.	2	
	AN960-10	. . WASHER.	2	
	MS20365	. . NUT	2	
		——*——		
	96-910020-221	. BAFFLE ASSY,RH LOWER REAR	1	1
		/ATTACHING PARTS/		
	AN515-6R5	. SCREW	5	
	AN960-6	. WASHER.	5	
	MS20365-632	. NUT	5	
		——*——		
- 12	96-910020-219	. . BAFFLE,RH REAR LOWER.	1	1
- 13	96-910020-249	. . BAFFLE,RH REAR LOWER.	1	1
- 14	35-910066-165	. . CLIP.	1	1
	96-910020-195	. BAFFLE ASSY,LH REAR UPPER	1	5
	96-910020-367	. BAFFLE ASSY,LH REAR UPPER	1	4
- 15	96-910020-233	. . BAFFLE,LH REAR UPPER.	1	1
		/ATTACHING PARTS/		
	AN520-10R	. . SCREW	1	
	AN960-10L	. . WASHER.	1	
	NAS697A3K	. . NUTPLATE.	1	
		——*——		
- 16	96-910020-183	. . BAFFLE,LH REAR UPPER.	1	5
	96-910020-363	. . BAFFLE,LH REAR UPPER.	1	4
- 17	96-910020-181	. . STRIP,CAP	1	1
- 18	96-910020-157	. . SEAL.	1	1
- 19	96-910020-173	. . SUPPORT	1	1
- 20	96-910020-235	. . CLIP.	1	1
		/ATTACHING PARTS/		
	AN520-10R4	. . SCREW	2	
	AN960-10L	. . WASHER.	2	
	MS20365-1032C	. . NUT	2	
		——*——		
	96-910020-229	. BAFFLE ASSY,LH REAR LOWER	1	1
		/ATTACHING PARTS/		
	AN520-10R	. SCREW	11	
	AN960-10L	. WASHER.	11	
	MS20365-1032C	. NUT	9	
	NAS697A3K	. NUTPLATE.	2	
		——*——		
- 21	96-910020-245	. . BAFFLE,LH REAR LOWER.	1	1
- 22	96-910020-247	. . ANGLE	1	1
- 23	96-910020-189	. . SEAL.	1	1
- 24	96-910020-191	. . STRIP,CAP	1	1
- 25	96-910020-215	. . ANGLE ASSY.	1	1
- 26	96-910020-243	. BAFFLE,LH REAR LOWER.	1	1

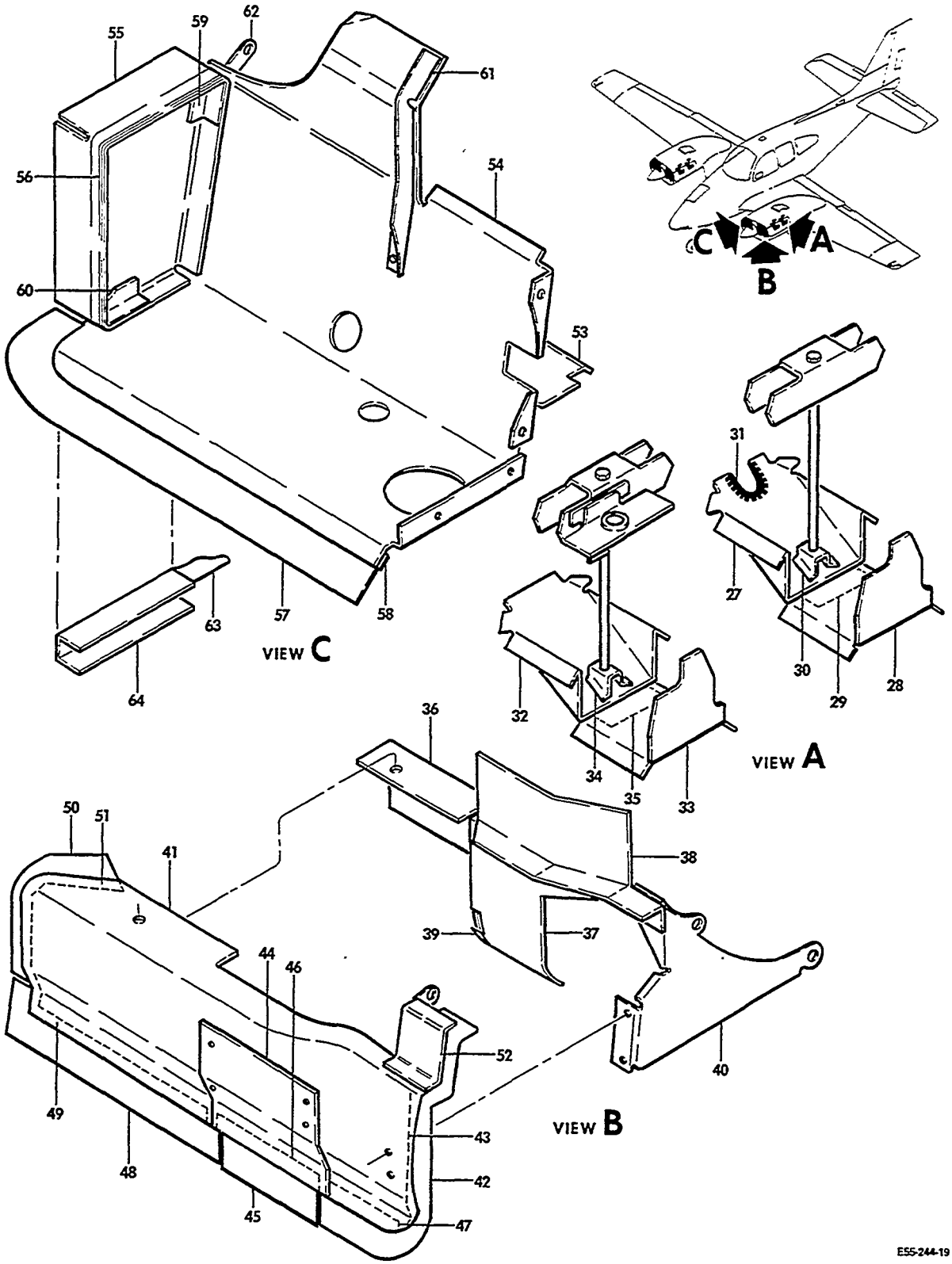

FIGURE 62-01.ENGINE BAFFLES
/SHEET 2 OF 3 SHEETS/

ATA CODE & INDEX NO.	PART NO.	DESCRIPTION 1 2 3 4 5 6 7	UNITS PER ASSY	USABLE ON CODE
62-01	96-910020-85	. BAFFLE ASSY,LH REAR INTERCYLINDER	1	1
- 27	96-910020-87	. . BAFFLE.	1	1
- 28	35-910066-97	. . BAFFLE.	1	1
- 29	35-910066-99	. . TAB	1	1
- 30	35-910066-77	. . SECTION,HAT	1	1
- 31	96-910020-253	. . GROMMET	1	1
	NAS680A3	. . NUTPLATE.	1	1
	AN366F832	. . NUTPLATE.	1	1
	AN960-8	. . WASHER.	1	1
	AN515-8R8	. . SCREW	1	1
	96-910020-151	. BAFFLE ASSY/RH AFT,LH & RH FWD/	3	1
- 32	96-910020-149	. . BAFFLE.	1	1
- 33	35-910066-97	. . BAFFLE.	1	1
- 34	35-910066-77	. . SECTION,HAT	1	1
- 35	35-910066-99	. . CLIP.	1	1
	HIS832BC100	. . NUTPLATE.	1	1
	NAS680A3	. . NUTPLATE.	1	1
	AN515-8R6	. . SCREW	1	1
	96-910020-81	. BAFFLE ASSY,LH FWD UPPER.	1	1
- 36	96-910020-83	. . BAFFLE.	1	1
- 37	96-910020-259	. . BAFFLE.	1	1
- 38	35-910066-241	. . BAFFLE.	1	1
- 39	35-910016-165	. . CLIP,BAFFLE	1	1
- 40	96-910015-81	. . SUPPORT,BAFFLE.	1	1
	96-910020-3	. BAFFLE ASSY,LH FWD LOWER/COMPLETE/.	1	1
	96-910020-5	. . BAFFLE ASSY	1	1
- 41	96-910020-23	. . . BAFFLE,LOWER LH FWD	1	1
- 42	96-910020-7	. . . SEAL.	1	1
- 43	96-910020-25	. . . STRIP,CAP	1	1
	96-910020-19	. . . DOOR ASSY	1	1
		/ATTACHING PARTS/		
	AN515-8R5	. . . SCREW	4	
	MK1000-832	. . . NUTPLATE.	4	
		——*——		
- 44	96-910020-21	. . . . DOOR.	1	1
- 45	96-910020-13	. . . . SEAL.	1	1
- 46	96-910020-11	. . . . STRIP,CAP	1	1
- 47	96-910020-9	. . . STRIP,CAP	1	1
- 48	96-910020-17	. . . SEAL.	1	1
- 49	96-910020-15	. . . STRIP,CAP	1	1
- 50	96-910020-117	. . . SEAL.	1	1
- 51	96-910020-119	. . . STRIP,CAP	1	1
- 52	96-910015-89	. . BAFFLE.	1	1
	96-910020-207	. BAFFLE ASSY RH FWD/USE WITH DELCOTRON ALT/.	1	6
	96-910020-265	. BAFFLE ASSY,RH FWD/USE WITH PRESTOLITE ALT/	1	7
- 53	96-910020-213	. . BAFFLE.	1	1
- 54	96-910020-201	. . BAFFLE.	1	6
	96-910020-267	. . BAFFLE.	1	7
- 55	96-910020-63	. . SEAL.	1	1
- 56	96-910020-65	. . STRIP,CAP	1	1
- 57	96-910020-67	. . SEAL.	1	1
- 58	96-910020-69	. . STRIP,CAP	1	1
- 59	96-910020-199	. . PLATE,END	1	1
- 60	96-910020-209	. . STIFFENER	1	1
- 61	96-910020-211	. . STIFFENER	1	1
- 62	96-910020-61	. . BRACKET	1	1
	96-910020-371	. . BUMPER.	1	7
	96-910020-205	. SUPPORT ASSY.	1	1
		/ATTACHING PARTS/		
	AN520-10	. SCREW	3	
	AN960-10L	. WASHER.	3	
	MS20365-1032	. NUT	3	
		——*——		
- 63	96-910020-39	. . PLATE	1	1
- 64	96-910020-203	. . CHANNEL	1	1

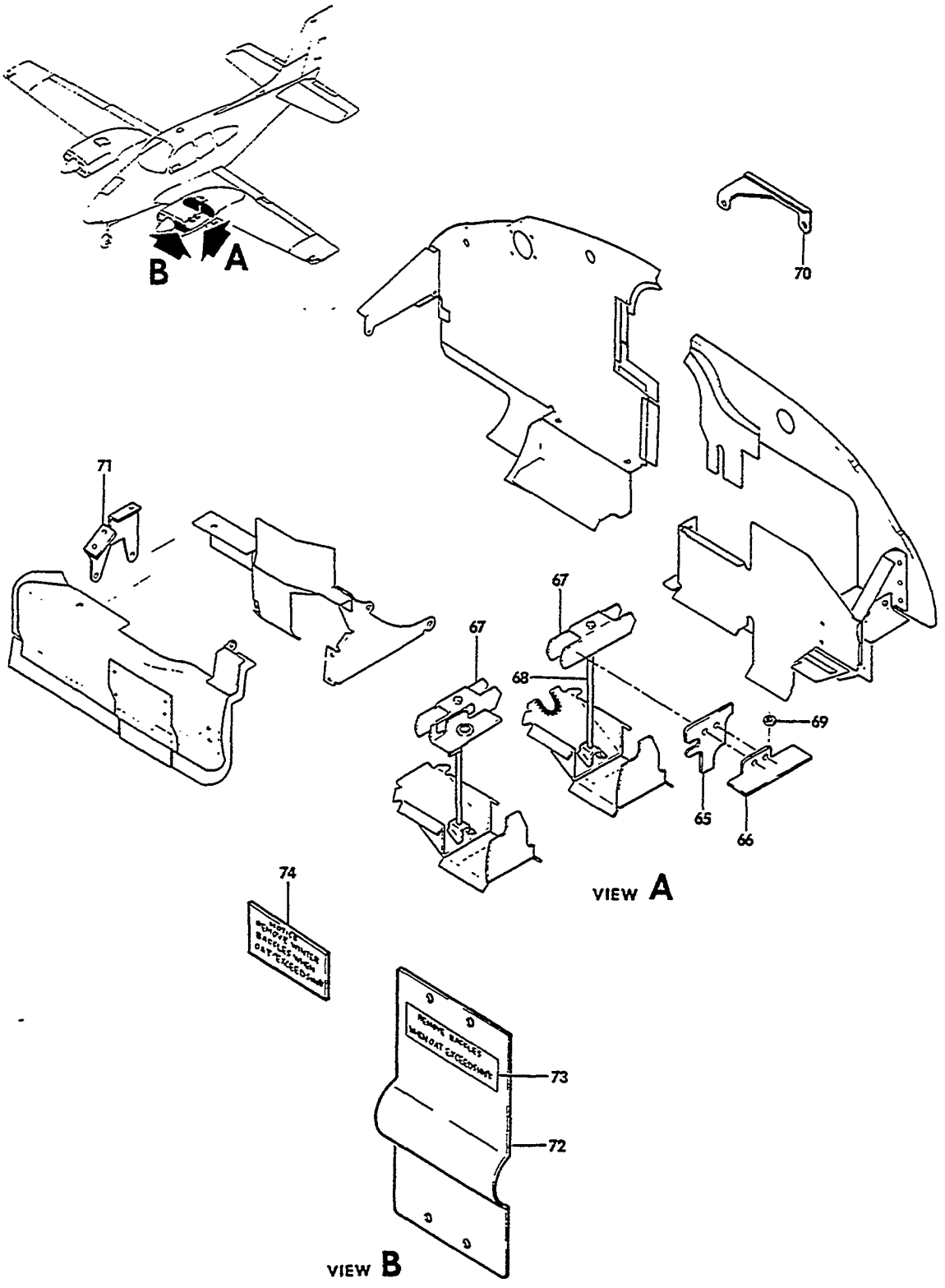

FIGURE 62-01.ENGINE BAFFLES
/SHEET 3 OF 3 SHEETS/

ATA CODE & INDEX NO.	PART NO.	DESCRIPTION 1 2 3 4 5 6 7	UNITS PER ASSY	USABLE ON CODE
62-01 - 65	45-910314	PLATE	4	1
- 66	45-910315-1	CLIP,IGNITION HARNESS	4	1
		/ATTACHING PARTS/		
	AN515-8R8	SCREW	2	
	AN960-8	WASHER	2	
	MS20365-832	NUT	2	
		----*----		
- 67	35-910216	SUPPORT,INTERCYLINDER BAFFLE	4	1
- 68	AN3-63A	BOLT	4	1
- 69	AN931-5S13	GROMMET,SPARK PLUG LEAD WIRE	4	1
- 70	96-910020-137	BRACKET	1	1
		/ATTACHING PARTS/		
	AN520-10R6	SCREW	1	
	AN960-10	WASHER	1	
	MS20365-1032C	NUT	1	
		----*----		
- 71	96-910020-255	BRACKET ASSY	1	1
	96-910020-77	BRACKET	1	1
	NAS1025A3K	NUTPLATE	3	1
	96-910034-13	BAFFLE INSTL,NOSE COWL/WINTER/	NP	1
	96-910034-11	BAFFLE ASSY	4	1
		/ATTACHING PARTS/		
	AN525-10-7	SCREW	4	
	NAS697A3	NUTPLATE	4	
		----*----		
- 72	96-910034-9	BAFFLE	1	1
- 73	96-910037-1	DECAL/REMOVE BAFFLE/	1	1
- 74	96-910038-1	DECAL/REMOVE BAFFLE/	2	1

CODES OF EFFECTIVITY

1 TE-1 THRU TE-902 EXCEPT TE-938
2 TE-1 THRU TE-451
3 TE-452 THRU TE-838
4 TE-839 THRU TE-942 EXCEPT TE-938
5 TE-1 THRU TE-838
6 TE-1 THRU TE-650
7 TE-651 THRU TE-942 EXCEPT TE-938

"END"

71-64-01
INDUCTION AIR SYSTEM
TC-1 THRU TC-1607

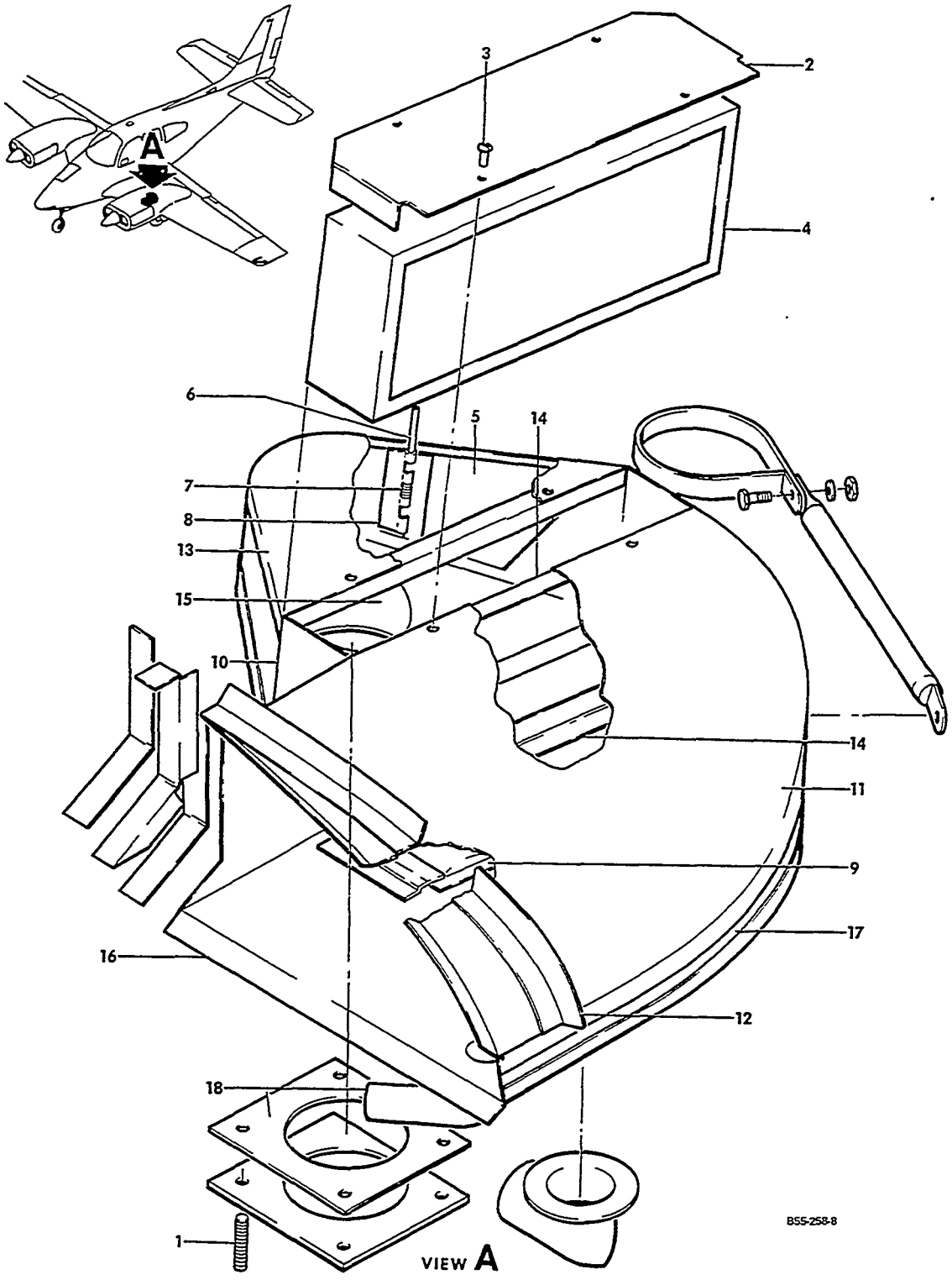

FIGURE 64-01.INDUCTION AIR SYSTEM
/SHEET 1 OF 2 SHEETS/

ATA CODE & INDEX NO.	PART NO.	DESCRIPTION 1 2 3 4 5 6 7	UNITS PER ASSY	USABLE ON CODE
64-01	96-919100-609	BOX ASSY,INDUCTION AIR/WITH GEN/LH/	1	1
	96-919100-615	BOX ASSY,INDUCTION AIR/WITH GEN/RH/	1	1
	96-919100-611	BOX ASSY,INDUCTION AIR/WITH DELCOTRON ALT/LH/	1	2
	96-919100-613	BOX ASSY,INDUCTION AIR/WITH DELCOTRON ALT/RH/	1	2
	96-919100-617	BOX ASSY,INDUCTION AIR/WITH PRESTOLITE ALT/LH/	1	3
	96-919100-618	BOX ASSY,INDUCTION AIR/WITH PRESTOLITE ALT/RH/	1	3
		/ATTACHING PARTS/		
- 1	AN125964	STUD	4	
	AN960-416	WASHER	4	
	MS20365-428	NUT	4	
		----*----		
	96-919100-33	. COVER,AIR FILTER	1	4
- 2	96-919100-91	. COVER,AIR FILTER	1	5
		/ATTACHING PARTS/		
	AN515-8R	. SCREW	10	4
- 3	A4-30	. FASTENER	4	5
	S4-250	. SPRING	4	5
	GA4-250	. GROMMET	4	5
		----*----		
- 4	122601	. FILTER,AIR	1	1
- 5	96-919100-65	. DOOR,AIR BOX	1	1
	MS20253-2-500	. PIN,AIR BOX DOOR HINGE	1	6
- 6	MS20253-2-500	. PIN,AIR BOX DOOR HINGE	1	7
- 7	35-910288	. SPRING,AIR BOX DOOR	1	1
- 8	96-919100-61	. HINGE,HALF/HALF ATTACHED TO BOX/	1	1
	96-919100-63	. HINGE,HALF/HALF ATTACHED TO DOOR/	1	1
	96-919100-113	. COVER/WITH DELCOTRON ALT/	1	2
- 9	96-919100-127	. COVER/SUPERSEDES 96-919100-87/	1	1
		/ATTACHING PARTS/		
	AN3-3A	. BOLT	2	
	MK1000-3	. NUTPLATE	2	
		----*----		
	96-919100-129	. DOUBLER	1	1
- 10	96-919100-101	. PLATE	1	1
	96-919100-9	. COVER,AIR BOX	1	4
- 11	96-919100-97	. COVER,AIR BOX	1	5
- 12	96-919100-11	. BAFFLE,AIR BOX	1	1
	96-919100-69	. COVER,AIRBOX	1	4
- 13	96-919100-95	. COVER,AIR BOX	1	5
	96-919100-21	. ANGLE,AIR BOX	1	4
- 14	96-919100-103	. ANGLE,AIR BOX	2	5
- 15	96-919100-31	. WELD ASSY,AIR BOX BASE	1	1
	96-919100-109	. BOTTOM,AIR BOX/WITH DELCOTRON ALT/	1	2
- 16	96-919100-131	. BOTTOM,AIR BOX/SUPERSEDES 96-919100-73/	1	1
		/WITH GEN OR PRESTOLITE ALT/		
- 17	96-919100-71	. PLATE,SIDE	1	1
- 18	96-919100-75	. WELD ASSY,GENERATOR BLAST	1	1
	96-919100-119	. WELD ASSY,ALT BLAST TUBE/WITH DELCOTRON ALT/	1	2
	96-919100-147	. WELD ASSY,ALT BLAST TUBE/WITH PRESTOLITE ALT/	1	3

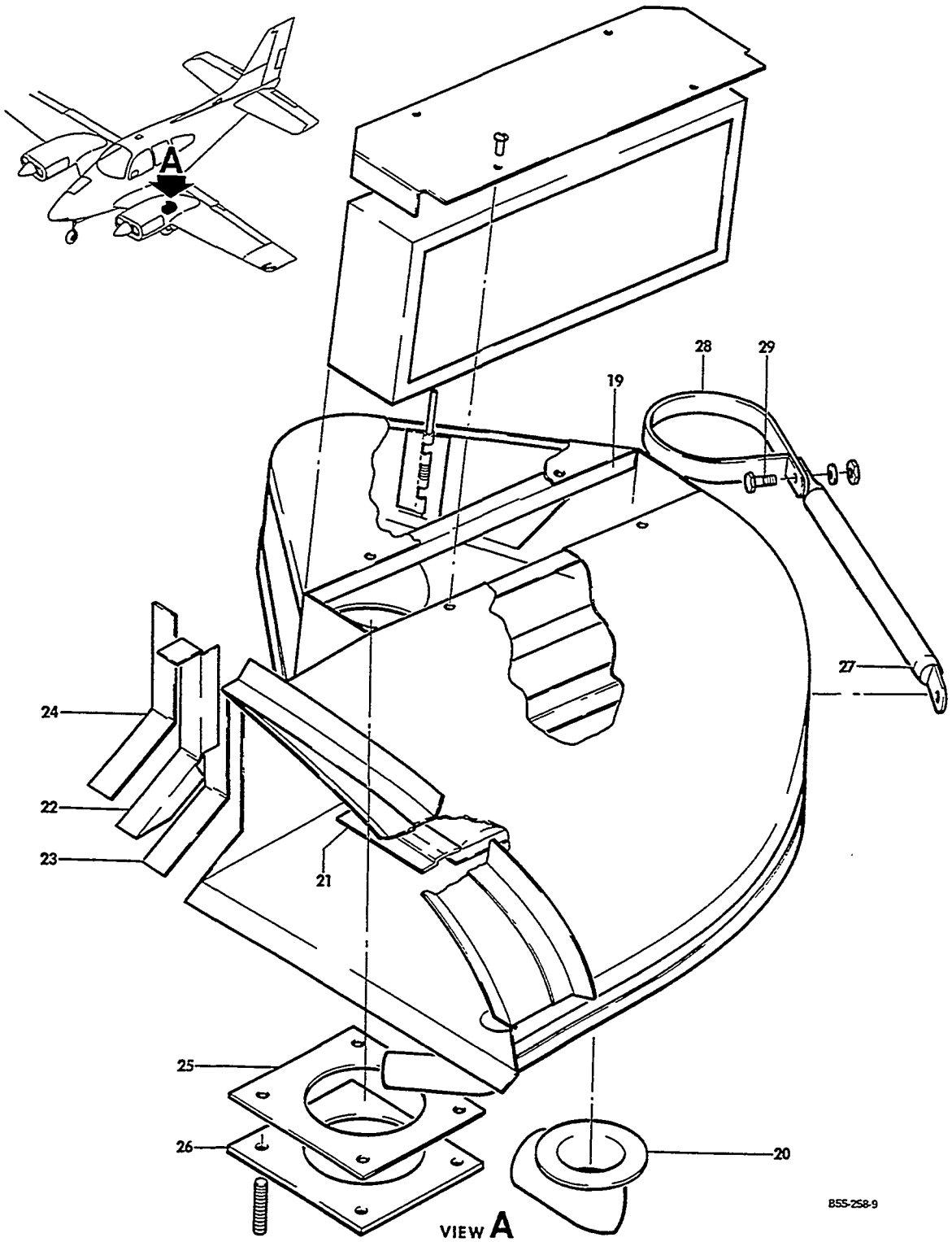

FIGURE 64-01.INDUCTION AIR SYSTEM
/SHEET 2 OF 2 SHEETS/

SUB-SECT UNIT & ITEM NO.	PART NO.	DESCRIPTION 1 2 3 4 5 6 7	UNITS PER ASSY	USABLE ON CODE
64-01	96-919100-49	. ANGLE	1	4
- 19	96-919100-93	. ANGLE	1	5
- 20	96-919100-51	. WELD ASSY,TUBE/FOR FUEL METERING UNIT/. . . .	1	1
	SS48172	. PLUG.	1	5
- 21	96-919100-89	. CLIP/WITH GEN/.	1	1
	96-919100-133	. CLIP/WITH ALT/.	1	1
- 22	96-919100-81	. ANGLE	1	1
- 23	96-919100-83	. SEAL,AIR BOX.	1	1
- 24	96-919100-85	. STRIP,AIR BOX	1	1
- 25	96-919100-39	GASKET,AIR BOX.	1	1
- 26	96-919100-163	BASE,AIR BOX.	1	1
	R 96-919112-1	SEAL,VIBRATION ISOLATOR/SEE BEECHCRAFT. . . . . SERVICE INSTRUCTION 0688-258/	1	1
	96-919113	DECAL/SEE S.I.0688/	1	1
- 27	96-919100-79	BRACE,AIR BOX	1	1
- 28	MS21919DG36	CLAMP . . . . . /ATTACHING PARTS/	1	1
- 29	AN3	BOLT.	1	
	AN960-10	WASHER.	1	
	MS20365-1032	NUT	1	

CODES OF EFFECTIVITY

1 TC-1 THRU TC-1607 2 TC-1 THRU TC-1178
3 TC-1179 THRU TC-1607 4 TC-1 THRU TC-220
5 TC-221 THRU TC-1607 6 TC-1 THRU TC-1485
7 TC-1486 THRU TC-1607

71-66-01
INDUCTION AIR SYSTEM
TE-1 THRU TE-942,EXCEPT TE-938

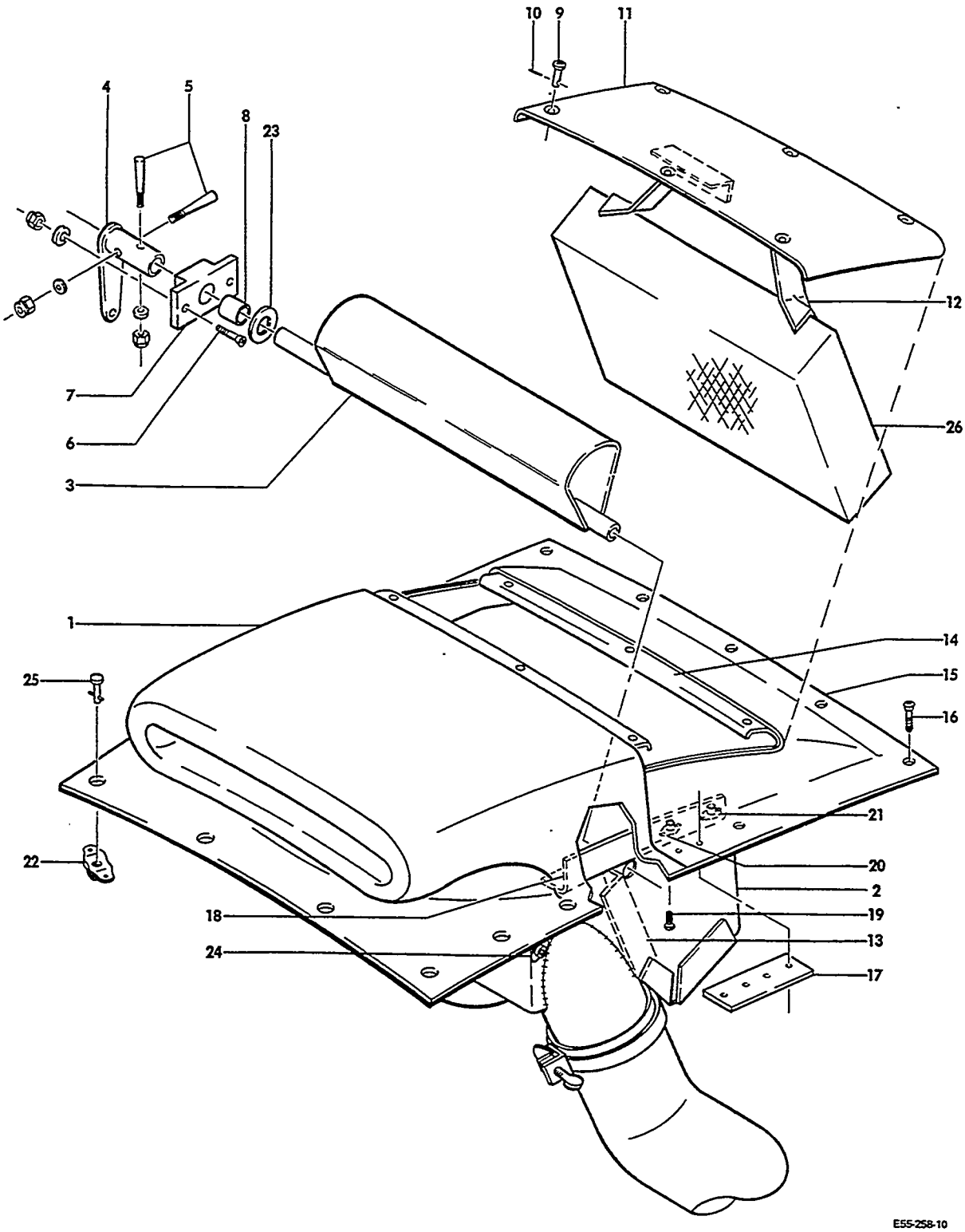

FIGURE 66-01. INDUCTION AIR SYSTEM
/SHEET 1 OF 2 SHEETS/

SUB-SECT UNIT & ITEM NO.	PART NO.	DESCRIPTION 1 2 3 4 5 6 7	UNITS PER ASSY	USABLE ON CODE
66-01	96-919101	INDUCTION SYSTEM INSTL,LH	NP	1
	96-919101-115	INDUCTION SYSTEM INSTL,RH	NP	1
	96-919101-605	. DUCT ASSY,INDUCTION AIR SYSTEM RH	1	1
	R 96-919101-606	. DUCT ASSY,INDUCTION SYSTEM LH	1	1
- 1	96-919101-607	. . DUCT ASSY,INDUCTION SYSTEM/BONDED/	1	1
- 2	96-919101-603	. . BOX ASSY,INDUCTION SYSTEM	1	1
- 3	96-919101-79	. . FLAPPER ASSY,INDUCTION SYSTEM	1	1
- 4	96-919101-13	. . ARM ASSY,FLAPPER VALVE	1	1
		/ATTACHING PARTS/		
- 5	AN386-1-6A	. . PIN,TAPERED	2	
	AN975-3	. . WASHER,LOCK	2	
	MS20364-1032	. . NUT	2	
	96-919101-87	. . BEARING ASSY,FLAPPER VALVE	2	1
		/ATTACHING PARTS/		
- 6	MS24694S53	. . SCREW /SUPERSEDES AN509-10R11/	2	
	AN960-10L	. . WASHER	2	
	MS20365-1032	. . NUT	2	
- 7	96-919101-85	. . . PLATE,BEARING	1	1
- 8	8N8D	. . . BEARING,NYLON	1	1
	96-919101-39	. . DOOR ASSY,FILTER ACCESS	1	1
		/ATTACHING PARTS/		
- 9	98264-1-090	. . STUD	6	
- 10	130177-2	. . PIN,ACCESS DOOR STUD/SUPERSEDES 99785-2/	6	
	99871P098	. . RECEPTACLE	5	
- 11	96-919101-41	. . . DOOR	1	1
	96-919101-119	. . . ANGLE	1	1
- 12	96-919101-43	. . . SPRING	1	1
- 13	96-919101-21	. . ANGLE,FILTER SUPPORT	2	1
- 14	96-919101-37	. . DOUBLER,FILTER ACCESS DOOR	1	1
- 15	96-919101-97	. . DUCT	1	1
		/ATTACHING PARTS/		
- 16	AN509-10R	. . SCREW	9	
	NAS1031A3K	. . NUTPLATE	7	
	NAS1024A3K	. . NUTPLATE	2	
	NAS463X-DD10M	. . SHIM,NUTPLATE	9	
- 17	96-919101-107	. . CLIP	2	1
- 18	96-919101-63	. . CHANNEL,LH	1	1
	96-919101-64	. . CHANNEL,RH	1	1
		/ATTACHING PARTS/		
- 19	AN520-10	. . SCREW	4	
- 20	AN366F1032	. . NUTPLATE	3	
- 21	MK2000-1032	. . NUTPLATE	1	
- 22	99947P130	. . RECEPTACLE	10	1
- 23	E05090CR032-8N	. . WASHER,FLAPPER SHAFT	2	1
- 24	AN865-1	. . FLANGE,FUEL FLOW VENT/RH ONLY/	1	1
	96-919101-81	. . COLLAR	1	1
- 25	98265-2-180	. STUD,FASTENER	8	1
	98265-2-210	. STUD,FASTENER	2	1
	295250-5	. GROMMET,STUD	10	1
	99836	. PIN,CROSS	10	1
- 26	121128-2	. FILTER,INDUCTION AIR	1	1

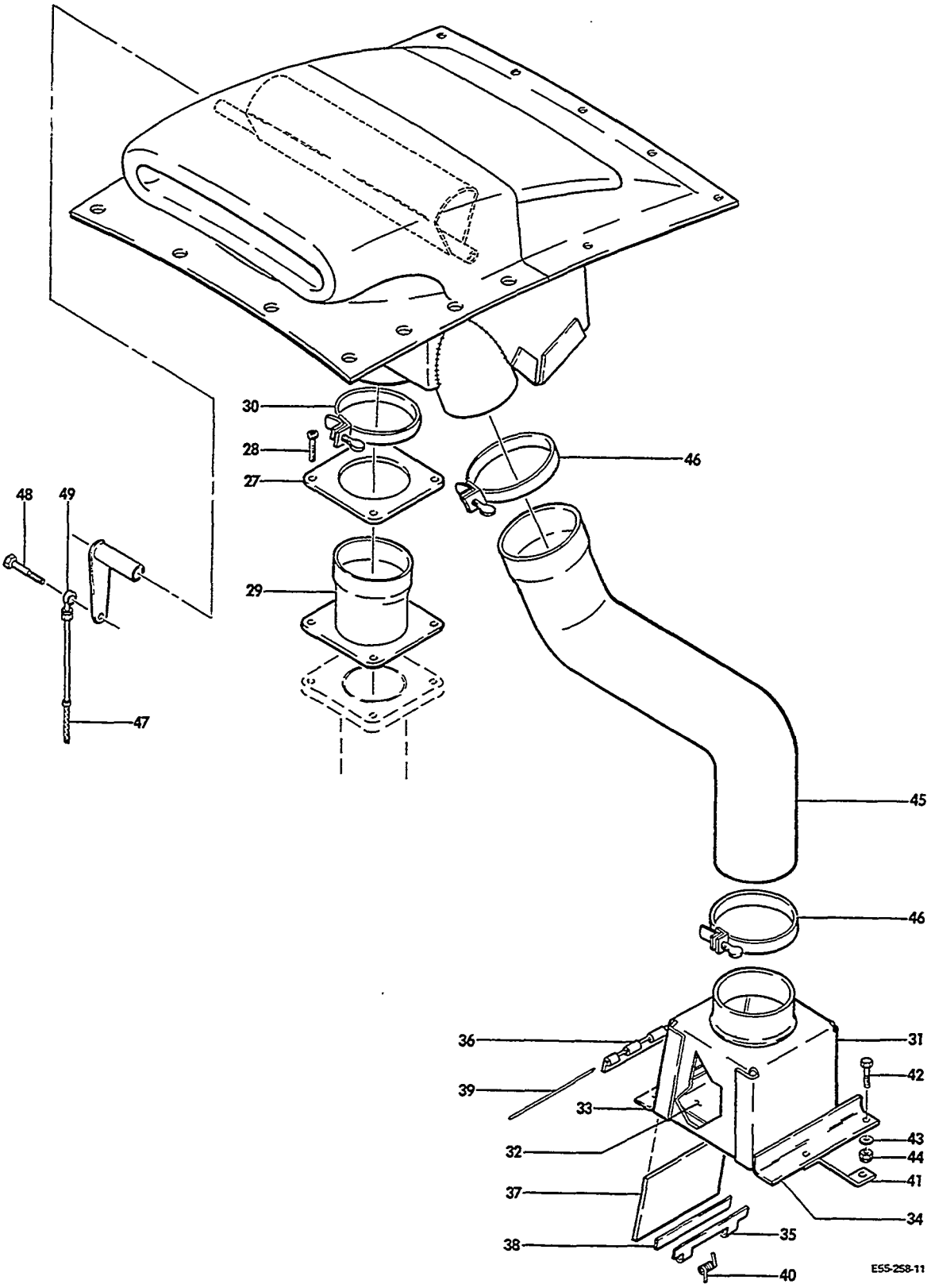

FIGURE 66-01.INDUCTION AIR SYSTEM
/SHEET 2 OF 2 SHEETS/

ATA CODE & INDEX NO.	PART NO.	DESCRIPTION 1 2 3 4 5 6 7	UNITS PER ASSY	USABLE ON CODE
66-01 - 27	96-919101-59	. PLATE,AIR SCOOP DUCT.	1	1
		/ATTACHING PARTS/		
- 28	AN500-416-6	. SCREW	4	
	AN935-416L	. WASHER.	4	
		——*——		
- 29	96-919111	. DUCT,AIR SCOOP TO MANIFOLD.	1	1
		/ATTACHING PARTS/		
- 30	105798-12	. CLAMP	1	
		——*——		
	96-910024	INDUCTION AIR INSTL,ALTERNATE	NP	1
	96-910024-31	. BOX ASSY,ALTERNATE AIR.	1	1
- 31	96-910024-602	. . WRAPPER ASSY,AIR BOX.	1	1
- 32	96-910024-45	. . BOTTOM/SUPERSEDES 96-910024-29/	1	1
- 33	96-910024-43	. . ANGLE	1	1
- 34	96-910024-41	. . ANGLE	1	1
- 35	96-910024-15	. . HINGE	1	1
- 36	96-910024-17	. . HINGE	1	1
- 37	96-910024-27	. . DOOR.	1	1
- 38	96-910024-39	. . SPACER.	1	1
- 39	105774C-ZE0226	. . PIN,HINGE	1	1
- 40	35-910288	. . SPRING,DOOR	1	1
- 41	96-910024-25	. BRACE,ALTERNATE AIR	1	1
- 42	AN3-6A/M/	. BOLT,AIR BOX & BRACE MOUNTING	4	1
- 43	AN960-10	. WASHER.	4	1
- 44	MS20365-1032	. NUT	4	1
- 45	111716AX6XX30	. DUCT,ALTERNATE AIR.	1	1
		/ATTACHING PARTS/		
- 46	AN737TW98	. CLAMP,DUCT.	2	
		——*——		
- 47	50-389012-21	CONTROL,LH AIR BOX.	1	1
	50-389012-27	CONTROL,RH AIR BOX.	1	1
		/ATTACHING PARTS/		
- 48	AN3	BOLT.	1	
	AN960-10L	WASHER.	1	
	AN310-3	NUT	1	
	MS24665-132	PIN,COTTER.	1	
		——*——		
- 49	F34-14M	ROD END	1	1
	AN935-416	WASHER,CHECK.	1	1
	AN316-4R	NUT,CHECK	1	1

CODES OF EFFECTIVITY

1 TE-1 THRU TE-942
EXCEPT TE-938

"END"

71-70-01
ENGINE DRAINS
TC-1 THRU TC-1607

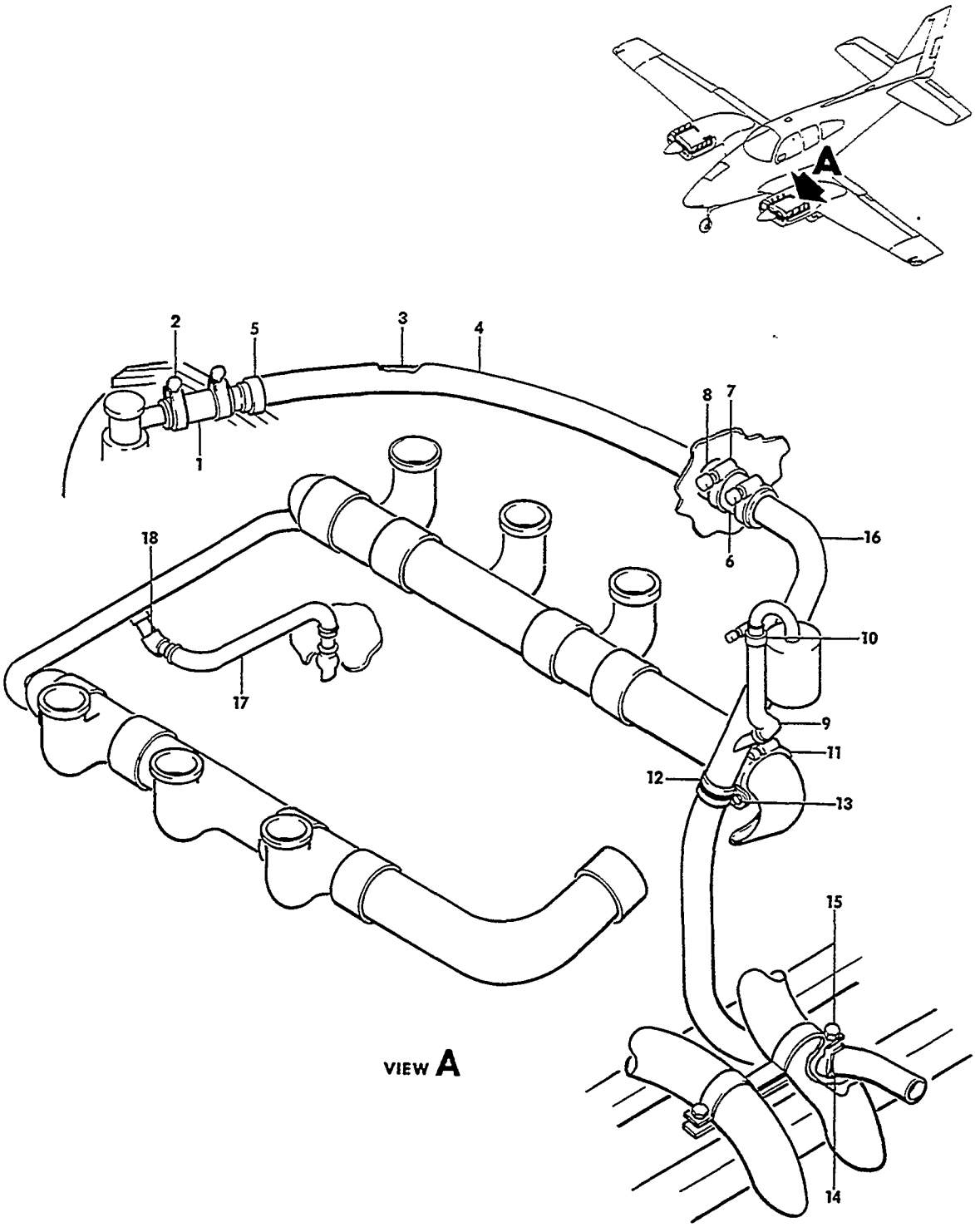

FIGURE 70-01.ENGINE DRAINS
/SHEET 1 OF 3 SHEETS/

ATA CODE & INDEX NO.	PART NO.	DESCRIPTION 1 2 3 4 5 6 7	UNITS PER ASSY	USABLE ON CODE
70-01	96-910001-601	POWER PLANT ASSEMBLY,LH	1	1
	96-910001-602	POWER PLANT ASSEMBLY,RH	1	1
		NOTE ITEMS HERE-IN SHOWN AS COMPONENT PARTS OF 96-910001-601 AND -602 PERTAIN TO DRAINS ONLY.		
	96-910045-1	BREATHER INSTL,LH ENGINE	NP	1
	96-910045-3	BREATHER INSTL,RH ENGINE	NP	1
- 1	106200H-12-11	HOSE	1	1
		/ATTACHING PARTS/		
- 2	AN737RM38	CLAMP	2	
		----*----		
- 3	96-910001-13	TUBE,ENGINE BREATHER	1	1
- 4	96-910001-45	INSULATION,TUBE	1	1
- 5	NAS397-18	CLAMP,TUBE INSULATION	2	1
- 6	106200H12-11	HOSE	1	1
		/ATTACHING PARTS/		
- 7	AN737TW34	CLAMP	2	
		----*----		
- 8	AN931-12-17	GROMMET	1	1
	106200FR8-52	HOSE,OIL SEPARATOR AIR DISCHARGE	1	3
	106200H8-42	HOSE,OIL SEPARATOR AIR DISCHARGE	1	4
- 9	106200G8-61	HOSE,OIL SEPARATOR AIR DISCHARGE	1	5
		/ATTACHING PARTS/		
- 10	AN737TW30	CLAMP	2	
		----*----		
- 11	MS21919DG36	CLAMP	1	1
- 12	MS21919DG12	CLAMP	1	1
		/ATTACHING PARTS/		
- 13	AN3-5A	BOLT	1	
	AN960-10	WASHER	1	
	MS20365-1032	NUT	1	
		----*----		
- 14	96-910001-87	CLAMP	1	1
		/ATTACHING PARTS/		
- 15	AN4-21A/M/	BOLT	1	
	100696X-ZS116	SPACER	1	
	AN960-416	WASHER	1	
	MS20365-428	NUT	1	
		----*----		
	96-910001-17	TUBE,ENGINE BREATHER	1	2
	96-910001-19	TUBE ASSY,ENGINE BREATHER	1	6
	96-910045-5	TUBE ASSY,ENGINE BREATHER/LH/	1	7
- 16	96-910045-17	TUBE ASSY,ENGINE BREATHER/LH/	1	5
	96-910045-7	TUBE ASSY,ENGINE BREATHER/RH/	1	7
	96-910045-19	TUBE ASSY,ENGINE BREATHER/RH/	1	5
	106200FR4-11	HOSE/TO DRAIN TUBE/	1	8
	106043ZB-064	HOSE/TO DRAIN TUBE/	1	9
- 17	96-910001-105	HOSE/TO DRAIN TUBE/	1	10
		/ATTACHING PARTS/		
	AN397-8	CLAMP	2	11
	A8	CLAMP	2	10
		----*----		
	96-920010-1	VALVE ASSY,MANIFOLD DRAIN	1	11
- 18	96-920010-5	VALVE ASSY,MANIFOLD DRAIN	1	10

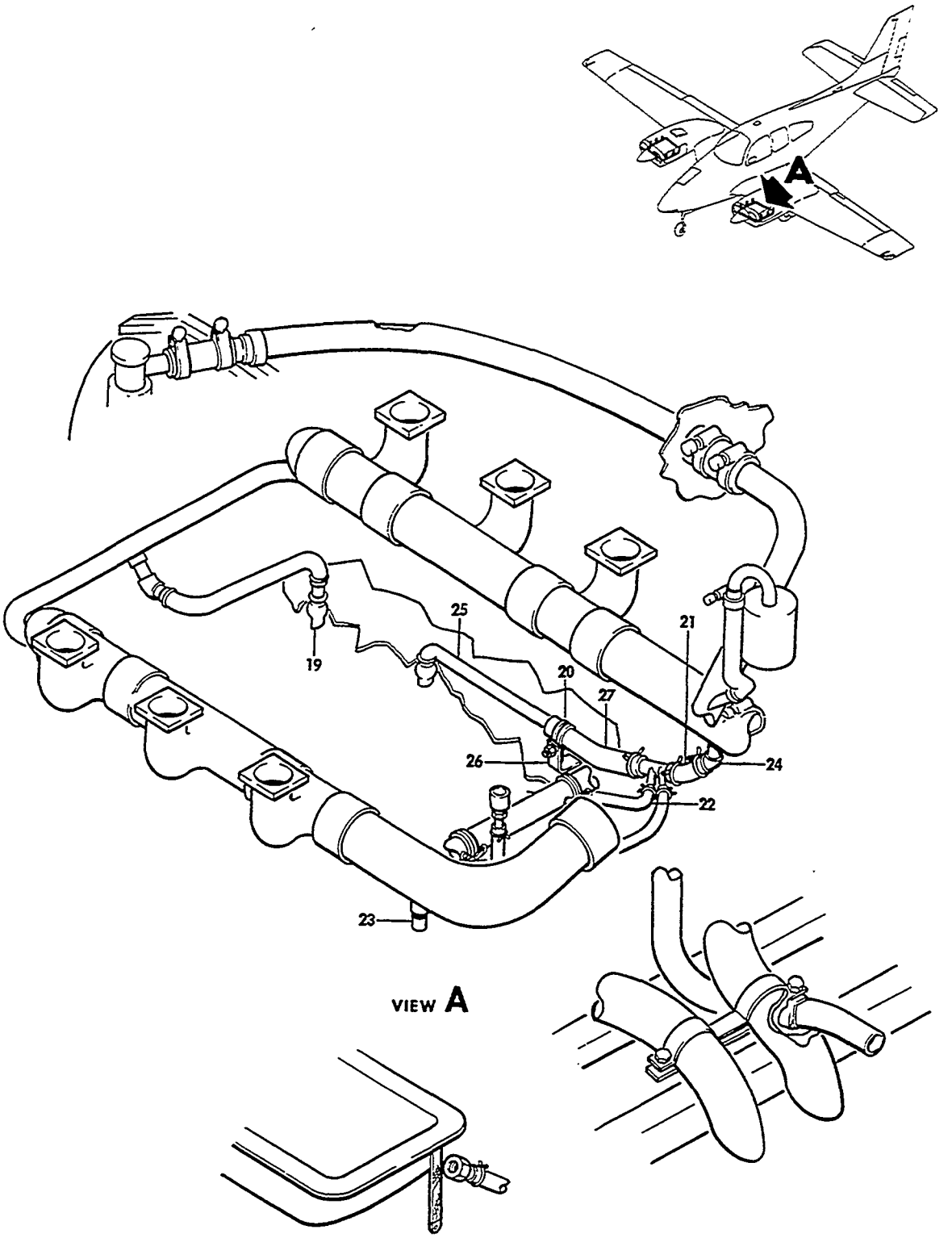

FIGURE 70-01.ENGINE DRAINS
/SHEET 2 OF 3 SHEETS/

ATA CODE & INDEX NO.	PART NO.	DESCRIPTION 1 2 3 4 5 6 7	UNITS PER ASSY	USABLE ON CODE
70-01	35-924254-5	. . BODY,DRAIN VALVE.	1	1
	35-924254-9	. . BALL,DRAIN VALVE.	1	1
	96-920010-3	. . ADAPTER,DRAIN VALVE	1	11
	96-920010-7	. . ADAPTER,DRAIN VALVE	1	10
	96-910001-47	. TUBE,MANIFOLD DRAIN	1	8
	96-910001-91	. TUBE,MANIFOLD DRAIN	1	9
- 19	96-910001-97	. TUBE,MANIFOLD DRAIN/LH/	1	10
	96-910001-98	. TUBE,MANIFOLD DRAIN/RH/	1	10
	MS35489-6	. GROMMET	1	1
- 20	MS21919DG8	. CLAMP/NOT REQUIRED PRIOR TO TC-502/ /ATTACHING PARTS/	1	10
	AN3-4	. BOLT.	1	
	AN960-10	. WASHER.	1	
	MS20365-1032	. NUT	1	
	96-910001-43	. TUBE ASSY,MANIFOLD DRAIN/LH/.	1	12
	96-910001-44	. TUBE ASSY,MANIFOLD DRAIN/RH/.	1	12
	106043ZB064	. HOSE,MANIFOLD DRAIN	2	13
- 21	96-910001-113	. HOSE,INBD MANIFOLD DRAIN/LH ENGINE/	1	10
	96-910001-119	. HOSE,INBD MANIFOLD DRAIN/RH ENGINE/ /ATTACHING PARTS/	1	10
	A8	. CLAMP	2	
- 22	96-910001-111	. HOSE,OUTBD MANIFOLD DRAIN/LH AND RH ENGINE/ /ATTACHING PARTS/	1	10
	A8	. CLAMP	2	
	AN823-4D	. MANIFOLD DRAIN FITTING/LH AND RH/	2	12
	AN840-4	. MANIFOLD DRAIN FITTING/LH AND RH/	2	13
- 23	AN915-1	. ELBOW,MANIFOLD DRAIN FITTING/LH/.	1	10
- 24	96-920010-5	. DRAIN ASSY/LH AND RH/	2	10
	96-910001-61	. NOZZLE,MANIFOLD DRAIN /ATTACHING PARTS/	2	13
	AN743-12	. BRACKET	2	
	AN742	. CLAMP	2	
	AN520-10R	. SCREW	2	
	AN960-10	. WASHER.	2	
	AN365-1032	. NUT.	2	
	AN931-4-7	. GROMMET	2	13
- 25	96-910001-95	. NOZZLE,ENGINE DRAINS.	1	10
- 26	96-910001-103	. CLIP. /ATTACHING PARTS/	1	10
	AN520-10R4	. SCREW	1	
	AN960-10	. WASHER.	1	
	MS20365-1032	. NUT	1	
- 27	96-910001-107	. HOSE,DRAIN.	1	10

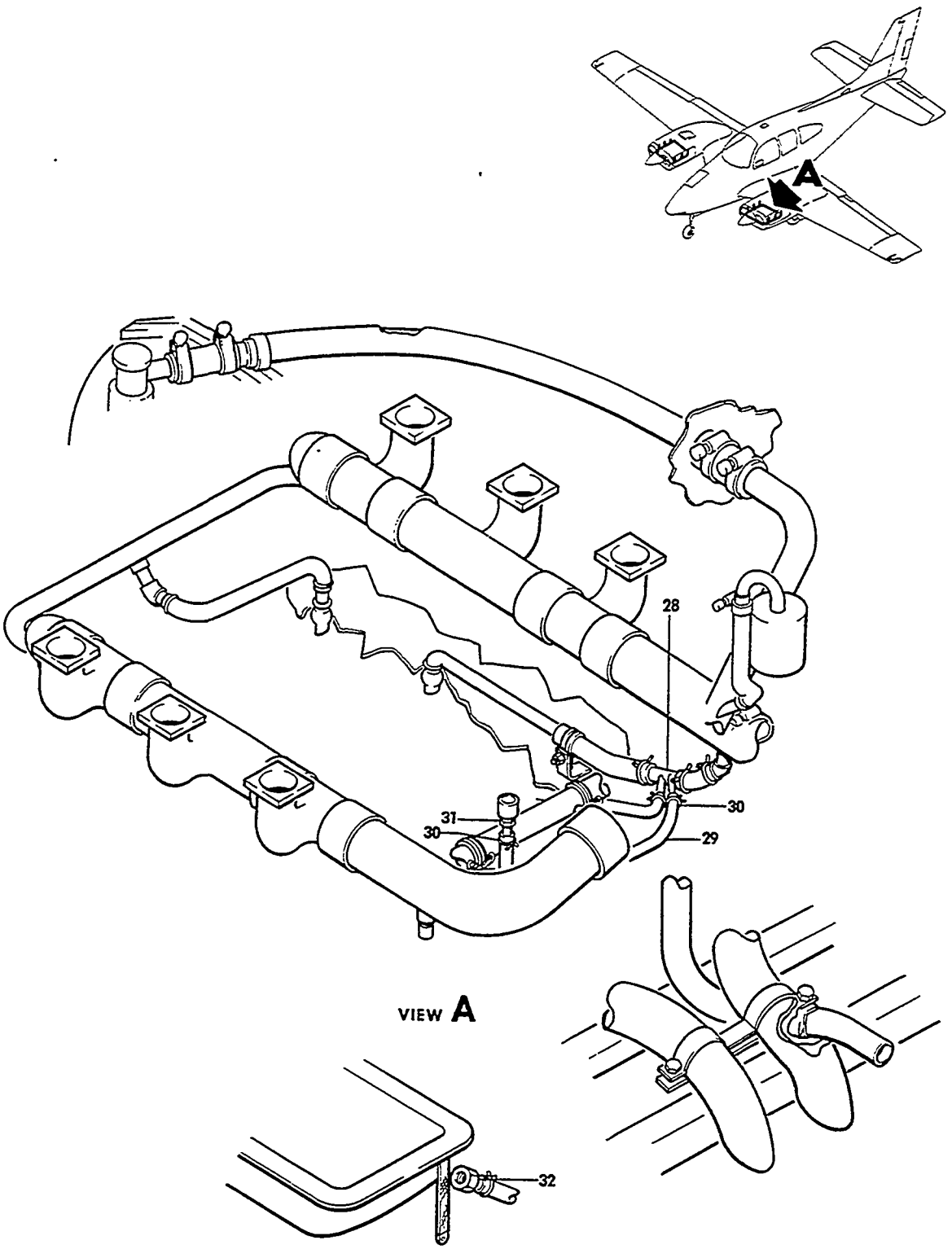

FIGURE 70-01.ENGINE DRAINS
/SHEET 3 OF 3 SHEETS/

ATA CODE & INDEX NO.	PART NO.	DESCRIPTION 1 2 3 4 5 6 7	UNITS PER ASSY	USABLE ON CODE
70-01 - 28	96-910001-93	. FITTING ASSY,DRAIN.	1	10
	96-910001-41	. TUBE,FUEL PUMP DRAIN.	1	12
	106043ZB164	. HOSE,FUEL PUMP DRAIN.	1	13
	96-910001-61	. NOZZLE,FUEL PUMP DRAIN.	1	13
		/ATTACHING PARTS/		
	AN743-12	. BRACKET	1	
		----*----		
	AN742	. CLAMP	1	13
		/ATTACHING PARTS/		
	AN520-10R	. SCREW	1	
	AN960-10	. WASHER.	1	
	AN365-1032	. NUT	1	
		----*----		
- 29	96-910001-117	. HOSE,FUEL PUMP DRAIN/LH ENGINE/	1	10
	96-910001-109	. HOSE,FUEL PUMP DRAIN/RH ENGINE/	1	10
- 30	A8	. CLAMP	1	1
	AN822-4D	. FITTING,FUEL PUMP DRAIN	1	12
- 31	AN840-4	. FITTING,FUEL PUMP DRAIN	1	14
- 32	BJ1000AH3D0	. VALVE,OIL SUMP DRAIN.	1	1

CODES OF EFFECTIVITY

1	TC-1 THRU TC-1607	2	TC-4,TC-6 THRU TC-13 TC-16 AND TC-17
3	TC-1 THRU TC-810 EXCEPT TC-4,TC-6 THRU TC-13,TC-16 TC-17 AND TC-635	4	TC-635,TC-811 THRU TC-1591
5	TC-1592 THRU TC-1607	6	TC-1 THRU TC-1429 EXCEPT TC-4,TC-6 THRU TC-13,TC-16 TC-17 AND TC-1426
7	TC-1426,TC-1430 THRU TC-1591	8	TC-1 THRU TC-156
9	TC-157 THRU TC-501	10	TC-502 THRU TC-1607
11	TC-1 THRU TC-501	12	TC-1 THRU TC-41
13	TC-42 THRU TC-501	14	TC-42 THRU TC-1607

"END"

71-72-01
ENGINE DRAINS
TE-1 THRU TE-942,EXCEPT TE-938

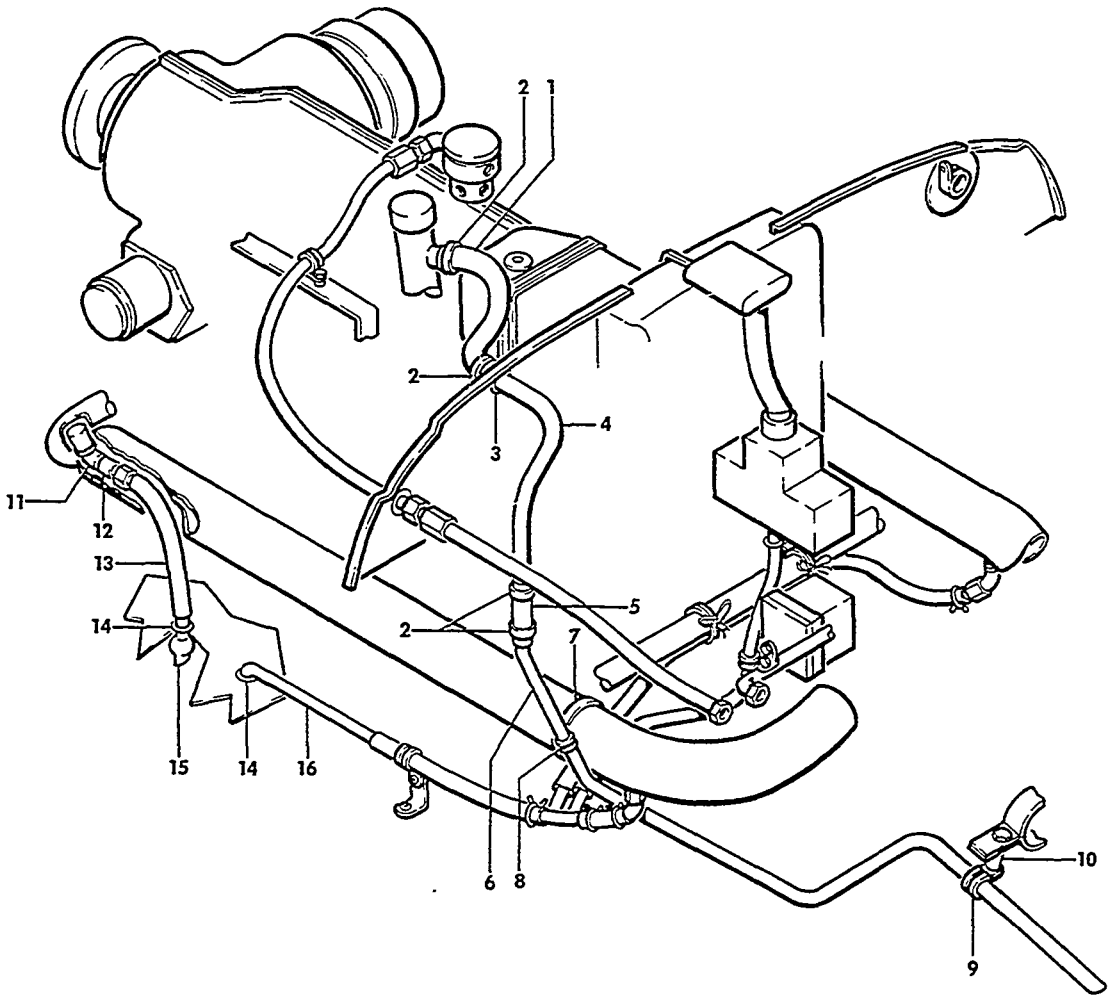

E55-241-59

FIGURE 72-01.ENGINE DRAINS
/SHEET 1 OF 2 SHEETS/

ATA CODE & INDEX NO.	PART NO.	DESCRIPTION 1 2 3 4 5 6 7	UNITS PER ASSY	USABLE ON CODE
72-01	96-910002-601	POWER PLANT ASSY,LH	1	1
	96-910002-602	POWER PLANT ASSY,RH	1	1
		NOTE THIS FIGURE INCLUDES ONLY THOSE PARTS OF THE POWER PLANT ASSEMBLIES,THAT ARE PART OF THE ENGINE DRAIN OR ENGINE BREATHER SYSTEMS.		
- 1	106200H12-32	HOSE	1	1
- 2	AN737RM38	CLAMP,HOSE	4	1
- 3	AN931-12-17	GROMMET	1	1
- 4	96-910002-19	TUBE,BREATHER	1	1
- 5	106200H12-14	HOSE,BREATHER	1	1
- 6	96-910002-45	TUBE ASSY,ENGINE CRANKCASE BREATHER	1	4
	96-910002-3	TUBE,ENGINE BREATHER/WITH PRESSURE PUMP/	1	2
	58-910018-5	TUBE,LH ENGINE BREATHER	1	3
	58-910018-7	TUBE,RH ENGINE BREATHER	1	3
- 7	MS21919DG36	CLAMP,TUBE SUPPORT	1	1
- 8	MS21919DG12	CLAMP,TUBE SUPPORT	1	1
		/ATTACHING PARTS/		
	AN520-10R	SCREW	1	
	AN960-10L	WASHER	1	
	MS20362-1032C	NUT	1	
		----*----		
- 9	96-910001-87	CLAMP,TUBE SUPPORT	1	1
		/ATTACHING PARTS/		
	AN4-21A	BOLT	1	3
- 10	100696X-ZS116	SPACER	1	3
	AN960-416	WASHER	1	3
	MS20365-428	NUT	1	3
		----*----		
- 11	AN915-1	ELBOW,MANIFOLD DRAIN	1	1
- 12	96-920010-1	VALVE ASSY,MANIFOLD DRAIN	1	1
	96-920010-3	. ADAPTER	1	1
	35-924254-9	. BALL,DRAIN VALVE	1	1
	35-924254-5	. BODY	1	1
- 13	96-910002-21	HOSE,MANIFOLD DRAIN	1	1
	A8	CLAMP,HOSE	7	1
- 14	MS35489-6	GROMMET	2	1
	96-910001-97	TUBE,LH ENGINE DRAIN	1	1
- 15	96-910001-98	TUBE,RH ENGINE DRAIN	1	1
- 16	96-910001-95	TUBE,MANIFOLD DRAIN	1	1

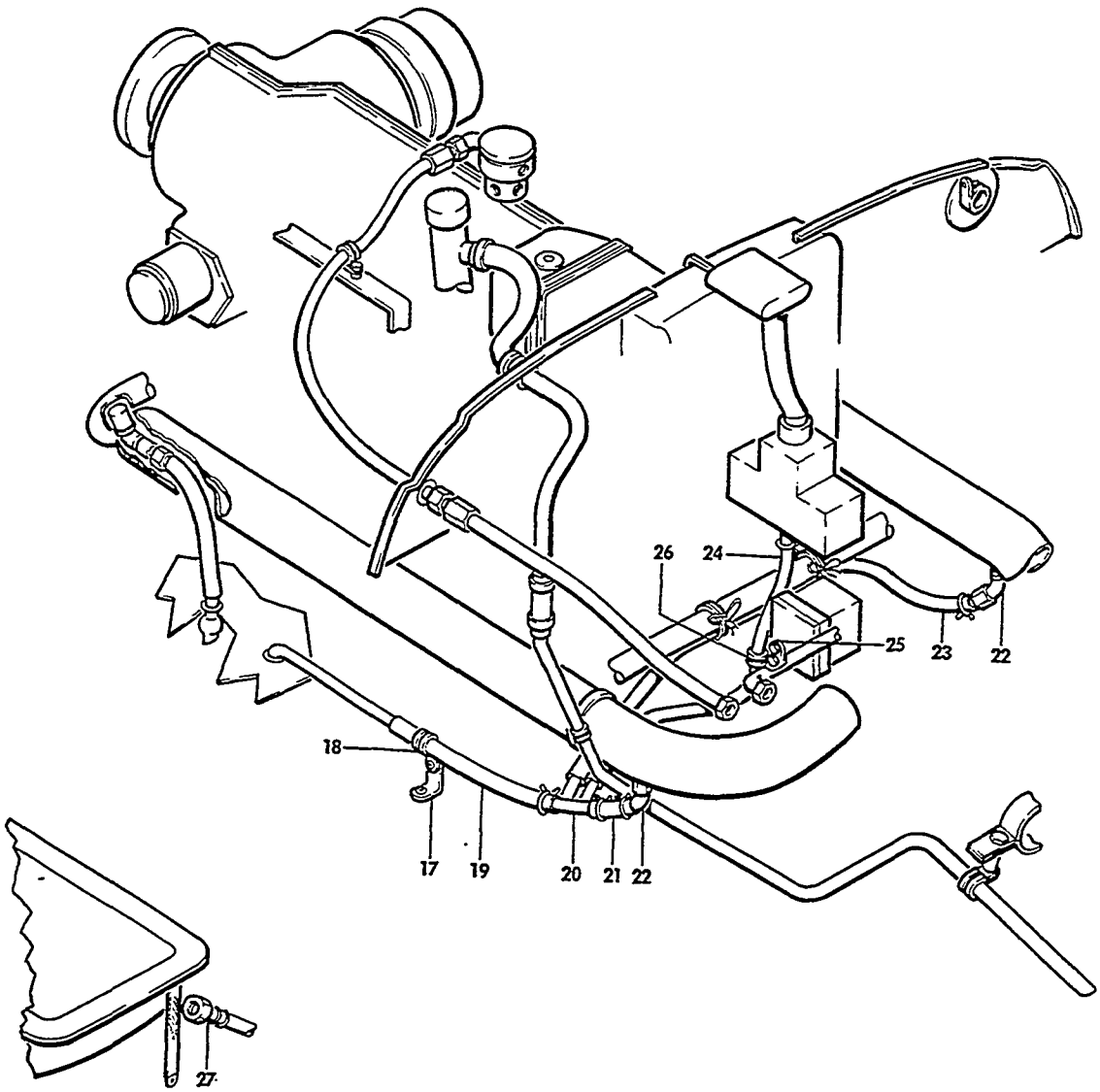

E55-241-60

FIGURE 72-01.ENGINE DRAINS
/SHEET 2 OF 2 SHEETS/

ATA CODE & INDEX NO.	PART NO.	DESCRIPTION 1 2 3 4 5 6 7	UNITS PER ASSY	USABLE ON CODE
72-01 - 17	96-910001-103	. CLIP,CLAMP SUPPORT.	1	1
		/ATTACHING PARTS/		
	AN520-10-4	. SCREW	1	
	AN960-10	. WASHER.	1	
	MS20365-1032	. NUT	1	
		----*----		
- 18	MS21919DG8	. CLAMP,TUBE SUPPORT.	1	1
		/ATTACHING PARTS/		
	AN3-4	. BOLT.	1	
	AN960-10	. WASHER.	1	
	MS20365-1032	. NUT	1	
		----*----		
- 19	96-910001-107	. HOSE,MANIFOLD DRAIN	1	1
- 20	96-910001-93	. MANIFOLD,DRAIN.	1	1
- 21	96-910001-119	. HOSE,MANIFOLD DRAIN	1	1
- 22	96-920010-5	. VALVE ASSY,MANIFOLD DRAIN	2	1
	96-920010-7	. . ADAPTER	1	1
	35-924254-9	. . BALL,NYLON.	1	1
	35-924254-5	. . BODY.	1	1
- 23	96-910002-35	. NOSE,MANIFOLD DRAIN	1	1
	96-910002-69	. HOSE,LH FUEL PUMP DRAIN	1	1
- 24	96-910002-67	. HOSE,RH FUEL PUMP DRAIN	1	1
- 25	35-944047-1	. BRACKET,HOSE CLAMP SUPPORT.	1	1
- 26	MS21919DG8	. CLAMP/SUPERSEDES AN742DG8/.	1	1
		/ATTACHING PARTS/		
	AN515-10R7	. SCREW	1	
	AN960-10	. WASHER.	1	
	MS20365-1032	. NUT	1	
		----*----		
	96-910002-55	. HOSE,OIL SEPARATOR TO ENGINE BREATHER TUBE. .	1	4
	96-910002-41	. HOSE,VACUUM SEPARATOR OIL RETURN.	1	4
	96-910002-39	. TUBE ASSY,VACUUM SEPARATOR OIL DRAIN.	1	4
		/TO ENGINE SUMP/		
	AN816-4B	. NIPPLE.	1	4
	MS21919D64	. CLAMP,VACUUM SEPARATOR OIL DRAIN TUBE	1	4
		/ATTACHING PARTS/		
	AN520-10	. SCREW	1	
	MS20365-1032	. NUT	1	
		----*----		
	96-910002-43	. BRACKET	1	4
- 27	BJ1000AH3D0	. VALVE ASSY,OIL SUMP DRAIN	1	1
	1022A1	. . SEAL,OIL DRAIN VALVE.	1	1

CODES OF EFFECTIVITY

1 TE-1 THRU TE-942 EXCEPT TE-938
2 TE-452 THRU TE-855
3 TE-856 THRU TE-942 EXCEPT TE-938
4 TE-1 THRU TE-451

"END"

CHAPTER

72

ENGINES

LIST OF PAGES & TABLE OF CONTENTS
FOR
CHAPTER 72-00-00 ENGINE

CHAP/SUB-SECT & UNIT	PAGE NO.	EFFECTIVE DATE	TABLE OF CONTENTS
72-00-00	1	04/05/85.	LIST OF PAGES & TABLE OF CONTENTS . . . . .
72-00-01	1	04/05/85.	ENGINE/REFERENCE/ . . . . .

72-00-01
ENGINE/REFERENCE/
FOR ENGINE BREAKDOWN ON AIRCRAFT TE-1 THRU TE-942 & TC-350 REFER TO CONTINENTAL MOTORS CORP. IO-520 ENGINE SERIES PARTS CATALOG.
FOR AIRCRAFT TC-1 THRU TC-1607 EXCEPT TC-350, REFER TO CONTINENTAL MOTORS CORP. IO-470 ENGINE SERIES PARTS CATALOG.

"END"

CHAPTER

73

ENGINE FUEL AND CONTROL

LIST OF PAGES & TABLE OF CONTENTS
FOR
CHAPTER 73-00-00 ENGINE FUEL SYSTEMS

CHAP/SUB-SECT & UNIT	PAGE NO.	EFFECTIVE DATE	TABLE OF CONTENTS
73-00-00	1	04/30/84	LIST OF PAGES & TABLE OF CONTENTS
73-10-01	1	03/10/78	ENGINE FUEL PLUMBING
73-10-01	2	03/10/78	TC-1 THRU TC-1607
73-10-01	3	03/10/78	
73-12-01	1	03/10/78	ENGINE FUEL PLUMBING
73-12-01	2	03/10/78	TE-1 THRU TE-942 EXCEPT TE-938
73-12-01	3	03/10/78	

73-10-01
ENGINE FUEL PLUMBING
TC-1 THRU TC-1607

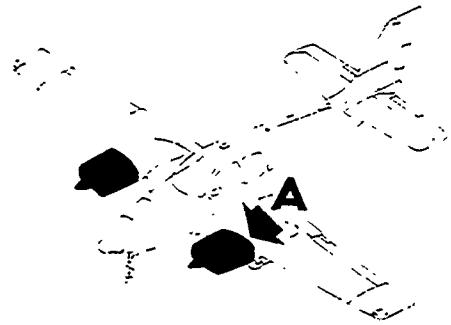

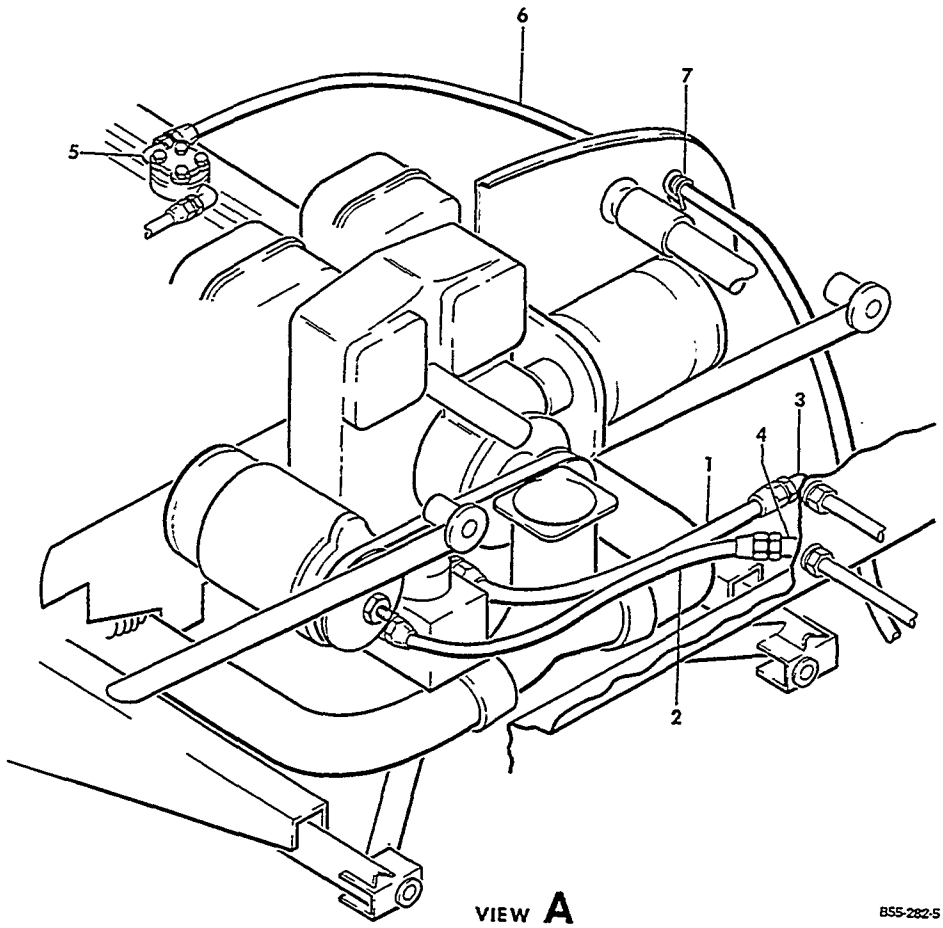

FIGURE 10-01.ENGINE FUEL PLUMBING

ATA CODE & INDEX NO.	PART NO.	DESCRIPTION 1 2 3 4 5 6 7	UNITS PER ASSY	USABLE ON CODE
10-01	96-920001	FUEL SYSTEM INSTALLATION/112 GAL/STD/	NP	1
	96-920001-155	FUEL SYSTEM INSTALLATION/140 GAL/OPT/	NP	2
	96-920001-275	FUEL SYSTEM INSTALLATION/112 GAL/STD/	NP	3
		/SUPERSEDES 96-920001-231/		
	96-920001-233	FUEL SYSTEM INSTALLATION/142 GAL/OPT/	NP	3
	96-920001-283	FUEL SYSTEM INSTALLATION/106 GAL/STD/	NP	4
	96-920001-285	FUEL SYSTEM INSTALLATION/136 GAL/OPT/	NP	4
	MS28741-4-0250	. HOSE ASSY,FUEL RETURN/LH/	1	5
	MS28741-4-0234	. HOSE ASSY,FUEL RETURN/RH/	1	5
- 1	MS28741-4-0222	. HOSE ASSY,FUEL RETURN/LH AND RH/	1	6
	MS28741-6-0230	. HOSE ASSY,FUEL PUMP SUPPLY/LH/	1	5
	MS28741-6-0140	. HOSE ASSY,FUEL PUMP SUPPLY/RH/	1	5
	MS28741-6-0184	. HOSE ASSY,FUEL PUMP SUPPLY/LH AND RH/	1	7
- 2	MS28714-8-0184	. HOSE ASSY,FUEL PUMP SUPPLY/LH AND RH/	1	8
- 3	AN837-4	. FITTING/LH AND RH/	1	9
	AN960-716	. WASHER	2	9
	AN924-4	. NUT	1	9
	AN833-6	. FITTING/LH/	1	10
	AN960-916	. WASHER	2	10
	AN924-6	. NUT	1	10
- 4	AN837-8	. FITTING/LH/	1	8
	AN960-1216L	. WASHER	2	8
	AN924-8	. NUT	1	8
	AN837-6	. ELBOW/RH/	1	10
	AN960-916	. WASHER	2	10
	AN924-6	. NUT	1	10
	AN833-8	. ELBOW/RH/	1	8
	AN960-1216L	. WASHER	2	8
	AN924-8	. NUT	1	8
- 5	96-920014	. RESTRICTOR ASSY,FUEL/LH AND RH/	1	9
	MS28741-4-0200	. HOSE ASSY/RESTRICTOR TO BAFFLE/LH AND RH/	1	11
	NAS43DD3-32	. SPACER/RH/	1	9
	AN837-4	. FITTING,BAFFLE/LH AND RH/	1	11
	AN924-4	. NUT	1	11
	MS28741-4-0152	. HOSE ASSY/BAFFLE TO FIREWALL/LH/	1	11
	MS28741-4-0156	. HOSE ASSY/BAFFLE TO FIREWALL/RH/	1	11
- 6	MS28741-4-0376	. HOSE ASSY/RESTRICTOR TO FIREWALL/LH AND RH/	1	12
	MS35489-16	. GROMMET/AT BAFFLE/LH AND RH/	1	12
- 7	MS21919DG8	. CLAMP	1	12
		/ATTACHING PARTS/		
	AN743-12	. CLIP	1	
	AN520-10R	. CLIP	2	
	AN960-10L	. WASHER	2	
	MS20365-1032	. NUT	1	

CODES OF EFFECTIVITY

1	TC-1 THRU TC-190	2	TC-191 THRU TC-420 EXCEPT TC-251,TC-350
3	TC-251,TC-421 THRU TC-954	4	TC-350,TC-955 THRU TC-1607
5	TC-1 THRU TC-420 EXCEPT TC-251	6	TC-251,TC-421 THRU TC-1607 EXCEPT TC-350
7	TC-251,TC-421 THRU TC-954 EXCEPT TC-350	8	TC-350,TC-955 THRU TC-1607
9	TC-1 THRU TC-1607	10	TC-1 THRU TC-954 EXCEPT TC-350
11	TC-1 THRU TC-1385	12	TC-1386 THRU TC-1607

"END"

73-12-01
ENGINE FUEL PLUMBING
TE-1 THRU TE-942 EXCEPT TE-938

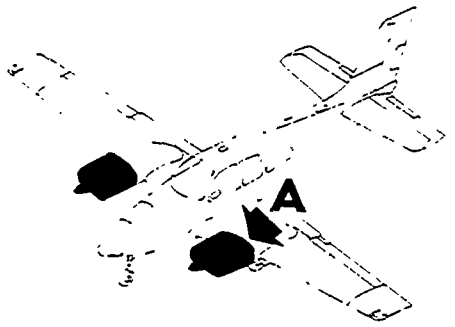

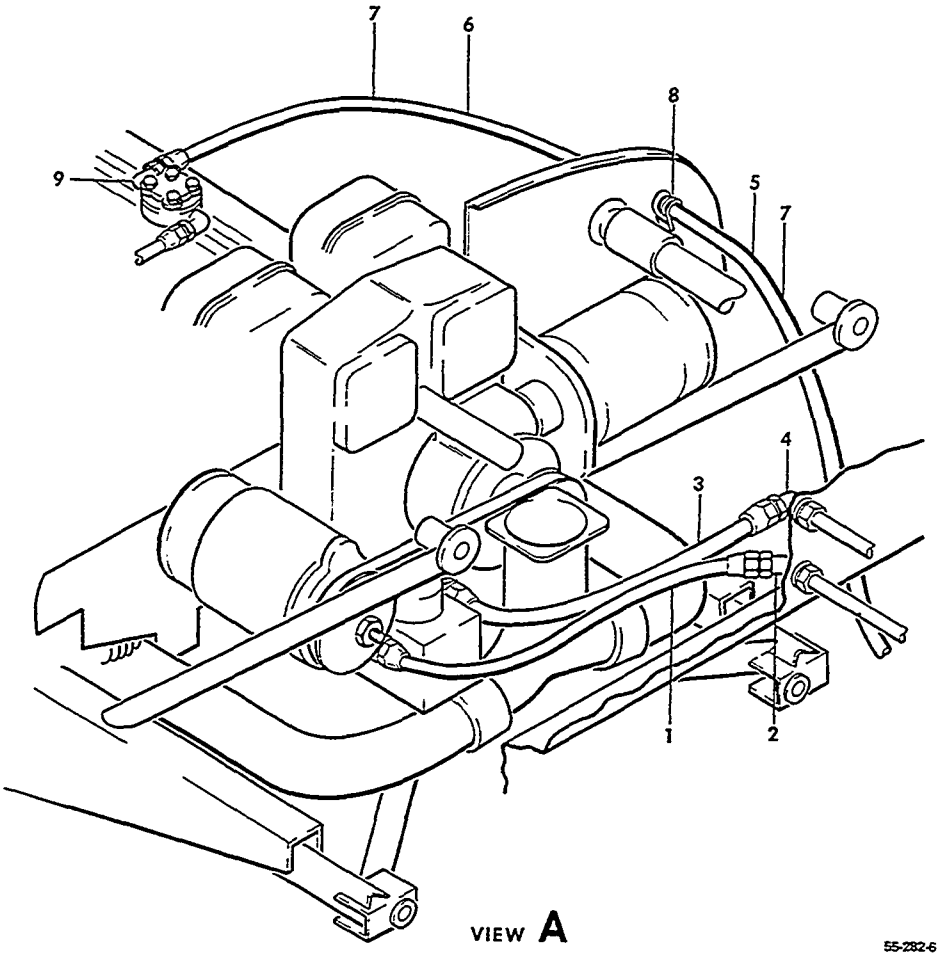

FIGURE 12-01. ENGINE FUEL PLUMBING

ATA CODE & INDEX NO.	PART NO.	DESCRIPTION 1 2 3 4 5 6 7	UNITS PER ASSY	USABLE ON CODE
12-01	96-920001-265	FUEL SYSTEM INSTALLATION/112 GALLON/.	NP	1
	96-920001-267	FUEL SYSTEM INSTALLATION/142 GALLON/.	NP	1
	330995-8-0090	. HOSE ASSY,FUEL SUPPLY	2	3
		/SUPERSEDES 156001-8D-01001/		
- 1	58-920035-1	. HOSE ASSY,FUEL SUPPLY	2	2
		/ATTACHING PARTS/		
- 2	AN837-8	. ELBOW	2	
	AN960-1216L	. WASHER.	2	
	AN924-8	. NUT	2	
		——+——		
- 3	MS28741-4-0160	. HOSE ASSY,FUEL RETURN LH.	1	1
	MS28741-4-0250	. HOSE ASSY,FUEL RETURN RH.	1	1
		/ATTACHING PARTS/		
- 4	AN833-4	. ELBOW	2	
	AN960-716	. WASHER.	2	
	AN924-4	. NUT	2	
		——+——		
- 5	MS28741-4-0154	. HOSE ASSY,FUEL PRESSURE LH.	1	5
	MS28741-4-0170	. HOSE ASSY,FUEL PRESSURE RH.	1	5
- 6	MS28741-4-0220	. HOSE ASSY,FUEL PRESSURE	2	5
- 7	MS28741-4-0396	. HOSE ASSY,FUEL PRESSURE LH.	1	4
	MS28741-4-0410	. HOSE ASSY,FUEL PRESSURE RH.	1	4
		/ATTACHING PARTS/		
	AN832-4	. UNION,LH FIREWALL	1	
	AN837-4	. ELBOW,RH FIREWALL	1	
	AN924-4	. NUT,RH FIREWALL	1	
	AN832-4D	. UNION,ENGINE BAFFLE	2	5
	AN960-716L	. WASHER,ENGINE BAFFLE.	4	5
	AN924-4D	. NUT	2	5
		——+——		
- 8	MS21919-DG8	. CLAMP,PRESSURE HOSE SUPPORT	2	4
	AN743-12	. CLIP,CLAMP TO BAFFLE.	2	4
		/ATTACHING PARTS/		
	AN520-10R	. SCREW	4	4
	AN960-10L	. WASHER.	4	4
	MS20365-1032	. NUT	4	
		——+——		
	MS35489-16	. GROMMET,ENGINE BAFFLE	2	4
	MS21919-DG8	. CLAMP,FUEL PRESSURE HOSE/TO ENGINE BRACKET/ .	4	1
		/ATTACHING PARTS/		
	NAS43DD-3-44	. SPACER/1 LH 2 RH/	3	
	AN520-10	. SCREW	4	
	AN365-1032	. NUT	4	
		——+——		
- 9	96-920014	. RESTRICTOR,LH DIST VALVE/ENGINE FURNISHED RH/	1	1

CODES OF EFFECTIVITY

1 TE-1 THRU TE-942 EXCEPT TE-938

2 TE-875,TE-876, TE-880,TE-882 TE-886 THRU TE-942 EXCEPT TE-938

3 TE-1 THRU TE-885 EXCEPT TE-875, TE-876,TE-880 AND TE-882

4 TE-839 THRU TE-942 EXCEPT TE-938

5 TE-1 THRU TE-838

"END"

CHAPTER

76

ENGINE CONTROLS

LIST OF PAGES & TABLE OF CONTENTS
FOR
CHAPTER 76-00-00 ENGINE CONTROLS

CHAP/SUB-SECT & UNIT	PAGE NO.	EFFECTIVE DATE	TABLE OF CONTENTS
76-00-00	1	04/05/85	LIST OF PAGES & TABLE OF CONTENTS
76-10-01	1	03/10/78	ENGINE CONTROLS
76-10-01	2	03/10/78	TC-1 THRU TC-1607
76-10-01	3	04/05/85	
76-10-01	4	03/10/78	
76-10-01	5	03/10/78	
76-10-01	6	03/10/78	
76-10-01	7	03/10/78	
76-12-01	1	03/10/78	ENGINE CONTROLS
76-12-01	2	03/10/78	TE-1 THRU TE-942 EXCEPT TE-938
76-12-01	3	03/10/78	
76-12-01	4	03/10/78	
76-12-01	5	03/10/78	
76-12-01	6	03/10/78	
76-12-01	7	03/10/78	
76-15-01	1	03/10/78	CONSOLE ENGINE CONTROLS
76-15-01	2	03/10/78	TC-1 THRU TC-1607
76-15-01	3	04/05/85	
76-15-01	4	03/10/78	
76-15-01	5	03/10/78	
76-15-01	6	03/10/78	
76-15-01	7	03/10/78	
76-16-01	1	03/10/78	CONSOLE ENGINE CONTROLS AND THROTTLE WARNING
76-16-01	2	03/10/78	TE-1 THRU TE-942 EXCEPT TE-938
76-16-01	3	03/10/78	
76-16-01	4	03/10/78	
76-16-01	5	03/10/78	
76-16-01	6	03/10/78	
76-16-01	7	04/05/85	

76-10-01
ENGINE CONTROLS
TC-1 THRU TC-1607

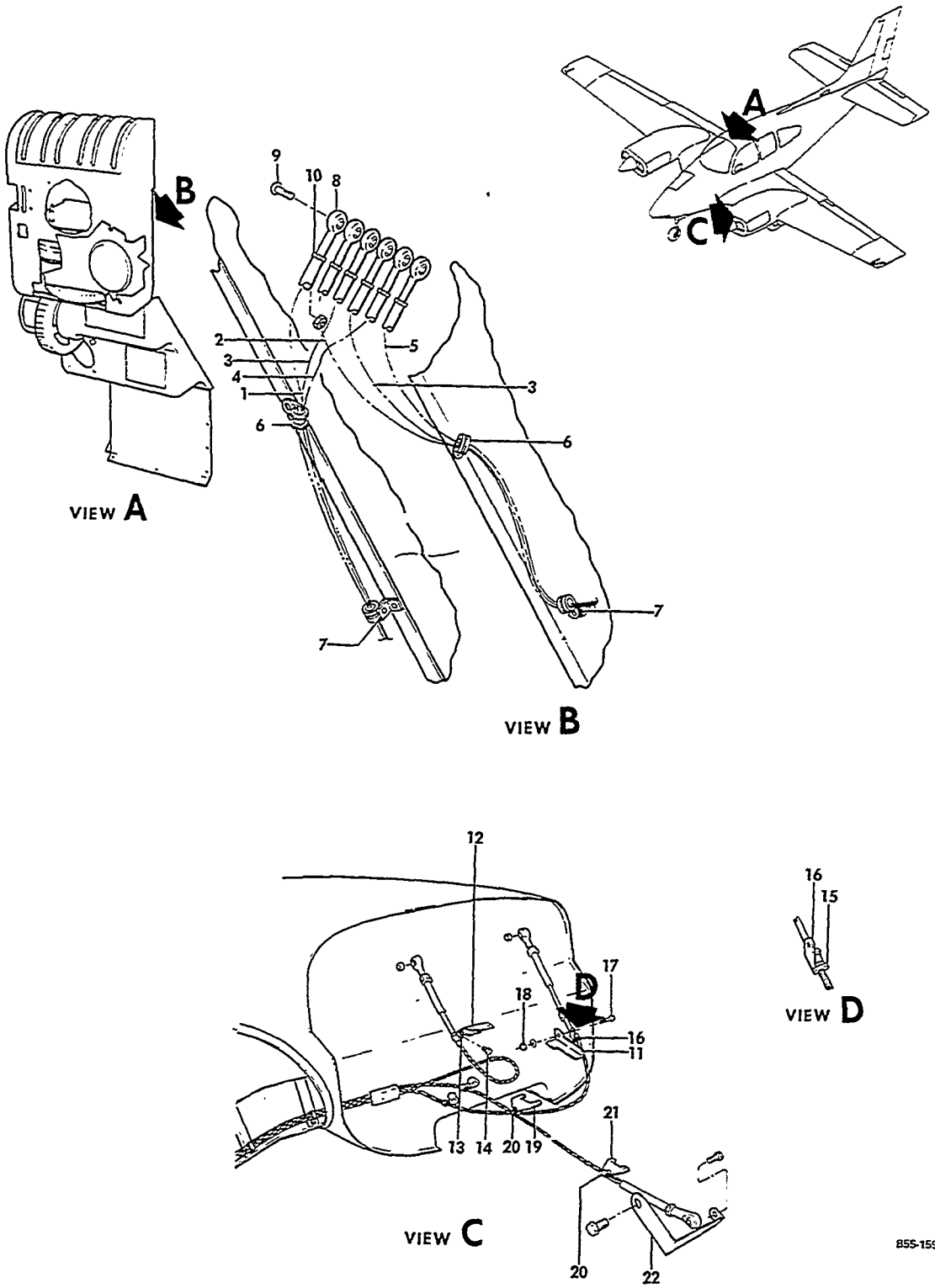

FIGURE 10-01.ENGINE CONTROLS
/SHEET 1 OF 3 SHEETS/

SUB-SECT UNIT & ITEM NO.	PART NO.	DESCRIPTION 1 2 3 4 5 6 7	UNITS PER ASSY	USABLE ON CODE
10-01	96-940000	CONTROLS INSTL,ENGINE	NP	1
- 1	R 50-389010-29	. CONTROL ASSY,PROP LH/SPARES FOR 50-389010-13/	1	2
	R 8112-6	. CONTROL ASSY,PROP LH/ORDER 50-389010-29/. . .	1	3
- 2	R 50-389010-27	. CONTROL ASSY,PROP/RH/SPARES FOR 50-389010-7/.	1	2
	R 8112-2	. CONTROL ASSY,PROP RH/ORDER 50-389010-27/. . .	1	3
- 3	R 50-389012-15	. CONTROL ASSY,THROTTLE/LH AND RH/SPARES. . . . FOR 50-389012-11/	1	2
	R 8113-2	. CONTROL ASSY,THROTTLE/LH AND RH/. . . . . ORDER 50-389012-15	1	3
- 4	R 50-389010-19	. CONTROL ASSY,MIXTURE/LH/SPARES FOR -15/ . . .	1	2
	R 8112-5	. CONTROL ASSY,MIXTURE/LH/ORDER 50-389010-19/ .	1	3
- 5	R 50-389010-21	. CONTROL ASSY,MIXTURE/RH/SPARES FOR -17/ . . .	1	2
	R 8112-1	. CONTROL ASSY,MIXTURE/RH/ORDER 50-389010-21/ .	1	3
- 6	MS21919DG10	. CLAMP . . . . . /ATTACHING PARTS/	1	1
- 7	AN743	. BRACKET	1	
	AN3A	. BOLT.	2	
	AN960-10	. WASHER.	1	
	MS20365-1032	. NUT	2	
		----*----		
- 8	F34-14M	. END,ROD/ENGINE CONTROLS TO CONSOLE/ . . . . . /SUPERSEDES REB-3N/ /ATTACHING PARTS/	1	1
- 9	AN23-15A	. BOLT.	1	
	AN960-10	. WASHER.	1	
	AN364-1032	. NUT	1	
		----*----		
- 10	AN316-4R	. NUT	1	1
	AN935-416	. WASHER,LOCK	1	1
	96-940000-69	. BRACKET,MIXTURE CONTROL	1	4
- 11	96-940000-73	. BRACKET,MIXTURE CONTROL	1	5
	96-940010	. BRACKET,THROTTLE CONTROL.	1	6
- 12	96-940021	. BRACKET,THROTTLE CONTROL.	1	7
- 13	RA1039C	. CLIP,THROTTLE CONTROL . . . . . /ATTACHING PARTS/	1	1
- 14	AN4-5A	. BOLT.	1	
	AN365-428	. NUT	1	
		----*----		
- 15	S241	. BUSHING,MIXTURE CONTROL . . . . . /ATTACHING PARTS/	2	1
- 16	AN741-4P	. CLAMP,MIXTURE CONTROL	1	
- 17	AN3	. BOLT.	1	
	AN960-10	. WASHER.	1	
- 18	AN365-1032	. NUT	1	
		----*----		
- 19	96-940000-5	. BRACKET	1	6
- 20	AN742-6	. CLAMP,PROP CONTROL. . . . . /ATTACHING PARTS/	1	1
	AN515-10R	. SCREW	1	
	100696X-ZG008	. SPACER.	1	
	AN960-10	. WASHER.	1	
	AN365-1032	. NUT	1	
		----*----		
- 21	96-940000-75	. BRACKET,PROP CONTROL.	1	1
- 22	35-944051-13	. ARM ASSY,PROP CONTROL GOVERNOR. . . . . /SUPERSEDES 35-944051-1 ARM ASSY/ /ATTACHING PARTS/	1	1
	AN3-6A	. BOLT.	1	
	AN936A10	. WASHER.	1	
	AN960-10L	. WASHER.	1	
	AN365-1032C	. NUT	1	
		----*----		

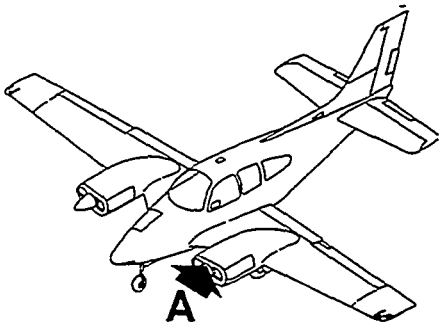

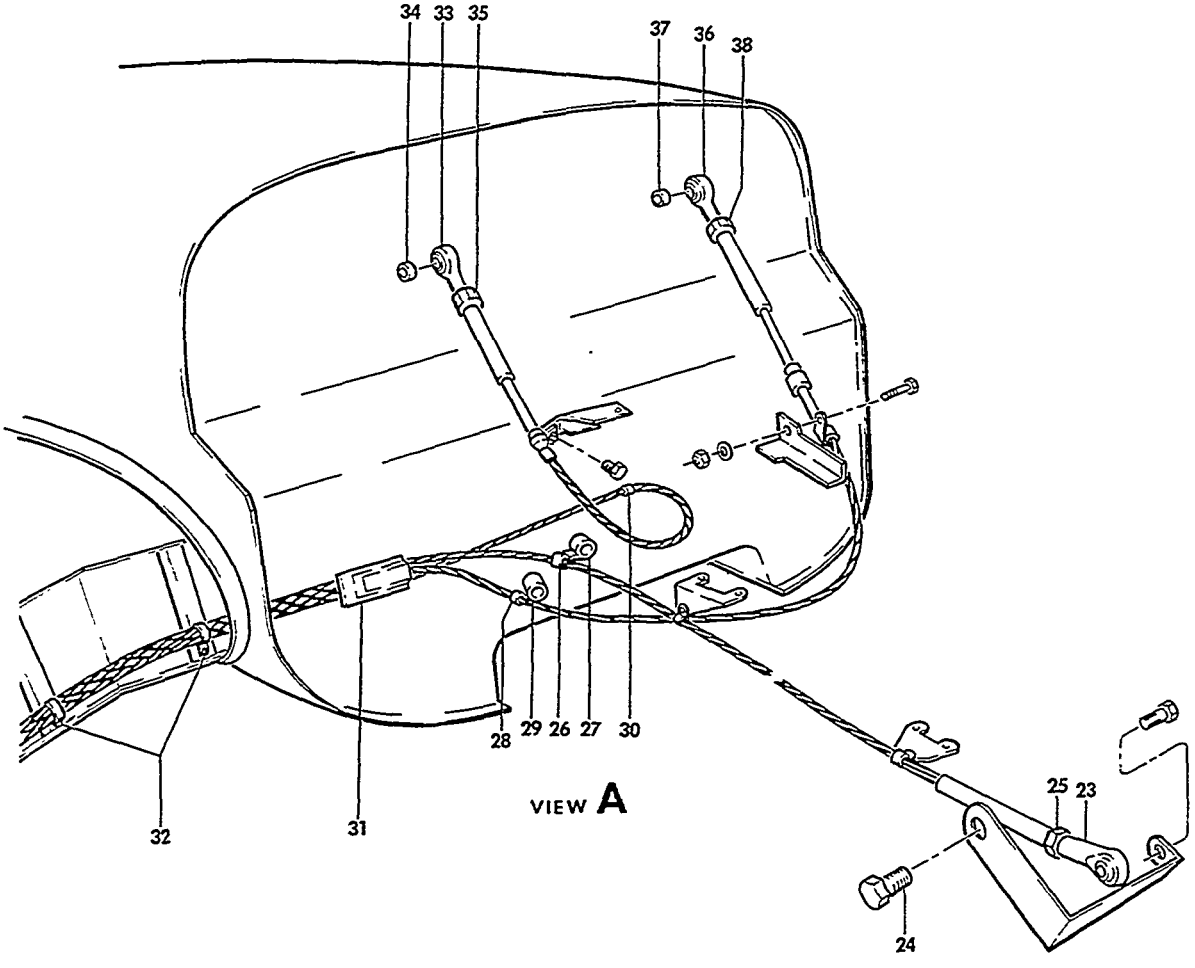

BSS-159-17

FIGURE 10-01.ENGINE CONTROLS
/SHEET 2 OF 3 SHEETS/

ATA CODE & INDEX NO.	PART NO.	DESCRIPTION 1 2 3 4 5 6 7	UNITS PER ASSY	USABLE ON CODE
10-01 - 23	F34-14M	END,PROP CONTROL ROD.	1	1
		/ATTACHING PARTS/		
- 24	AN3	BOLT.	1	
	AN960-10L	WASHER.	1	
	AN310-3	NUT	1	
	AN380-2-2	PIN,COTTER.	1	
- 25	AN316-4R	NUT	1	1
	AN935-416	WASHER,LOCK	1	1
- 26	MS21919DG6	CLAMP,PROP CONTROL/2 LH 1 RH/	1	1
- 27	MS21919DG8	CLAMP,PROP CONTROL SUPPORT/2 LH 1 RH/	1	1
		/ATTACHING PARTS/		
	AN3A	BOLT.	1	
	AN960-10	WASHER.	1	
	MS20365-1032	NUT	1	
- 28	MS21919DG6	CLAMP/2 LH 1 RH/.	1	
- 29	MS21919DG12	CLAMP,MIXTURE CONTROL/LH/	2	1
	MS21919DG16	CLAMP,MIXTURE CONTROL/RH/	1	1
		/ATTACHING PARTS/		
	AN3A	BOLT.	1	
	AN960-10	WASHER.	1	
	MS20365-1032	NUT	1	
- 30	MS21919DG6	CLAMP,THROTTLE CONTROL/RH/.	1	1
		/ATTACHING PARTS/		
	AN3A	BOLT.	1	
	AN960-10	WASHER.	1	
	MS20365-1032	NUT	1	
- 31	96-940000-9	COVER,FIREWALL ENGINE CONTROL/LH/	1	1
	96-940000-10	COVER,FIREWALL ENGINE CONTROL/RH/	1	1
		/ATTACHING PARTS/		
	AN525-1032R	SCREW	4	
	NAS1031A3K	NUTPLATE.	4	
- 32	AN742D10	CLAMP,ENGINE CONTROLS	1	1
		/ATTACHING PARTS/		
	AN3A	BOLT.	1	
	AN960-10	WASHER.	1	
	MS20365-1032	NUT	1	
- 33	F34-14M	END,THROTTLE CONTROL ROD.	1	1
		/ATTACHING PARTS/		
	AN3	BOLT.	1	
	AN960-10	WASHER.	1	
	AN310-3	NUT	1	
	AN380-2-2	PIN,COTTER.	1	
- 34	10096X-ZM016	BUSHING	1	
- 35	AN316-4R	NUT	1	1
	AN935-416	WASHER,LOCK	1	1
- 36	F34-14M	END,MIXTURE CONTROL ROD	1	1
		/ATTACHING PARTS/		
	AN3	BOLT.	1	
	AN960-10	WASHER.	1	
	AN310-3	NUT	1	
	AN380-2-2	PIN,COTTER.	1	
- 37	100696X-ZM004	SPACER.	1	
- 38	AN316-4R	NUT	1	1
	AN935-416	WASHER,LOCK	1	1

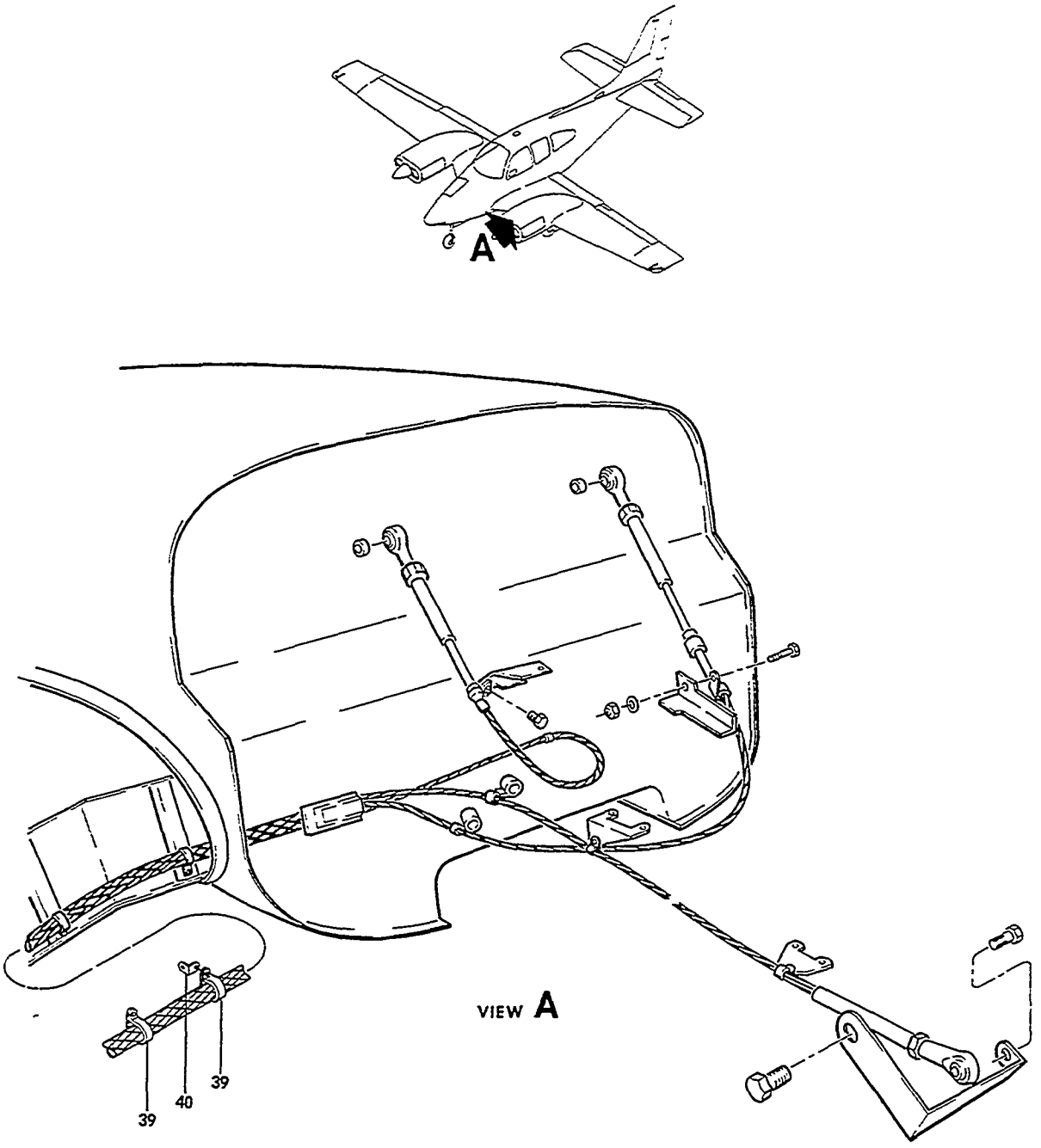

FIGURE 10-01.ENGINE CONTROLS
/SHEET 3 OF 3 SHEETS/

ATA CODE & INDEX NO.	PART NO.	1 2 3 4 5 6 7 DESCRIPTION	UNITS PER ASSY	USABLE ON CODE
10-01 - 39	MS21919D6-10//U/	CLAMP,ENGINE CONTROLS /ATTACHING PARTS/	1	1
	AN3A	BOLT	1	
	AN960-10	WASHER	1	
	MS20365-1032	NUT	1	
- 40	AN743	BRACKET,ENGINE CONTROLS CLAMP /ATTACHING PARTS/	1	1
	AN3A	BOLT	1	
	AN960-10	WASHER	1	
	MS20365-1032	NUT	1	

CODES OF EFFECTIVITY

1 TC-1 THRU TC-1607

2 TC-1 THRU TC-1607 EXCEPT TC-1380 TC-1401,TC-1403 THRU TC-1410

3 TC-1380,TC-1401, TC-1403 THRU TC-1410

4 TC-2 THRU TC-95 EXCEPT TC-40

5 TC-1,TC-40,TC-96 THRU TC-1607

6 TC-1,TC-40,TC-96 THRU TC-815 EXCEPT TC-763,TC-768,TC770, AND TC-784

7 TC-763,TC-768,TC-770 TC-784,TC-816 THRU TC-1607

"END"

76-12-01
ENGINE CONTROLS
TE-1 THRU TE-942 EXCEPT TE-938

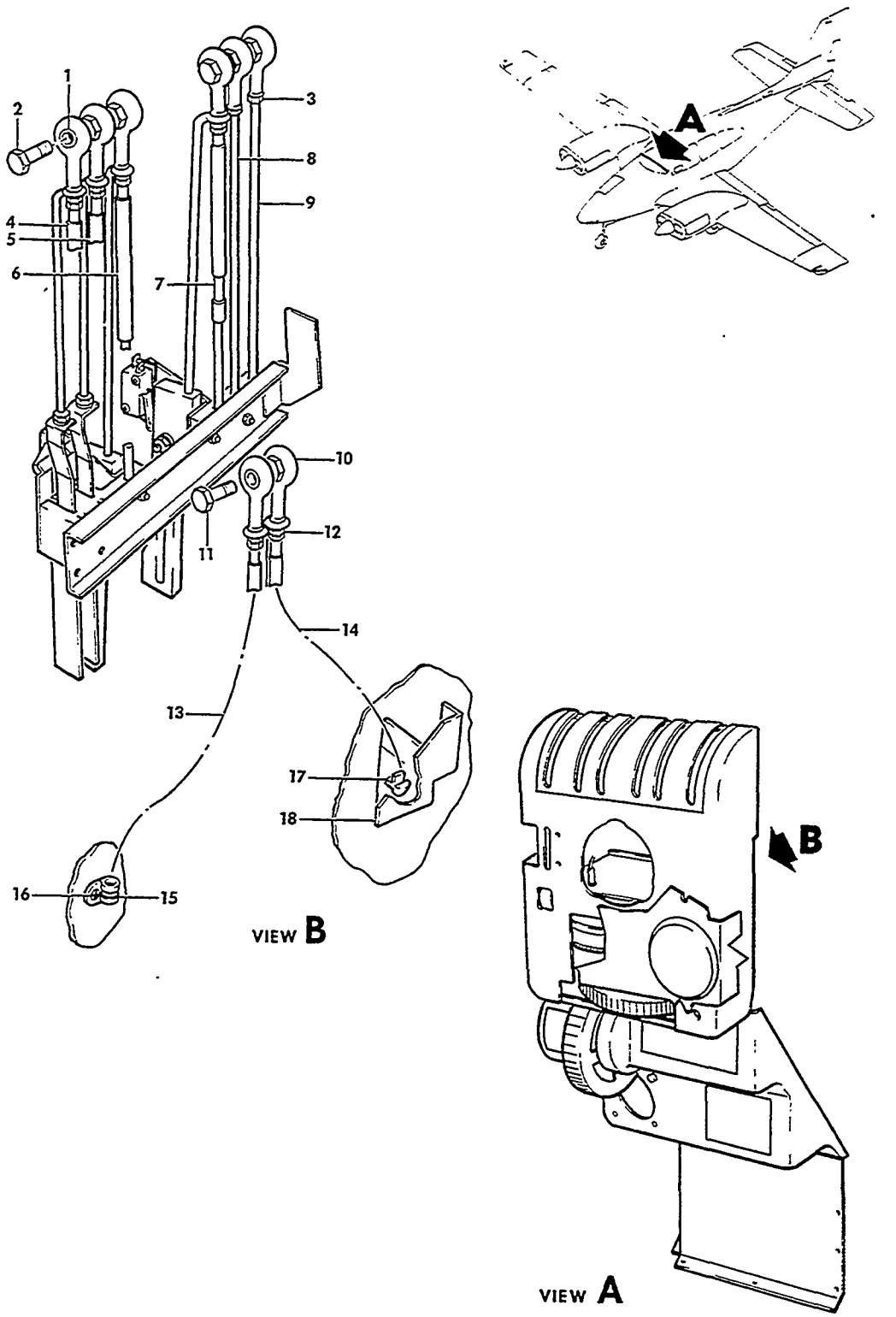

FIGURE 12-01.ENGINE CONTROLS
/SHEET 1 OF 3 SHEETS/

ATA CODE & INDEX NO.	PART NO.	DESCRIPTION 1 2 3 4 5 6 7	UNITS PER ASSY	USABLE ON CODE
12-01	96-940001	CONTROLS INSTALLATION,ENGINE.	NP	1
- 1	F34-14M	. BEARING,ROD END/ENGINE CONTROLS TO CONSOLE/ . /ATTACHING PARTS/	6	1
- 2	AN23-15A	. BOLT.	1	
	AN960-10	. WASHER.	1	
	MS20364-1032C	. NUT	1	
- 3	AN316-4R	. NUT,LOCKING	1	
	AN935-416	. WASHER,LOCK	1	
		----*----		
- 4	50-389010-23	. CONTROL ASSY,LH PROPELLER	1	1
- 5	55-4753-4190	. CONTROL ASSY,RH PROPELLER /SUPERSEDES 50-389010-25/	1	1
- 6	50-389012-19	. CONTROL ASSY,THROTTLE LH.	1	2
	41731-9	. CONTROL ASSY,THROTTLE LH.	1	3
- 7	50-389012-19	. CONTROL ASSY,THROTTLE RH.	1	2
	41731-5	. CONTROL ASSY,THROTTLE RH.	1	3
- 8	50-389012-19	. CONTROL ASSY,MIXTURE LH	1	2
	41731-5	. CONTROL ASSY,MIXTURE LH	1	3
- 9	50-389012-25	. CONTROL ASSY,MIXTURE RH	1	2
	41731-8	. CONTROL ASSY,MIXTURE RH	1	3
- 10	F34-14M	. BEARING,ROD END/INDUCTION AIR/. . . . . /ATTACHING PARTS/	2	1
- 11	AN3-7A	. BOLT.	1	
	AN960-10	. WASHER.	1	
	MS20365-1032C	. NUT	1	
- 12	AN316-4R	. NUT,LOCK.	1	
		----*----		
- 13	50-389012-21	. CONTROL ASSY,INDUCTION AIR LH	1	1
- 14	50-389012-27	. CONTROL ASSY,INDUCTION AIR RH	1	1
- 15	MS21919DG6	. CLAMP,ENGINE CONTROLS SUPPORT . . . . . /ATTACHING PARTS/	2	1
- 16	AN520-10	. SCREW	1	
	MS20365-1032	. NUT	1	
		----*----		
- 17	RA1039C	. CLIP,INDUCTION AIR CONTROLS SUPPORT . . . . . /ATTACHING PARTS/	2	1
	AN4	. BOLT.	1	
	AN960-416	. WASHER.	1	
	MS20365-428	. NUT	1	
		----*----		
- 18	96-324055-97	. SUPPORT,INDUCTION AIR CONTROLS/PART OF. . . . CONSOLE/	1	1

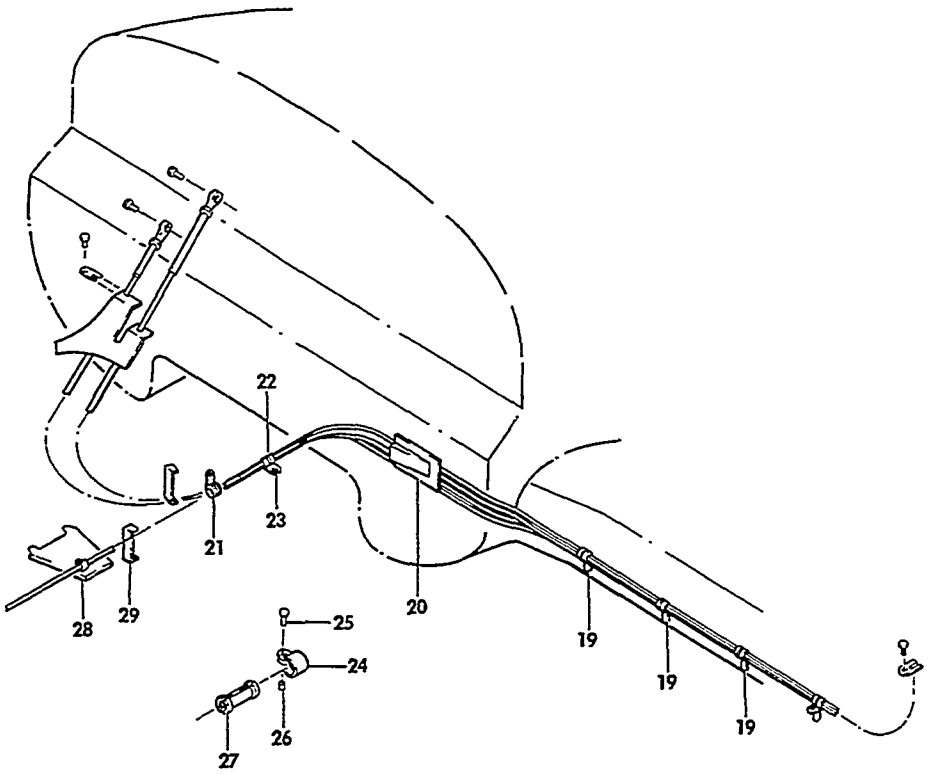

VIEW **A**

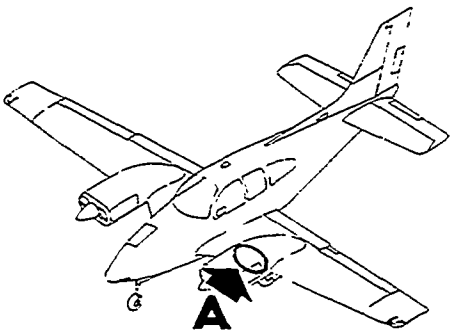

E55-159-19

FIGURE 12-01.ENGINE CONTROLS
/SHEET 2 OF 3 SHEETS/

ATA CODE & INDEX NO.	PART NO.	DESCRIPTION 1 2 3 4 5 6 7	UNITS PER ASSY	USABLE ON CODE
12-01 - 19	MS21919DG8	CLAMP,CONTROLS SUPPORT/3 LH WING,3 RH WING/	6	1
		/ATTACHING PARTS/		
	AN515-8R14	SCREW	1	
		——*——		
	106242-14-01100	TUBING,INSULATING	2	1
	106242-14-00700	TUBING,INSULATING	2	1
- 20	96-940000-9	PLATE,LH FIREWALL ENGINE CONTROL COVER	1	1
	96-940000-10	PLATE,RH FIREWALL ENGINE CONTROL COVER	1	1
		/ATTACHING PARTS/		
	AN520-10R	SCREW	4	
	NAS1031A3K	NUT	4	
		——*——		
- 21	MS21919DG10	CLAMP,CONTROL SUPPORT /LH FIREWALL/	1	1
		/ATTACHING PARTS/		
	AN520-10R	SCREW	1	
	MS20365-1032	NUT	1	
		——*——		
- 22	MS21104D8	CLAMP,LH ENGINE CONTROLS	1	1
		/ATTACHING PARTS/		
- 23	AN3-5	BOLT	1	
	AN960-10L	WASHER	1	
	MS21042L3	NUT	1	
		——*——		
	AN743-12	CLIP,LH ENGINE CONTROLS	1	1
		/ATTACHING PARTS/		
	AN3-5A	BOLT	1	
	AN960-10L	WASHER	1	
	MS21042L3	NUT	1	
		——*——		
	MS21104D6	CLAMP,RH ENGINE CONTROLS SUPPORT	1	1
		/ATTACHING PARTS/		
	AN3-4	BOLT	1	
	AN960-10L	WASHER	1	
	MS21042L3	NUT	1	
		——*——		
	MS21103-16	CLAMP,RH ENGINE CONTROLS	1	1
	MS21104D4	CLAMP,RH PROPELLER CONTROL	1	1
		/ATTACHING PARTS/		
	AN3-5A	BOLT	1	
	AN960-10L	WASHER	1	
	MS21042L3	NUT	1	
		——*——		
	AN743-12	BRACKET,CLAMP SUPPORT	1	1
		/ATTACHING PARTS/		
	AN3-5A	BOLT	1	
	AN960-10L	WASHER	1	
	MS21043L3	NUT	1	
		——*——		
- 24	AN741-4P	CLAMP PROP CONTROL SUPPORT/LH & RH ENGINES/	2	1
		/ATTACHING PARTS/		
- 25	AN3	BOLT	1	
- 26	100696X-ZG008	SPACER	1	
	MS20365-1032	NUT	1	
		——*——		
- 27	S241	BUSHING,INSULATING	2	1
- 28	96-940000-75	BRACKET,PROP GOVERNOR CONTROL	2	1
- 29	96-940019-3	BRACKET,PROP GOVERNOR CONTROL/RH ENGINE/	1	1

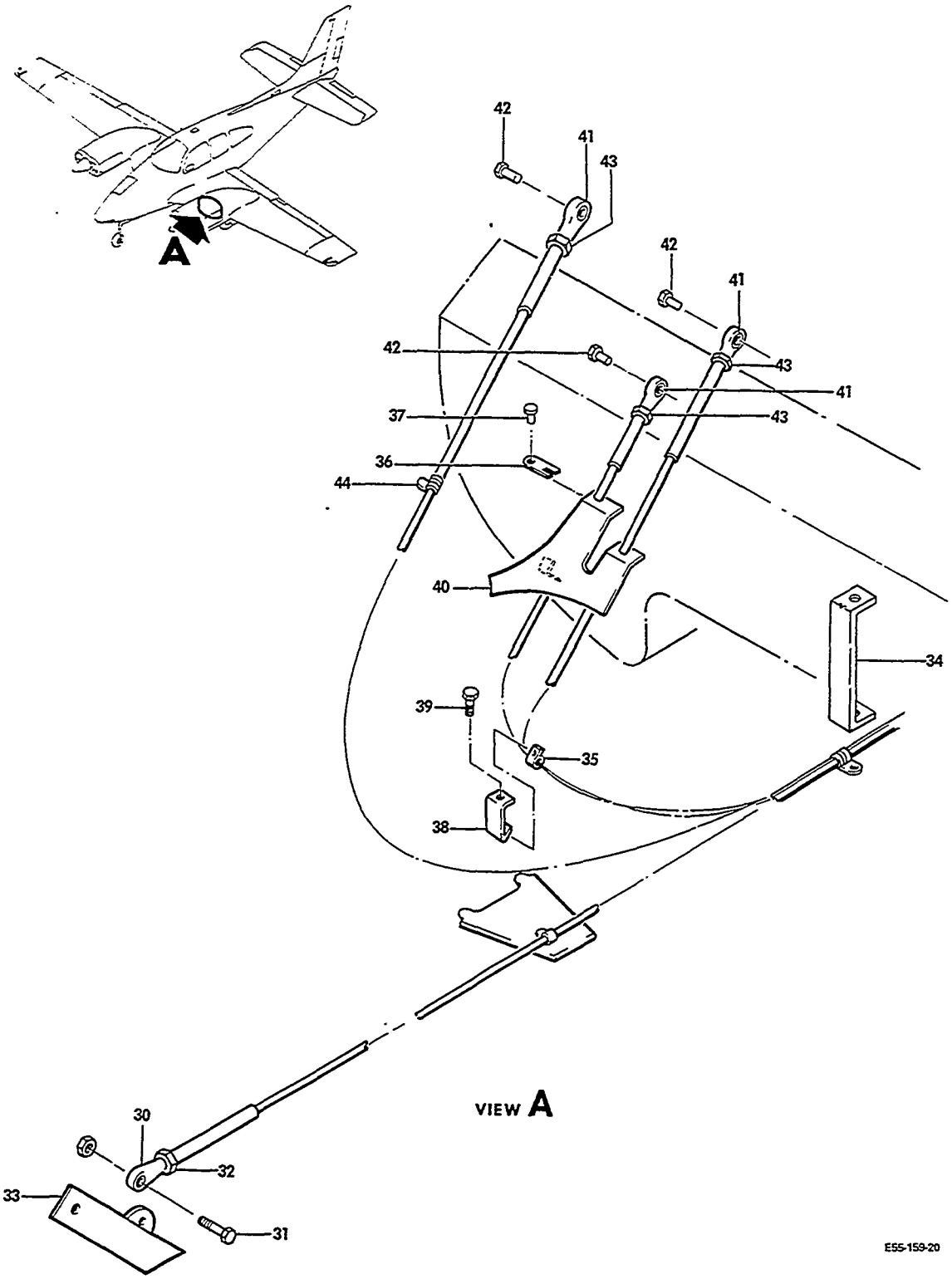

FIGURE 12-01.ENGINE CONTROLS
/SHEET 3 OF 3 SHEETS/

ATA CODE & INDEX NO.	PART NO.	DESCRIPTION 1 2 3 4 5 6 7	UNITS PER ASSY	USABLE ON CODE
12-01 - 30	F34-14M	BEARING,ROD END /ATTACHING PARTS/	2	1
- 31	AN3-7	BOLT	1	
	AN960-10L	WASHER	1	
	AN960-10	WASHER	1	
	AN310-3	NUT,CASTELLATED	1	
	MS24665-132	PIN,COTTER	1	
- 32	AN316-4R	NUT,LOCK	1	
	AN935-416	WASHER,LOCK	1	
		——*——		
- 33	35-944051-13	ARM,PROPELLER GOVERNOR CONTROL /ATTACHING PARTS/	2	1
	AN3	BOLT	1	
	AN960-10L	WASHER	1	
	AN936A10	WASHER,LOCK	1	
	MS20365-1032C	NUT	1	
		——*——		
	MS21919DG10	CLAMP,THROTTLE & MIXTURE CONTROLS/RH ENGINE/ /ATTACHING PARTS/	1	1
	AN3-5A	BOLT	1	
	AN960-10	WASHER	1	
	MS20364-1032C	NUT	1	
		——*——		
- 34	96-940019-3	BRACKET,CLAMP SUPPORT	2	1
- 35	MS21919DG10	CLAMP,MIXTURE & THROTTLE CONTROLS/LH & RH/ /ATTACHING PARTS/	4	1
	AN3	BOLT	1	
	AN960-10L	WASHER	1	
	MS20365-1032C	NUT	1	
		——*——		
- 36	RA1039C	CLIP,CONTROL SUPPORT/2 LH,& 2 RH/ /ATTACHING PARTS/	4	1
- 37	AN4	BOLT	1	
	AN960-416L	WASHER	1	
	MS20365-428C	NUT	1	
		——*——		
- 38	96-940019-1	BRACKET,ENGINE CONTROLS SUPPORT /ATTACHING PARTS/	2	1
- 39	MS20074-05-10	BOLT/REPLACES BOLT FURNISHED WITH ENGINE/	1	
		——*——		
- 40	96-940018	BRACKET,ENGINE CONTROLS SUPPORT/LH & RH/	2	1
- 41	F34-14M	BEARING,ROD END/THROTTLE,MIXTURE & AIRBOX CONTROLS/ /ATTACHING PARTS/	6	1
- 42	AN3	BOLT	1	
	AN960-10L	WASHER	1	
	AN310-3	NUT,CASTELLATED	1	
	MS24665-132	PIN,COTTER	1	
- 43	AN316-4R	NUT,LOCKING	1	
		——*——		
	AN935-416	WASHER,LOCK	1	1
- 44	MS21919G3	CLAMP,AIRBOX CONTROL/TO ENGINE MOUNT/	2	1
	100696D-2F008	SPACER/CLAMP TO ENGINE MOUNT/	2	1
	S241.	BUSHING,AIR VALVE CONTROL	2	1
	AN741-4P	CLAMP,AIR CONTROL BUSHING	2	1
	1G0696X-2G-018	SPACER/BETWEEN CLAMP & BRACKET/	2	1
	AN3	BOLT/AIR CONTROLS CLAMPS/	4	1
	AN960-102	WASHER	4	1
	MS20365-1032C	NUT	4	1

CODES OF EFFECTIVITY

1 TE-1 THRU TE-942 EXCEPT TE-938

2 TE-1 THRU TE-627 TE-638 THRU TE-942 EXCEPT TE-938

3 TE-628 THRU TE-637

"END"

76-15-01
CONSOLE ENGINE CONTROLS
TC-1 THRU TC-1607

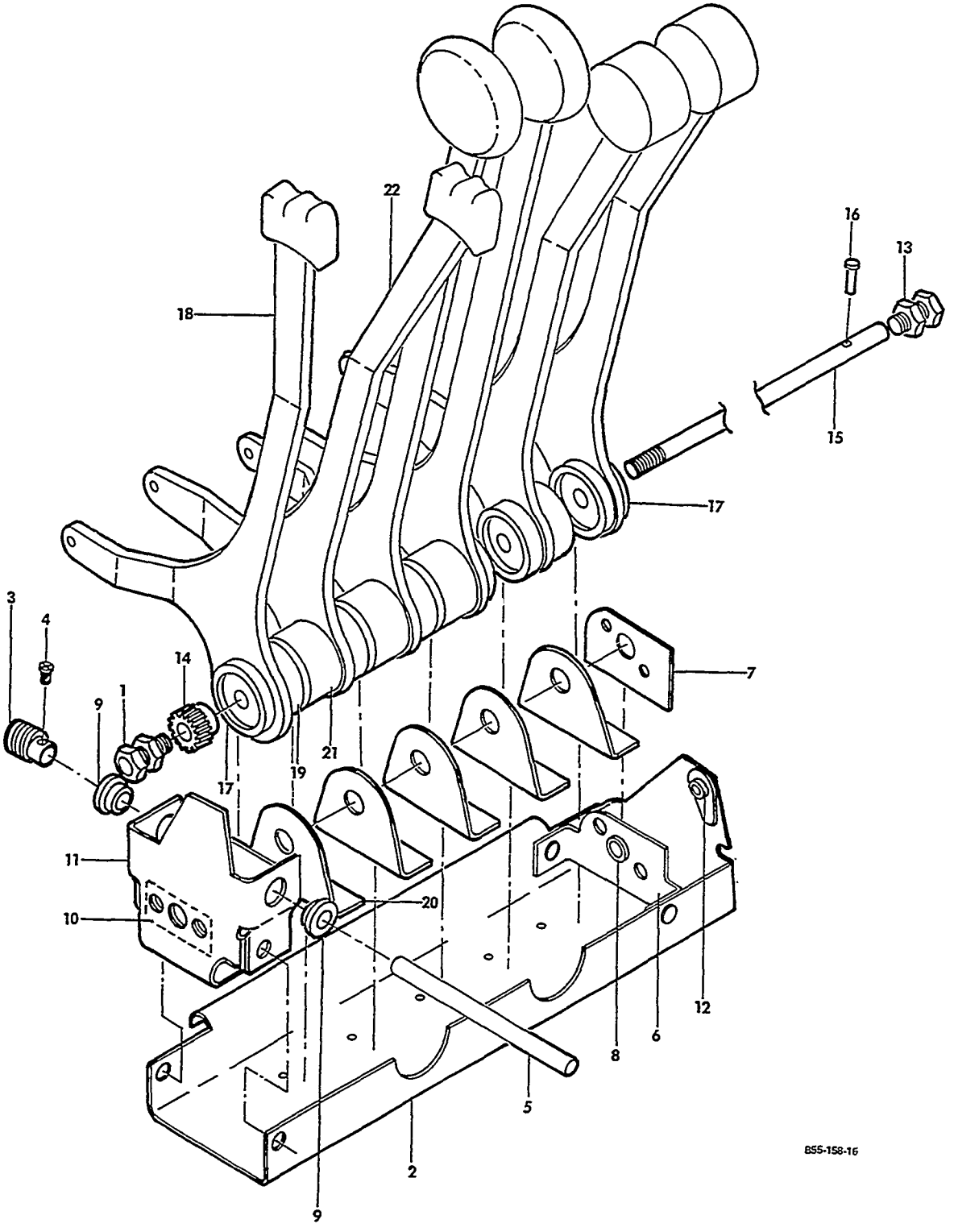

FIGURE 15-01.CONSOLE ENGINE CONTROLS
/SHEET 1 OF 3 SHEETS/

SUB-SECT UNIT & ITEM NO.	PART NO.	DESCRIPTION 1 2 3 4 5 6 7	UNITS PER ASSY	USABLE ON CODE
15-01	96-324035	CONSOLE INSTL,CONTROL	NP	1
	96-324035-21	CONSOLE INSTL,CONTROL/POST LIT/	NP	1
	96-324035-35	CONSOLE INSTL,CONTROL/WITH MAGIC HAND/	NP	2
	96-324035-37	CONSOLE INSTL,CONTROL/POST LIT/WITH MAGIC HAND/	NP	2
- 1	119	. BUSHING,ENGINE CONTROL SHAFT MOUNTING	1	1
	95-324006-151	. CONTROL ASSY,ENGINE	1	3
	96-940025	. CONTROL ASSY,ENGINE	1	4
	58-940022-3	. CONTROL ASSY,ENGINE	1	5
	R 96-324006-261	. . SUPPORT ASSY,ENGINE CONTROLS.	1	1
- 2	96-324006-257	. . . SUPPORT	1	1
- 3	HLUH	. . . GEAR,WORM	1	1
- 4	59-022-094-0375	. . . PIN	1	1
- 5	96-324006-265	. . . SHAFT,WORM GEAR	1	1
		/ATTACHING PARTS/		
	AN380-3-3	. . . PIN,COTTER.	2	
- 6	50-320093-6	. . . BRACKET	1	1
- 7	50-320093-10	. . . DOUBLER	1	1
- 8	295158-56	. . . SPACER.	1	1
	50-320092	. . . BRACKET ASSY/CONTROL FRICTION LOCK/	1	1
- 9	F312	. . . . BEARING	2	1
- 10	50-320092-4	. . . . SPACER.	1	1
	NAS447-10SP	. . . . NUTPLATE.	2	1
- 11	50-320092-2	. . . . BRACKET	1	1
- 12	22A17-02	. . . . NUTPLATE.	1	1
- 13	119	. . BUSHING,ENGINE CONTROL SHAFT.	1	1
	AN936A616	. . WASHER/UNDER BUSHING MOUNTING NUT/.	1	1
	AN960-616L	. . WASHER/UNDER HEAD OF BUSHING/	1	1
- 14	50-320091	. . GEAR,FRICTION LOCK.	1	1
- 15	50-320024	. . SHAFT,LEVER PIVOT	1	1
- 16	AN392-13	. . PIN	1	1
	AN380-2-3	. . PIN,COTTER.	1	1
- 17	50-944036-3	. . SPACER.	2	1
	96-324006-135	. . LEVER ASSY,LH PROP CONTROL.	1	3
	95-324006-137	. . . LEVER,LH PROP CONTROL	1	3
	50-944043-3	. . . KNOB.	1	3
	96-940027	. . LEVER ASSY,LH PROP CONTROL.	1	4
	96-940027-1	. . . LEVER,LH PROP CONTROL	1	4
	50-944043-3	. . . KNOB.	1	4
- 18	96-940029	. . LEVER ASSY,LH PROP CONTROL.	1	5
	96-940029-1	. . . LEVER,LH PROP CONTROL	1	5
	50-944043-3	. . . KNOB.	1	5
	50-944036-13	. . SPACER.	2	6
- 19	50-944036-25	. . SPACER.	1	5
	95-324006-259	. . SPACER.	1	7
	95-324006-269	. . SPACER.	1	8
- 20	96-324055-151	. . SPACER.	1	5
	50-944036-11	. . SPACER.	1	6
- 21	50-944036-23	. . SPACER.	1	5
	95-324006-139	. . LEVER ASSY,RH PROP CONTROL.	1	3
	95-324006-141	. . . LEVER,RH PROP CONTROL	1	3
	50-944044-3	. . . KNOB.	1	3
	96-940026	. . LEVER ASSY,RH PROP CONTROL.	1	4
	96-940026-1	. . . LEVER,RH PROP CONTROL	1	4
	50-944044-3	. . . KNOB.	1	4
- 22	96-940028	. . LEVER ASSY,RH PROP CONTROL.	1	5
	96-940028-1	. . . LEVER,RH PROP CONTROL	1	5
	50-944044-3	. . . KNOB.	1	5

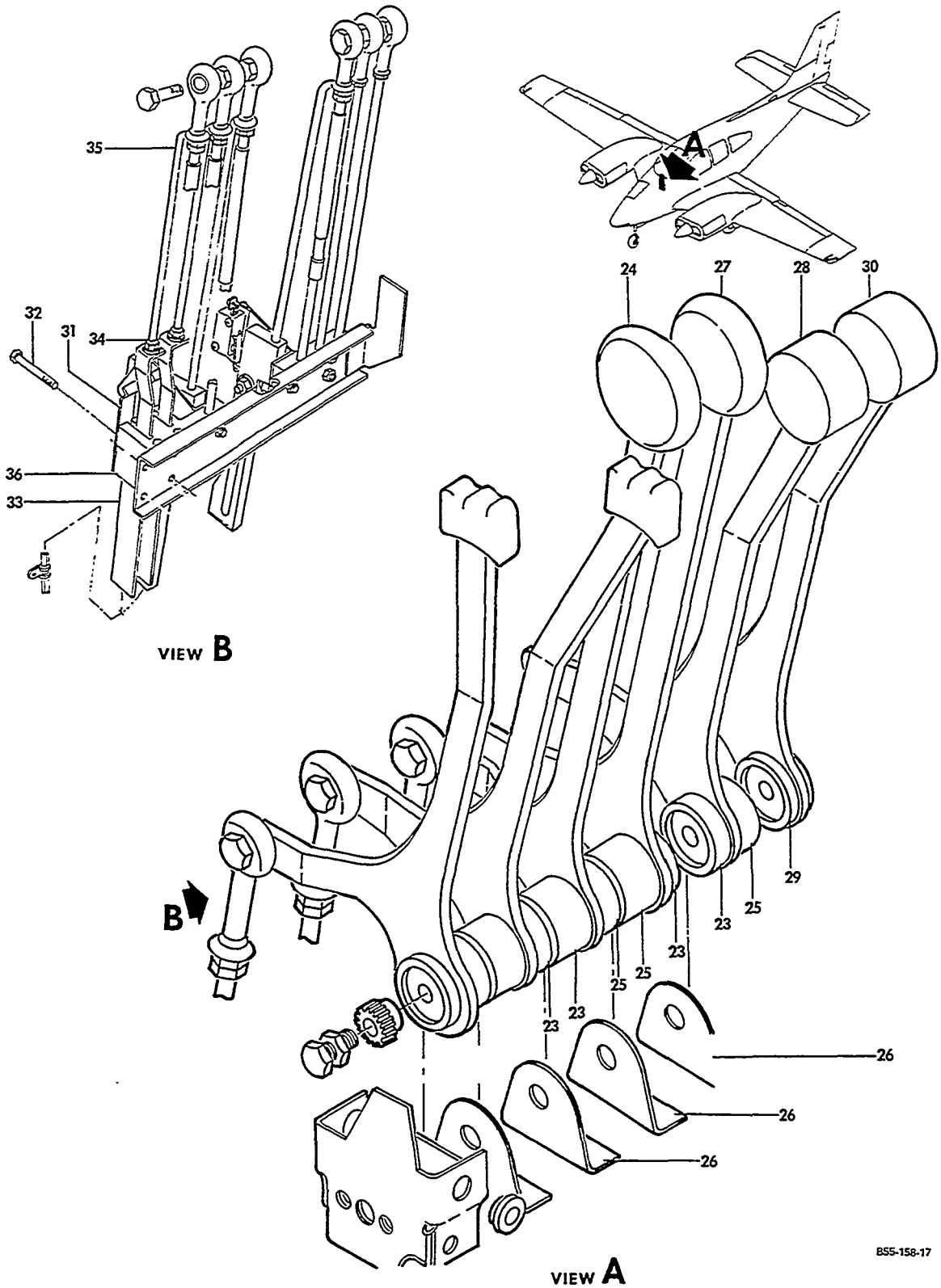

FIGURE 15-01.CONSOLE ENGINE CONTROLS
/SHEET 2 OF 3 SHEETS/

ATA CODE & INDEX NO.	PART NO.	DESCRIPTION 1 2 3 4 5 6 7	UNITS PER ASSY	USABLE ON CODE
15-01 - 23	50-944036-7	. . SPACER.	4	1
	95-324006-143	. . LEVER ASSY,LH THROTTLE.	1	3
	95-324006-145	. . . LEVER,LH THROTTLE	1	3
	50-944039-3	. . . KNOB.	1	3
	58-940016-1	. . LEVER ASSY,LH THROTTLE.	1	4
	58-940016-3	. . . LEVER,LH THROTTLE	1	4
	50-944039-3	. . . KNOB.	1	4
- 24	58-940025	. . LEVER ASSY,LH THROTTLE.	1	5
	58-940025-1	. . . LEVER,LH THROTTLE	1	5
	50-944039-3	. . . KNOB.	1	5
- 25	50-944036-11	. . SPACER.	3	1
	95-324006-259	. . SPACER.	3	7
- 26	95-324006-269	. . SPACER.	3	9
	95-324006-147	. . LEVER ASSY,RH THROTTLE CONTROL.	1	3
	95-324006-149	. . . LEVER	1	3
	50-944040-3	. . . KNOB.	1	3
	58-940017-1	. . LEVER ASSY,RH THROTTLE CONTROL.	1	4
	58-940017-3	. . . LEVER,RH THROTTLE CONTROL	1	4
	50-944040-3	. . . KNOB.	1	4
- 27	58-940026	. . LEVER ASSY,RH THROTTLE CONTROL.	1	5
	58-940026-1	. . . LEVER,RH THROTTLE CONTROL	1	5
	50-944040-3	. . . KNOB.	1	5
	95-324006-193	. . LEVER ASSY,LH MIXTURE CONTROL	1	3
	95-324006-195	. . . LEVER,LH MIXTURE CONTROL.	1	3
	50-944041-3	. . . KNOB.	1	3
	58-940012-1	. . LEVER ASSY,LH MIXTURE CONTROL	1	4
	58-940012-3	. . . LEVER	1	4
	50-944041-3	. . . KNOB.	1	4
- 28	58-940027	. . LEVER ASSY,LH MIXTURE CONTROL	1	5
	58-940027-1	. . . LEVER	1	5
	50-944041-3	. . . KNOB.	1	5
- 29	50-944036-13	. . SPACER.	1	1
	95-324006-197	. . LEVER ASSY,RH MIXTURE CONTROL	1	3
	95-324006-199	. . . LEVER,RH MIXTURE CONTROL.	1	3
	50-944042-3	. . . KNOB.	1	3
	58-940013-1	. . LEVER ASSY,RH MIXTURE CONTROL	1	4
	58-940013-3	. . . LEVER,RH MIXTURE CONTROL.	1	4
	50-944042-3	. . . KNOB.	1	4
- 30	58-940028	. . LEVER ASSY,RH MIXTURE CONTROL	1	5
	58-940028-1	. . . LEVER,RH MIXTURE CONTROL.	1	5
	50-944042-3	. . . KNOB.	1	5
- 31	95-324006-87	. SPRING.	1	1
		/ATTACHING PARTS/		
- 32	AN3-15A	. BOLT.	2	
	AN960-10L	. WASHER.	2	
		——*——		
- 33	95-324006-85	. CAM	1	1
		/ATTACHING PARTS/		
- 34	AN315-3R	. NUT	2	
	AN935-10	. WASHER,LOCK	2	
		——*——		
- 35	95-324006-243	. ROD	1	1
- 36	95-324006-91	. CLAMP,ENGINE CONTROLS	1	1
		/ATTACHING PARTS/		
	AN3-10A	. BOLT.	2	
	MS21047L3	. NUTPLATE.	4	
		——*——		

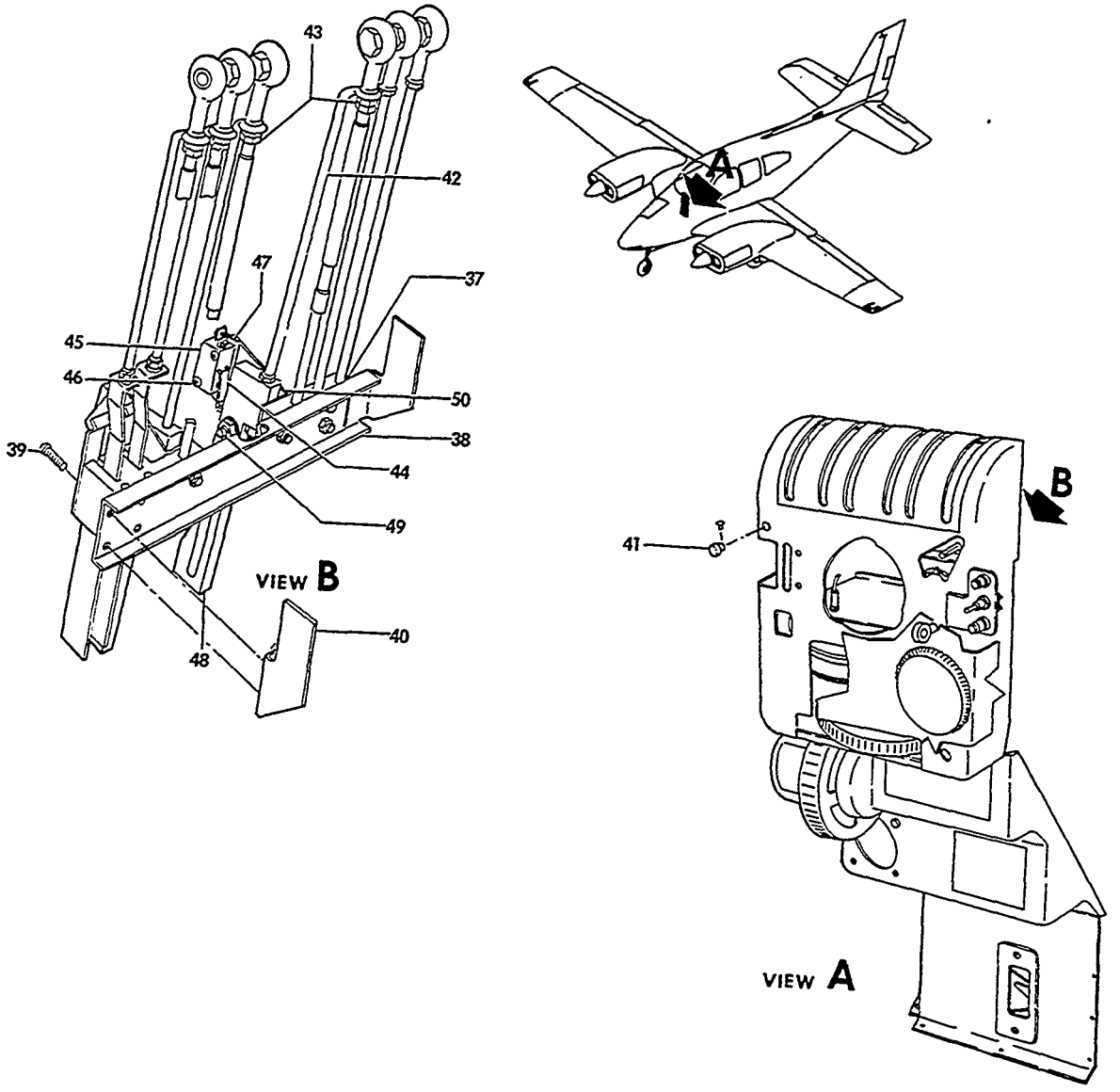

BS5-158-18

FIGURE 15-01.CONSOLE ENGINE CONTROLS
/SHEET 3 OF 3 SHEETS/

ATA CODE & INDEX NO.	PART NO.	DESCRIPTION 1 2 3 4 5 6 7	UNITS PER ASSY	USABLE ON CODE
15-01 - 37	95-324006-89	. CLAMP,ENGINE CONTROLS	1	1
		/ATTACHING PARTS/		
	AN3-10A	. BOLT.	2	
	AN3-7A	. BOLT.	2	
	MS21047L3	. NUTPLATE.	4	
- 38	95-324006-93	. CHANNEL	1	1
		/ATTACHING PARTS/		
- 39	AN515-10R	. SCREW	4	
	MS20365-1032	. NUT	4	
- 40	95-324006-83	. BRACKET,LH SUPPORT.	1	1
	95-324006-84	. BRACKET,RH SUPPORT.	1	1
- 41	50-320148-2	. KNOB,FRICTION LOCK.	1	1
		/ATTACHING PARTS/		
	AN5650845	. SCREW,SET	2	
	95-324006-125	. THROTTLE WARNING INSTL,CONSOLE.	NP	1
- 42	95-324006-121	. . ROD	1	1
		/ATTACHING PARTS/		
- 43	MS35650-302	. . NUT,LOCKING	2	
	MS20365-1032	. . NUT	1	
	AN960-10L	. . WASHER.	1	
	AN936A10	. . WASHER,LOCK	1	
- 44	JV20	. . ACTUATOR,WARNING SWITCH	1	1
- 45	AN3234-2	. . SWITCH.	1	1
		/ATTACHING PARTS/		
- 46	MS35206-220	. . SCREW	2	
	AN960-4	. . WASHER.	2	
	MS20365-440	. . NUT	2	
- 47	50-364108	. . INSULATOR	2	1
- 48	50-364129	. . CAM	1	1
		/ATTACHING PARTS/		
- 49	MS35206-233	. . SCREW	1	
	100951X025VB	. . WASHER.	2	
	AN960-6	. . WASHER.	1	
	100696X-YM015	. . SPACER.	1	
	MS20365-632	. . NUT	1	
- 50	96-324006-123	. BRACKET,LH THROTTLE WARNING	1	1
	96-324006-124	. BRACKET,RH THROTTLE WARNING	1	1

CODES OF EFFECTIVITY

1	TC-1 THRU TC-1607	2	TC-1024 THRU TC-1607
3	TC-1 THRU TC-1298	4	TC-1299 THRU TC-1533
5	TC-1534 THRU TC-1607	6	TC-1 THRU TC-1533
7	TC-1 THRU TC-460	8	TC-461 THRU TC-1533
9	TC-461 THRU TC-1607		

"END"

76-16-01
CONSOLE ENGINE CONTROLS AND THROTTLE WARNING
TE-1 THRU TE-942 EXCEPT TE-938

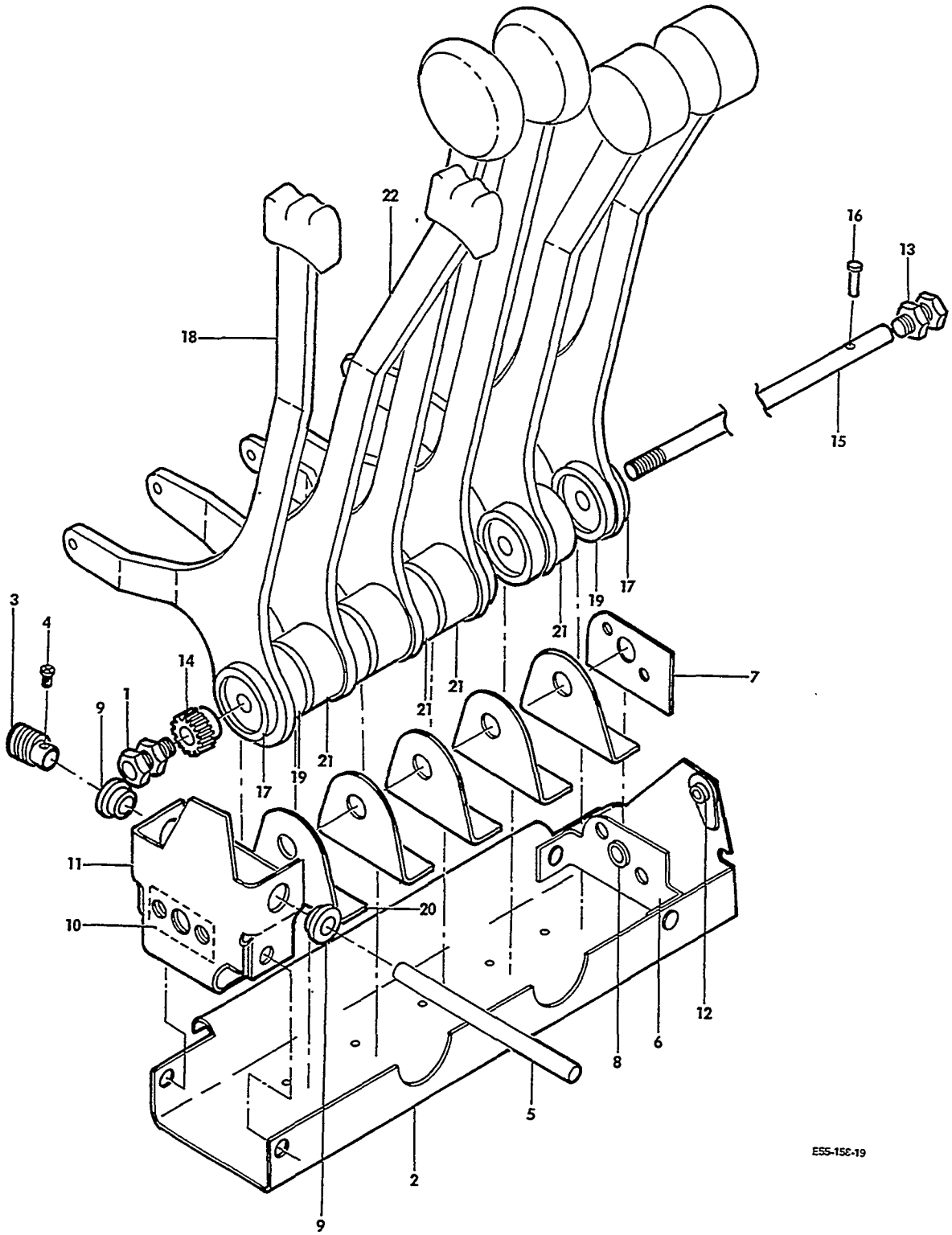

FIGURE 16-01.ENGINE CONTROLS,CONSOLE
/SHEET 1 OF 3 SHEETS/

ATA CODE & INDEX NO.	PART NO.	DESCRIPTION 1 2 3 4 5 6 7	UNITS PER ASSY	USABLE ON CODE
16-01	96-324055	CONSOLE INSTL,CONTROL/WITH RHEOSTAT	NP	3
	96-324055-1	CONSOLE INSTL,CONTROL/W/O RHEOSTAT/	NP	3
	96-324055-103	CONSOLE INSTL,CONTROL/MAGIC HAND/W/RHEOSTAT/. .	NP	3
	96-324055-105	CONSOLE INSTL,CONTROL/MAGIC HAND/W/O RHEOSTAT/.	NP	3
	58-324025-1	CONSOLE INSTL,CONTROL	NP	2
	58-324025-3	CONSOLE INSTL,CONTROL/MAGIC HAND/	NP	1
- 1	119	. BUSHING,ENGINE CONTROL SHAFT MOUNTING	1	1
	96-324055-71	. ENGINE CONTROL ASSY,CONSOLE	1	3
	58-940011-1	. ENGINE CONTROL ASSY,CONSOLE	1	4
	58-940022	. ENGINE CONTROL ASSY,CONSOLE/MAY BE USED AS. . AN ASSEMBLY AS SPARES FOR 58-940011-1/	1	5
	95-324006-261	. . SUPPORT ASSY,ENGINE CONTROLS.	1	1
- 2	95-324006-257	. . . SUPPORT	1	1
- 3	HL4H	. . . GEAR,WORM . . . . . /ATTACHING PARTS/	1	1
- 4	59-022-094-0375	. . . PIN	1	
		——*——		
- 5	95-324006-265	. . . SHAFT ASSY,WORM GEAR. . . . . /ATTACHING PARTS/	1	1
	AN380-3-3	. . . PIN,COTTER.	1	
		——*——		
- 6	50-320093-6	. . . BRACKET	1	1
- 7	50-320093-10	. . . DOUBLER	1	1
- 8	295158-56	. . . BEARING	1	1
	50-320092	. . . BRACKET ASSY,FRICTION CONTROL LOCK. . . .	1	1
- 9	F312	. . . . BEARING	2	1
- 10	50-320092-4	. . . . SPACER.	1	1
	NAS447-10SP	. . . . NUTPLATE.	2	1
- 11	50-320092-2	. . . . BRACKET	1	1
- 12	22A17-02	. . . NUTPLATE.	1	1
- 13	119	. . BUSHING,ENGINE CONTROL SHAFT.	1	1
	AN936A616	. . WASHER,LOCK	1	1
	AN960-616L	. . WASHER.	1	1
- 14	50-320091	. . GEAR,FRICTION LOCK.	1	1
- 15	50-320024	. . SHAFT,FRICTION LOCK . . . . . /ATTACHING PARTS/	1	1
- 16	AN392-13	. . PIN	1	
	AN380-2-3	. . PIN,COTTER.	1	
		——*——		
- 17	50-944036-3	. . SPACER.	2	1
- 18	96-324055-73	. . LEVER ASSY,LH PROP GOVERNOR CONTROL	1	3
	58-940018-1	. . LEVER ASSY,LH PROP GOVERNOR CONTROL	1	6
	58-940020-1	. . LEVER ASSY,LH PROP GOVERNOR CONTROL	1	7
	58-940023	. . LEVER ASSY,LH PROP GOVERNOR CONTROL	1	5
- 19	50-944036-13	. . SPACER.	2	8
	50-944036-25	. . SPACER.	1	5
- 20	96-324055-151	. . SPACER,FRICTION LOCK.	1	5
- 21	50-944036-11	. . SPACER.	4	8
	50-944036-23	. . SPACER.	1	5
- 22	96-324055-77	. . LEVER ASSY,RH PROP GOVERNOR CONTROL	1	3
	58-940019-1	. . LEVER ASSY,RH PROP GOVERNOR CONTROL	1	6
	58-940021-1	. . LEVER ASSY,RH PROP GOVERNOR CONTROL	1	7
	58-940024	. . LEVER ASSY,RH PROP GOVERNOR CONTROL	1	5

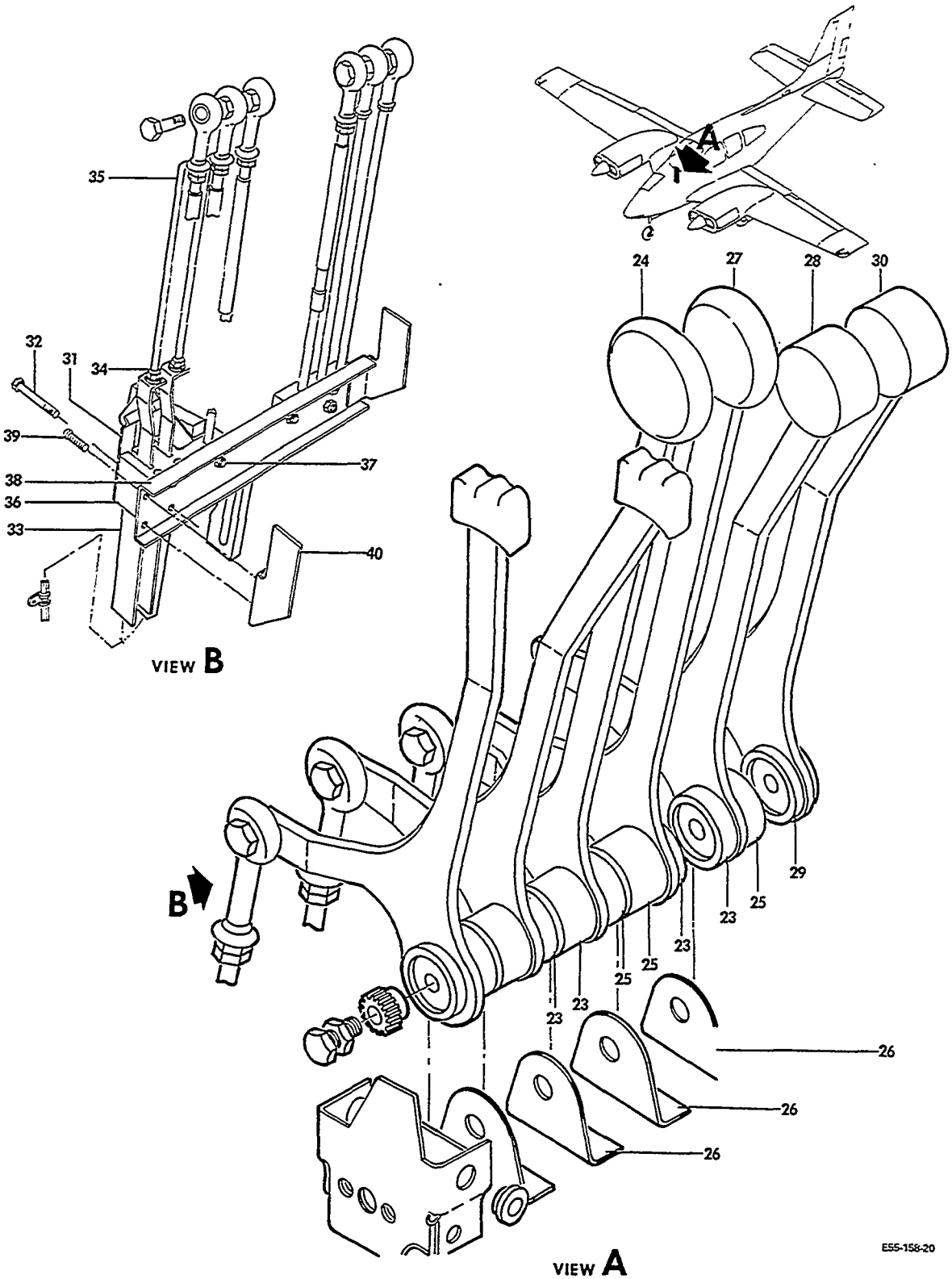

FIGURE 16-01.ENGINE CONTROLS,CONSOLE
/SHEET 2 OF 3 SHEETS/

ATA CODE & INDEX NO.	PART NO.	DESCRIPTION 1 2 3 4 5 6 7	UNITS PER ASSY	USABLE ON CODE
16-01 - 23	50-944036-7	. . SPACER.	4	1
- 24	95-324006-143	. . LEVER ASSY,LH THROTTLE.	1	3
	58-940016-1	. . LEVER ASSY,LH THROTTLE.	1	4
	58-940025	. . LEVER ASSY,LH THROTTLE.	1	5
- 25	50-944036-11	. . SPACER.	3	5
- 26	95-324006-269	. . SPACER,FRICTION LOCK.	5	8
	95-324006-269	. . SPACER,FRICTION LOCK.	4	5
- 27	95-324006-147	. . LEVER ASSY,RH THROTTLE.	1	3
	58-940017-1	. . LEVER ASSY,RH THROTTLE.	1	4
	58-940026	. . LEVER ASSY,RH THROTTLE.	1	5
- 28	95-324006-193	. . LEVER ASSY,LH MIXTURE CONTROL	1	3
	58-940012-1	. . LEVER ASSY,LH MIXTURE CONTROL	1	4
	58-940027	. . LEVER ASSY,LH MIXTURE CONTROL	1	5
- 29	50-944036-13	. . SPACER.	1	5
- 30	95-324006-197	. . LEVER ASSY,RH MIXTURE CONTROL	1	3
	58-940013-1	. . LEVER ASSY,RH MIXTURE CONTROL	1	4
	58-940028	. . LEVER ASSY,RH MIXTURE CONTROL	1	5
- 31	95-324006-87	. SPRING,PROPELLER DETENT	1	1
		/ATTACHING PARTS/		
- 32	AN3-16A	. BOLT.	2	
	AN960-10	. WASHER.	2	
	MS20365-1032	. NUT	2	
		----*----		
- 33	95-324006-85	. CAM,PROPELLER DETENT.	2	1
		/ATTACHING PARTS/		
- 34	AN315-3R	. NUT	2	
	AN935-10	. WASHER,LOCK	2	
		----*----		
- 35	95-324006-243	. ROD,PROPELLER DETENT.	2	1
- 36	95-324006-91	. CLAMP,LH ENGINE CONTROLS.	1	1
	95-324006-89	. CLAMP,RH ENGINE CONTROLS.	1	1
		/ATTACHING PARTS/		
- 37	AN515-8R	. SCREW	6	
	AN960-8	. WASHER.	6	
	MS20365-832	. NUT	6	
		----*----		
- 38	95-324006-93	. CHANNEL	1	1
		/ATTACHING PARTS/		
- 39	AN515-10R	. SCREW	4	
	MS20365-1032	. NUT	4	
		----*----		
- 40	95-324006-83	. BRACKET,LH SUPPORT.	1	
	95-324006-84	. BRACKET,RH SUPPORT.	1	1

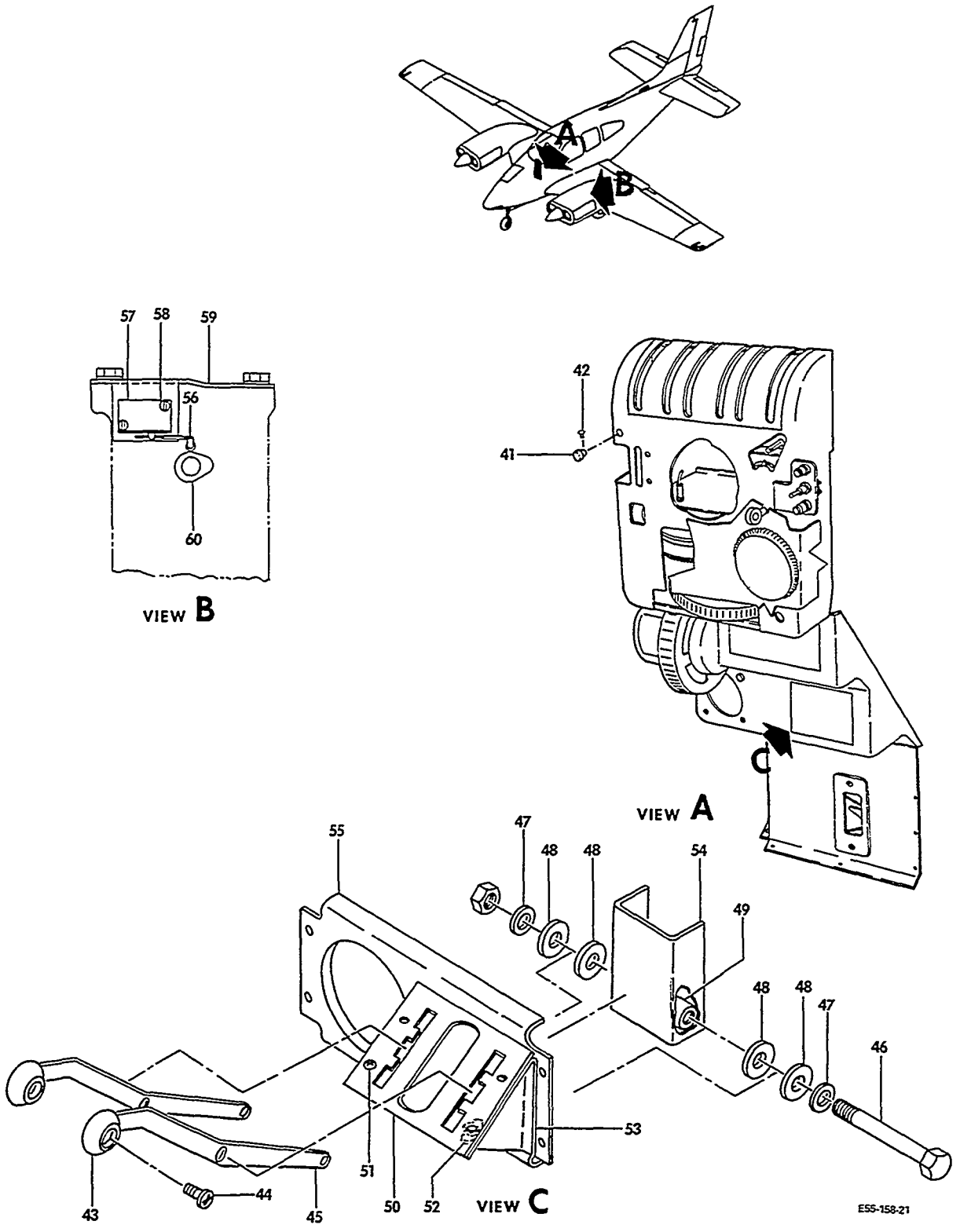

FIGURE 16-01.ENGINE CONTROLS,CONSOLE
/SHEET 3 OF 3 SHEETS/

SUB-SECT UNIT & ITEM NO.	PART NO.	DESCRIPTION 1 2 3 4 5 6 7	UNITS PER ASSY	USABLE ON CODE
16-01 - 41	50-320148-2	. KNOB,FRICTION LOCK CONTROL.	1	1
		/ATTACHING PARTS/		
- 42	AN565D8H5	. SCREW,SET	2	
		——+——		
	96-324055-153	. CONTROL INSTL,INDUCTION AIR	NP	1
- 43	R 96-324055-31	. . KNOB HALF	4	1
		/ATTACHING PARTS/		
- 44	3/16X3/4	. . SCREW,CATALOG	1	
		——+——		
- 45	96-324055-33	. . LEVER,INDUCTION AIR CONTROL	2	1
		/ATTACHING PARTS/		
- 46	AN4-34A	. . BOLT.	1	
- 47	AN960-416	. . WASHER.	2	
- 48	96-324055-43	. . SPACER.	4	1
- 49	100696A-ZN131	. . SPACER.	1	
	MS20365-428	. . NUT	1	
		——+——		
- 50	96-324055-41	. . PLATE	1	1
		/ATTACHING PARTS/		
- 51	AN515-6R6	. . SCREW	4	
		——+——		
	96-324055-89	. . BRACKET ASSY,LH	1	1
	96-324055-90	. . BRACKET ASSY,RH	1	1
- 52	NAS697A06	. . . NUTPLATE.	2	1
- 53	96-324055-39	. . . BRACKET,LH.	1	1
	96-324055-40	. . . BRACKET,RH.	1	1
- 54	96-324055-37	. . CHANNEL,LEVER SUPPORT	1	1
- 55	96-324055-35	. . CHANNEL	1	1
		/ATTACHING PARTS/		
	AN515-632R	. . SCREW	4	
	NAS697A06	. . NUTPLATE.	4	
		——+——		
	96-910030	THROTTLE WARNING INSTL./LOCATED ON THROTTLE . .	NP	1
		BODY ON ENGINE/		
- 56	JV5	. ACTUATOR,THROTTLE WARNING SWITCH.	1	1
- 57	MS25253-2	. SWITCH,THROTTLE WARNING	1	
		/ATTACHING PARTS/		
- 58	AN515-4R12	. SCREW	2	
	AN960-4	. WASHER.	4	
	MS20365-440	. NUT	2	
		——+——		
- 59	96-910030-3	. BRACKET,THROTTLE WARNING SWITCH	1	1
- 60	96-910030-1	. CAM,THROTTLE WARNING SWITCH	1	1

CODES OF EFFECTIVITY

1	TE-1 THRU TE-942 EXCEPT TE-938	2	TE-768 THRU TE-942 EXCEPT TE-938
3	TE-1 THRU TE-767	4	TE-768 THRU TE-909
5	TE-910 THRU TE-942 EXCEPT TE-938	6	TE-768 THRU TE-789
7	TE-790 THRU TE-909	8	TE-1 THRU TE-909

"END"

CHAPTER

77

ENGINE INDICATING

LIST OF PAGES & TABLE OF CONTENTS
FOR
CHAPTER 77-00-00 ENGINE INDICATING

CHAP/SUB-SECT & UNIT	PAGE NO.	EFFECTIVE DATE	TABLE OF CONTENTS
77-00-00	1	04/05/85	LIST OF PAGES & TABLE OF CONTENTS
77-20-01	1	04/05/85	ENGINE TEMPERATURE INDICATING SYSTEM/REFERENCE/

77-20-01
ENGINE TEMPERATURE INDICATING SYSTEM/REFERENCE/
FOR BREAKDOWN OF ENGINE TEMPERATURE
INDICATING SYSTEM SEE CHAPTER 78.

"END"

CHAPTER

78

EXHAUST

LIST OF PAGES & TABLE OF CONTENTS
FOR
CHAPTER 78-00-00 EXHAUST

CHAP/SUB-SECT & UNIT	PAGE NO.	EFFECTIVE DATE	TABLE OF CONTENTS
78-00-00	1	04/05/85	LIST OF PAGES & TABLE OF CONTENTS
78-10-01	1	03/10/78	EXHAUST SYSTEM
78-10-01	2	03/10/78	TC-1 THRU TC-1607
78-10-01	3	04/05/85	
78-10-01	4	03/10/78	
78-10-01	5	04/05/85	
78-12-01	1	03/10/78	ENGINE EXHAUST SYSTEM
78-12-01	2	03/10/78	TE-1 THRU TE-937,TE-939 THRU TE-942
78-12-01	3	04/05/85	
78-13-01	1	04/05/85	ENGINE EXHAUST SYSTEM
78-13-01	2	04/05/85	
78-13-01	3	04/05/85	
78-13-01	4	04/05/85	
78-13-01	5	04/05/85	

78-10-01
EXHAUST SYSTEM
TC-1 THRU TC-1607

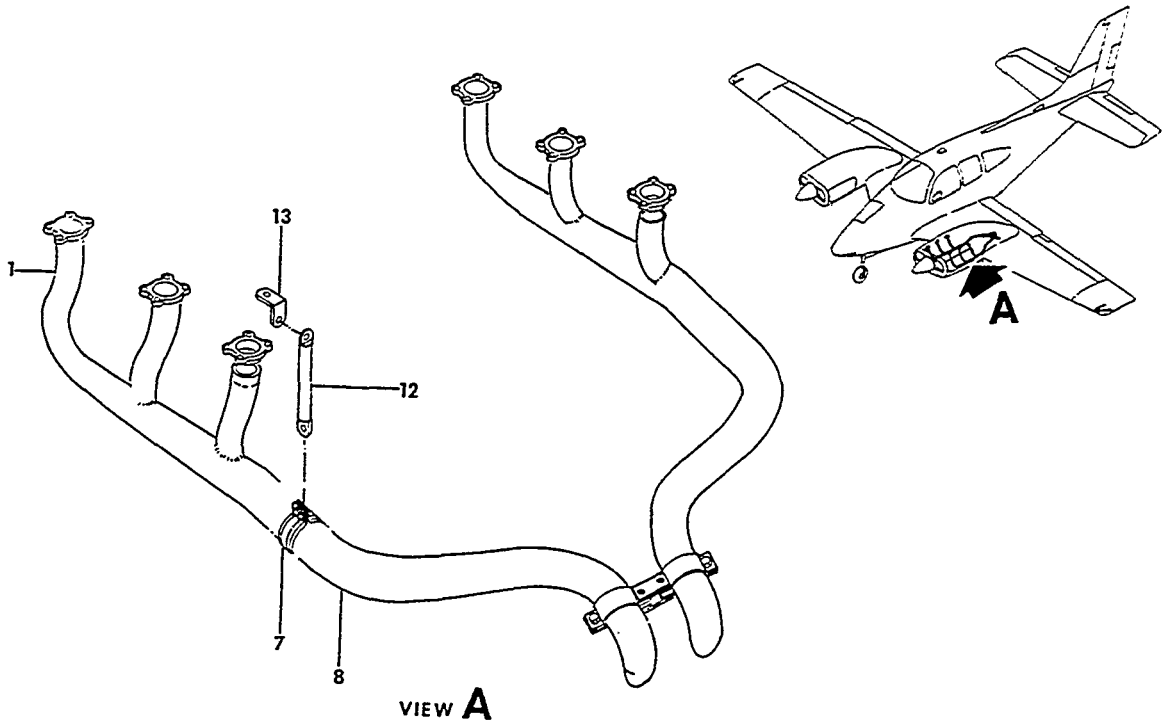

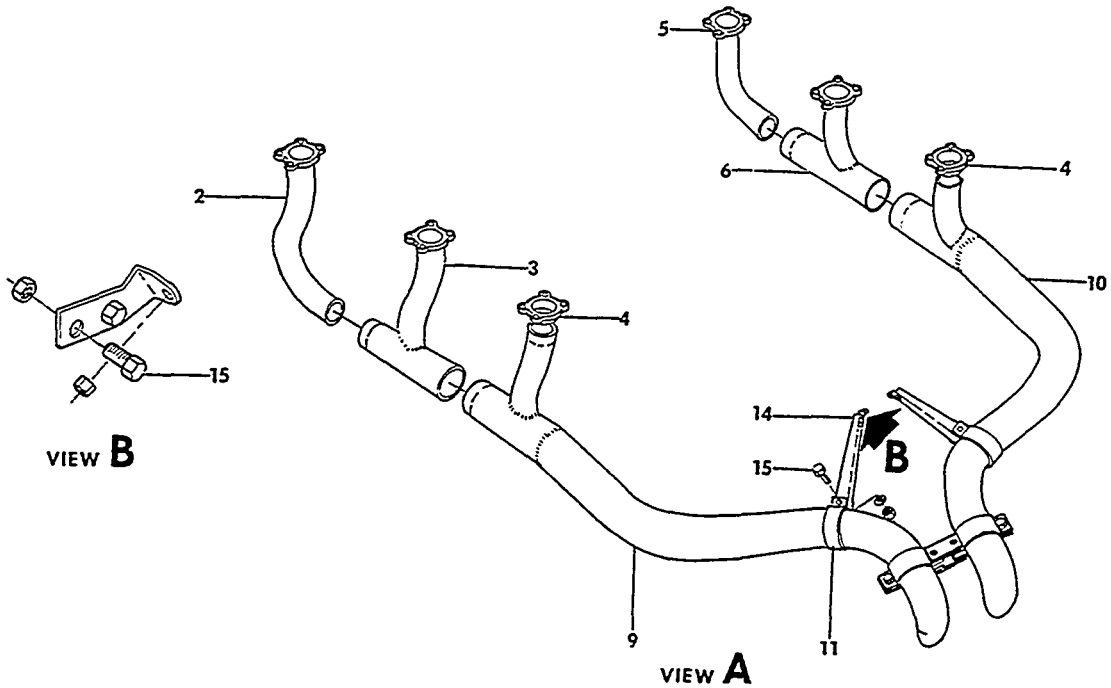

FIGURE 10-01.EXHAUST SYSTEM
/SHEET 1 OF 2 SHEETS/

SUB-SECT UNIT & ITEM NO.	PART NO.	DESCRIPTION 1 2 3 4 5 6 7	UNITS PER ASSY	USABLE ON CODE
10-01	96-950000-47	EXHAUST SYSTEM INSTL/LH/.	NP	1
	96-950000-48	EXHAUST SYSTEM INSTL/RH/.	NP	1
	96-950000-65	EXHAUST SYSTEM INSTL/LH/.	NP	2
	96-950000-66	EXHAUST SYSTEM INSTL/RH/.	NP	2
	R 96-950002-75	EXHAUST SYSTEM,LH/SEE 78-13-01 FOR SPARES/. . .	NP	3
	96-950002-77	EXHAUST SYSTEM,RH/SEE 78-13-01 FOR SPARES/. . .	NP	3
- 1	96-950000-9	. STACK ASSY/LH/.	1	1
	96-950000-10	. STACK ASSY/RH/.	1	1
	96-950000-51	. STACK ASSY/LH/.	1	2
	96-950000-52	. STACK ASSY/RH/.	1	2
- 2	96-950002-9	. STACK ASSY/CYLINDER NO.6/	1	3
- 3	96-950002-7	. STACK ASSY/CYLINDER NO.4/	1	3
- 4	96-950002-47	. STACK ASSY/CYLINDERS NO.1 AND 2/.	1	3
- 5	96-950002-33	. STACK ASSY/CYLINDER NO.5/	1	3
- 6	96-950002-31	. STACK ASSY/CYLINDER NO.3/	1	3
- 7	35-950004-17	. CLAMP	1	4
		/ATTACHING PARTS/		
	AN4-4A	. BOLT.	4	
	AN960-416	. WASHER.	4	
	AN363-428	. NUT	4	
		----*----		
- 8	96-950000-43	. COLLECTOR ASSY/LH ENGINE OUTBD/	1	1
	96-950000-61	. COLLECTOR ASSY/LH ENGINE OUTBD/	1	2
	96-950000-44	. COLLECTOR ASSY/RH ENGINE INBD/.	1	1
	96-950000-62	. COLLECTOR ASSY/RH ENGINE INBD/.	1	2
	96-950000-45	. COLLECTOR ASSY/LH ENGINE INBD/.	1	1
	96-950000-63	. COLLECTOR ASSY/LH ENGINE INBD/.	1	2
	96-950000-46	. COLLECTOR ASSY/RH ENGINE OUTBD/	1	1
	96-950000-64	. COLLECTOR ASSY/RH ENGINE OUTBD/	1	2
- 9	96-950002-55	. COLLECTOR ASSY/LH ENGINE OUTBD/	1	3
	96-950002-57	. COLLECTOR ASSY/RH ENGINE INBD/.	1	3
- 10	96-950002-59	. COLLECTOR ASSY/LH ENGINE INBD/.	1	3
		/WITHOUT MIXTURE CONTROL/		
	96-950002-61	. COLLECTOR ASSY/RH ENGINE OUTBD/	1	3
		/WITHOUT MIXTURE CONTROL/		
- 11	96-950002-69	. CLAMP	1	3
		/ATTACHING PARTS/		
	AN6C-15	. BOLT.	1	
	AN310-6	. NUT	1	
	MS24665-300	. PIN	1	
	AN960C616	. WASHER.	1	
		----*----		
- 12	96-950000-27	. SUPPORT,EXHAUST CLAMP	1	4
		/ATTACHING PARTS/		
	AN3-4A	. BOLT.	1	
	AN960-10	. WASHER.	1	
	AN365-1032	. NUT	1	
		----*----		
- 13	96-950000-29	. BRACKET	1	4
- 14	96-950002-73	. CHANNEL	1	3
		/ATTACHING PARTS/		
- 15	AN4-5	. BOLT.	2	
	AN960-416	. WASHER.	2	
	MS20365-428C	. NUT	2	
		----*----		

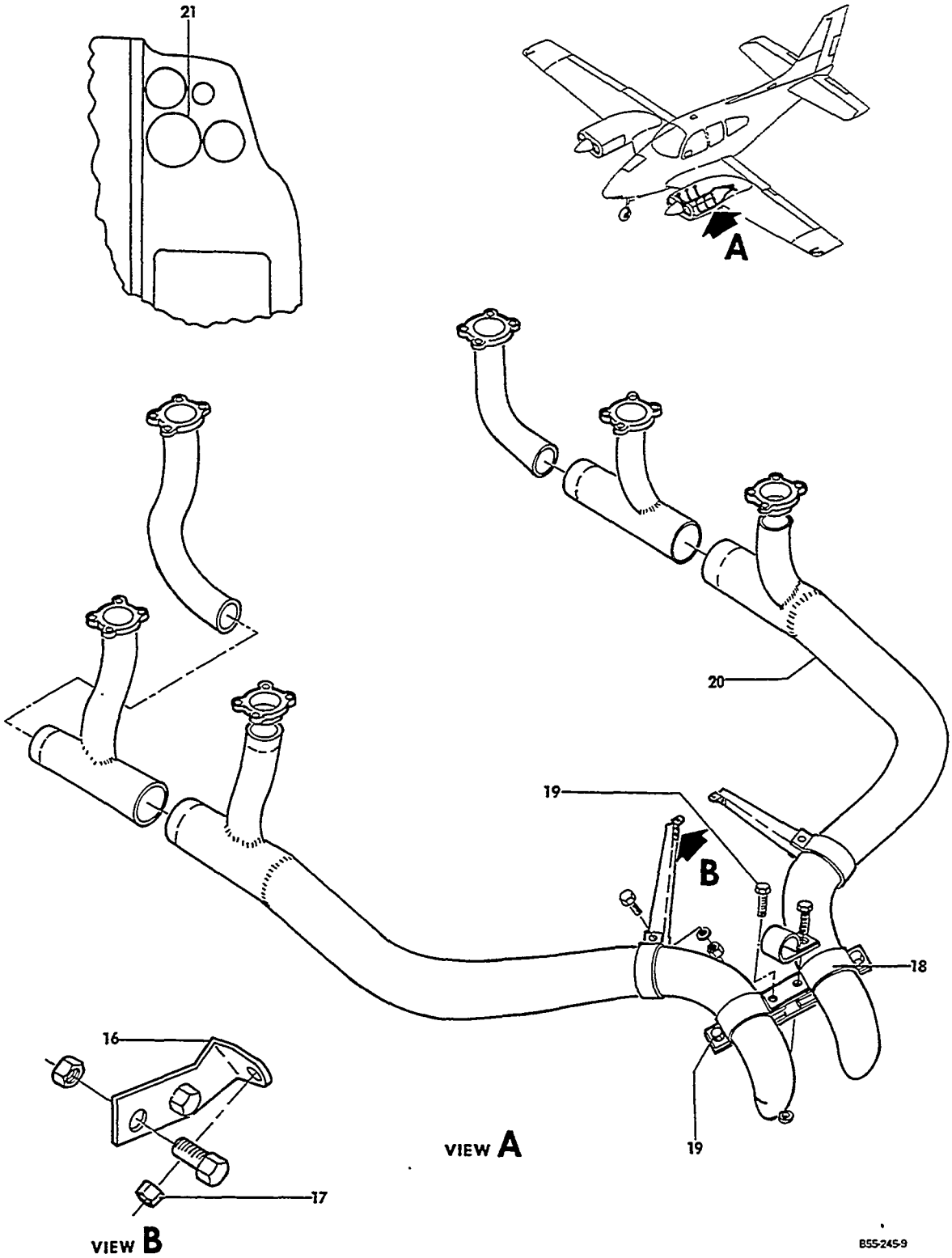

FIGURE 10-01.EXHAUST SYSTEM
/SHEET 2 OF 2 SHEETS/

SUB-SECT UNIT & ITEM NO.	PART NO.	DESCRIPTION 1 2 3 4 5 6 7	UNITS PER ASSY	USABLE ON CODE
10-01 - 16	96-950002-71	. BRACKET . . . . . /ATTACHING PARTS/	1	3
- 17	AN365-428	. NUT	1	
		——*——		
- 18	96-950011	. CLAMP/SUPERSEDES 96-950000-39/. . . . . /ATTACHING PARTS/	2	5
- 19	AN4A	. BOLT.	4	
	AN960-416	. WASHER.	4	
	MS20365-428	. NUT	4	
		——*——		
	AN743P13	. BRACKET	2	4
	96-324101	INDICATOR INSTL,MIXTURE CONTROL	NP	5
	96-324101-7	INDICATOR INSTL,MIXTURE CONTROL/INTERNALLY LIT/	NP	6
- 20	R 96-324101-1	. STACK ASSY/LH ENGINE INBD/WITH MIXTURE CONT/.	1	5
	R 96-324101-2	. STACK ASSY/RH ENGINE OUTBD/WITH MIXTURE CONT/	1	5
- 21	205-10A	. INDICATOR,MIXTURE CONTROL . . . . . /SUPERSEDES 136 INDICATOR/	1	5
	205-10AL	. INDICATOR,MIXTURE CONTROL/INTERNALLY LIT/ . .	1	6

CODES OF EFFECTIVITY

1	TC-1 THRU TC-250 EXCEPT TC-202	2	TC-202,TC-251 THRU TC-389 EXCEPT TC-305 TC-343,TC-354,TC-376 TC-377,TC-385 THRU TC-388
3	TC-305, TC-343,TC-354 TC-376,TC-377,TC-385 THRU TC-388,TC-390 THRU TC-1607	4	TC-1 THRU TC-389 EXCEPT TC-305,TC-343 TC-354,TC-376,TC-377 TC-385 THRU TC-388
5	TC-502 THRU TC-1607	6	TC-1299 THRU TC-1607

"END"

78-12-01
ENGINE EXHAUST SYSTEM
TE-1 THRU TE-937,TE-939 THRU TE-942

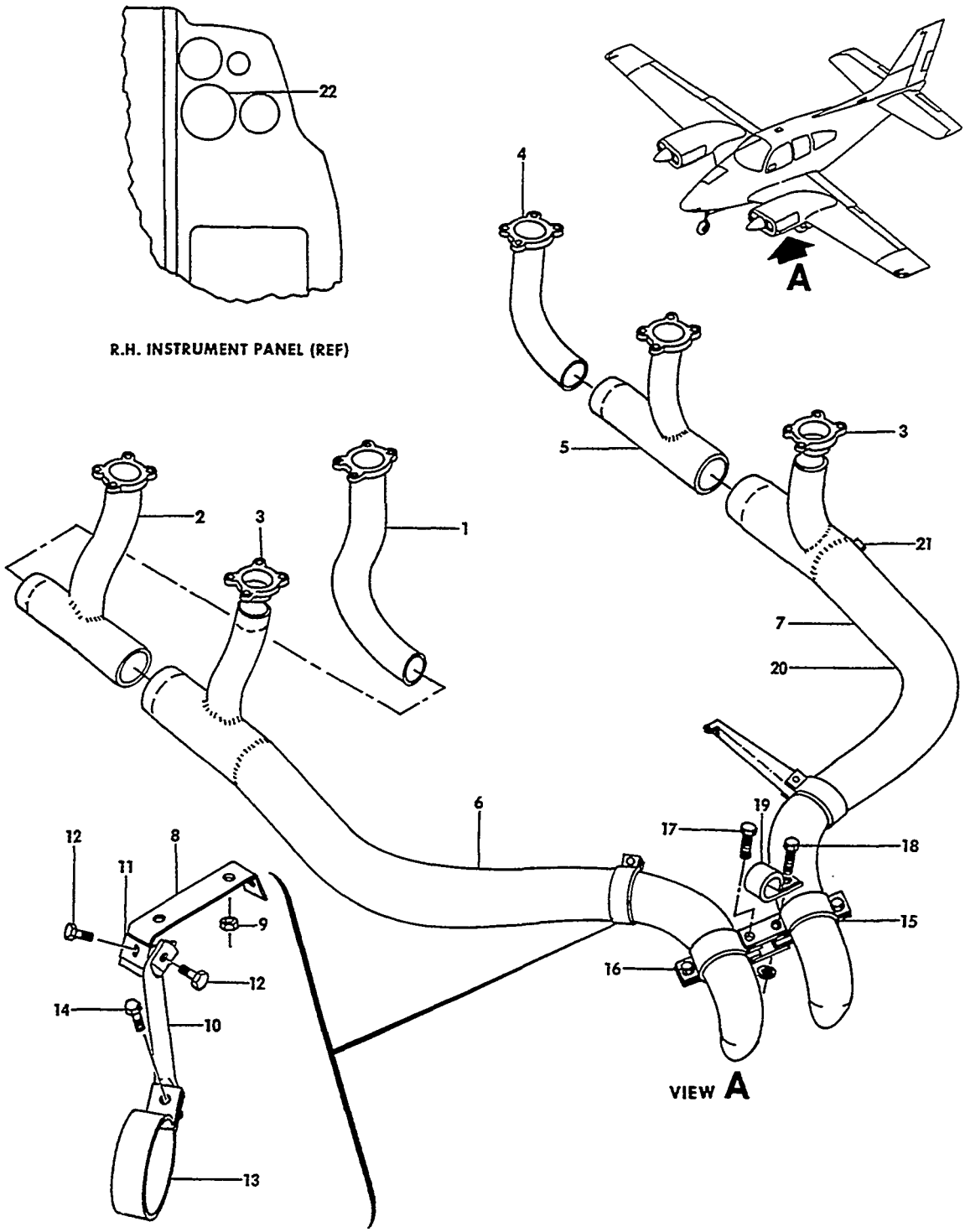

E55-245-7

FIGURE 12-01.ENGINE EXHAUST SYSTEM

SUB-SECT UNIT & ITEM NO.		PART NO.	DESCRIPTION 1 2 3 4 5 6 7	UNITS PER ASSY	USABLE ON CODE
12-01	R	96-950002-79	EXHAUST SYSTEM,LH/SEE 78-13-01 FOR SPARES/. . .	NP	1
		96-950002-81	EXHAUST SYSTEM,RH/SEE 78-13-01 FOR SPARES/. . .	NP	1
- 1		96-950002-9	. STACK ASSY/CYLINDER NO.6/	1	1
- 2		96-950002-7	. STACK ASSY/CYLINDER NO.4/	1	1
- 3		96-950002-47	. STACK ASSY,STUB/CYLINDERS NO.1 & 2/	2	1
- 4		96-950002-33	. STACK ASSY/CYLINDER NO.5/	1	1
- 5	R	96-950002-31	. STACK ASSY/CYLINDER NO.3/	1	1
- 6		96-950002-55	. STACK ASSY,LH ENGINE OUTBD.	1	1
		96-950002-57	. STACK ASSY,RH ENGINE INBD	1	1
- 7		96-950002-59	. STACK ASSY,LH ENGINE INBD . . . . . /WITHOUT ALCOR MIXTURE CONTROL/	1	1
		96-950002-61	. STACK ASSY,RH ENGINE OUTBD. . . . . /WITHOUT ALCOR MIXTURE CONTROL/	1	1
- 8		96-940012-1	. BRACKET,EXHAUST SUPPORT . . . . . /ATTACHING PARTS/	1	1
- 9		MS20364-428C	. NUT	2	
			----*----		
- 10		96-950002-85	. BRACE,LH EXHAUST SUPPORT.	1	1
		96-950002-86	. BRACE,RH EXHAUST SUPPORT.	1	1
- 11		96-950002-83	. CLIP,EXHAUST SUPPORT BRACE. . . . . /ATTACHING PARTS/	2	1
- 12		AN4C5	. BOLT.	2	
		AN960C416	. WASHER.	2	
		MS20365-428C	. NUT	2	
			----*----		
- 13		96-950002-87	. CLAMP . . . . . /ATTACHING PARTS/	2	1
- 14		AN4C6	. BOLT.	1	
		AN960C416	. WASHER.	1	
		AN310-4	. NUT,CASTELLATED	1	
		MS24665-298	. PIN,COTTER.	1	
			----*----		
- 15		96-950011	. CLAMP . . . . . /ATTACHING PARTS/	2	1
- 16		AN4-5A	. BOLT.	2	
- 17		AN4-10A	. BOLT.	1	
- 18		AN4-11A	. BOLT.	1	
		AN960-416	. WASHER.	4	
		MS20365-428	. NUT	4	
			----*----		
- 19		96-910001-87	CLAMP,BREATHER TUBE SUPPORT	1	2
		96-324101	INDICATOR INSTL,MIXTURE CONTROL	NP	1
		96-324101-7	INDICATOR INSTL,MIXTURE CONTROL . . . . . /INTERNALLY LIGHTED INSTRUMENT/	NP	1
- 20		96-324101-1	. STACK ASSY,LH ENGINE INBD/USED WITH ALCOR . . PROBE/	1	1
		96-324101-2	. STACK ASSY,RH ENGINE OUTBD/USED WITH ALCOR. . PROBE/	1	1
	R	1136B16	. CONTROL KIT,ALCOR MIXTURE	1	3
	R	1136B16A	. CONTROL KIT,ALCOR MIXTURE	1	4
		1136B16AL	. CONTROL KIT,ALCOR MIXTURE . . . . . /INTERNALLY LIGHTED INSTRUMENT/	1	1
	R	1136B16A	. . LEAD,MIXTURE CONTROL.	1	1
- 21	R	MCI106-53	. . BOSS,PROBE.	1	1
- 22	R	MODEL 136	. . INDICATOR,MIXTURE	1	3
	R	205-10A	. . INDICATOR,MIXTURE	1	4
		205-10AL	. . INDICATOR,MIXTURE/INTERNALLY LIGHTED/ . . .	1	1

CODES OF EFFECTIVITY

1	TE-1 THRU TE-942 EXCEPT TE-938	2	TE-1 THRU TE-855
3	TC-1 THRU TC-1132 TE-1 THRU TE-604	4	TC-1133 THRU TC-1607 TE-605 THRU TE-937 TE-939 THRU TE-942

"END"

78-13-01
ENGINE EXHAUST SYSTEM

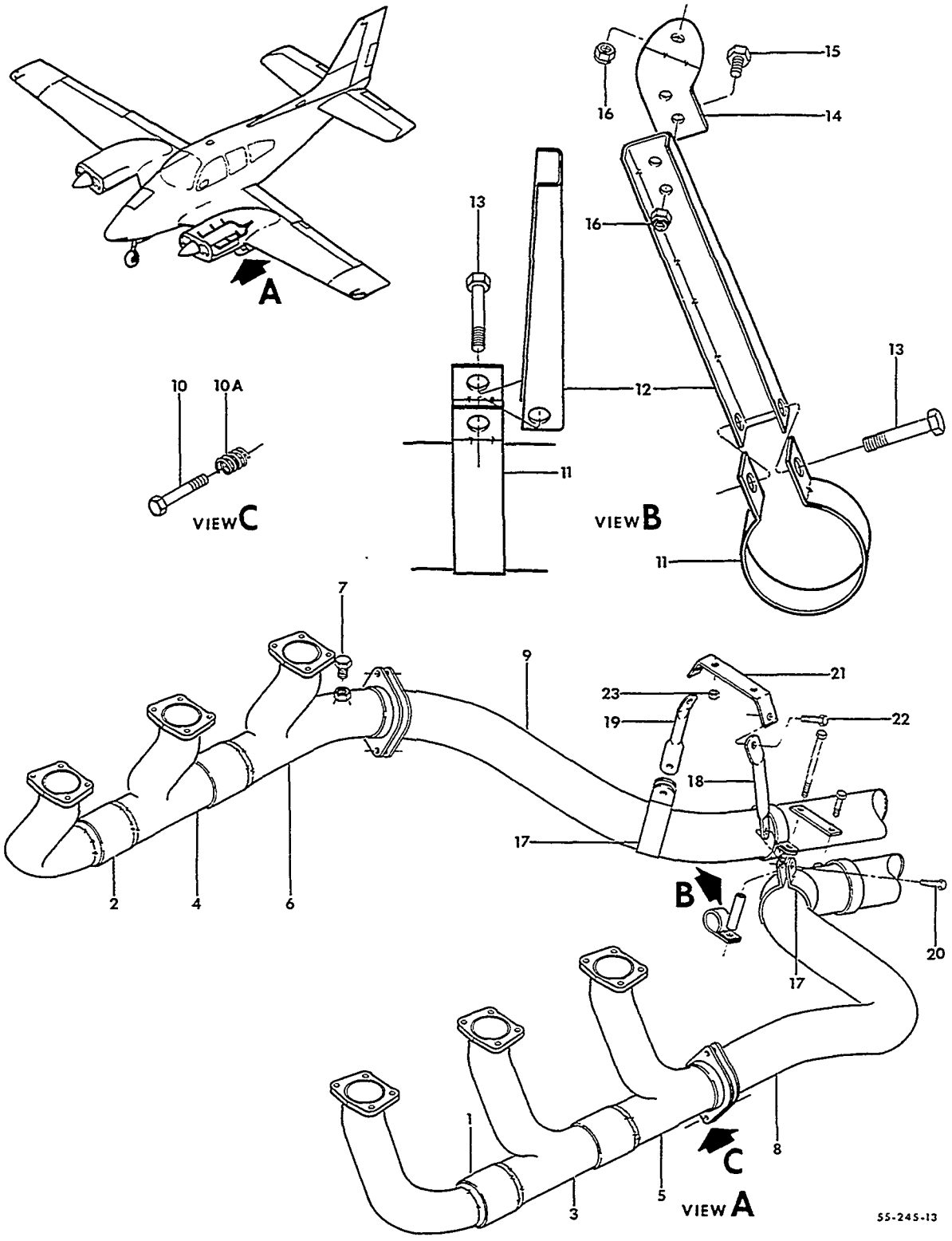

FIGURE 13-01. ENGINE EXHAUST SYSTEM
/SHEET 1 OF 2 SHEETS/

SUB-SECT UNIT & ITEM NO.	PART NO.	DESCRIPTION 1 2 3 4 5 6 7	UNITS PER ASSY	USABLE ON CODE
13-01	R 96-950004-1	EXHAUST SYSTEM INSTL,LH ENGINE.	NP	2
	R 96-950004-5	EXHAUST SYSTEM INSTL,LH ENGINE.	NP	1
	R 96-950004-3	EXHAUST SYSTEM INSTL,RH ENGINE.	NP	2
	R 96-950004-7	EXHAUST SYSTEM INSTL,RH ENGINE.	NP	1
	R 96-950004-9	. EXHAUST STACK ASSY,LH OUTBD/LH ENGINE/. . . .	1	
	R 96-950004-11	. EXHAUST STACK ASSY,RH INBD/LH ENGINE/	1	
	R 96-950004-13	. EXHAUST STACK ASSY,LH INBD/RH ENGINE/	1	
	R 96-950004-15	. EXHAUST STACK ASSY,RH OUTBD/RH ENGINE/. . . .	1	
- 1	R 96-950004-33	. . STACK ASSY/LH FWD/.	1	
- 2	R 96-950004-35	. . STACK ASSY/RH FWD/.	1	
- 3	R 96-950004-29	. . STACK ASSY/LH CENTER/	1	
- 4	R 96-950004-31	. . STACK ASSY/RH CENTER/	1	
- 5	R 96-950004-25	. . STACK ASSY/LH AFT/.	1	
- 6	R 96-950004-27	. . STACK ASSY/RH AFT/.	1	
	R 96-950004-39	. . . STACK,EXHAUST	1	
	R 58-950000-20	. . . TUBE.	1	
	R 96-950000-67	. . . FLANGE/COMMON 6 PLACES/	1	
	R MCI106-53	. . . BOSS.	1	
- 7	R MCI106-200	. . . PLUG.	1	
	R MCI106-150	. . . GASKET.	1	
- 8	R 96-950004-55	. . TAILPIPE ASSY,LH/LH ENGINE/	1	
- 9	R 96-950004-57	. . TAILPIPE ASSY,RH/LH ENGINE/	1	
	R 96-950004-59	. . TAILPIPE ASSY,LH/RH ENGINE/	1	
	R 96-950004-61	. . TAILPIPE ASSY,RH/RH ENGINE/	1	
		/ATTACHING PARTS/		
- 10	R AN3-15	. . BOLT.	4	
	R AN960-10	. . WASHER.	8	
- 10A	R 186-218	. . SPRING.	4	
	R 130909N6	. . NUT	4	
	R AN380-2-3	. . PIN,COTTER.	4	
	R 628260	. GASKET/EXHAUST PORT/.	6	
- 11	R 58-950000-41	. CLAMP	2	1
- 12	R 96-950002-73	. CHANNEL	2	1
		/ATTACHING PARTS/		
- 13	R AN6C15	. BOLT.	2	
	R AN960C616	. WASHER.	4	
	R AN310-6	. NUT	2	
	R MS24665-300	. PIN	2	
- 14	R 96-950002-71	. BRACKET,LH.	1	1
	R 96-950002-72	. BRACKET,RH.	1	1
		/ATTACHING PARTS/		
- 15	R AN4C5A	. BOLT.	4	
	R AN960C416	. WASHER.	8	
- 16	R 130909N32	. NUT	6	
- 17	R 58-950000-33	. CLAMP	2	2
- 18	R 96-950013-9	. BRACE,LH.	1	2
- 19	R 96-950013-10	. BRACE,RH.	1	2
		/ATTACHING PARTS/		
- 20	R AN4C6	. BOLT.	2	
	R AN960C416	. WASHER.	2	
	R AN960C416L	. WASHER/UNDER NUT/	1	2
		/ATTACHING PARTS/		
	R 130909N7	. NUT	2	
	R AN381-2-7	. PIN	2	
- 21	R 96-940012-5	. BRACKET	1	2
		/ATTACHING PARTS/		
- 22	R AN4C5A	. BOLT.	2	
	R AN960C416	. WASHER.	4	
	R AN960C416L	. WASHER.	2	
	R MS35335-33	. WASHER.	2	
	R 130909N32	. NUT	2	
- 23	R 130909N32	. NUT	1	2

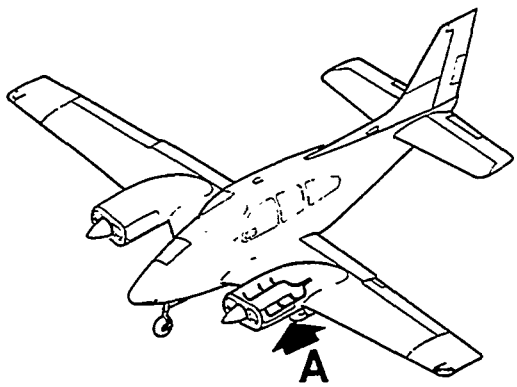

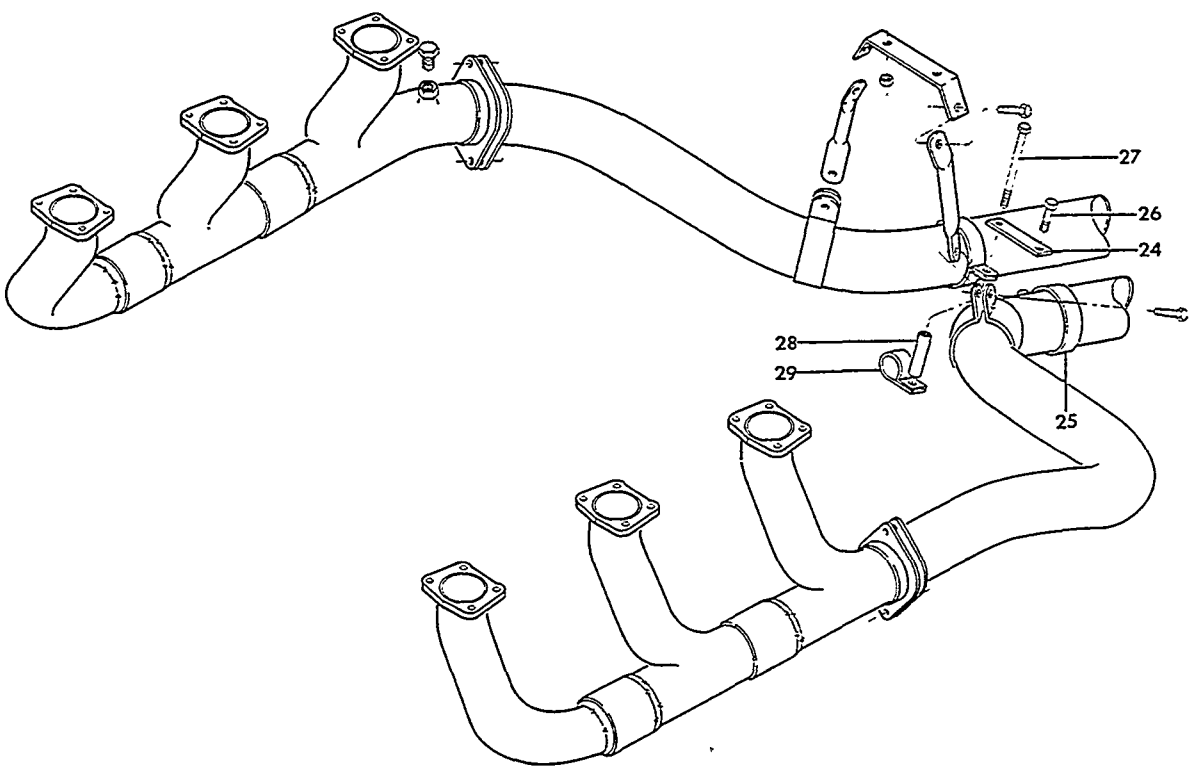

VIEW A

55-245-14

FIGURE 13-01. ENGINE EXHAUST SYSTEM
/SHEET 2 OF 2 SHEETS/

SUB-SECT UNIT & ITEM NO.	PART NO.	DESCRIPTION 1 2 3 4 5 6 7	UNITS PER ASSY	USABLE ON CODE
13-01 - 24	R 96-950004-49	. LINK.	1	
- 25	R TA0310005	. CLAMP	2	
		/ATTACHING PARTS/		
- 26	R 130909B35	. BOLT.	1	
- 27	R AN4-23A	. BOLT.	1	
- 28	R NAS43HT4-96	. SPACER.	1	
	R AN960C416	. WASHER.	1	
	R AN960-416	. WASHER.	1	
	R 130909N32	. NUT	2	
		----*----		
- 29	R 96-910001-87	CLAMP,OIL BREATHER LINE	1	
	R 96-324101-9	INDICATOR INSTL,MIXTURE CONTROL	NP	
	R 96-324101-13	INDICATOR INSTL,MIXTURE CONTROL	NP	
	R 1136B16A	. CONTROL KIT,ALCOR MIXTURE	1	
	R 1136B16AL	. CONTROL KIT,ALCOR MIXTURE/INTERNALLY LIGHTED/	1	
	R A106-16	. . LEAD.	2	
	R A106B	. . PROBE	2	
	R 205-10A	. . INDICATOR	1	
	R 205-10AL	. . INDICATOR/INTERNALLY LIGHTED/	1	

CODES OF EFFECTIVITY

1 TC-1 THRU TC-1607 2 TE-1 THRU TE-937
TE-939 THRU TE-942

CHAPTER

79

OIL

LIST OF PAGES & TABLE OF CONTENTS
FOR
CHAPTER 79-00-00 OIL

CHAP/SUB-SECT & UNIT	PAGE NO.	EFFECTIVE DATE	TABLE OF CONTENTS
79-00-00	1	04/05/85	LIST OF PAGES & TABLE OF CONTENTS
79-00-01	1	04/05/85	ENGINE OIL SYSTEM/REFERENCE/

79-00-01
ENGINE OIL SYSTEM/REFERENCE/
FOR COMPONENTS OF ENGINE OIL SYSTEM ON AIRCRAFT
TE-1 THRU TE-942 & TC-350,REFER TO CONTINENTAL
MOTORS CORP.IO-520 ENGINE SERIES PARTS CATALOG.
FOR AIRCRAFT TC-1 THRU TC-1607 EXCEPT TC-350,
REFER TO CONTINENTAL MOTORS CORP. IO-470
ENGINE SERIES PARTS CATALOG.

"END"

CHAPTER

80

STARTING

LIST OF PAGES & TABLE OF CONTENTS
FOR
CHAPTER 80-00-00 STARTING

CHAP/SUB-SECT & UNIT	PAGE NO.	EFFECTIVE DATE	TABLE OF CONTENTS
80-00-00	1	04/30/84	LIST OF PAGES & TABLE OF CONTENTS
80-10-01	1	03/10/78	STARTER
80-10-01	2	03/10/78	
80-10-01	3	03/10/78	

80-10-01
STARTER

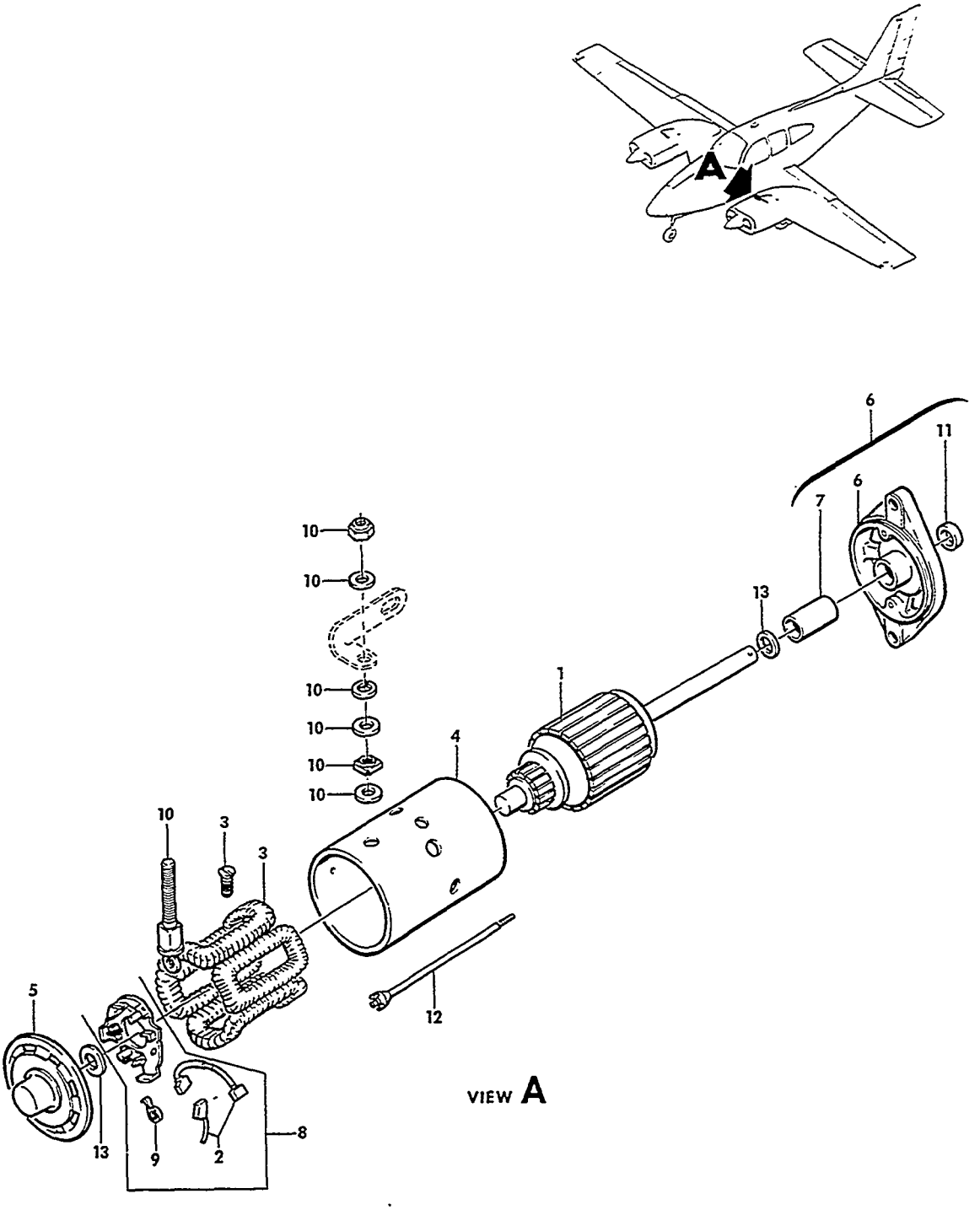

FIGURE 10-01.STARTER

ATA CODE & INDEX NO.	PART NO.	DESCRIPTION 1 2 3 4 5 6 7	UNITS PER ASSY	USABLE ON CODE
10-01	MHJ4002	STARTER ASSY,PRESTOLITE/ALTERNATE FOR 1108234/.	2	
	MHJ4003	STARTER ASSY,PRESTOLITE/ALTERNATE FOR MHJ4002/.	2	
- 1	MHJ2147	. ARMATURE.	1	
- 2	MDL2012E5	. BRUSH SET	1	
- 3	MDL1005FS	. COIL PACKAGE,FIELD.	1	
- 4	MEX2092S	. FRAME AND FIELD ASSY/FOR MHJ4002/	1	
	MEX2092AS	. FRAME AND FIELD ASSY/FOR MHJ4003/	1	
- 5	ML1002	. HEAD ASSY,COMMUTATOR END.	1	
- 6	MCL2136	. HEAD ASSY,DRIVE END/FOR MHJ4002/.	1	
	MCL2136A	. HEAD ASSY,DRIVE END/FOR MHJ4003/.	1	
- 7	ML18A	. BEARING,DRIVE END	1	
- 8	MD1064ES	. PLATE ASSY,BRUSH.	1	
- 9	MZ19S	. SPRING SET,BRUSH.	1	
- 10	P90-842	. STUD PACKAGE,TERMINAL	1	
- 11	XA1024	. SEAL,OIL.	1	
- 12	GJ20DS	. BOLT PACKAGE,THRUST	1	
- 13	P90-2006	. WASHER PACKAGE,THRUST	1	

"END"