Document Number: AFS-BH206L3L4-IBF-KIT-ICA

Revision: D

Date: 25 SEPTEMBER 2013

INSTRUCTIONS FOR CONTINUED AIRWORTHINESS

INLET BARRIER FILTER SYSTEM

for the

Bell Helicopter Textron Canada Limited
Model 206L1/C30, 206L-3, & 206L-4 Helicopters
FAA STC No. SR09421RC

17891 Chesterfield Airport Rd.
Chesterfield, MO 63005

COPYRIGHT© 2004
Aerospace Filtration Systems, Inc.
UNPUBLISHED — ALL RIGHTS RESERVED

LIMITED and/or RESTRICTED RIGHTS NOTICE

This document, along with its drawings and photographs, contains Trade Secrets and/or Commercial or Financial Information that is proprietary to Aerospace Filtration Systems, Inc. (AFS) under 5 USC 552 as amended, and is Prohibited from Public Disclosure by 18 USC 1905. Do not duplicate or disclose outside the U.S. Government without the express written permission of Aerospace Filtration Systems, Inc.

The Government's rights to use, modify, reproduce, release, perform, display, or disclose these technical data are restricted to the purpose of evaluating AFS's design for FAA commercial certification and airworthiness consideration only. Any reproduction of technical data or portions thereof marked with this legend, or referring to this legend, must also reproduce the markings and legend. Any person, other than the Government, who has been provided access to such data must promptly notify: Aerospace Filtration Systems, Inc., Attn: Business Manager, 17891 Chesterfield Airport Rd, Chesterfield, MO 63005

The data subject to this limited/restricted rights notice is contained on all pages.

SIGNATURES

Revision		Name	Signature	Date
Initial Release	Prepared By:	Jay Foster/Roger Wallis	Original Signed By	08-16-04
	Reviewed By:	Daniel Flesher	Original Signed By	08-16-04
	Approved By:	Michael Scimone	Original Signed By	08-16-04
A	Prepared By:	Mark Johnson	Original Signed By	9-19-05
	Reviewed By:	Tom Newman	Original Signed By	9-19-05
	Approved By:	Robert Stenberg	Original Signed By	9-19-05
B	Prepared By:	Mark Johnson	Original Signed By	9-11-08
	Reviewed By:	Roger Wallis	Original Signed By	9-11-08
	Approved By:	Tom Newman	Original Signed By	9-11-08
C	Prepared By:	Gary Heyne	Original Signed By	11 Mar 13
	Reviewed By:	Justin Foster	Original Signed By	11 Mar 13
	Approved By:	Mark Johnson	Original Signed By	11 Mar 13
D	Prepared By:	Gary Heyne		25 Sep 13
	Reviewed By:	Justin Foster		25 Sep 13
	Approved By:	Mark Johnson		25 Sep 13

LOG OF REVISIONS

Revision No.	Revision Description	Release Date
IR	Initial Release	08-16-04
A	Added 206L1/C30 to applicability. Added signatures page	02-02-05
B	Added aircraft with engine upgrade kit 206-706-520 installed per the BHT-206-SI-2050. Removed Special Inspections (3-2.5)	9-11-08
C	Updated Appendix A and figure callouts	11 Mar 13
D	Added Appendix B for Composite Cowl	25 Sep 13

PROPRIETARY DATA STATEMENT

These data, excluding Chapter 4, Airworthiness Limitations, are proprietary to Aerospace Filtration Systems, Inc. Disclosure, reproduction, or use of these data for any purpose other than helicopter operation and/or maintenance is forbidden without prior written authorization from Aerospace Filtration Systems, Inc.

EFFECTIVITY

Effectivity for this ICA is for all Bell model 206L-3, 206L-4, and 206L1/C30* helicopters (*modified IAW Air Services Intl's STC SH296NM for installation of Rolls Royce 250-C30P or with Bell engine upgrade kit 206-706-520 installed per the BHT-206-SI-2050) with the Aerospace Filtration Systems, Inc. (AFS) Inlet Barrier Filter (IBF) System installed.

GENERAL NOTE

Any references or depictions pertaining to the 4-bladed Bell 407 installation in this document are also applicable to the 2-bladed Bell 206L1/C30, 206L-3, 206L-4 installations unless noted otherwise.

Bell 206L1/C30 will be used throughout this document to refer to those aircraft that have had a Rolls Royce 250-C30P installed per STC SH296NM or BHT-206-SI-2050.

Table of Contents

1 INTRODUCTION 1
1.1 SCOPE OF THIS MANUAL 1
1.2 USE OF THIS MANUAL 1
1.3 DEFINITIONS / TERMINOLOGY 1
1.4 ACRONYMS 3
1.5 WARNINGS, CAUTIONS, AND NOTES 3
1.6 UNITS OF MEASURE 4
1.7 REFERENCE PUBLICATIONS 4
1.8 LIST OF APPLICABLE PUBLICATIONS 4
1.9 DISTRIBUTION OF CHANGES 4
1.10 INDICATION OF CHANGES 5
1.11 SYSTEM DESCRIPTION AND OVERVIEW 5
2 AIRWORTHINESS LIMITATIONS 8
2.1 GENERAL 9
2.2 FILTER RETIREMENT LIFE 9
2.1 LIFE LIMITED COMPONENTS 9
3 INSPECTION REQUIREMENTS AND OVERHAUL 10
3.1 INSPECTION REQUIREMENTS 10
3.1.1 GENERAL REQUIREMENTS 10
3.1.2 FILTER ASSEMBLY INSPECTION 10
3.1.3 STRUCTURAL COMPONENT INSPECTIONS 10
3.1.4 SYSTEMS AND ELECTRICAL COMPONENT INSPECTIONS 11
3.1 OVERHAUL REQUIREMENTS 11
4 ACCESS PANELS 12
4.1 GENERAL DESCRIPTION 12
4.2 ACCESS FOR FILTER SERVICING 12
4.3 ACCESS FOR MAINTENANCE 12
4.3.1 ACCESS ABOVE BYPASS FLOOR ASSEMBLY 12
4.3.2 ACCESS BELOW BYPASS FLOOR ASSEMBLY 12
5 STORAGE 14
5.1 STORAGE 14
6 PLACARDS, DATA PLATES, AND MARKINGS 15
6.1 MARKING – Part Number / PMA / Serialization 15
6.2 DATA PLATE – FILTER ASSEMBLY 15
6.3 PLACARDS / MARKINGS - Cockpit 15
7 SERVICING 16
7.1 AUTHORIZED MATERIALS 16
7.2 FILTER SERVICE INTERVALS 16
7.2.1 GENERAL REQUIREMENTS 16
7.2.2 PREPARED FIELD OPERATIONS 17
7.2.3 SEVERE ENVIRONMENT OPERATIONS 17
7.3 FILTER ASSEMBLY SERVICING 17
7.3.1 FILTER PRE-CLEANING 17
7.3.2 FILTER CLEANING 18

7.3.3 FILTER DRYING 19
7.3.4 FILTER OILING 19
7.4 STRUCTURAL COMPONENT SERVICING 20
7.5 SYSTEMS AND ELECTRICAL SERVICING 20
7.6 ENGINE WATER WASH 20
7.7 AIRCRAFT WASHING 21
8 TROUBLESHOOTING AND MAINTENANCE 22
8.1 MAINTENANCE GENERAL 22
8.2 COMPONENTS - GENERAL DESCRIPTION 23
8.2.1 FILTER ASSY / ENGINE WASH TUBE ASSY / FILTER SEAL 23
8.2.2 STRUCTURAL COMPONENTS 23
8.2.3 SYSTEMS AND ELECTRICAL COMPONENTS 23
8.3 FILTER ASSY / ENGINE WASH TUBE ASSY / FILTER SEAL 24
8.3.1 FILTER ASSY / ENGINE WASH TUBE ASSY 24
8.3.2 FILTER SEAL 29
8.4 STRUCTURAL COMPONENTS 30
8.4.1 BELL 206L1/C30, 206L-3, & 206L-4 AIR INLET COWL ASSEMBLY 30
8.4.2 BYPASS FLOOR ASSEMBLY 31
8.4.3 BYPASS DOOR 33
8.4.4 BYPASS DOOR SEAL 35
8.4.5 FILTER FRAME ADAPTER 36
8.4.6 ACCESS DOOR / SEAL 37
8.5 SYSTEMS AND ELECTRICAL COMPONENTS 38
8.5.1 COCKPIT SWITCH / INDICATOR 38
8.5.2 DIFFERENTIAL PRESSURE SWITCH 40
8.5.3 FILTER MAINTENANCE AID 43
8.5.4 ACTUATOR 45
8.5.5 WIRING, WIRING HARNESS, CONNECTORS, BACKSHELLS, CIRCUIT BREAKER, RELAY 49
8.6 FASTENER LISTING 49
8.7 PROTECTIVE TREATMENT 50
8.8 TROUBLESHOOTING GUIDE 52
8.9 SPECIAL TOOLS / SPECIAL EQUIPMENT 53
8.10 CONSUMABLE MATERIALS, SUPPLIES, AND PROTECTIVE TREATMENT SPECIFICATIONS 53
ICA APPENDIX 54

1 INTRODUCTION

1.1 SCOPE OF THIS MANUAL

These Instructions for Continued Airworthiness (ICA) provide the information required to do the maintenance and repair of the AFS Inlet Barrier Filter (IBF) system installation on the Bell Helicopter Textron Canada Limited (BHTC) Model 206L1/C30, 206L-3, & 206L-4 helicopters. The ICA should be used in conjunction with all pertinent BHTC Model 206L1/C30, 206L-3, & 206L-4 manuals and all publications listed in the List of Applicable Publications (LOAP).

NOTE

Thoroughly review and become familiar with the applicable Appendix (A or B) – Parts Figures section of this ICA before performing maintenance on the IBF system.

NOTE

Any references or depictions pertaining to the 4-bladed Bell 407 installation in this document are also applicable to the 2-bladed Bell 206L1/C30, 206L-3, and 206L-4 installations unless noted otherwise.

1.2 USE OF THIS MANUAL

The instructions that are given in this manual and those that have been changed by revisions, bulletins and/or alerts issued by Aerospace Filtration Systems, Inc. (AFS), BHTC or the Airworthiness Directives issued by the local Aviation Authority, shall be strictly followed.

1.3 DEFINITIONS / TERMINOLOGY

Access door	Allows access to the components mounted below the Bypass Floor Assembly.
Actuator	An electromechanical actuator used to open / close the bypass door.
Air induction screen	Screen installed in the engine inlet on baseline configuration aircraft in lieu of the EAPS or the IBF, to prevent engine foreign object damage.
Air induction cowling	This cowling houses the major kit components including the IBF filter assembly, adaptor frame, bypass floor assembly, associated wiring and, if elected the access door option as shown in Figure 1-1.
Brownout	A brownout condition is a zero visibility condition usually caused by hovering in a dusty environment.
Bypass	The bypass is an alternate air inlet used only when the main engine air inlet through the filter becomes clogged or blocked.

Bypass door	Door located in the Bypass Floor Assembly just aft of the filter that when opened by the actuator allows unfiltered air for the engine to be drawn from the aircraft transmission bay.
Bypass floor assembly	This floor is located just aft of the filter assembly and forward of the engine inlet/firewall that seals the bottom of the inlet plenum chamber. Mounted on the floor are the bypass door, actuator, filter maintenance aid, and differential pressure switch.
Cockpit switch / indicator	Combination switch/indicator that appears as a square black button located on cockpit instrument panel within easy reach of the pilot and labeled “IBF”. The switch is used to activate the actuator by depressing the button once to open the bypass door and depressing it a second time to close the bypass door. The button also serves as a dual indicator. Normally black, the top half of the button illuminates an amber caution “FILTER” light any time the differential pressure reaches or exceeds a preset limit, and the bottom half displays an amber caution “BYPASS” light when the bypass door reaches the full open position.
Differential pressure	Drop in pressure across the filter assembly, which is measured by the differential pressure switch and the filter maintenance aid.
Filter	Barrier type filter media made of multi-layers of cotton gauze saturated with specially formulated oil that forms a tack barrier that increases the capture efficiency of the filter.
Filter assembly	Filter media supported by pleated stainless steel screen on both sides and the filter assembly frame components around the perimeter of the filter media.
Filter assembly frame	Structure that frames, retains, and seals the outside edges of the filter media.
Filter downstream side	Clean side of the filter media (i.e. the side of the filter facing aft)
Filter media	Multi-layered cotton gauze compressed between two layers of pleated stainless steel screen and saturated with specially formulated oil which allows the air to pass through with a very low drop in pressure but traps a high percentage of the dust/dirt particles.
Filter pleats	Stainless steel screen is used to form the pleats and hold the filter media in place
Filter upstream side	Dirty side of the filter media (i.e. the side facing forward into the air stream on which the dirt collects).
Inches of water	Unit of measure used for the differential pressure measured across the filter, as measured with a water manometer or similar apparatus.
IML covers	Inner mold line covers used to block off the hole left on the inner skin of the Air Induction Cowling when the EAPS exhaust duct is removed.

Oiling	Process used to apply a uniform amount of oil on filter media.
OML covers	Outer mold line covers used to block off the hole left on the outer skin of the Air Induction Cowling when the EAPS exhaust duct is removed.
On-condition	Indicates that servicing of the filter is based on a Filter Maintenance Aid (FMA) indication in the area marked in “RED”, Power Assurance Check (PAC) results (where a failed PAC is the result of a dirty Filter Assembly), and / or any “FILTER” light indication on the cockpit switch / indicator.
Plenum chamber	Space between the filter assembly and the engine inlet / firewall (fore and aft, respectively), and between the Air Induction Cowling and bypass floor assembly (top and bottom, respectively).
Service cycle	Period starting when a filter is cleaned, oiled and placed into service and ending when the filter is removed for its next cleaning and oiling.

1.4 ACRONYMS

AFS = Aerospace Filtration Systems, Inc.
ATA = Air Transport Association of America, Inc.
BHTC = Bell Helicopter Textron Canada Limited
EAPS = Engine Air Particle Separator
FAR = Federal Aviation Regulation
FMA = Filter Maintenance Aid
FMS = Flight Manual Supplement
FOD = Foreign Object Damage
IBF = Inlet Barrier Filter
ICA = Instructions for Continued Airworthiness
IML = Inner Mold Line
IP = Installation Procedures
IPB = Illustrated Parts Breakdown
LOAP = List of Applicable Publications
MGT = Measured Gas Temperature
OAT = Outside Air Temperature
OML = Outer Mold Line
PAC = Power Assurance Check
RFM = Rotorcraft Flight Manual
SAE = Society of Automotive Engineers
TCDS = Type Certificate Data Sheet
TIS = Time In Service

1.5 WARNINGS, CAUTIONS, AND NOTES

Warning, cautions and notes are used throughout this manual to emphasize important and critical instructions.

WARNING

IF YOU DO NOT FOLLOW THE INSTRUCTIONS THAT ARE GIVEN IN A WARNING, PERSONAL INJURY CAN OCCUR.

CAUTION

IF YOU DO NOT FOLLOW THE INSTRUCTIONS THAT ARE GIVEN IN A CAUTION, YOU CAN CAUSE DAMAGE TO THE HELICOPTER OR TO THE COMPONENTS.

NOTE

A note includes supplemental data about the procedure, the practice, the condition, etc. for the maintenance task.

1.6 UNITS OF MEASURE

U.S. Standard units of measure have been used in preparation of this manual. Typical units used in this manual include: inches of water measuring differential pressure, inch-pounds of torque, etc.

1.7 REFERENCE PUBLICATIONS

Reserved for future use.

1.8 LIST OF APPLICABLE PUBLICATIONS

Bell Helicopter Textron
206L-1, 206L-3, & 206L-4 Series Technical Publications

FAA
FAA Advisory Circular, AC 43.13-1B, Acceptable Methods, Techniques, and Practices – Aircraft Inspection and Repair

1.9 DISTRIBUTION OF CHANGES

Changes shall be distributed by posting them on the AFS webpage www.donaldsonaerospace-defense.com. Each customer will be registered and provided access to the webpage via a personalized log-in/password established at the time of kit purchase.

NOTE

This webpage should be checked prior to the performance of any maintenance actions on the IBF system to confirm possession of the latest FAA approved revision. If access to the internet is not possible, contact AFS at (636) 300-5200 for assistance.

1.10 INDICATION OF CHANGES

All changes will be complete revisions with all pages marked with the latest revision letter.

1.11 SYSTEM DESCRIPTION AND OVERVIEW

a. The Bell 206L1/C30, 206L-3, & 206L-4 IBF systems are offered to operators in two kits; AFS Kit No. 106000-105 (for metal cowl) and AFS Kit No. 106000-111 (for composite cowl), each includes the Inlet Barrier Filter (IBF) system and a quick access door.

b. The IBF provides a single forward-facing barrier type filter assembly just aft of the aircraft's bifurcated engine air inlet system in the same location and in lieu of the Engine Air Particle Separator (EAPS) or Air Induction Screen. The IBF installation on the 206L-3 & 206L-4 requires no structural modifications to the existing Air Induction Cowling except for the installation of the access door. The IBF installation on the 206L1/C30 requires addition of Bell parts 206-064-819-123S, -135S, -136S, -137S, -131S, -113S, and -091S be installed into the cowling to enable the attachment of the IBF system. The access door has been added on the right side of the Air Induction Cowling to allow the operator quick access to the filter for servicing, which is especially helpful during extensive desert type operations. The IBF provides aircraft owner/operators a high performance engine air filtration option that significantly improves filtration efficiency over the EAPS. The IBF will increase the life of the engine through a dramatic reduction in erosion resulting from the substantial increase in filtration efficiency without degrading engine performance. The AFS IBF system provides dust separation efficiencies exceeding 99% for Society of Automotive Engineers (SAE) AC Coarse and AC Fine dust as defined in specification SAE J726, Air Cleaner Test Code.

c. On the Bell 206L-3 & 206L-4, the IBF system does not interfere with any of the commercial items installed in the production aircraft. On the Bell 206L1/C30, the same statement is applicable after the modifications have been made in accordance with Air Services Intl's STC SH296NM or Bell BHT-206-SI-2050 for installation of Rolls Royce 250-C30P engine. The IBF is a complete system in which safety, functionality and serviceability were major considerations in the design process. The major kit components include the filter assembly, cockpit switch/indicator, engine wash tube assembly, bypass floor assembly (which includes the bypass door assembly, actuator, differential pressure switch, and filter maintenance aid), wiring harness, and access panel. Figure 1, located at the end of this chapter, provides an exploded view of the major kit components with the exception of the cockpit switch/indicator and wiring harness. For a detailed illustration of all kit components, see the Appendix A or B - Parts Figures.

d. The major components making up the bypass system include the bypass door, actuator, wiring harness, cockpit switch/indicator, and differential pressure switch. The cockpit switch/indicator actually serves three functions: (1) a push button switch to energize the actuator to open/close the bypass door, (2) the top half of the button illuminates the word "FILTER" in amber any time the preset differential pressure limit is reached or exceeded, and (3) the bottom half illuminates the word "BYPASS" in amber when the bypass door reaches the full open position. The cockpit switch / indicator is also wired into the cockpit panel press-to-test system, and the aircraft lighting dimmer system.

e. The IBF system provides a means of monitoring the condition of the filter both in-flight and on the ground, and a bypass capability should flow through the filter become restricted. In-flight, a differential pressure switch continuously measures the drop in pressure across the filter, and triggers the cockpit switch/indicator displaying "FILTER" cautioning the pilot any time the differential pressure across the filter reaches or exceeds a preset limit. At this point, the IBF is operating at approximately the same inlet differential pressure normally experienced with the EAPS installed. The electromechanically actuated bypass door permits unfiltered air to enter the engine inlet plenum chamber should the filter media

become obstructed, and can be opened or closed as required. On the ground, a Filter Maintenance Aid, mounted under the bypass floor assembly, displays the maximum differential pressure across the filter reached during the last flight. It is accessible only on the ground, providing the pilot or mechanic the ability to visually gauge the current condition of the filter. This gives the mechanic the ability to forecast the timing of the next service cycle. The Filter Maintenance Aid can be reset by depressing the yellow button marked “PUSH TO RESET” located on the end of the Filter Maintenance Aid.

f. The design of the bypass system allows the ground crew to cycle the bypass door with power on the aircraft. The switch can be depressed to actuate the bypass door open, and then depressed again to actuate it closed. Full functional verification of the bypass system including all electromechanical components and the filter maintenance aid is possible during routine maintenance (see Chapter 8).

g. Removal of the filter assembly for servicing is easily achieved by removal of seven fasteners, which are accessible through the engine air inlets, and then removal of the filter assembly through the access door on the right side of the Air Induction Cowling.

h. The nozzle on the engine water wash tube assembly provides the equivalent engine wash capability as currently provided by similar nozzles mounted on the EAPS and Air Induction Screen installations.

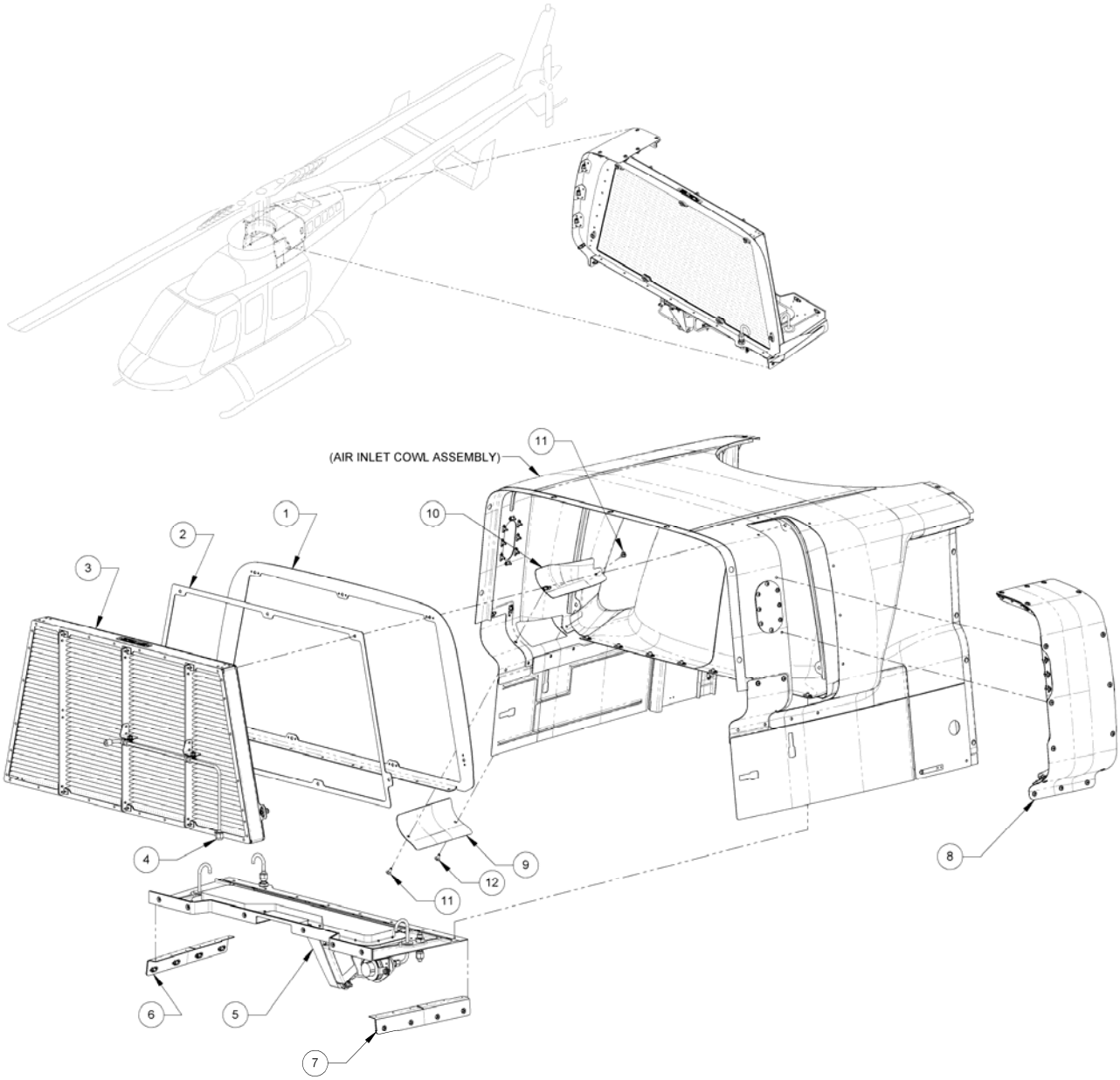

Figure 1: IBF System and Access Door Installation

ITEM NO.	ITEM NAME
1	Adapter Frame Assembly
2	Filter Seal
3	Inlet Barrier Filter Assembly
4	Engine Wash Tube Assembly
5	Bypass Floor Assembly
6	Floor Closeout Angle Assembly (LH)
7	Floor Closeout Angle Assembly (RH)
8	Filter Access Door Installation
9	OML EAPS Ejector Cover
10	IML EAPS Ejector Cover Assembly
11	Screw
12	Screw

2 AIRWORTHINESS LIMITATIONS

AIRWORTHINESS LIMITATIONS

FAA APPROVAL BLOCK

The Airworthiness Limitations Section is FAA approved and specifies maintenance required under Secs. 43.16 and 91.403 of the Federal Aviation Regulations unless an alternative program has been FAA approved.

Revision	Date of FAA Signature	FAA Signature
Initial Release	8/25/04	Original Signed By: Efrain E. Esparza
A	9/19/05	Original Signed By: Efrain E. Esparza
B	This revision does not affect the airworthiness limitations	
C	5/7/2013	Chris Richards
D	OCT 21 2013	

2.1 GENERAL

The Airworthiness Limitations for the AFS Inlet Barrier Filtration system (IBF) as installed on Bell Helicopter Textron Canada Limited model 206L1/C30, 206L-3, & 206L-4 helicopters are FAA approved.

NOTE

The retirement life given or the failure to give a retirement life to a component does not constitute a warranty of any kind. The only warranty applicable to any component is the warranty included in the Purchase Agreement for the helicopter or the component.

2.2 FILTER RETIREMENT LIFE

After fifteen (15) cleaning and oiling cycles, the filter must be removed from service at the next servicing interval. The filter data tag is scribed after each cleaning and oiling cycle (see Paragraph 6-2). When all numerals (1-15) on the data tag have been scribed out, the filter shall be removed from service at the next service interval. No further cleaning cycles are authorized.

2.1 LIFE LIMITED COMPONENTS

There are no fatigue life limited components on the IBF System. The only life limited component is the filter assembly. See Paragraph 2.2.

3 INSPECTION REQUIREMENTS AND OVERHAUL

3.1 INSPECTION REQUIREMENTS

3.1.1 GENERAL REQUIREMENTS

a. Inspection of the IBF system consists of, in general terms, inspection of the filter assembly, inspection of the structural components, inspection of electrical and system components, and a special inspection at three specified points based on hours after initial installation. The components of the system are divided, generally as a scope of work, into Filter Assembly / Seal, Structural Components, and Systems and Electrical components as is done throughout the manual.

b. Refer to the Appendix A – For Bell 206L1/C30, 206L-3, & 206L-4 with metal cowing parts for component illustrations that provide supplemental information relative to proper assembly configuration, orientation, and locations for all components to be inspected per Chapter 3 and Table 1. Refer to Appendix A, for Kit No. 106000-105.

c. Refer to the Appendix B – For Bell 206L1/C30, 206L-3, & 206L-4 with composite cowing parts for component illustrations that provide supplemental information relative to proper assembly configuration, orientation, and locations for all components to be inspected per Chapter 3 and Table 1. Refer to Appendix A, for Kit No. 106000-111.

d. Table 3-1 gives a recommended inspection schedule for the components of the system. The Trouble-Shooting Guide, Table 8-1 found near the end of Chapter 8, also gives additional guidance when performing inspections and encountering trouble with the system. Chapter 8 also provides specific inspection guidance and removal/installation procedures for each component and is structured in the same three major groups as discussed above.

3.1.2 FILTER ASSEMBLY INSPECTION

a. The following inspections pertain to the barrier filter assembly and associated components, which include the filter assembly (i.e. filter frame and filter media), engine wash tube assembly, and all associated seals/fasteners.

b. <u>ON-CONDITION UP TO TIS LIMIT</u>: Any FMA indication in the “RED”, “FILTER” light indication of the IBF cockpit switch / indicator or failed PAC requires a conditional inspection in accordance with Table 1.

c. <u>VISUAL</u>: All filter assembly components (including engine wash tube assembly, seals and fasteners) are to be visually inspected at every annual in accordance with Table 1 checking for the following: filter media for tears, punctures, uneven or damaged pleats; seals for tears/damage; frame components for corrosion, cracks, distortions near holes, and check for missing or damaged fasteners.

3.1.3 STRUCTURAL COMPONENT INSPECTIONS

<u>VISUAL</u>: All structural IBF components are to be inspected in accordance with Table 3-1 every 100 hours and annual. These components include the following: Bell 206L1/C30, 206L-3, & 206L-4 Air Induction Cowling (OEM Equipment), Access Door, Adapter Frame Assembly, Bypass Floor Assembly, OML / IML Covers, and Close out Angles.

3.1.4 SYSTEMS AND ELECTRICAL COMPONENT INSPECTIONS

a. VISUAL: The systems and electrical components are to be visually inspected in accordance with Table 3-1 every 100 hours and annual. These components include the following: Wiring, Wiring Harness, Connectors, Backshells, Circuit Breaker, Cockpit Switch / Indicator, Differential Pressure Switch, Filter Maintenance Aid, and Actuator.

b. FUNCTION CHECK: Certain systems and electrical components are also to be function checked in accordance with Table 3-1 every 100 hours and annual. These components include the following: Circuit Breaker, Cockpit Switch / Indicator, Differential Pressure Switch, Filter Maintenance Aid, and Actuator.

Table 1: Inspection Intervals

Components	Inspection Type	Inspection	Inspection Intervals			
			Scheduled		Time In Service	Notes
			100 Hrs.	Annual		
Filter Assembly as defined in para. 3-1.2.	Conditional	1. On-Condition up to TIS Limit			300 hrs / 1 yr	2, 3, 4, 5, 8
	Scheduled	2. Visual		X		1, 2, 4, 7, 8
Structural Components as defined in para. 3-1.3.	Scheduled	1. Visual	X	X		1, 2, 4, 7
Systems and Electrical Components as defined in para. 3-1.4.	Scheduled	1. Visual	X	X		1, 2, 4, 7
	Scheduled	2. Function Check	X	X		1, 2, 4, 5

Notes.
1. Refer to Chapter 8 for specific inspection requirements and functional check procedures.
2. Refer to Chapter 4 (Figure 4-1) for access information.
3. FILTER light or failed PAC. This inspection is required any time a FILTER light indication or failed PAC is reported by the pilot.
4. Reference Appendix A - Parts Figures.
5. Reference Trouble-Shooting Guide, Table 8-2 of this manual.
6. Removed
7. Perform a visual inspection checking for deformation, buckling, corrosion, cracks, dents, tears, or other signs of damage and repair in accordance with the procedures in Chapter 8.
8. The maximum filter service interval between cleanings under any conditions is 300 flight hours or 1 year TIS, whichever comes first. Up to the TIS limit, the inspection of the Filter Assembly is “On-Condition” based on an FMA indication in the “RED”, any “FILTER” light indication on the Cockpit Switch / Indicator, and / or upon a failed PAC (where the failed PAC is the result of a dirty Filter Assembly).

3.1 OVERHAUL REQUIREMENTS

There are no overhaul intervals or requirements applicable to this product at this time.

4 ACCESS PANELS

4.1 GENERAL DESCRIPTION

This chapter addresses how to access the IBF system installation for servicing or maintenance.

4.2 ACCESS FOR FILTER SERVICING

Access for removal/installation of the filter assembly for filter servicing requires removal of the access door (Figure 2, Item B) when AFS IBF Kit No. 106000-105 or 106000-111 is installed. See Chapter 8 for filter assembly removal/installation procedures and Chapter 7 for filter servicing procedures.

4.3 ACCESS FOR MAINTENANCE

4.3.1 ACCESS ABOVE BYPASS FLOOR ASSEMBLY

Access for maintenance of the system components located above the bypass floor assembly (i.e. filter assembly, engine water wash tube assembly, filter frame adaptor, bypass door, etc.), when AFS IBF Kit No. 106000-105 or 106000-111 is installed, requires removal of the access door (Figure 2, Item B). See Chapter 8 for component removal/installation procedures, inspection, troubleshooting guide, adjustment/calibration/repair procedures.

4.3.2 ACCESS BELOW BYPASS FLOOR ASSEMBLY

Access for maintenance of components located below the bypass floor assembly (i.e. filter maintenance aid, pressure differential switch, actuator, wiring harness/connectors) requires opening the RH access door (Figure 2, Item C) and the LH access door (located in the same location on the opposite side of the aircraft).

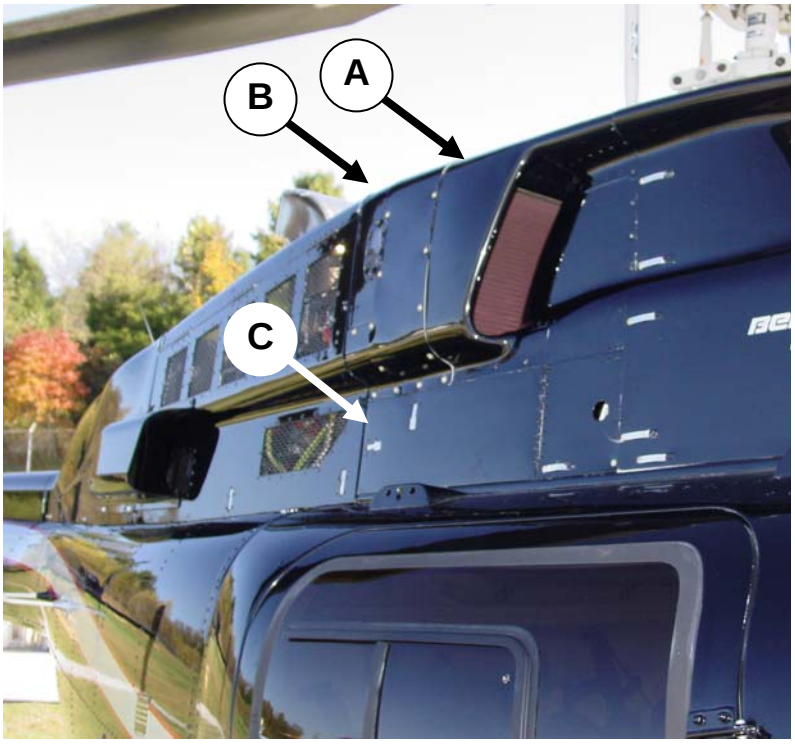

Figure 2: Equipment Locations
Locations of (A) Air Inlet Cowl Assembly,
(B) IBF Access Door and (C) RH Access Door
[Photo (above) & Line drawing (below)]

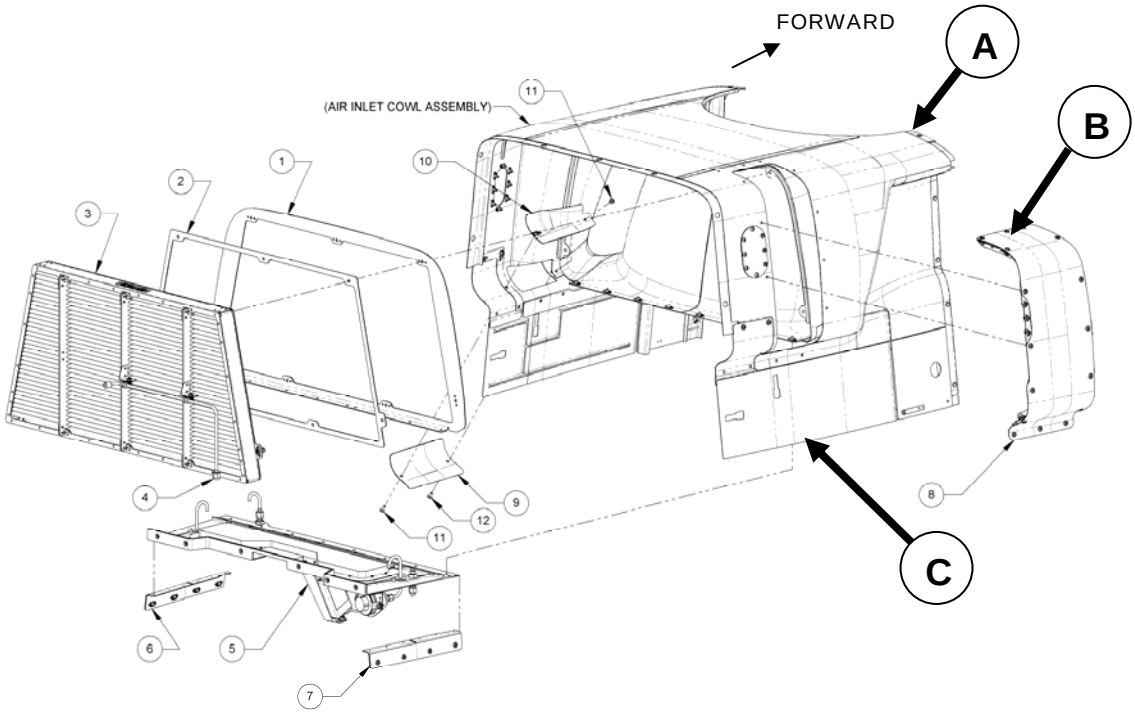

5 STORAGE

5.1 STORAGE

CAUTION

NEVER INSTALL A FILTER ASSEMBLY AND/OR OPERATE AN AIRCRAFT WITH A FILTER INSTALLED WHERE THE FILTER MEDIA HAS NOT BEEN PROPERLY OILED.

Long-term storage has no effect on filter assembly reliability if stored unoiled (dry) in a cool, dry location to discourage possible fungus growth. After storage, the only maintenance to be performed on the filter before installation on the aircraft shall be oiling of the filter media. Refer to filter servicing Paragraph 7-3.

6 PLACARDS, DATA PLATES, AND MARKINGS

6.1 MARKING – Part Number / PMA / Serialization

The IBF system is marked on the floor assembly to contain the top level part number, the serial number of the system, and the FAA PMA markings, if applicable.

6.2 DATA PLATE – FILTER ASSEMBLY

After the filter assembly has been serviced an “X” is marked through one of the unmarked boxes on the serviceability tag. When the last unmarked box is crossed through the filter assembly will have to be replaced at the next servicing. See Chapter 7 for servicing procedures.

Figure 3: Example of Filter Assembly Data Plate

6.3 PLACARDS / MARKINGS - Cockpit

a. The area on the instrument panel just above or below the cockpit switch / indicator is marked “IBF”. The actual cockpit switch / indicator is internally lit to display amber cautions marked “FILTER” and “BYPASS”. See Figure (A) below for marking and for location.

(A)

(B)

Figure 4: IBF Markings
(A) Cockpit Switch/Indicator & (B) Circuit Breaker

b. The IBF circuit breaker in the overhead console is marked ”IBF”. See Figure (B) above for marking and for location.

7 SERVICING

7.1 AUTHORIZED MATERIALS

Service AFS Filter Assembly only with AFS Air Filter Oil, (14 oz. squeeze bottle – AFS P/N 100100-014, gallon container – AFS P/N 100101-000), AFS Air Filter Cleaner (gallon container – AFS P/N 100201-000, 5 gallon container – AFS P/N 100205-000) or AFS authorized substitutes.

NOTE

Refer to Chapter 8 for removal, inspection, repair and installation of filter assembly. Upon satisfactory inspection and any required maintenance of the filter assembly proceed with the rest of the servicing instructions for the filter assembly.

7.2 FILTER SERVICE INTERVALS

The filter service interval is based on the specific aircraft operating environment. The filter service intervals section is broken up in three parts: general requirements pertaining to all operations, specific recommendations for operations on prepared fields, and for operations in severe environments.

7.2.1 GENERAL REQUIREMENTS

NOTE

The maximum filter service interval between cleanings under any conditions is 300 flight hours or 1 year TIS, whichever comes first. Up to the TIS limit, the filter is considered an "on-condition" item.

NOTE

The FMA is an aid to help maintenance personnel and pilots to ascertain the condition of the filter at any point in time or to trend the accumulation of dirt on the Filter Assembly over a period of time.

a. Up to the 300 hour / 1 year TIS limit, the "on condition" requirement for servicing the Filter Assembly is based on a FMA indication, a "Filter" light indication on the Cockpit Switch / Indicator, or upon a failed PAC (where the failed PAC is the result of a dirty Filter Assembly).

b. Any "FILTER" indication, where the pressure sensor and indicating system are working properly, requires servicing of the filter assembly. See filter servicing Paragraph 7-3.

c. The gradual increase in differential pressure across the IBF filter assembly causes an increase in the measured gas temperature (MGT) required to produce a specified torque as measured during the PAC. A failed PAC due to an increase in differential pressure across the filter is cause for servicing of the filter assembly. See filter servicing Paragraph 7-3.

d. Any FMA indication in the area marked in "RED" requires servicing of the filter assembly. See filter servicing Paragraph 7-3.

e. At any time prior to a “FILTER” indication on the cockpit switch / indicator, an FMA indication in the “RED”, or a failed PAC, when maintenance or flight personnel see a trend on the FMA that would warrant servicing of the filter due to operational considerations, such as when the aircraft will be operating in a remote or off-site location without the ability to readily service the filter, the filter may be serviced, or replaced. See filter servicing Paragraph 7.3.

f. The maximum number of service cycles for the filter assembly (i.e., cleaning / oiling) is limited to 15 for each filter assembly. The filter assembly includes a data plate that must be scribed to track filter service cycles in accordance with Paragraph 6.2.

7.2.2 PREPARED FIELD OPERATIONS

a. During typical operations in and out of prepared airfields and landing sites, the IBF filter assembly will not require frequent servicing. AFS recommends that the filter maintenance aid (FMA) be checked about every 25 aircraft operating hours following the first installation and operation of an IBF system on an aircraft. This should be done to gauge the rate of engine performance degradation due to changes in engine inlet differential pressure as the filters accumulate dirt in operations considered “prepared fields” operations. Once an interval of time in flight hours is determined that provided discrete changes in the FMA, this interval can be repeated as long as there is no change in the environmental operating conditions.

b. Ensure all filter servicing requirements defined in Paragraph 7.2.1 are followed. Refer to Paragraph 7.3 for servicing of the filter assembly.

7.2.3 SEVERE ENVIRONMENT OPERATIONS

a. When operating in an environment of high sand and dust levels, frequent servicing of the filter assembly may be required based on the time exposure and severity of the environment. Any operations in an environment that can result in “brownout” conditions should therefore be minimized or avoided to the maximum extent possible within the constraints of the operation. If extended time is accumulated operating in brownout conditions, monitoring of the FMA between shut down and startup will give an indication of the differential pressure trend based on the severe environment being flown in. Once an interval of time in flight hours is determined that provided discrete changes in the FMA, this interval can be repeated as long as the initial readings remain typical of the current operations.

b. Ensure all filter servicing requirements defined in Paragraph 7-2.1 are followed. Refer to Paragraph 7-3 for servicing of the filter assembly.

7.3 FILTER ASSEMBLY SERVICING

The filter assembly servicing section defines the procedures for pre-cleaning, cleaning, drying, and oiling the filter media in the filter assembly.

7.3.1 FILTER PRE-CLEANING

a. Servicing of the filter assembly is determined by the inspection requirements found in Chapter 3.

b. Prior to any cleaning operation gently brush the dirty side of the filter with a soft bristle brush similar to a soft paintbrush. Remove as much debris as practical from the filter before proceeding to the cleaning procedure.

7.3.2 FILTER CLEANING

CAUTION

DO NOT CLEAN AFS FILTER ASSEMLBIES WITH GASOLINE, SOLVENTS, PARTS CLEANERS, STRONG DETERGENTS, OR CAUSTIC CLEANING SOLUTIONS.

CAUTION

DO NOT STEAM CLEAN OR USE HIGH-PRESSURE WASHERS TO CLEAN THE AFS FILTER ASSEMBLY.

CAUTION

ANY OF THESE PROCESSES WILL DAMAGE FILTER MEDIA AND/OR THE FILTER FRAMES.

CAUTION

USE ONLY AFS CLEANER OR AN AFS APPROVED SUBSTITUTE.

a. Spray AFS Air Filter Cleaner liberally onto the entire filter media (both sides) until the filter media is thoroughly soaked. If procured in bulk, transfer a smaller quantity to a spray bottle. A spray bottle provides a more uniform distribution of the cleaning agent.

b. Let the cleaner soak into the contaminants and filter media for 10 minutes.

c. Rinse the filter with low-pressure water. Use water out of a faucet or hose (without nozzle). Rinse in the opposite the direction of airflow, i.e., from the clean side to the dirty side. Arrange the filter so the pleats are vertical, and begin to rinse in a gradual side-to-side motion starting at the top and working downward. Adjust the pace to correspond with the cleanliness of the water runoff. As long as the runoff is filled with debris and oil, do not proceed downward.

d. Upon completion, adjust the filter to clean from the dirty side to the clean side, pleats still vertical.

e. Repeat the rinsing procedure once again, until there is no visible debris on the surface and the runoff water is relatively clean.

f. When finished, flip the filter once again and repeat the rinse from clean side to dirty side.

g. Finally, rotate the filter from top to bottom, and perform the final rinse until the runoff water is free of all debris and oil.

7.3.3 FILTER DRYING

CAUTION

DO NOT USE COMPRESSED AIR TO DRY THE FILTER ASSEMBLY. IT MAY DAMAGE THE FILTER MEDIA.

CAUTION

DO NOT USE HEAT FROM ANY SOURCE TO DRY THE AFS FILTER ASSEMBLY. HEAT MAY SHRINK THE FILTER MEDIA AND MAY DAMAGE THE CORING MATERIAL WITHIN THE FILTER FRAMES.

a. After rinsing, shake off the excess water and let the Filter Assembly dry at room or outside air temperature (above freezing).

b. Ensure dirt or debris does not enter or contact the Filter Assembly while drying.

c. After the Filter Assembly dries, mark the service cycle on data plate in accordance with the Paragraph 6-2.

7.3.4 FILTER OILING

CAUTION

NEVER PUT AN AFS FILTER ASSEMBLY IN SERVICE WITHOUT OILING IT.

CAUTION

USE ONLY AFS FILTER OIL OR AN AFS APPROVED SUBSTITUTE.

NOTE

A squeeze bottle capable of accurately measuring out fourteen (14) fluid ounces should be used when applying the oil to the filter as directed below.

a. The filter will not function properly if other types of oil are used. AFS Air Filter Oil is a unique blend of mineral and organic oil base stocks and special polymers that form a very efficient “tack barrier.” Red dye is added to show areas of oil application. Do not use transmission fluid, any kind of motor oil, or diesel fuel to oil the AFS filter. Do not use “WD-40,” “LPS,” or any other type of lightweight spray lubricants to oil the AFS filter. Any of those products will damage the filter or degrade its filtering ability. A squeeze bottle allows for the controlled application of a specific amount of oil to the filter (See Figure 5).

b. Apply approximately ¾ of the fourteen (14) fluid ounces that is to be applied to the clean, dried Filter Assembly. Gently squeeze a small stream of oil along the entire length of each pleat peak, then flip the filter over and repeat this on the backside. Apply sparingly to ensure coverage of the entire filter.

c. Let the Filter Assembly sit for 20 minutes as the oil “wicks” into the surrounding filter media. Apply the remaining filter oil to any areas that are still white and to complete the application of the 14 fluid ounces from the squeeze bottle.

Figure 5: Oiling Filter Media

7.4 STRUCTURAL COMPONENT SERVICING

There are no structural components requiring periodic servicing. See Chapter 6 for inspection requirements and Chapter 8 for maintenance requirements.

7.5 SYSTEMS AND ELECTRICAL SERVICING

There are no system and electrical components requiring periodic servicing. See Chapter 6 for inspection requirements and Chapter 8 for maintenance requirements.

NOTE

The Filter Maintenance Aid is designed to hold the highest differential pressure across the filter assembly reached during the last flight, and should be reset after servicing of the filter assembly by depressing the yellow button marked “PUSH TO RESET” located on the end of the filter maintenance aid (See Figure 10).

7.6 ENGINE WATER WASH

NOTE

It is not necessary to remove the IBF filter prior to conducting an engine wash.

It is recommended the engine water wash frequency be in accordance with the current Rolls-Royce requirements for operation in a standard environment, desert environment or salt-water environment.

7.7 AIRCRAFT WASHING

During aircraft washing the IBF system, including the filter assembly, should be protected or removed to avoid damaging the filter media with high pressure spray nozzles or to prevent solvents rinsing away the oil in the filter media.

8 TROUBLESHOOTING AND MAINTENANCE

8.1 MAINTENANCE GENERAL

CAUTION

THOROUGHLY REVIEW AND BECOME FAMILIAR WITH THE APPENDIX A OR APPENDIX B - PARTS FIGURES BEFORE PERFORMING MAINTENANCE ON THE IBF SYSTEM.

NOTE

Except where otherwise indicated, all torque values shall be in accordance with Chapter 7 of FAA Advisory Circular AC 43.13-1B.

a. The components of the system are divided, generally as a scope of work, into Filter Assembly / Seal / Engine Wash Tube, Structural Components, and Systems and Electrical components throughout the manual. Refer to Appendix A or B for items considered structural components. Refer to Appendix A or B for items considered electrical and systems components. Table 1 gives a recommended inspection schedule for the components of the system. The troubleshooting guide in Table 5 provides additional guidance for performing inspections when encountering trouble with the system.

b. The maintenance chapter is organized by removal, inspection, troubleshooting, adjustment, calibration and / or repair, and installation for the major components noted above, as applicable to the particular component. For some components a functional check is included. Not all components will require adjustment, or calibration, or have any approved functional check or repair procedures. Contact AFS for possible repairs when not listed in this manual. In some cases defective components will require replacement.

c. In general, visually inspect all structural components for oversized or elongated holes, deformation, cracks, corrosion, missing fasteners or components, fretting, galling, etc. Any component exhibiting these conditions requires repair or replacement.

d. In general, visually inspect fasteners for damaged or missing threads, in both the bolt or screw and the nut or nut plate. If a self-locking fastener can be fully threaded by hand, replace the self-locking fastener.

e. In general, visually inspect all electrical connections for security, corrosion, arcing, breakdown of insulation, and overheating. Repair or replace components exhibiting defects. Inspect and repair components per Bell Helicopter technical manuals or AC 43.13-1, Chapter 11.

8.2 COMPONENTS - GENERAL DESCRIPTION

8.2.1 FILTER ASSY / ENGINE WASH TUBE ASSY / FILTER SEAL

Figures A-1, A-4, and A-10)

a. Filter Assembly - The Filter Assembly is composed of the filter media (stainless steel mesh covering cotton gauze) bonded into the aluminum alloy filter frame assembly.

b. Engine Wash Tube Assembly - The engine wash tube is composed of formed aluminum tube, aluminum spray nozzle and associated “AN” fittings and attachment hardware.

c. Seal - The Seal is expanded foam with adhesive backing.

8.2.2 STRUCTURAL COMPONENTS

(Refer to Appendix A Figures or Appendix B Figures)

a. Bell 206L1/C30, 206L-3, & 206L-4 Air Induction Cowling (OEM Equipment) - The Bell 206L1/C30, 206L-3, & 206L-4 Air Induction Cowling is part of the original equipment manufacturer supplied for the Bell 206L-1, 206L-3, & 206L-4 helicopters. For description see Bell 206L-1, 206L-3, & 206L-4 series technical manuals.

b. Cowling Access Door - The cowling access door is formed and heat treated aluminum alloy with appropriate mounting holes providing access to the filter assembly and additional access inside the Air Induction Cowling. Chemical conversion coating and epoxy primer provide an organic protective coating.

c. Filter Frame Adapter - The Filter Frame Adapter is sheet stock aluminum alloy providing structural support for the mounting of the Filter Assembly and the Bypass Floor Assembly. Chemical conversion coating and epoxy primer provide an organic protective coating.

d. Bypass Floor Assembly / Bypass Door / Seal - The Bypass Floor Assembly consists of a machined aluminum alloy floor, a machined aluminum alloy actuator bracket, a military standard (MS) aluminum alloy hinge and steel pin, machined aluminum alloy bypass door, stainless steel mesh screen, aluminum sheet metal mounting brackets and provisions for mounting the Differential Pressure Switch and Filter Maintenance Aid, and associated MS hardware and other standard aircraft hardware for mounting and installation provisions.

8.2.3 SYSTEMS AND ELECTRICAL COMPONENTS

(Refer to Appendix A Figures or Appendix B Figures)

a. Cockpit Switch / Indicator - The cockpit switch / indicator provides both a switching function and indicating information to the pilot. The construction details of the component do not warrant field maintenance. Repair or servicing of this component requires the component to be sent back to AFS for disposition.

b. Differential Pressure Switch - The Differential Pressure Switch provides a signal to the Cockpit Switch / Indicator for annunciation of the “FILTER” light to signal the differential pressure across the Filter Assembly has reached a preset limit. The construction details of the component do not warrant field maintenance. Repair of this component requires the component to be sent back to AFS for disposition.

c. Filter Maintenance Aid - The Filter Maintenance Aid provides an indication to maintenance personnel as to the trend of the differential pressure across the Filter Assembly. The construction details of the component do not warrant field maintenance. Repair of this component requires it to be sent back to AFS for disposition, or replaced. The FMA is an aid to help maintenance personnel and pilots to ascertain the current condition or trend in accumulation of dirt on the Filter Assembly.

d. Actuator - The Actuator provides mechanical actuation of the Bypass Door should the pilot depress the cockpit switch / indicator. The construction details of the component do not warrant field maintenance. Repair of this component requires the component to be sent back to AFS for disposition or replaced.

e. Wiring, Wiring Harness, Connectors, Backshells, Circuit Breaker – The wiring and wiring harness utilizes wire per Military Specification Mil-W-22759/41. The gauge and marking identification is specified on the wiring diagram. The connectors, backshells, and circuit breaker are military specification components, or where applicable, vendor designed components. The construction details of these components (other than wiring) do not warrant field maintenance.

8.3 FILTER ASSY / ENGINE WASH TUBE ASSY / FILTER SEAL

(Refer to Figure 6 and Appendix A Figures or Appendix B Figures)

8.3.1 FILTER ASSY / ENGINE WASH TUBE ASSY

8.3.1.1 REMOVAL – FILTER ASSY / ENGINE WASH TUBE

a. Remove the Access Door by removing the fasteners that retain the Access Door. Remove the Access Door (See Appendix A Figures or Appendix B Figures).

b. Loosen the Engine Wash Tube from the fitting on the Bypass Floor Assembly (See Appendix A or Appendix B Figures).

c. Remove the hardware attaching the Filter Assembly to the Filter Frame Adapter (See Appendix A or Appendix B Figures). Remove the fasteners from the air intake side of the cowling.

d. Use a plastic scraper to gently break any seal between the Filter Assembly and the Seal itself. The Filter Assembly must be carefully removed so as not to damage the Filter Seal. Remove the Filter Assembly through the slot exposed when the Access Door is removed.

e. Remove the hardware attaching the Engine Wash Tube to the Filter Assembly (See Appendix A or Appendix B Figures).

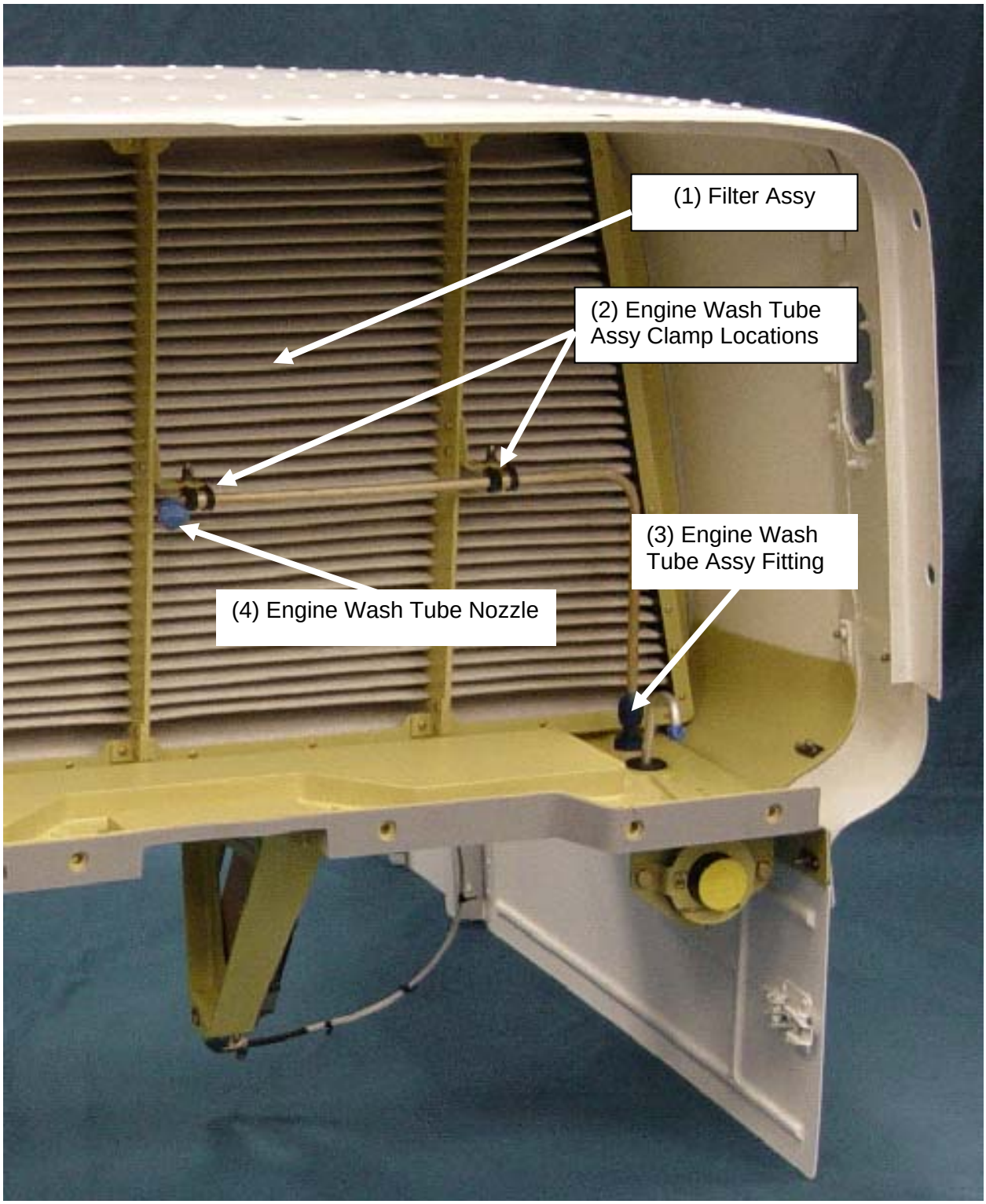

Figure 6: Engine Wash Tube Assembly Orientation to Filter Assembly

8.3.1.2 INSPECTION – FILTER ASSY / ENGINE WASH TUBE

NOTE

After servicing of the Filter Assembly or at any time the Filter Assembly is inspected, the pleats may require straightening or crimping. If you cannot see the bottom of the pleat, the airflow will be restricted and/or the pleats will adhere to one another when dirt loaded. Any restriction to the flow through the pleats will result in increased differential pressure and reduction in dirt loading capacity. In order to insure ideal flow characteristics through the filter media, the pleats must be straightened or crimped with a hand seamer.

a. Visually inspect the pleats on both sides of the filter. If you cannot see the bottom of the pleat, when sighting the length, or depth of the pleat, straightening of the pleat is required. Refer to “Adjustment” for pleat straightening procedures.

b. If this inspection is in response to a FILTER light indication or failed PAC, perform troubleshooting per Table 5. If troubleshooting indicates a dirty filter, service filter per paragraph 7.3.

c. Inspect the Filter Assembly frame for cracks, gouges, distortion or deformation, corrosion, loose or missing fasteners, and missing or deteriorated protective coating. Refer to “Repair” for criteria / disposition.

d. Inspect the Filter Seal. Refer to “Filter Seal” procedures.

e. Inspect the engine wash tube for cracks, kinks, leaks, corrosion, deformation and security. Refer to “Repair” for criteria / disposition.

8.3.1.3 TROUBLESHOOTING – FILTER ASSY / ENGINE WASH TUBE

See Table 5 for troubleshooting guide.

8.3.1.4 ADJUSTMENT - FILTER

CAUTION

HAND SEAMER MUST BE LIMITED TO A MAXIMUM JAW DEPTH OF 1 1/4 INCH. A DEEPER JAW DEPTH CAN RESULT IN DEFORMATION OR DAMAGE TO THE ADJOINING PLEATS.

CAUTION

DO NOT OVER CRIMP AND CRUSH PLEAT; CARE MUST BE TAKEN TO SQUEEZE THE PLEATS WITHOUT DAMAGING THE PLEATED SCREEN. THE RADIUS AT THE TOP OF THE PLEAT SHOULD REMAIN INTACT, NOT CREASED.

a. If you cannot see the bottom of a pleat, use a hand seamer (See Special Tools / Special Equipment, Paragraph 8.9.a.) to crimp the pleat and to straighten the pleat. Sight down the length and depth of the pleat to confirm the pleat is straightened (See Figure 7).

b. Once one side is crimped, flip the filter over and crimp the other side as required following the guidance above. Use caution not to crush the pleats when straightening them. Use care to maintain the original radius, as much as possible, at the top of the pleat.

Figure 7: Hand Seamer used to Straighten or Crimp Pleats

8.3.1.5 CALIBRATION

Not applicable.

8.3.1.6 REPAIR - Filter Media, GENERAL

WARNING

ADHESIVE VAPORS (SUCH AS MAY BE CONTAINED IN SEALING MATERIAL AMS 3276 OR MIL-S-8802), MAY CAUSE IRRITATION OF EYES, NOSE, AND RESPIRATORY SYSTEM. EYE AND SKIN CONTACT WITH MATERIAL MAY CAUSE IRRITATION. IF INGESTED, MAY CAUSE GASTRIC DISTRESS. FLUSH EYES WITH WATER FOR 15 MINUTES. WASH SKIN WITH SOAP AND WATER. IF INHALED, MOVE TO FRESH AIR. IN ALL CASES GET IMMEDIATE MEDICAL ATTENTION. WORK IN A WELL-VENTILATED AREA. WEAR GLOVES AND SAFETY GLASSES.

NOTE

Repair filter media damage <u>after</u> cleaning but <u>prior</u> to oiling of filters.

8.3.1.7 REPAIR - Filter Media, Small Ruptures, Tears, or Holes

a. In the event of damage to the filter media, ruptures in the filter media may be repaired. Small ruptures defined as smaller than .500 inch diameter or length can be sealed shut without degradation of performance to the Filter Assembly. The up to 8 small ruptures in the filter media may be repaired on a single filter, but no repair may be within 1" of an adjacent repair.

b. Prior to performing any of these repairs, the filter material must be cleaned of contamination and oil. Refer to Chapter 7 for cleaning of the Filter Assembly. Perform the repair to a cleaned and dry Filter Assembly. Each time the entire Filter Assembly is cleaned, repaired, and oiled, a mark shall be scribed on the Filter Assembly data plate in accordance with Paragraph 6-2 indicating a cleaning cycle was performed.

c**.** Trim ruptures, tears, or holes in the filter media up to .500 inches in length or diameter to remove loose material (wire or cotton gauze).

d. Seal the affected area using two-part Sealant, AMS 3276 or MIL-S-8802. Allow the Sealant to bleed into the filter material and cure. Follow manufacturer's directions for proper mixing, application, and curing of the two-part Sealant.

e. Proceed with oiling the filter. Refer to Chapter 7.

8.3.1.8 REPAIR - Filter Media, Large Ruptures, Tears, or Holes

Larger ruptures exceeding .500 inch in size are not repairable in the field. Contact AFS for disposition and possible repair procedures, or discard the Filter Assembly.

8.3.1.9 REPAIR – Filter Assy/ Engine Wash Tube, Other Damage

a. The repair procedures defined above are for damage resulting in ruptures, tears, or holes in the filter media. The following is for field repairable damage to the Filter Assembly frame. Field repairable damage to the Filter Assembly frame is limited to blending of scratches and gouges, and / or the re-application of protective coatings. See Table 4 for application of protective coatings.

b. Any damage to the filter frames such as cracking requires the Filter Assembly to be returned to AFS for evaluation and disposition, or replacement. Any damage to the filter frames such as warping or distortion (to the extent that the Filter Frame, when installed against the Filter Frame Adapter and torqued, do not permit the Filter Assembly to sit flush against the Adapter Frame) requires the Filter Assembly be returned to AFS for evaluation and disposition, or be replaced.

c. Any damage to the Engine Wash Tube Assembly that restricts the flow, allows leakage, or impacts security is cause for replacement.

8.3.1.10 INSTALLATION – Filter Assy/ Engine Wash Tube

CAUTION

REMOVE COVER FROM THE ENGINE INLET PRIOR TO INSTALLING THE ACCESS DOOR.

CAUTION

OVER TIGHTENING OF THE FASTENERS MAY RESULT IN THE FASTENER BEING DAMAGED.

a. Position the two clamps on the Engine Wash Tube Assembly to the bottom side of each of the two support brackets located on two of the three combs on the aft side of the Filter Assembly. (See Appendix A or Appendix B Figures).

b. Install clamps using the associated hardware (See Appendix A or Appendix B Figures).

c. Prior to installation of the Filter Assembly, the Seal shall be visually inspected for security and damage. The Filter Assembly must be carefully inserted through the access door and positioned against the mounting frame. Ensure the Filter Assembly seats properly (not cocked, i.e. fits flush) against the Filter Frame Adapter.

d. Install fasteners from the air intake side of the cowling. Tighten all fasteners to 20-25 inch-pounds.

e. Connect Engine Wash Tube to Bypass Floor Assembly.

f. Install Access Door.

8.3.2 FILTER SEAL

8.3.2.1 REMOVAL

a. Gain access to the Filter Frame Adapter Assembly by removing the Filter Assembly. Refer to Paragraphs 4.3.1 and 8.3.1.

b. Carefully remove the Seal by peeling it away from the Filter Frame Adapter. Use a plastic scraper or other suitable tool that is softer than aluminum to peel the Seal from the Filter Frame Adapter. Discard the removed Seal.

8-3.2.2. INSPECTION

Inspect the Filter Seal for any tears, nicks, gouges, missing pieces or a permanent set or flattening of the Seal. If the Seal exhibits any of these conditions, repair or replace the Seal.

8.3.2.2 REPAIR

WARNING

ADHESIVE VAPORS (IN SEALANT SUCH AS RTV 736) MAY CAUSE IRRITATION OF EYES, NOSE, AND RESPIRATORY SYSTEM. EYE AND SKIN CONTACT WITH MATERIAL MAY CAUSE IRRITATION. IF INGESTED, MAY CAUSE GASTRIC DISTRESS. FLUSH EYES WITH WATER FOR 15 MINUTES. WASH SKIN WITH SOAP AND WATER. IF INHALED, MOVE TO FRESH AIR. IN ALL CASES GET IMMEDIATE MEDICAL ATTENTION. WORK IN A WELL-VENTILATED AREA. WEAR GLOVES AND SAFETY GLASSES.

a. Small tears, nicks, or gouges in the Seal may be repaired using RTV 736 Sealant. Use a wooden tongue depressor, cotton swab, or similar tool to dab a small amount of Sealant on the damage to repair tears, nicks, or gouges in the Seal. Smooth over Sealant to create a smooth flush repair similar to the original Seal cross section. Allow to dry before re-installing filter. If the repair does not allow the Filter Assembly from sealing to the Adapter replace the Seal.

b. If the Seal exhibits extensive tears, deep nicks or gouges, or missing pieces that would prevent the filter from properly sealing, replace the Seal.

8.3.2.3 INSTALLATION

a. Gain access to the Filter Seal. Refer to Filter Assembly removal and Filter Seal removal.

b. To install the Seal, remove the adhesive backing from the Seal. Locate and apply the Seal to a clean dry surface on Filter Frame Adapter and press in place.

8.4 STRUCTURAL COMPONENTS

8.4.1 BELL 206L1/C30, 206L-3, & 206L-4 AIR INLET COWL ASSEMBLY

(Refer to Figure A-1, A-2 or B-1, B-2)

8.4.1.1 REMOVAL

a. Disconnect electrical Bypass System Connector (See Appendix A or Appendix B Figures).

b. Remove fasteners from Bypass Floor Assembly attaching to engine firewall.

c. Remove Air Induction Cowling (See Figure 2, Item A and refer to Bell Helicopter Maintenance Manuals).

8.4.1.2 INSPECTION

a. The AFS IBF interfaces the Air Induction Cowling at the Filter Assembly Adapter Frame, Bypass Floor Assembly, the Access Door, and IML / OML covers. See Appendix A or Appendix B. At these locations inspect for chafing or fretting, elongation of fastener holes, damage to nut plates and fasteners, corrosion, cracking, and deformation.

b. Inspection for the above conditions and any other conditions that may be applicable are defined in the Bell Helicopter 206L-1, 206L-3 & 206L-4 technical manuals.

8.4.1.3 TROUBLESHOOTING

Not applicable.

8.4.1.4 ADJUSTMENT

Not applicable.

8.4.1.5 CALIBRATION

Not applicable

8.4.1.6 REPAIR

For repairs see Bell Helicopter 206L-1, 206L-3 & 206L-4 technical manuals.

8.4.1.7 INSTALLATION

a. Install Bell 206L1/C30, 206L-3 & 206L-4 Air Induction Cowling (See Figure 2, Item A and refer to Maintenance Manuals as applicable).

b. Install hardware in the Bypass Floor Assembly to the Firewall.

c. Connect Bypass System electrical disconnect.

8.4.2 BYPASS FLOOR ASSEMBLY

(Refer to Appendix A or B; Figure A-1, A-6, A-8, A-9 and A-10 or Figure B-1, B-6, B-8, B-9, and B-10)

8.4.2.1 REMOVAL

a. Disconnect the wiring harness from the Bypass System Disconnect (See Appendix A or Appendix B Figures)

b. Remove the hardware attaching the Bypass Floor Assembly to the Firewall from the Engine side of the Firewall.

c. Gain access to the Bypass Floor by removing the Bell 206L1/C30, 206L-3 & 206L-4 Air Induction Cowling (See Figure 2, Item A and refer to Maintenance Manual as applicable).

d. Disconnect the Engine Wash Tube (See Appendix A or Appendix B Figures) from the adapter on the Bypass Floor Assembly.

e. Remove the Filter Assembly (See Appendix A or Appendix B Figures) with the Engine Wash Tube attached.

f. Remove the hardware attaching the Bypass Floor Assembly to the Filter Frame Adapter (See Appendix A or Appendix B Figures).

g. Remove the hardware attaching the Floor Closeout Angles to the Bell 206L1/C30, 206L-3 & 206L-4 Air Induction Cowling (See Appendix A or Appendix B Figures).

h. Remove the Bypass Floor Assembly (See Appendix A or Appendix B Figures).

8.4.2.2 INSPECTION

a. Cracking. Visually inspect the Bypass Floor Assembly and related parts for cracking using 10x magnification at the corners, radiuses, and transitions in part thickness. Any fretting of faying surfaces, such as those at a crack may emit a black or grey dust or soot like material indicative of a crack. Inspect suspect areas carefully using the 10x magnification. Refer to adjustment / calibration / repair for disposition of cracks in the Bypass Floor Assembly or parts.

b. Reserved.

c. Protective Coatings. Visually inspect the Bypass Floor Assembly and related parts for missing, damaged, or “scratched through” protective coatings. Re-apply protective coatings per Table 4 of this chapter.

d. Corrosion. Visually inspect the Bypass Floor Assembly and related parts for corrosion in accordance with AC 43.13-1, Chapter 6 and Table 4.

e. Missing, damaged or loose associated components. Visually inspect the Bypass Floor Assembly for missing damaged or loose components.

8.4.2.3 TROUBLESHOOTING

Not applicable.

8.4.2.4 CALIBRATION / ADJUSTMENT

Not applicable.

8.4.2.5 REPAIR

a. Cracks. No un-repaired cracks are allowed in the Bypass Floor Assembly. Contact AFS for disposition and possible repairs.

b. Warping or distortion. Contact AFS for disposition and possible repairs.

c. Protective Coatings. Re-apply protective coatings per Table 4 of this chapter.

d. Corrosion. Treat corrosion in accordance with AC 43.13-1, Chapter 6 and Table 4.

e. Missing, damaged or loose associated components. Replace missing or damaged components. Secure loose components.

8.4.2.6 INSTALLATION

a. Position the Bypass Floor Assembly (See Appendix A or Appendix B Figures) to the Bell 206L1/C30, 206L-3 & 206L-4 Air Induction Cowling (See Figure 2, Item A).

b. Install the hardware attaching the Bypass Floor Assembly to the Filter Frame Adapter (See Appendix A or Appendix B Figures).

c. Install the hardware attaching the Floor Closeout Angles to the Bell 206L1/C30, 206L-3 & 206L-4 Air Induction Cowling (See Appendix A or Appendix B Figures).

d. Install the Filter Assembly (See Appendix A or Appendix B Figures) with the Engine Wash Tube attached.

e. Connect the Engine Wash Tube (See Appendix A or Appendix B Figures) to the adapter on the Bypass Floor Assembly.

f. Install the Bell 206L1/C30, 206L-3 & 206L-4 Air Induction Cowling (See Figure 2, Item A and refer to Maintenance Manual as applicable).

g. Install the hardware attaching the Bypass Floor Assembly to the Firewall from the Engine side of the Firewall.

h. Connect the wiring harness to the Bypass System Disconnect (See Appendix A or Appendix B Figures)

8.4.3 BYPASS DOOR

(Ref. Appendix A or B, Figures A-1, A-6, A-8, A-9, and A-10 or B-1, B-6, B-8, B-9, or B-10)

8.4.3.1 REMOVAL

a. Gain access to the Bypass Floor Assembly (See Paragraph 4.3).

b. Remove the Bypass Floor Assembly from the Bell 206L1/C30, 206L-3 & 206L-4 Air Induction Cowling (Refer to Paragraph 8.4.2.1).

c. Remove the bolt attaching the Actuator to the Bypass Door Clevis Plate (See Figure 11 and Appendix A or Appendix B Figures).

d. Carefully open the flattened end of one end of the hinge (See Appendix A or Appendix B Figures).

e. Remove the hinge pin (See Appendix A or Appendix B Figures).

f. Remove the Bypass Door (See Appendix A or Appendix B Figures).

8.4.3.2 INSPECTION

a. Cracking. Visually inspect the Bypass Door and related parts for cracking using 10x magnification at the corners, radiuses, and transitions in part thickness. Any fretting of faying surfaces, such as those at a crack may emit a black or grey dust or soot like material indicative of a crack. Inspect suspect areas carefully using the 10x magnification. No cracks are allowed in the Bypass Door. If cracks are found, Bypass Door must be replaced.

b. Warping or distortion. Visually inspect the Bypass Door and related parts for warping or distortion. Any warping or distortion that keeps the Bypass Door from creating a seal to the Bypass Floor requires disposition instructions from AFS or replacement of the door.

c. Protective Coatings. Visually inspect the Bypass Door and related parts for missing, damaged, or “scratched through” protective coatings. Re-apply protective coatings per Table 4 of this chapter.

d. Corrosion. Visually inspect the Bypass Door and related parts for corrosion in accordance with AC 43.13-1, Chapter 6, and Table 4.

e. Missing, damaged or loose associated components. Visually inspect for missing, damaged, or loose components.

8.4.3.3 TROUBLESHOOTING

See Table 5.

8.4.3.4 ADJUSTMENT

Refer to Actuator / Bypass Door Adjustment (See paragraph 8.5.4.4).

8.4.3.5 CALIBRATION

Not applicable.

8.4.3.6 REPAIR

a. Cracks. No cracks are allowed in the Bypass Door. Cracks are not repairable. If cracks exist, Bypass Door must be replaced.

b. Warping or distortion. Visually inspect the Bypass Door for warping or distortion. With the Bypass Door in the closed position the Bypass Door Seal should be uniformly compressed. If there are gaps refer to Bypass Door Adjustment. After adjustments are performed if the gaps still exist, the door is warped or distorted beyond limit. Replace Bypass Door.

c. Protective Coatings. Visually inspect the Bypass Door for missing, damaged, or “scratched through” protective coatings. Re-apply protective coatings per Table 4 of this chapter.

d. Corrosion. Treat corrosion in accordance with AC 43.13-1, Chapter 6 and Table 4.

e. Missing, damaged or loose associated components. Replace missing or damaged components. Secure loose components.

8.4.3.7 INSTALLATION

a. Locate the Bypass Door to the Bypass Floor Assembly (See Appendix A or Appendix B Figures).

b. Install the Bypass Door to the Bypass Floor Assembly by installing the hinge pin (See Appendix A or Appendix B Figures). Crimp both ends of hinge to prevent pin from backing out (See Appendix A or Appendix B Figures).

c. Temporarily install the Bolt attaching the Actuator to the Bypass Door Clevis Plate (See Figure 11, and See Appendix A or Appendix B Figures).

d. Perform functional check per Actuator / Bypass Door Adjustment procedures (Refer to Paragraph 8.5.4.7).

CAUTION

TO PREVENT INTERNAL DAMAGE TO THE ACTUATOR, HOLD THE ROD END WHILE LOOSENING, TIGHTENING, OR APPLYING TORQUE TO THE JAMB NUT.

CAUTION

INSTALL THE ACTUATOR BOLT TO THE BYPASS DOOR CLEVIS PLATE IN THE CORRECT ORIENTATION. FAILURE TO CORRECTLY INSTALL THE BOLT WILL RESULT IN DAMAGE TO THE BYPASS FLOOR AND ACTUATOR.

e. Upon completion of Actuator / Bypass Door Adjustment procedures confirm the permanent installation of hardware securing the Actuator rod end to the Bypass Door Clevis Plate (See Figure 11).

8.4.4 BYPASS DOOR SEAL

(Ref. Appendix A or B, Figure A-12 or B-12)

8.4.4.1 REMOVAL

a. Remove Bypass Floor Assembly from the Air Induction Cowling (Refer to Paragraph 8.4.2.1).

b. Remove Bypass Door (Refer to Paragraph 8.4.3.1).

c. Remove the Bypass Door Seal retainer (See Appendix A or Appendix B Figures) by carefully drilling out the MS20470AD4 rivets. Carefully peel away Seal retainer. The retainer is to be reused, do not discard.

d. Remove the damaged Seal (See Appendix A or Appendix B Figures) by peeling it away from the door. Scrape all sealant and Seal pieces from Bypass Door.

8.4.4.2 INSPECTION

a. Inspect the Bypass Door Seal for proper compression upon closing of the Bypass Door. The Seal should be compressed approximately 50% from its non-compressed cross section. Adjust Bypass Door to attain correct seal compression.

b. Inspect the Bypass Door Seal for any nicks, gouges, missing pieces or a permanent set or flattening of the Seal. If the Seal exhibits any of these conditions that would prevent the door from properly sealing, replace the Seal.

8.4.4.3 TROUBLESHOOTING

See Table 5 for trouble shooting guidance.

8.4.4.4 ADJUSTMENT / CALIBRATION / REPAIR

Perform adjustment to attain proper seal compression per instructions for Actuator / Bypass Door Adjustment.

8.4.4.5 INSTALLATION

a. Gain access to the Bypass Door with old Bypass Door Seal removed (Refer to Paragraph 8.4.3.1).

b. Prior to installing Seal Retainer, bond Bypass Door Seal in place on the Bypass Door using RTV-736 (See Appendix A or Appendix B Figures).

c. Install Seal Retainer and install rivets.

d. Install Bypass Door.

8.4.5 FILTER FRAME ADAPTER

(Refer to Appendix A or B, Figures A-1, A-2 and A-4 or B-1, B-2, and B-4)

8.4.5.1 REMOVAL

a. Break the sealant (AMS-3276) from the Filter Frame Adapter to the air inlet cowl stiffener (See Appendix A or Appendix B Figures).

b. Remove the hardware attaching the Filter Frame Adapter to the Bypass Floor Assembly.

c. Drill out rivets used to secure the Filter Frame Adapter to the Air Induction Cowling stiffener.

d. Remove the Filter Frame Adapter from the Air Induction Cowling.

8.4.5.2 INSPECTION

a. Cracking. Visually inspect the Filter Frame Adapter for cracking using 10x magnification at the corners, radiuses, and transitions in part thickness. Any fretting of faying surfaces, such as those at a crack may emit a black or grey dust or soot like material indicative of a crack. Inspect suspect areas carefully using the 10x magnification. Refer to adjustment / calibration / repair for disposition of cracks in the Filter Frame Adapter assembly.

b. Warping or distortion. Visually inspect the Filter Frame Adapter for distortion. Any warping or distortion causing the Filter Assembly not to seal requires disposition instructions from AFS, or replacement of the component.

c. Protective Coatings. Visually inspect the Filter Frame Adapter for missing, damaged, or “scratched through” protective coatings. Re-apply protective coatings per Table 4.

d. Corrosion. Visually inspect the Filter Frame Adapter and related parts for corrosion in accordance with AC 43.13-1, Chapter 6, and Table 4.

e. Missing, damaged or loose associated components. Visually inspect for missing, damaged, or loose components.

8.4.5.3 TROUBLESHOOTING

Not applicable.

8.4.5.4 ADJUSTMENT / CALIBRATION / REPAIR

a. Cracks. No crack repair is allowed in the Filter Frame Adapter without disposition from AFS.

b. Warping or distortion. Contact AFS for disposition and possible repair, or replace component.

c. Protective Coatings. Visually inspect the Filter Frame Adapter for missing, damaged, or "scratched through" protective coatings. Re-apply protective coatings Table 4 of this chapter.

d. Corrosion. Treat corrosion in accordance with AC 43.13-1, Chapter 6, and Table 4.

e. Missing, damaged or loose associated components. Replace missing, or damaged components. Secure loose components.

8.4.5.5 INSTALLATION

a. Locate the Filter Frame Adapter to the Air Induction Cowling stiffener and to the Bypass Floor Assembly. Secure the Filter Frame Adapter to the Bypass Floor Assembly with the nine (9) AN3 bolts and washers. Seal the Filter Frame Adapter to the Bell 206L1/C30, 206L-3 & 206L-4 Air Induction Cowling stiffener with AMS-3276 sealant Table 6 (See Appendix A or Appendix B Figures).

b. Secure the Filter Frame Adapter to the Bell 206L1/C30, 206L-3 & 206L-4 Air Induction Cowling stiffener using twenty (20) NAS1097AD4-5 rivets.

8.4.6 ACCESS DOOR / SEAL

(Refer to Appendix A or B, Figures A-1, A-17 and A-21 or B-1, B-17, and B-21)

8.4.6.1 REMOVAL

a. Remove the fasteners that attach the Access Door to the Air Induction Cowling (See Appendix A or Appendix B Figures).

b. Remove the Access Door.

c. To remove the seal, peel away from the Air Induction Cowling. Use care not to scratch the Air Induction Cowling.

8.4.6.2 INSPECTION

a. Cracking. Visually inspect the Access Door for cracking. Any fretting of faying surfaces, such as those at a crack may emit a black or grey dust or soot like material indicative of a crack. Inspect suspect areas carefully using the 10x magnification. Inspect areas around fasteners carefully. No cracking is allowed.

b. Warping or distortion. Visually inspect the Access Door for distortion. Warping or distortion will be evident by bowing or springing of components when removed from their installed position. The Access Door should fit the engine inlet door flush with no gaps. Refer to adjustment / calibration / repair for adjustment and repair of the Access Door.

c. Protective Coatings. Visually inspect the Access Door for missing, damaged, or "scratched through" protective coatings.

d. Corrosion. Visually inspect the Access Door for corrosion in accordance with AC 43.13-1, Chapter 6, and Table 4.

e. Inspect the Seal for adhesion to the Air Induction Cowling and tears. No more than .400 inch long tears can be repaired. Tears greater than .400 inch require replacement of the seal.

8.4.6.3 TROUBLESHOOTING / ADJUSTMENT / CALIBRATION

Not applicable.

8.4.6.4 REPAIR

a. Cracks. No cracks are allowed in the Access Door.

b. Warping or distortion. Carefully attempt to straighten or re-align distorted or warped Access Doors to fit the contour of the Air Induction Cowling. If the Access Door will not lay flush with the Air Induction Cowling after attempting to straighten, replace the Access Door.

c. Protective Coatings. Visually inspect the Access Door for missing, damaged, or “scratched through” protective coatings. Re-apply protective coatings per Table 4 of this chapter.

d. Corrosion. Treat corrosion in accordance with AC 43.13-1, Chapter 6, and Table 4.

e. Repair torn seal using RTV 736, Table 6. Apply a thin layer between the seal and the Air Induction Cowling.

8.4.6.5 INSTALLATION

a. Clean the Air Induction Cowling where the Seal will be installed. Peel the backing away from the Access Door Seal. Install the Seal to the Air Induction Cowling centering the Seal over the opening in the Fairing (See Appendix A or Appendix B Figures).

b. Locate the Access Door to the Air Induction Cowling.

c. Install the fasteners that attach the Access Door to the Air Induction Cowling.

8.5 SYSTEMS AND ELECTRICAL COMPONENTS

8.5.1 COCKPIT SWITCH / INDICATOR

(Refer to Appendix A or B, Figures A-22, A-23 and A-25 or B-22, B-23, and B-25)

8.5.1.1 REMOVAL

a. Gain access to the back of the instrument panel (See Appendix A or Appendix B Figures).

b. Remove connector at back of Cockpit Switch / Indicator.

c. Remove Cockpit Switch / Indicator cover.

d. Turn lug ¼ turn counter clockwise to unlock Cockpit Switch / Indicator from panel.

e. Slide Cockpit Switch / Indicator out of panel.

f. Tag and secure wiring.

8.5.1.2 INSPECTION

a. Inspect Cockpit Switch / Indicator for proper functioning. Refer to Paragraphs 8.5.1.5 and 8.5.1.6, and to Table 5 for troubleshooting.

b. Inspect Cockpit Switch / Indicator for security, damage, overheating, corrosion, or distortion. Replace defective component or contact AFS for disposition.

8.5.1.3 TROUBLESHOOTING

See Table 5 for troubleshooting guide.

8.5.1.4 ADJUSTMENT / CALIBRATION / REPAIR

Not applicable. Contact AFS for disposition of defective component or replace.

8.5.1.5 FUNCTION CHECK – "BYPASS" INDICATION

CAUTION

THIS PROCEDURE INTRODUCES THE POSSIBILITY OF ENGINE FOD.

a. Verify the Bypass Door is closed and aircraft electric power is ON.

b. Depress Cockpit Switch / Indicator to open the Bypass Door.

c. The word "BYPASS" should illuminate on the lower part of the Cockpit Switch / Indicator segment when the door reaches the full open position.

d. Verify the Bypass Door is open.

e. Depress the Cockpit Switch / Indicator again to close the Bypass Door.

f. The word "BYPASS" should extinguish on the lower part of the Cockpit Switch / Indicator segment.

g. Verify the Bypass Door is closed and if no longer needed, that aircraft electric power is OFF.

8.5.1.6 FUNCTION CHECK – "FILTER" INDICATION

a. Perform Differential Pressure Switch function check.

b. Verify Cockpit Switch / Indicator "FILTER" amber light illuminates.

8.5.1.7 INSTALLATION

a. Slide Cockpit Switch / Indicator into panel opening in correct orientation (See Appendix A or Appendix B Figures).

b. Open switch cover. Turn lug ¼ turn clockwise to lock Cockpit Switch / Indicator into panel.

c. Attach connector at rear of Cockpit Switch / Indicator.

d. Perform Cockpit Switch / Indicator Function Check.

8.5.2 DIFFERENTIAL PRESSURE SWITCH

(Refer to Appendix A or B, Figures A-6, A-9, and A-22 or B-6, B-9, and B-22)

8.5.2.1 REMOVAL

a. Gain access to the area below the Bypass Floor Assembly (Refer to paragraph 4.3.2).

b. Remove hoses, fittings, and attaching hardware from the Differential Pressure Switch (See Appendix A or Appendix B Figures).

c. Disconnect and secure connector (See Appendix A or Appendix B Figures).

e. Remove Differential Pressure Switch.

8.5.2.2 INSPECTION

Inspect for general serviceability, damage, corrosion, and missing components. Inspect the attaching hardware for security.

8.5.2.3 TROUBLESHOOTING

See Table 8-2 for troubleshooting guidance.

8.5.2.4 ADJUSTMENT / CALIBRATION / REPAIR

The construction details of the component do not warrant field maintenance. Repair of this component requires the component to be sent back to AFS for disposition.

8.5.2.5 FUNCTION CHECK

CAUTION

THIS PROCEDURE INTRODUCES THE POSSIBILITY OF ENGINE FOD.

CAUTION

IMPROPER USE OF THE ALTIMETER TEST SET COULD RESULT IN DAMAGE TO THE SWITCH CALIBRATION.

CAUTION

IMPROPER USE OF THE ALTIMETER TEST SET COULD RESULT IN DAMAGE TO THE SWITCH.

CAUTION

PULLING AN ALTITUDE OF GREATER THAN 1880 FEET ABOVE FIELD ELEVATION WILL DAMAGE THE DIFFERENTIAL PRESSURE SWITCH.

a. Gain access to the top side of the Bypass Floor Assembly (Refer to paragraph 4.3.1).

b. Connect a Barfield (or equivalent) altimeter test set vacuum system to the plenum tube assembly (See Appendix A or Appendix B Figures), by slipping a piece of 3/16 inch ID vinyl tubing over the end of the tube assembly. Ensure that the fit between the tubing and tube assembly is tight, i.e., no leakage.

c. Ensuring that aircraft electrical power is ON, operate the test set to an indicated altitude of 560 feet above the field elevation and gradually increase altitude. The differential pressure switch should actuate and send a signal to the Cockpit Switch / Indicator illuminating the “FILTER” light before the indicated altitude exceeds 680 feet.

	Test Station Elevation (ft)					
Test Method	**0**	**2000**	**4000**	**6000**	**8000**	**10000**
Low Pressure Calibrator (inches of H_2O)	9.0 ± 0.9					
Altimeter Test Set (ft above test station elevation)	620 ±60 ft	660 ±60 ft	700 ±70 ft	740 ±70 ft	790 ±80 ft	840 ±80 ft

Table 2: Differential Pressure Switch Elevation Table

d. If the Cockpit Switch / Indicator does not illuminate, pull IBF circuit breaker. Run the altimeter test set up to 680 feet above the field elevation, check for continuity across the terminals of the Differential Pressure Switch. If continuity is present, the Differential Pressure Switch function is acceptable and the rest of the circuit is suspect. Upon completion of testing, ensure that aircraft electrical power is OFF. Refer to Table 2.

WARNING

Applying a vacuum greater than 221 in-H_2O (8 psi) may result in damaging the DP switch.

e. This will functionally check both the differential pressure switch and the “FILTER” portion of the Cockpit Switch / Indicator.

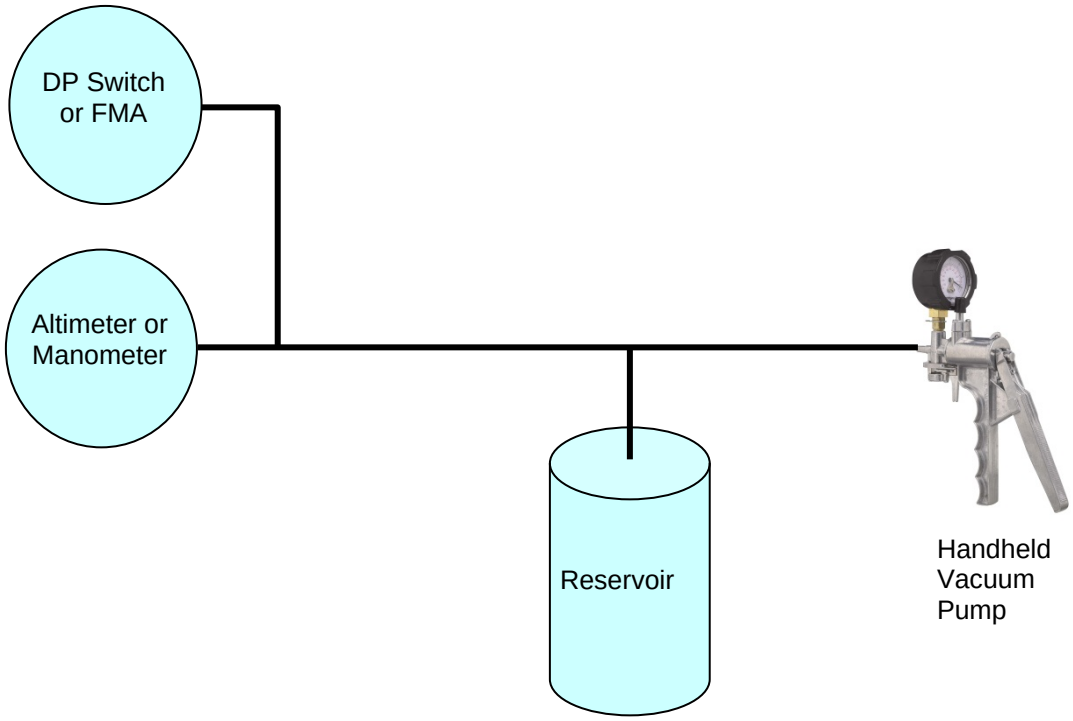

Figure 8: Test Equipment Setup

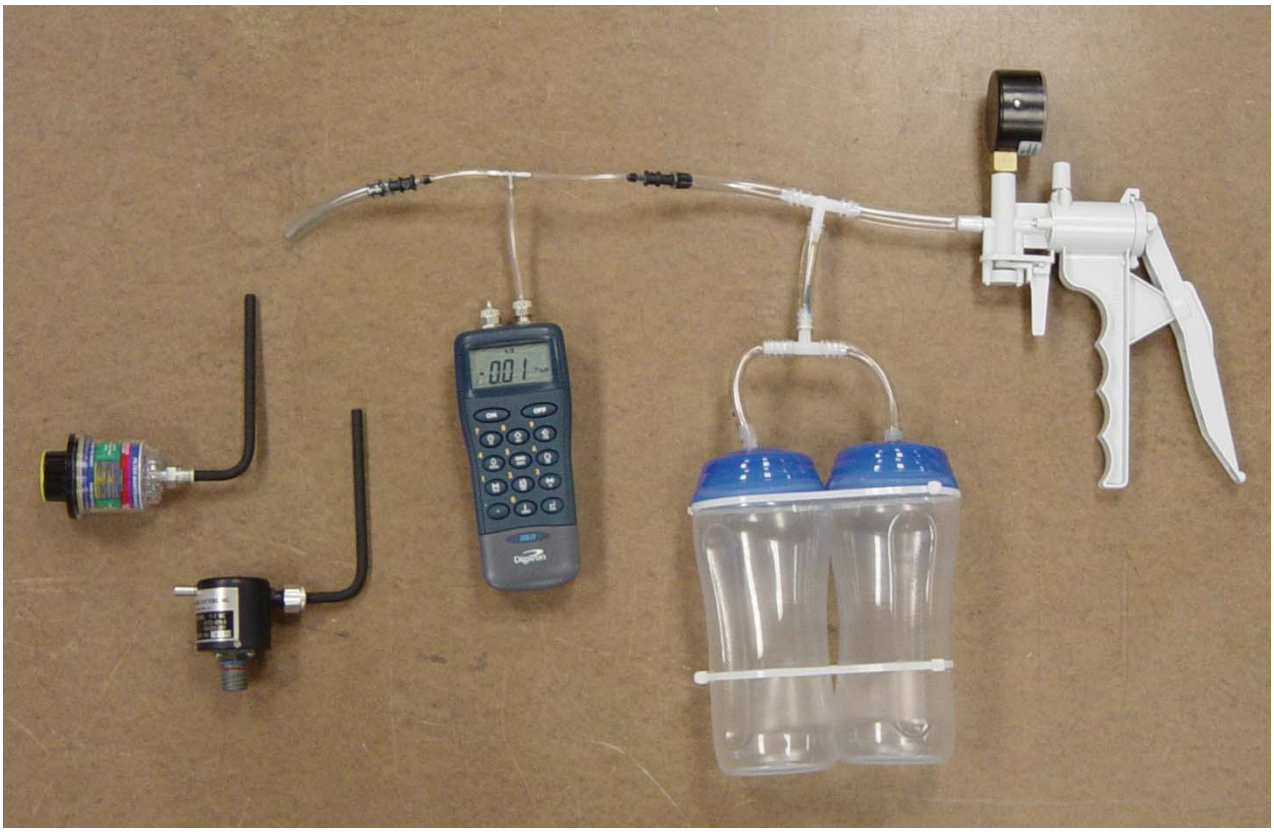

Figure 9: Test Setup with Manometer

8.5.2.6 INSTALLATION

a. Gain access to the area below the Bypass Floor Assembly (Refer to paragraph 4.3.2)

b. Place Differential Pressure Switch in position (See Appendix A or Appendix B Figures).

c. Attach hoses, fittings, and attaching hardware.

d. Connect and secure connector (See Appendix A or Appendix B Figures).

e. Perform Function Check of Differential Pressure Switch (Refer to paragraph 8.5.2.5).

8.5.3 FILTER MAINTENANCE AID

(Refer to Figure 10 and Appendix A or B, Figures A-6, A-8, A-11 and A-14 or B-6, B-8, B-11, and B-14)

8.5.3.1 REMOVAL

a. Gain access to the area below the Bypass Floor Assembly (Refer to paragraph 4.3.2)

b. Disconnect Tube Assembly from Filter Maintenance Aid (See Appendix A or Appendix B Figures).

c. Remove hardware and Mount Frame from Filter Maintenance Aid.

d. Remove Filter Maintenance Aid.

8.5.3.2 INSPECTION

a. Inspect the Filter Maintenance Aid and associated mounting for discoloration affecting readability, cracks, deformation, missing or damaged components, and serviceability.

b. Inspect the Filter Maintenance Aid Plenum Tube Assembly for debris and insure that the tube is clear and unobstructed.

c. Inspect the associated components, such as the Mount Assembly and hardware for missing components, cracks, distortion or deformation, scratches or gouges, or missing protective coatings.

8.5.3.3 TROUBLESHOOTING

See Troubleshooting Guide, Table 5.

8.5.3.4 ADJUSTMENT / CALIBRATION / REPAIR

The construction details of the component do not warrant field maintenance. Repair of this component requires the component to be sent back to AFS for disposition, or replaced.

8.5.3.5 Adjustment

The Filter Maintenance Aid is designed to hold the highest differential pressure across the filter assembly reached during the last flight, and can be reset by depressing the yellow button marked “PUSH TO RESET” located on the end of the filter maintenance aid (See Figure 10).

8.5.3.6 REPAIR

a. The construction details of the component do not warrant field maintenance. Repair of this component requires the component to be sent back to AFS for disposition, or replaced.

b. If the Filter Maintenance Aid fails the function check, disconnect the plenum tube assembly (See Appendix A or Appendix B Figures) from the Filter Maintenance Aid (See Appendix A or Appendix B Figures), and inspect for damage or blockage of the tube assembly. Inspect the opening on the Filter Maintenance Aid for obstructions. Remove obstructions as required. Reattach tube assembly and perform function check (Refer to paragraph 8.5.3.7). If it fails function check, replace FMA.

c. Replace damaged sheet metal components of the Mount Assembly and missing or damaged hardware.

d. Re-apply corrosion protection to Mount Hardware per Table 6.

8.5.3.7 FUNCTION CHECK

CAUTION

THIS PROCEDURE INTRODUCES THE POSSIBILITY OF ENGINE FOD.

CAUTION

IMPROPER USE OF THE ALTIMETER TEST SET COULD RESULT IN DAMAGE TO THE FILTER MAINTENANCE AID.

CAUTION

IMPROPER USE OF THE ALTIMETER TEST SET SUCH AS PULLING AN ALTITUDE OF GREATER THAN 1880 FEET ABOVE FIELD ELEVATION WILL DAMAGE THE FILTER MAINTENANCE AID.

a. Gain access to the area above the Bypass Floor Assembly (Refer to paragraph 4.3.1)

b. Connect the Barfield (or equivalent) altimeter test set vacuum system to the plenum tube assembly (See Appendix A or Appendix B Figures), by slipping a piece of 3/16 inch ID vinyl tubing over the end of the tube assembly. Ensure that the fit between the tubing and tube assembly is tight, i.e., no leakage.

c. Reset the Filter Maintenance Aid by depressing the yellow button marked “PUSH TO RESET” located on the end of the filter maintenance aid (See Figure 10).

d. The maintenance aid should indicate in the red zone within the following range:

	Test Station Elevation (ft)					
Test Method	**0**	**2000**	**4000**	**6000**	**8000**	**10000**
Low Pressure Calibrator (inches of H_2O)	12.0 ± 1.2					
Altimeter Test Set (ft above test station elevation)	830 ±80 ft	880 ±90 ft	930 ±90 ft	990 ±100 ft	1060 ±110 ft	1130 ±110 ft

Table 3: FMA Elevation Table

8.5.3.8 INSTALLATION

a. Gain access to the area below the Bypass Floor Assembly (Refer to paragraph 4.3.2)

b. Position the Filter Maintenance Aid into the Mount Assembly (See Appendix A or Appendix B Figures).

c. Install hardware and connect Tube Assembly.

8.5.4 ACTUATOR

(Refer to Figure 11, and Appendix A or B, Figures A-6, A-7, A-8, A-10, A-14, A-16 and A-22 or B-6, B-7, B-8, B-10, B-14, B-16, and B-22)

8.5.4.1 REMOVAL

a. Gain access to the area below the Bypass Floor Assembly (Refer to paragraph 4.3.2)

b. Disconnect and secure circular connector at Actuator (See Appendix A or Appendix B Figures).

c. Remove hardware (Figure 11, Detail A, Items 1, 2, 4, 7, & 8) attaching the Actuator (Figure 11, Detail A, Item 5) to the Bypass Door Clevis Plate (Figure 11, Detail A, Item 3).

d. Remove hardware (See Appendix A or Appendix B Figures) attaching the Actuator (See Appendix A or Appendix B Figures) to the Actuator Support (See Appendix A or Appendix B Figures).

e. Remove Actuator (See Appendix A or Appendix B Figures).

8.5.4.2 INSPECTION

a. Inspect Actuator for cracks, damage, security of installation, corrosion, and serviceability.

b. Inspect the Circular Connector for damage, security, corrosion and serviceability.

c. Inspect the Bypass Floor contact to the Bypass Door Seal. The Seal should be compressed approximately 50% with no visible gaps. Use care not to damage the seal when checking for gaps / compression of the Seal. Refer to Adjustments if Seal compression is discrepant.

8.5.4.3 TROUBLESHOOTING

a. Refer to Table 5 for troubleshooting guidance.

b. Perform Function Check. If Function Check indicates a discrepancy with the Actuator replace the actuator.

8.5.4.4 ADJUSTMENT

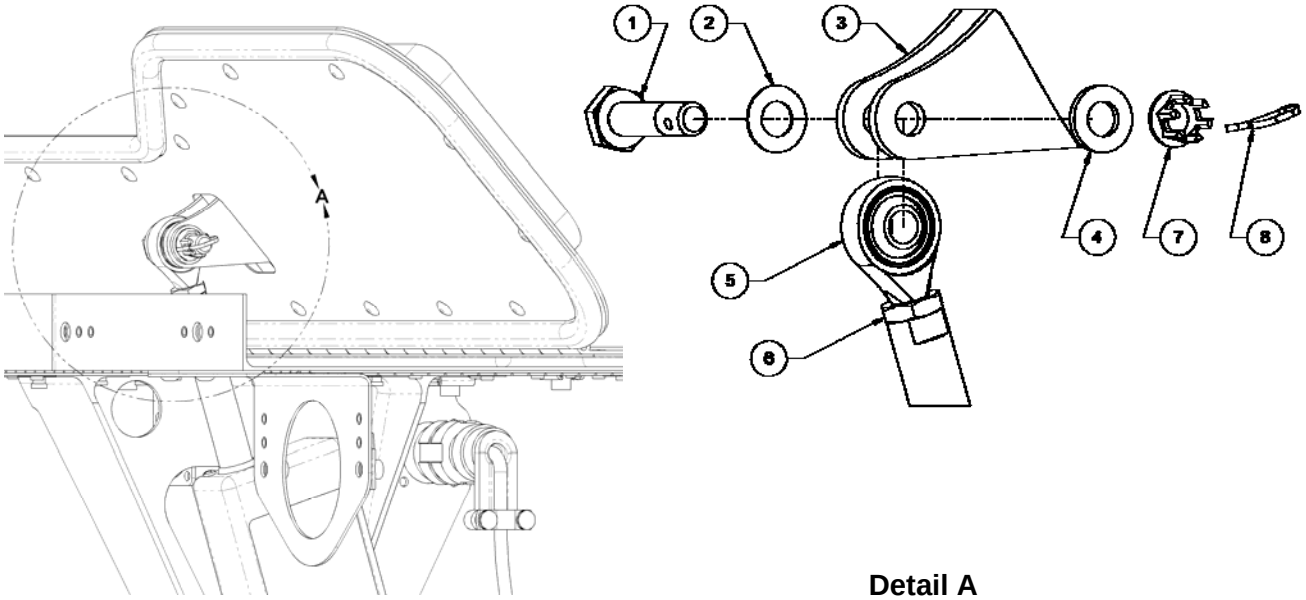

Figure 11: Actuator / Bypass Door Adjustment

a. Clear the area of the Bypass Door of any tools, hardware, or other obstructions.

b. After ensuring that aircraft power is ON, depress Cockpit Switch / Indicator (See Appendix A or Appendix B Figures) to actuate the Actuator to open the bypass door (this fully extends the actuator rod). Verify the Bypass Door is open approximately 45 degrees. If the Bypass Door opening is not approximately 45 degrees, contact AFS for disposition or replacement of the actuator.

c. Remove hardware from Actuator rod end at Bypass Door. Refer to Figure 11, Detail A.

CAUTION

TO PREVENT INTERNAL DAMAGE TO THE ACTUATOR, HOLD THE ROD END WHILE LOOSENING, TIGHTENING, OR APPLYING TORQUE TO THE JAMB NUT.

CAUTION

INSTALL THE ACTUATOR BOLT TO THE BYPASS DOOR CLEVIS PLATE IN THE CORRECT ORIENTATION. FAILURE TO CORRECTLY INSTALL THE BOLT WILL RESULT IN DAMAGE TO THE BYPASS FLOOR AND ACTUATOR.

d. Loosen jamb nut (6) and adjust rod end (5) in or out, as required, one-half turn to attain greater or less Seal compression to the Bypass Door.

e. Temporarily re-install rod end bolt through the Bypass Door Clevis Plate. Actuate Cockpit Switch / Indicator to retract the Bypass Door. The Seal should be compressed approximately 50% with no visible gaps. Use care not to damage the seal when checking for gaps / compression of the Seal. Refer to Adjustments if Seal compression is discrepant.

f. Repeat steps b through e until the Seal is compressed correctly.

g. Permanently install hardware to attach the Actuator rod end to the Bypass Door Clevis Plate. Torque jamb nut (6) **25 TO 30 INCH-POUNDS.** Torque nut (7) **30 TO 40 INCH-POUNDS.**

h. Perform function check per paragraph 8.5.4.7.

i. Depress Cockpit Switch / Indicator to actuate the Actuator to close the bypass door and then ensure that aircraft power is OFF.

8.5.4.5 CALIBRATION

Not applicable.

8.5.4.6 REPAIR

a. Repair of the actuator is limited to removal of minor surface corrosion from the actuator shaft using fine sandpaper or crocus cloth (Table 6).

b. Damage to the actuator, such as cracking of the attachment lug, distortion, warping, or failure to actuate requires disposition by AFS or replacement.

c. The Actuator rod end and attachment hardware can also be replaced if they are damaged, corroded, or unserviceable. Referring to Figure 11, Detail A, replace the Actuator rod end (5) by loosening the jamb nut and removing / replacing the rod end. Perform the Actuator / Bypass Door Adjustment procedure per paragraph 8.5.4.4.

8.5.4.7 FUNCTION CHECK

a. Clear the area of the Bypass Door of any tools, hardware, or other obstructions.

b. Ensure that aircraft power is ON, and then depress Cockpit Switch / Indicator (See Appendix A or Appendix B Figures) to actuate the Actuator to close the bypass door.

c. Perform Seal compression inspection per the Actuator / Bypass Door Adjustment procedures, paragraph 8.5.4.4.

d. Depress Cockpit Switch / Indicator to actuate the Actuator to open the bypass door (this fully extends the actuator rod). Verify the Bypass Door is open approximately 45 degrees. If Bypass Door opening is not approximately 45 degrees, contact AFS for disposition or replacement of the actuator.

e. Verify the word “BYPASS” illuminates on the Cockpit Switch / Indicator, and ensure aircraft power is OFF.

f. If conditions are not met refer to Troubleshooting guide, Table 5, and Adjustment procedures, paragraph 8.5.4.4.

8.5.4.8 INSTALLATION

CAUTION

THIS PROCEDURE INTRODUCES THE POSSIBILITY OF ENGINE FOD.

CAUTION

TO PREVENT INTERNAL DAMAGE TO THE ACTUATOR, HOLD THE ROD END WHILE LOOSENING, TIGHTENING, OR APPLYING TORQUE TO THE JAMB NUT.

CAUTION

INSTALL THE ACTUATOR BOLT TO THE BYPASS DOOR CLEVIS PLATE IN THE CORRECT ORIENTATION. FAILURE TO CORRECTLY INSTALL THE BOLT WILL RESULT IN DAMAGE TO THE BYPASS FLOOR AND ACTUATOR.

a. Gain access to the area below the Bypass Floor Assembly (Refer to paragraph 4.3.2)

b. Clear the area of the Bypass Door of any tools, hardware, or other obstructions.

c. Install the Circular Connector to the Actuator (See Appendix A or Appendix B Figures). Ensure aircraft power is ON. Depress Cockpit Switch / Indicator (See Appendix A or Appendix B Figures) to actuate the Actuator to open the bypass door (this fully extends the actuator rod).

d. Orient actuator to the Bypass Door and Actuator Support (See Appendix A or Appendix B Figures).

e. Install hardware (See Appendix A or Appendix B Figures) attaching the Actuator (See Appendix A or Appendix B Figures) to the Actuator Support (See Appendix A or Appendix B Figures).

f. Temporarily install the Bolt (Figure 11, Detail A, Items 1) attaching the Actuator (Figure 11, Detail A, Item 5) to the Bypass Door Clevis Plate (Figure 11, Detail A, Item 3).

g. Perform functional check per Actuator / Bypass Door Adjustment procedures (See paragraph 8.5.4.7).

h. Upon completion of Bypass Door Adjustment procedures confirm the permanent installation of hardware (Figure 11, Detail A, Item 1, 2, 4, 7, & 8) securing the Actuator rod end (Figure 11, Detail A, Item 5) to the Bypass Door Clevis Plate (Figure 11, Detail A, Item 3), and that aircraft power is OFF.

8.5.5 WIRING, WIRING HARNESS, CONNECTORS, BACKSHELLS, CIRCUIT BREAKER, RELAY

(Refer to Appendix A or B, Figures A-6, A-7, A-22 thru A-27)

8.5.5.1 REMOVAL

a. Prepare aircraft for work performed on the electrical system by disconnecting the battery.

b. Remove hardware, clamps, spiral wrap from component, as applicable. Tag interfacing components for later installation. Remove affected components.

8.5.5.2 INSPECTION

The IBF wiring, wiring harness, and associated components is constructed of standard aircraft wire and connectors. Standard aircraft maintenance procedures should be used for inspections and repair of the harness and connectors. Routine aircraft maintenance should include visual inspection for evidence of chafing, damage, corrosion and insuring the circuit breaker and all pins, connectors, and backshells are secure. Inspect wiring, wiring harness and associated components per AC 43.13-1, Chapter 11.

8.5.5.3 TROUBLESHOOTING

a. See Table 5 for troubleshooting guidance.

b. See Appendix A or Appendix B Figures for wiring diagram, wire marking and identification, routing, and installation information.

8.5.5.4 ADJUSTMENT / CALIBRATION

Not applicable.

8.5.5.5 REPAIR

Standard aircraft maintenance procedures should be used for repair of the wiring, wire harness and associated components. See Appendix A or Appendix B Figures for wiring diagram, wire marking and identification, routing, and installation information. Perform repairs to affected components per AC 43.13-1, Chapter 11.

8.5.5.6 INSTALLATION

a. Prepare aircraft for work performed on the electrical system by disconnecting the battery.

b. Install affected component using appropriate hardware. Connect wiring per wiring diagram. Install clamps, spiral wrap and heat shrink as applicable to affected components per AC 43.13-1, Chapter 11.

8.6 FASTENER LISTING

Refer to the Appendix A or B – Parts Figures for a listing of fasteners and their location.

8.7 PROTECTIVE TREATMENT

a. The fairing assembly and structural components of the IBF system is composed primarily of aluminum alloy materials, except for standard hardware components and fasteners, and vendor components. Aluminum components are coated with an epoxy primer. Scratched or damaged aluminum components should be touched up with a small paint brush dipped in epoxy primer. Prepare epoxy primer per manufacturers instructions.

b. Aircraft finishes scratched or damaged should be recoated with the finish specified in the aircraft maintenance records and maintenance manual.

c. For the systems and electrical components, there are no protective treatments specified. Contact AFS for disposition of damaged components, or replace the damaged component.

Table 4: Protective Treatment for Components

Component	Material	Limits of Damage	Protective Treatment
Filter Assembly	Alum. Alloy Sheet Stk.	Scratches, pitting, gouges must be less than 20% of part thickness. See note 1.	Re-apply Epoxy Primer Ref Table 8-3
Engine Wash Tube	Alum. Alloy Tubing	Scratches, pitting, gouges must be less than 20% of part thickness. See note 1.	Chemical conversion coating. Ref Table 8-3
Bypass Floor Assembly			
Bypass Floor	Machined Alum Alloy	Scratches, pitting, gouges must be less than 10% of part thickness. See note 1.	Re-apply Epoxy Primer Ref Table 8-3
Bypass Door	Machined Alum Alloy	Scratches, pitting, gouges must be less than 10% of part thickness. See note 1.	Re-apply Epoxy Primer Ref Table 8-3
Actuator Bracket	Machined Alum Alloy	Scratches, pitting, gouges must be less than 10% of part thickness. See note 1.	Re-apply Epoxy Primer Ref Table 8-3
Filter Maint Aid Bracket	Alum. Alloy Sheet Stk.	Inspect for Serviceability	Re-apply Epoxy Primer Ref Table 8-3
Filter Frame Adapter	Alum. Alloy Sheet Stk.	Scratches, pitting, gouges must be less than 20% of part thickness. See note 1.	Re-apply Epoxy Primer Ref Table 8-3
Access Door	Alum. Alloy Sheet Stk.	Inspect for proper sealing / serviceability.	Chemical conversion coating. Ref Table 8-3 Then re-apply aircraft finish per aircraft records.

Notes:

1. Contact AFS for disposition instructions for components with more severe discrepancies or replace.

8.8 TROUBLESHOOTING GUIDE

The following table defines the probable cause, remedy, and ICA reference to the applicable procedure for correcting the trouble listed in the table. Multiple failures are not addressed in this table such as a failed actuator and failed wiring existing at the same time.

Table 5: Troubleshooting Guide

ITEM	TROUBLE	PROBABLE CAUSE	REMEDY	ICA REF
1	FILTER light fails to illuminate	Faulty connector Faulty circuit Faulty cockpit indicator Faulty delta P switch Faulty Relay	Check connectors to aircraft power, cockpit switch/indicator, and actuator. Check circuit continuity and repair circuit. Verify using caution light press-to-test; replace cockpit switch/indicator. Replace differential pressure switch. Check aircraft dimmer circuit; replace relay.	Para. 8-5.5. Para. 8-5.5. Para. 8-5.1. Para. 8-5.2. Para. 8-5.5.
2	FILTER light is dim	Failed LED(s) in indicator	Verify using caution light press-to-test; replace cockpit switch/indicator.	Para. 8-5.1.
3	FILTER light stays illuminated	Bypass obstructed Faulty delta P switch	Clear bypass path. Replace differential pressure switch.	 Para. 8-5.2.
4	BYPASS light fails to illuminate	Actuator misrigged Faulty connector Faulty circuit Faulty cockpit indicator Faulty actuator limit switch Faulty Relay	Check actuator rigging. Check connectors to aircraft power, cockpit switch/indicator, and actuator. Check circuit continuity and repair circuit. Verify using caution light press-to-test; replace cockpit switch/indicator. Replace actuator. Check aircraft dimmer circuit; replace relay.	Para. 8-5.4. Para. 8-5.5. Para. 8-5.5. Para. 8-5.1 Para. 8-5.4. Para. 8-5.5.
5	BYPASS light is dim	Failed LED(s) in indicator	Verify using caution light press-to-test; replace cockpit switch/indicator.	Para. 8-5.1.
6	BYPASS light stays illuminated	Faulty actuator limit switch	Replace actuator.	Para. 8-5.4.
7	Bypass door fails to close	Actuator misrigged Faulty connector Faulty circuit Faulty cockpit switch Faulty actuator	Check actuator rigging. Check connectors to aircraft power, cockpit switch/indicator, and actuator. Check circuit continuity and repair circuit. Check switch continuity in CLOSE position; replace cockpit switch/indicator. Replace actuator.	Para. 8-5.4. Para. 8-5.5. Para. 8-5.5. Para. 8-5.1. Para. 8-5.4.
8	Bypass door fails to open	Actuator misrigged Faulty connector Faulty circuit Faulty cockpit switch Faulty actuator	Check actuator rigging. Check connectors to aircraft power, cockpit switch/indicator, and actuator. Check circuit continuity and repair circuit. Check switch continuity in BYPASS position; replace cockpit switch/indicator. Replace actuator.	Para. 8-5.4. Para. 8-5.5. Para. 8-5.5. Para. 8-5.1 Para. 8-5.4.
9	FILTER light illuminates	Obstructed inlet Dirty filter	Clear engine inlet. Verify by checking FMA & inspect filter; service filter.	 Para. 7-3.
10	Engine fails PAC	Obstructed inlet Dirty filter	Clear engine inlet. Verify PAC results, check FMA, & inspect filter; service filter. NOTE: If engine still fails PAC - check engine.	 Para. 7-3.
11	Engine wash spray pattern not uniform	Spray nozzle clogged	Inspect & clear tube/nozzle to remove dirt / debris.	Para. 8-3.1.
12	FILTER/BYPASS fails to dim	Faulty Relay	Check aircraft dimmer circuit; replace relay.	Para. 8-5.5.
13	FILTER/BYPASS fails to brighten	Faulty Relay	Check aircraft dimmer circuit; replace relay.	Para. 8-5.5.

8.9 SPECIAL TOOLS / SPECIAL EQUIPMENT

NOTE

Standard Aircraft Mechanic Tools are not listed.

a. Hand Seamer – 1 1/4 inch maximum jaw depth. Hand seamers are available through many commercial aircraft supply stores and also through commercial heating and air conditioning supply stores. Recommend the following: Malco Tools "Hand Seamer with Forged Steel Jaw", Catalog # S2, S3 and S6. The S3 model is also available through Wicks Aircraft Supply, Part Number TP44-0, "Offset Hand Seamer".

b. Barfield or Equivalent Manufacturer Altimeter Test Set

8.10 CONSUMABLE MATERIALS, SUPPLIES, AND PROTECTIVE TREATMENT SPECIFICATIONS

Table 6: Consumable Materials, Supplies and Protective Treatment Specifications

Item	Description	Spec / Part No.
	Consumables	
1	Sealant	AMS 3276
2	Sealant	Mil-S-8802
3	Sealant	RTV 736
4	Sand paper 400-600 grit	Commercial avail.
5	Crocus Cloth	Commercial avail.
	Supplies	
6	Air Filter Oil	Squeeze bottle – AFS P/N 100100-014
6.1	Air Filter Oil	Gallon container – AFS P/N 100101-000
7	Air Filter Cleaner	Gallon container – AFS P/N 100201-000
	Protective Treatment Specs	
8	Epoxy Primer.	Mil-PRF-23337
9	Chemical Conversion Coating	Mil-C-5541 (One commercial trade name, "Alodine")
10	Aircraft Finish	See Aircraft Records for appropriate Finish / Top Coat.

ICA APPENDIX

PARTS FIGURES

ICA APPENDIX A – PARTS FIGURES FOR BELL 206L (C30), 206L-3, 206L-4 WITH METAL COWL

TABLE OF FIGURES

Figure A-1: 106000-105 IBF System Kit – Major Components 2
Figure A-2: Adapter Frame, Floor & Closeout Angle Installation 4
Figure A-3: IPS Scavenge Air Exhaust Cover Assembly - IML 6
Figure A-4: Filter Adapter Frame Assembly 7
Figure A-5: Floor Closeout Angle Assembly 8
Figure A-6: Wire Harness Assembly Installation 9
Figure A-7: Wire Harness Assembly 10
Figure A-8: Firewall Seal and Maintenance Indicator Installation 11
Figure A-9: Differential Pressure Switch Installation 13
Figure A-10: Bypass Door Assembly and Actuator Installation 15
Figure A-11: Ambient Tube Assembly 17
Figure A-12: Bypass Door Assembly 18
Figure A-13: Filter/Engine Wash Tube Assembly 20
Figure A-14: Floor Assembly 22
Figure A-15: Maintenance Indicator Mount Assembly 24
Figure A-16: Actuator Mount Assembly 25
Figure A-17: Access Door Kit Installation 26
Figure A-18: Angle Assembly, Sill, Door, Access – AFT, LWR 28
Figure A-19: Angle Assembly, Sill, Door, Access – FWD, LWR 29
Figure A-20: Angle Assembly, Sill, Door, Access – FWD, UPR 30
Figure A-21: Access Door Assembly 31
Figure A-22: 106400-103 Electrical System Installation Schematic 32
Figure A-23: 106400-103 Electrical System Installation 33
Figure A-24: Overhead Console 34
Figure A-25: Cockpit Switch/Indicator Installation 35
Figure A-26: Wire Routing – LKG INBD, LH Side 36

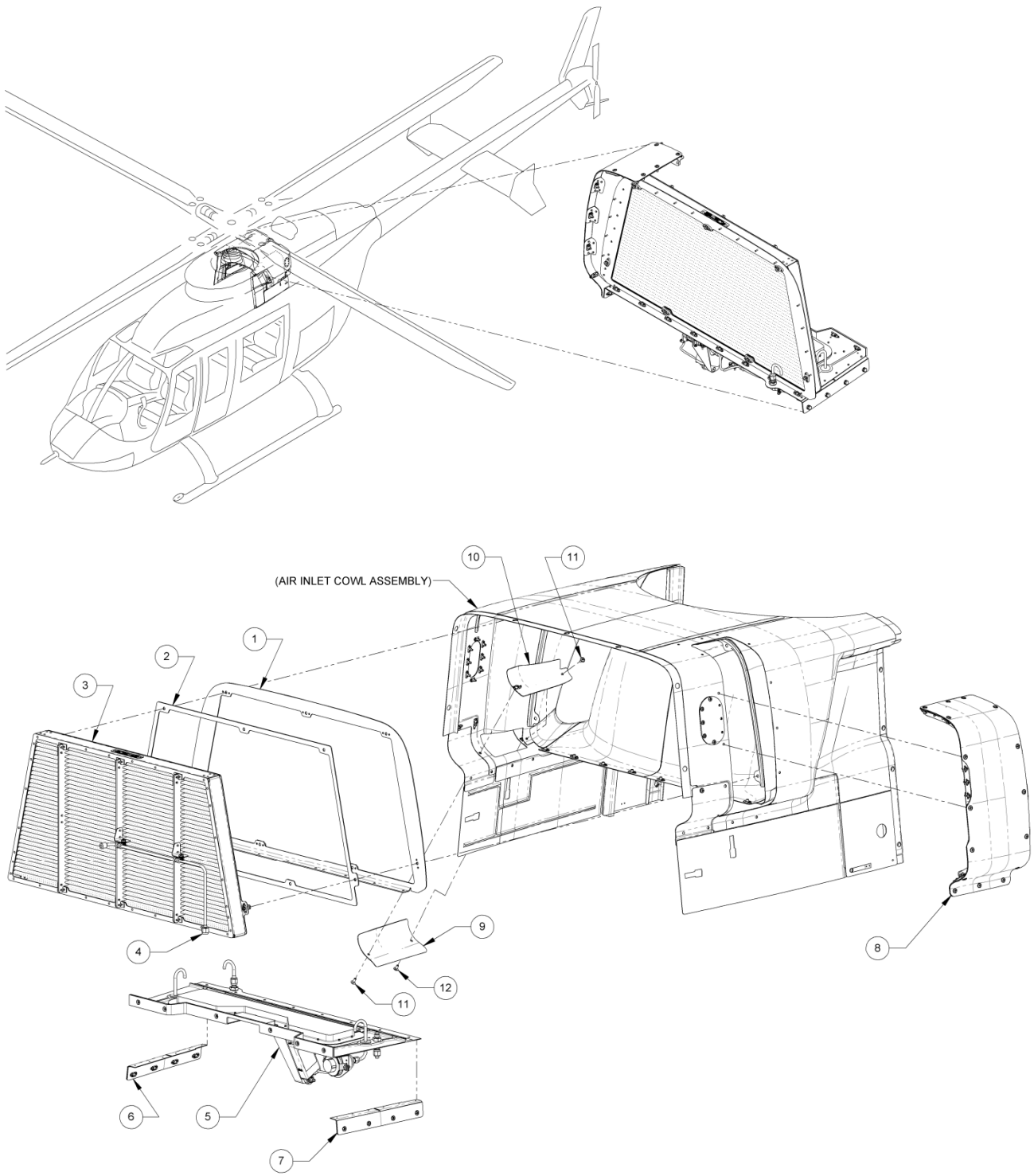

Figure A-1: 106000-105 IBF System Kit – Major Components

INDEX NUMBER	PART NUMBER	ITEM NAME	UNIT PER ASSY
		FIGURE A-1: IBF System Kit & Access Door Installation	
1	106102-101	Adapter Frame Assembly (See Figure 4 for breakdown)	1
2	106219-205	Filter Seal	1
3	106200-103	Filter Assembly (See Figure 13 for breakdown)	1
4	106202-101	Engine Wash Tube Assembly (See Figure 13 for breakdown)	1
5	106110-101	Bypass Floor Assembly (See Figure 6, 8, 9 & 10 for breakdown)	1
6	106103-101	Angle Assembly (See Figure 5 for breakdown)	1
7	106103-102	Angle Assembly (See Figure 5 for breakdown)	1
8	106301-101	Access Door Kit (See Figure 17 for breakdown)	1
9	106104-201	OML Exhaust Cover	1
10	106105-101	IML Exhaust Cover Assembly (See Figure 3 for breakdown)	1
11	AN525-10R8	Screw	2
12	AN525-10R7	Screw	1

*AN929-8J Cap used on initial installation to cap bleed air line.

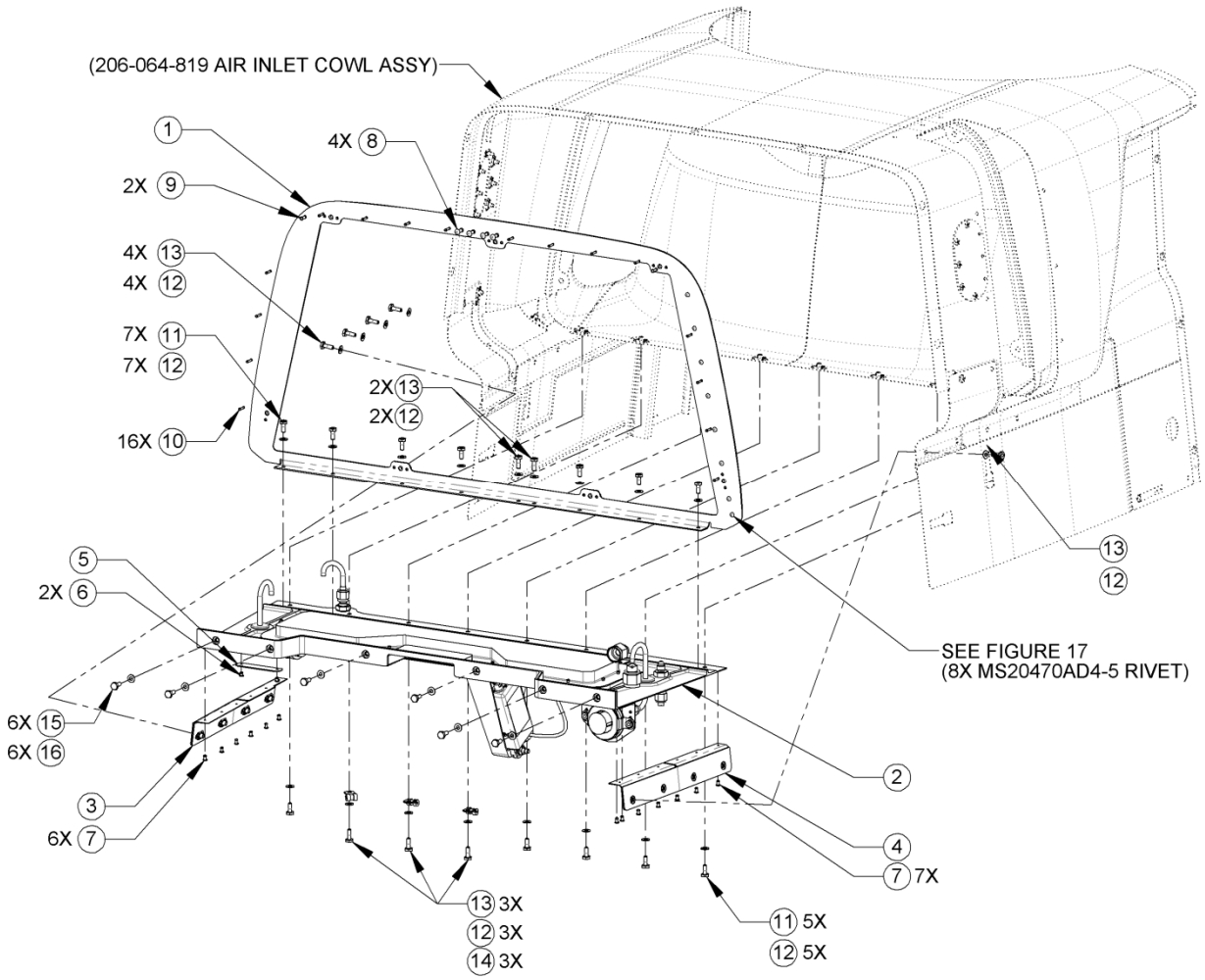

Figure A-2: Adapter Frame, Floor & Closeout Angle Installation

INDEX NUMBER	PART NUMBER	ITEM NAME	UNIT PER ASSY
		FIGURE A-2: Adapter Frame, Floor & Closeout Angle Installation	
1	106102-101	Adapter Frame Assembly (See Figure 4 for breakdown)	1
2	106110-101	Bypass Floor Assembly (See Figure 6, 8, 9 & 10 for breakdown)	1
3	106103-101	Closeout Angle Assembly (See Figure 5 for breakdown)	1
4	106103-102	Closeout Angle Assembly (See Figure 5 for breakdown)	1
5	106119-201 106119-205	Data Plate (used on -103) Data Plate (used on -101)	1 1
6	MS20470AD4-4	Rivet	2
7	MS20470AD4-5	Rivet	13
8	MS20470AD5-9	Rivet	4
9	NAS1097AD4-7-5	Rivet	2
10	NAS1097AD3-8	Rivet	16
11	NAS6203-3	Bolt	12
12	NAS1149D0332J	Washer	23
13	NAS6203-4	Bolt	11
14	MS21919WDG2	Clamp	3
15	AN3C4A	Bolt	6
16	NAS1149C0332R	Washer	6

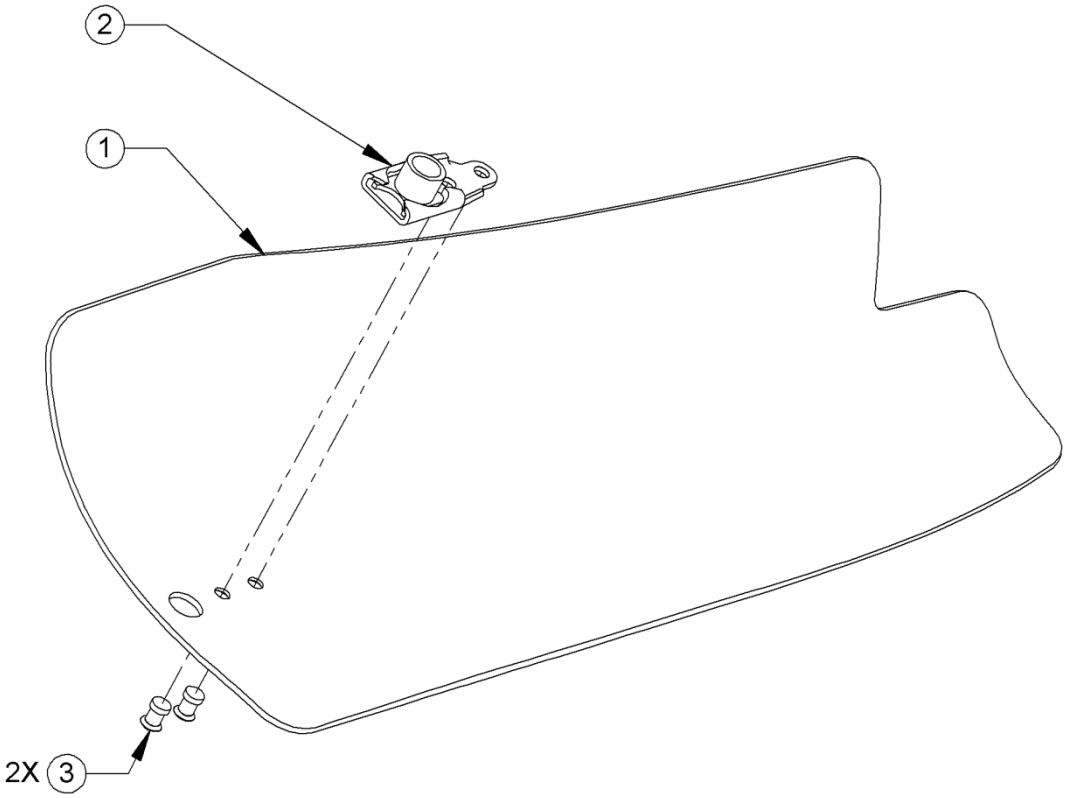

Figure A-3: IPS Scavenge Air Exhaust Cover Assembly - IML

INDEX NUMBER	PART NUMBER	ITEM NAME	UNIT PER ASSY
		FIGURE A-3: IPS Scavenge Air Exhaust Cover Assembly - IML	
1	106155-201 106105-203	Cover, Scavenge, IPS – IML (current) Cover, Scavenge, IPS – IML (superseded)	1
2	MS21061L3	Platenut	1
2	NAS1097AD3-4	Rivet	2

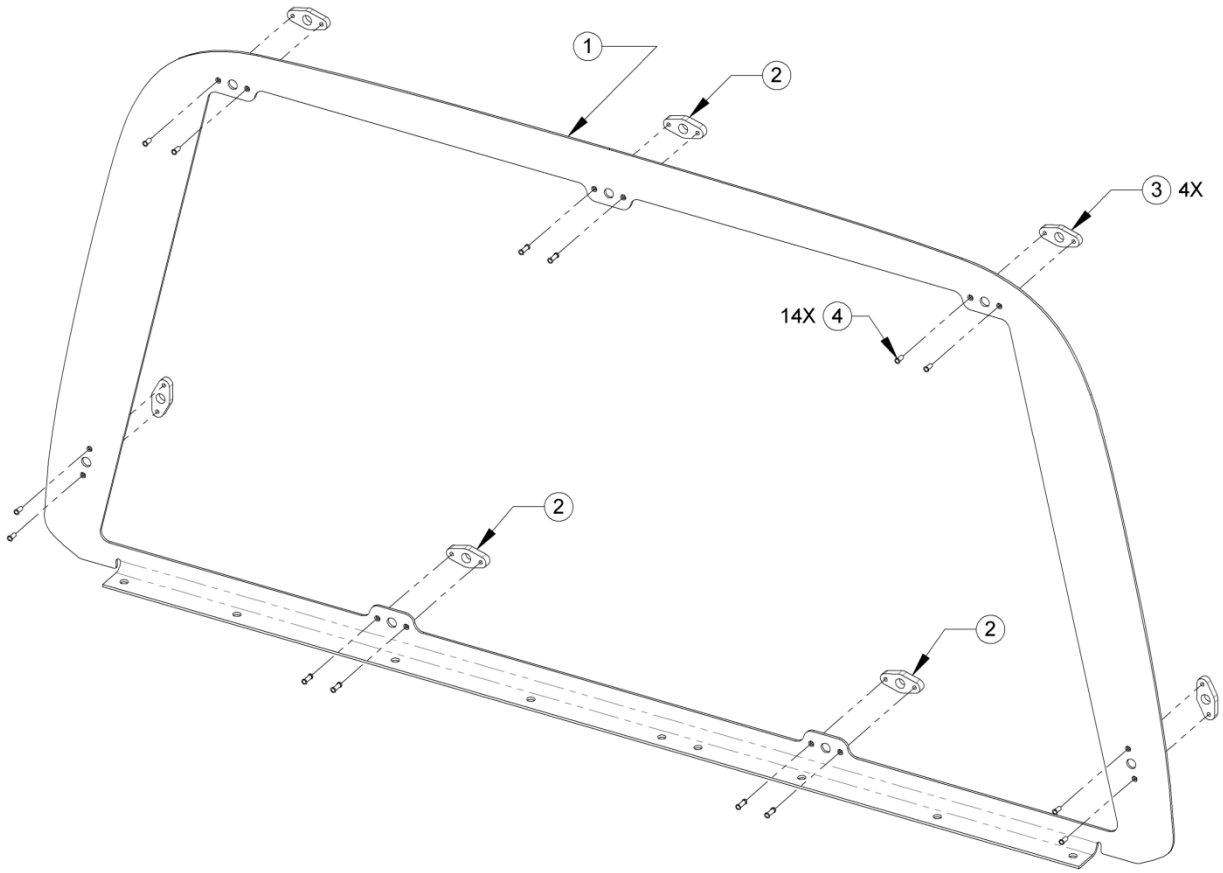

Figure A-4: Filter Adapter Frame Assembly

INDEX NUMBER	PART NUMBER	ITEM NAME	UNIT PER ASSY
		FIGURE A-4: Adapter Frame Assembly	
1	106219-205	Seal, Filter	1
2	106152-201 106102-201	Frame, Adapter, Filter (current) Frame, Adapter, Filter (superseded)	1
3	106107-201	Spacer, Adapter – Thin	4
4	106106-201	Spacer, Adapter – Thick	3
5	NAS1097AD3-6	Rivet (Not Shown)	14

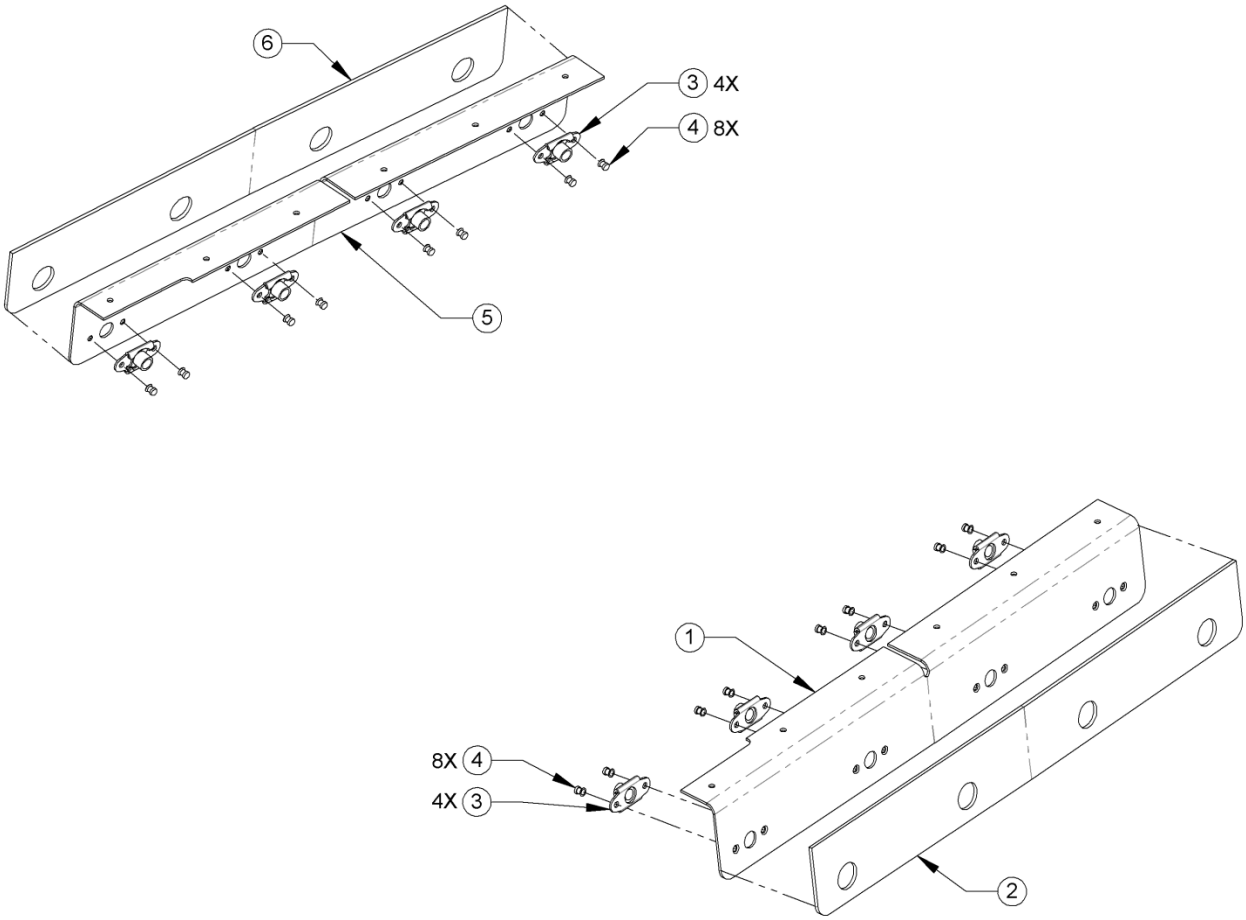

Figure A-5: Floor Closeout Angle Assembly

INDEX NUMBER	PART NUMBER	ITEM NAME	UNIT PER ASSY
		FIGURE A-5: Floor Closeout Angle Assembly	
1	106153-201 106103-203	Angle, Closeout, Floor (LH) (current) Angle, Closeout, Floor (LH) (superseded)	1
2	106108-203 106108-201	Seal, Angle (LH) (current) Seal, Angle (LH) (superseded)	1
3	MS21059L3	Platenut	8
4	NAS1097AD3-3	Rivet	16
5	106153-202 106103-204	Angle, Closeout, Floor (RH) (current) Angle, Closeout, floor (RH) (superseded)	1
6	106108-204 106108-202	Seal, Angle (RH) (current) Seal, Angle (RH) (superseded)	1

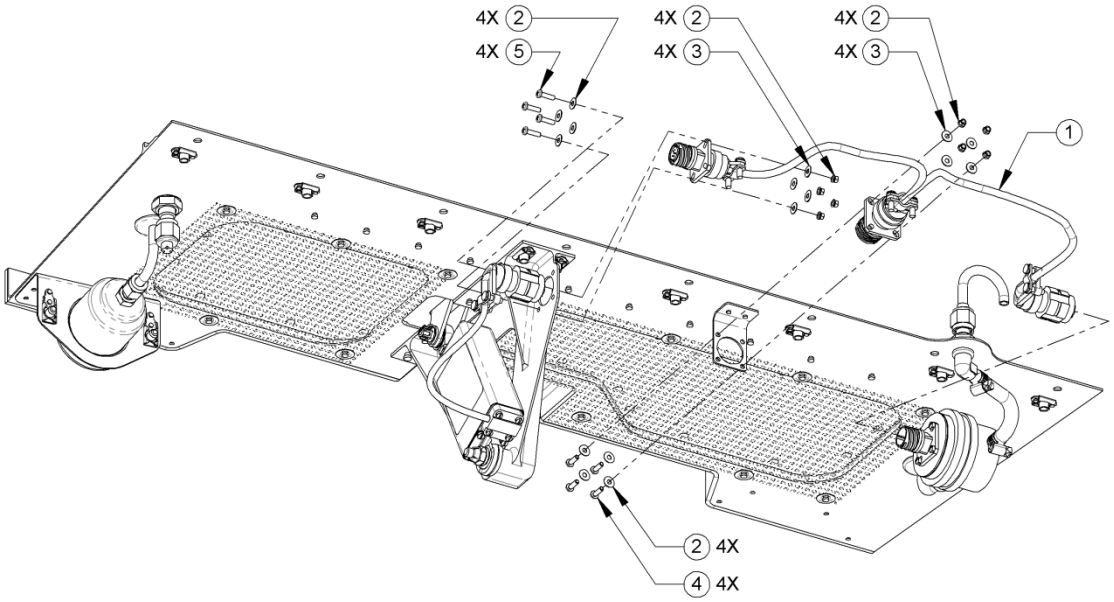

Figure A-6: Wire Harness Assembly Installation

INDEX NUMBER	PART NUMBER	ITEM NAME	UNIT PER ASSY
		FIGURE A-6: Wire Harness Assembly Installation	
1	106401-105 106401-103	Wire Harness Assembly (Current) Wire Harness Assembly (Superseded)	1
2	NAS1149DN416J	Washer	16
3	MS21042L04	Nut	8
4	MS35206-215	Screw	4
5	MS35206-216	Screw	4

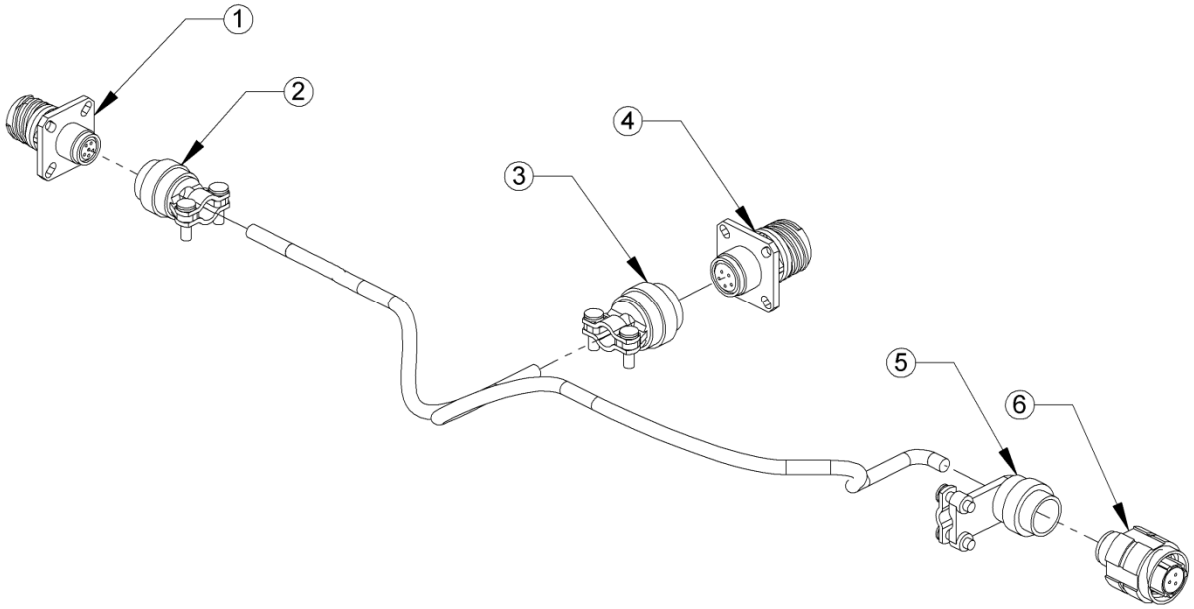

Figure A-7: Wire Harness Assembly

INDEX NUMBER	PART NUMBER	ITEM NAME	UNIT PER ASSY
		FIGURE A-7: Wire Harness Assembly	
1	D38999/20MA35SN	Receptacle	1
2	M85049/38S9W	Backshell	1
3	M85049/38S11W	Backshell	1
4	D38999/20WB5PN	Receptacle	1
5	M85049/39S9W	Backshell	1
6	D38999/26WA98SA	Plug	1

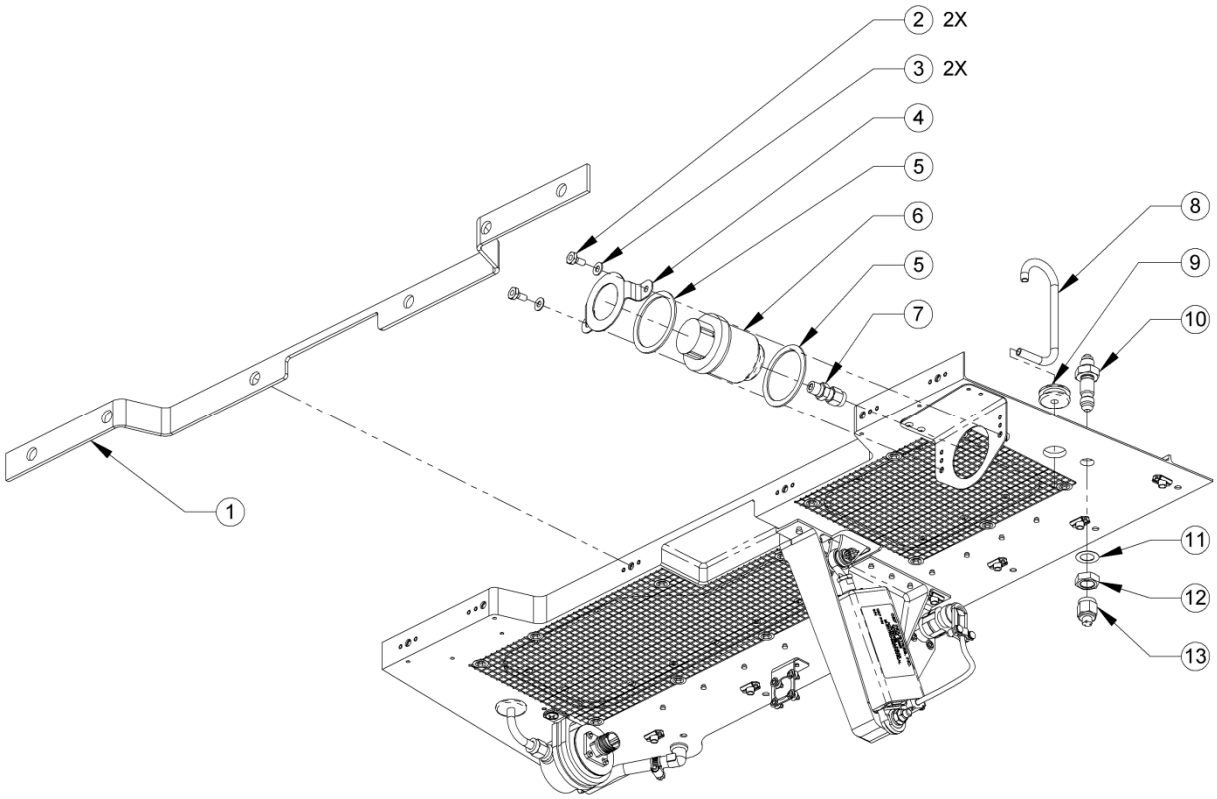

Figure A-8: Firewall Seal and Maintenance Indicator Installation

INDEX NUMBER	PART NUMBER	ITEM NAME	UNIT PER ASSY
		FIGURE A-8: Firewall Seal and Maintenance Indicator Installation	
1	106125-207	Seal, Firewall	1
2	NAS6203-2	Bolt	2
3	NAS1149D0332J	Washer	2
4	100442-201	Retainer, Indicator, Maintenance	1
5	100444-201	Cushion, Indicator, Maintenance	2
6	104441-205	Indicator, Maintenance	1
7	A-400-1-2	Adapter	1
8	106167-201	Tube, Plenum	1
9	MS35489-65	Grommet	1
10	AN832-4D	Union	1
11	NAS1149D0716J	Washer	1
12	AN924-4D	Nut, Jam	1
13	AN929-4	Cap	1

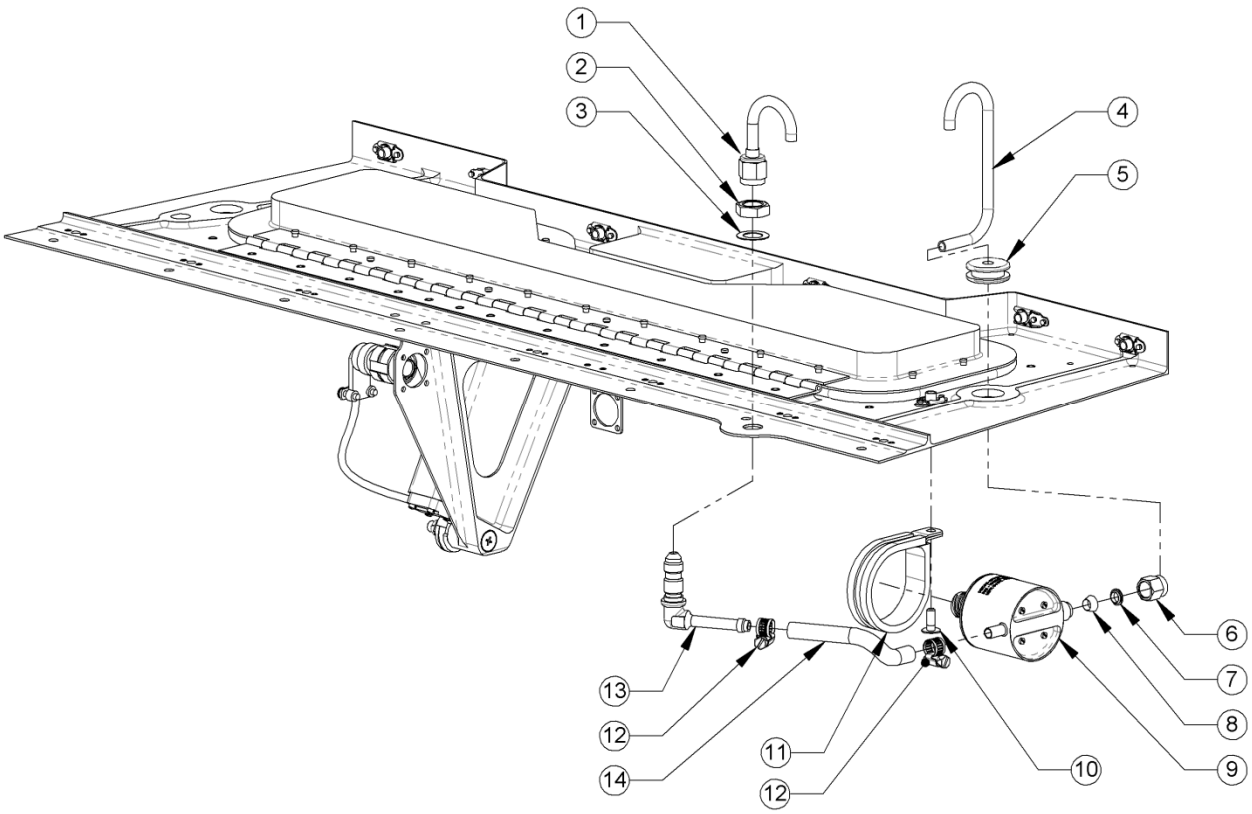

Figure A-9: Differential Pressure Switch Installation

INDEX NUMBER	PART NUMBER	ITEM NAME	UNIT PER ASSY
		FIGURE A-9: Differential Pressure Switch Installation	
1	106115-101	Tube Assembly, Ambient (See Figure 11 for breakdown)	1
2	AN924-4D	Nut, Jam	1
3	NAS1149D0716J	Washer	1
4	106167-201	Tube, Plenum	1
5	MS35489-65	Grommet	1
6	A-402-1	Nut	1
7	A-404-1	Back Ferrule	1
8	A-403-1	Front Ferrule	1
9	100409-101	Delta-P Switch	1
10	AN525-10R8	Bolt	1
11	MS21919WDG28	Clamp	1
12	3604	Clamp, Hose	2
13	106116-201	Hose, Ambient	1
14	AN838-4D	Elbow	1

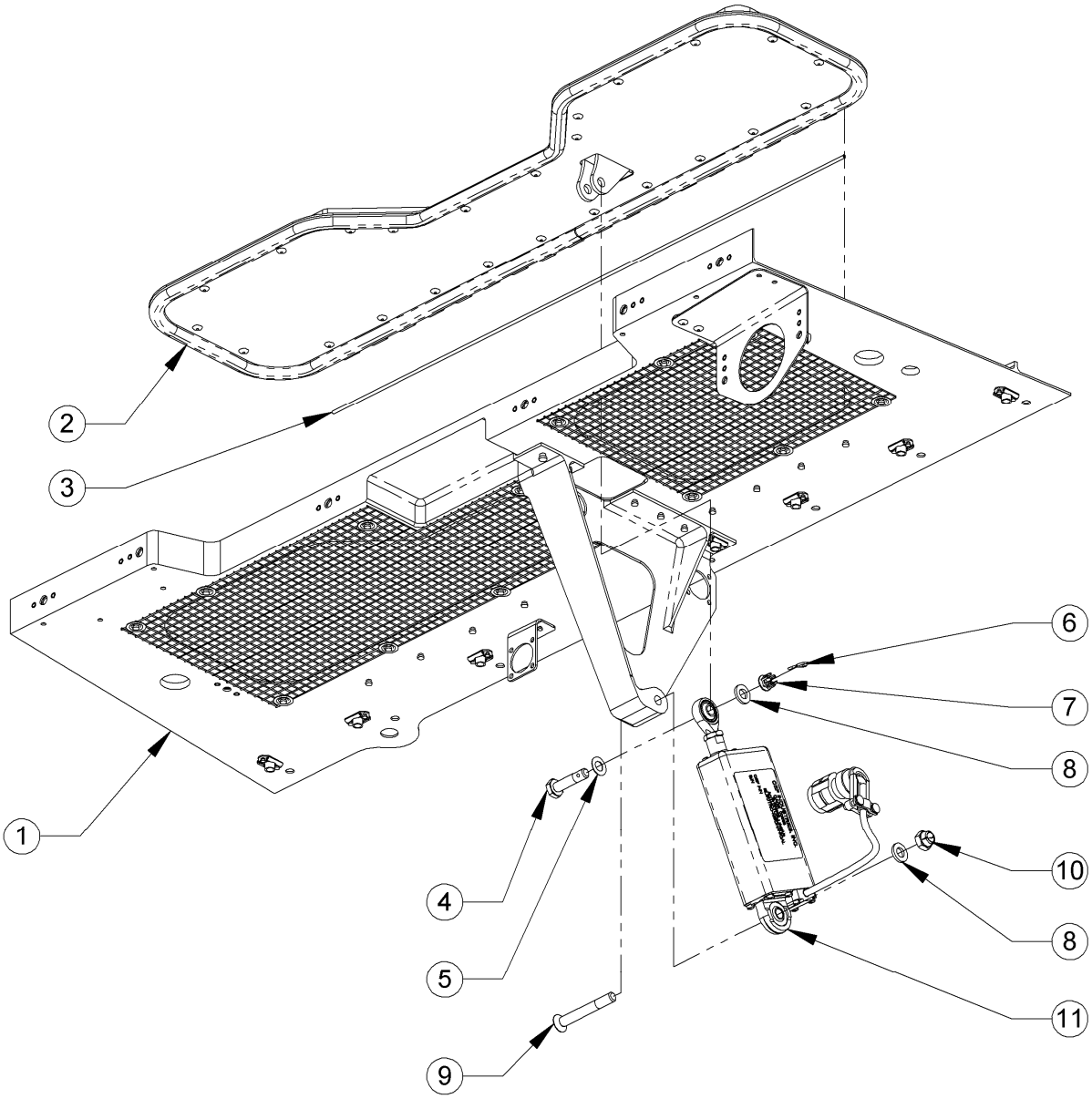

Figure A-10: Bypass Door Assembly and Actuator Installation

INDEX NUMBER	PART NUMBER	ITEM NAME	UNIT PER ASSY
		FIGURE A-10: Bypass Door Assembly and Actuator Installation	
1	106111-101	Floor Assembly	1
2	106120-101	Door Assembly, Bypass	1
3	MS20253-2-1825	Pin	1
4	NAS6204-10D	Bolt	1
5	NAS1149D0416J	Washer	1
6	MS24665-132	Pin, Cotter	1
7	MS14144L4	Nut	1
8	NAS1149D0463J	Washer	2
9	MS246945117	Screw	1
10	MS21045L4	Nut	1
11	106113-203	Actuator	1

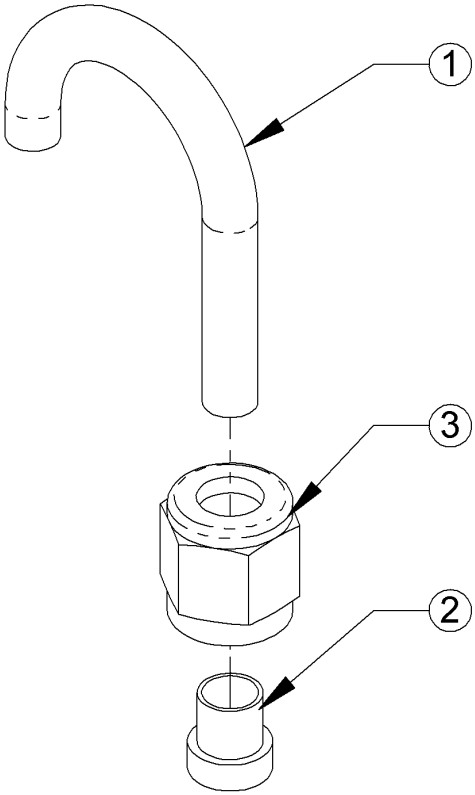

Figure A-11: Ambient Tube Assembly

INDEX NUMBER	PART NUMBER	ITEM NAME	UNIT PER ASSY
		FIGURE A-11: Ambient Tube Assembly	
1	106165-201	Tube, Ambient	1
2	MS20819-4D	Sleeve	1
3	AN818-4D	Nut	1

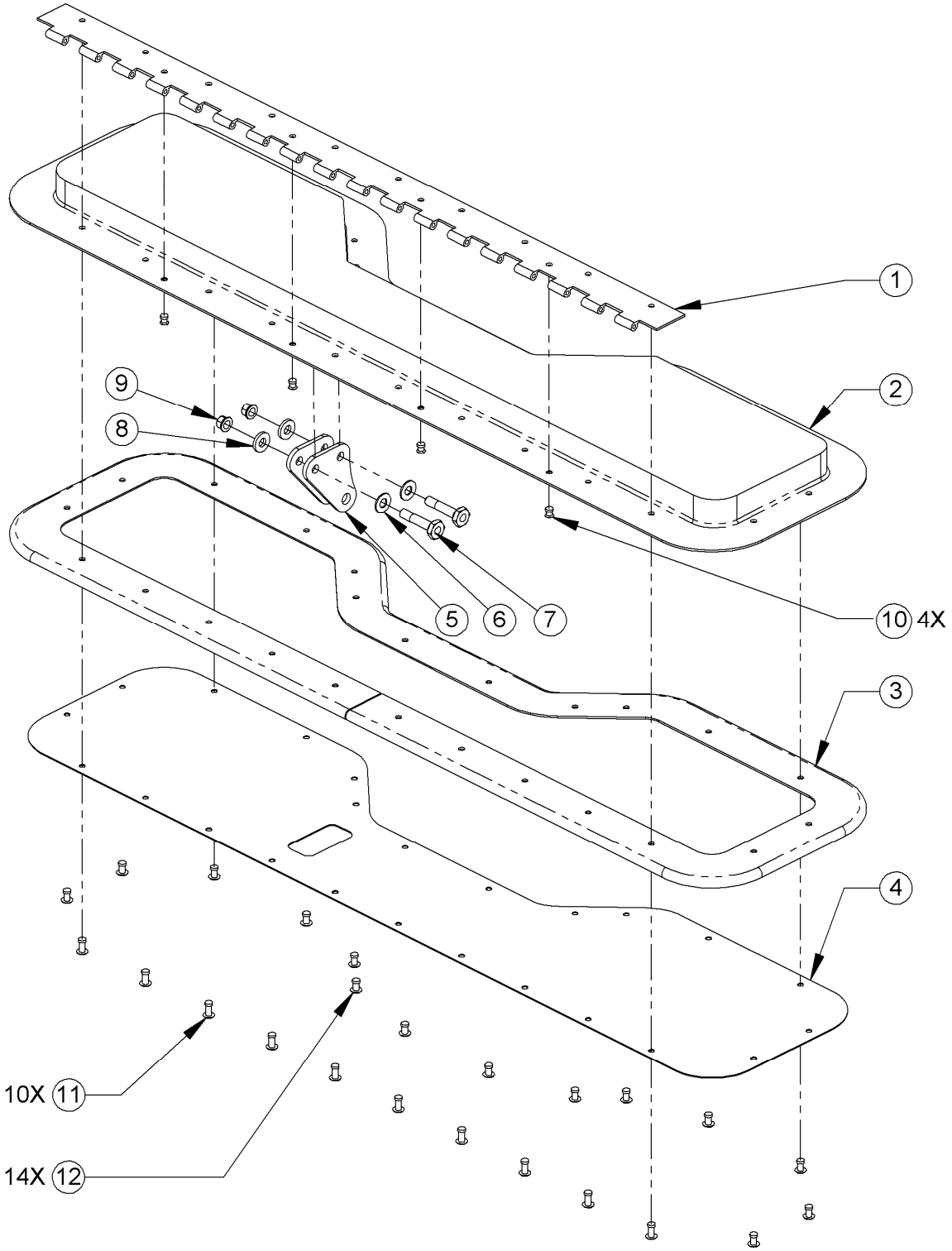

Figure A-12: Bypass Door Assembly

INDEX NUMBER	PART NUMBER	ITEM NAME	UNIT PER ASSY
		FIGURE A-12: Bypass Door Assembly	
1	106124-203	Hinge Half, Door, Bypass	1
2	106121-203	Door, Bypass	1
3	106122-201	Seal, Door, Bypass	1
4	106123-201	Retainer, Seal, Door, Bypass	1
5	106127-201	Plate, Clevis	2
6	NAS1149D0332J	Washer	2
7	NAS6203-10	Bolt	2
8	NAS1149D0363J	Washer	2
9	MS21042L3	Nut	2
10	NAS1097AD4-4	Rivet	4
11	MS20470AD4-6	Rivet	10
12	MS20470AD4-5	Rivet	14

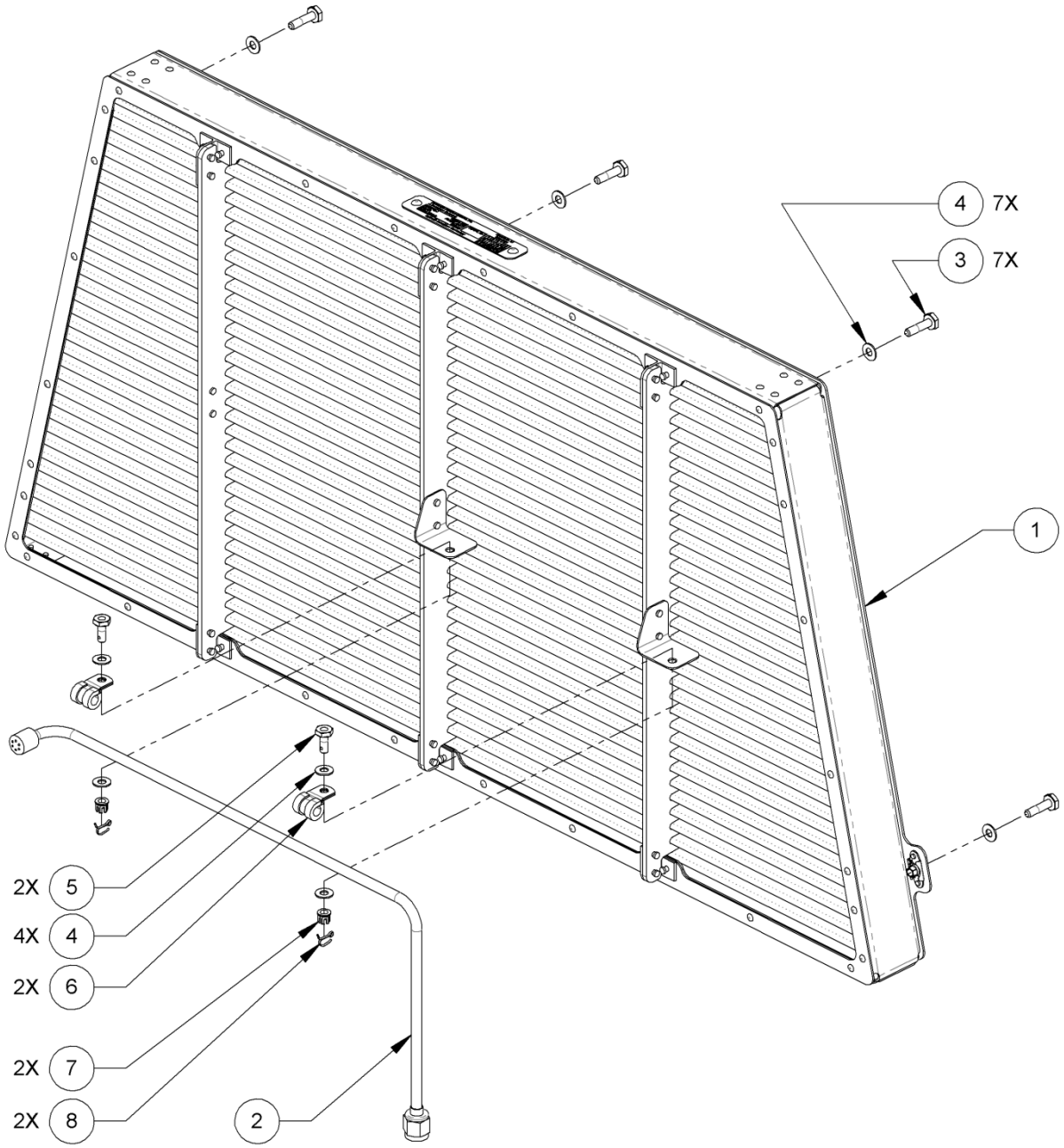

Figure A-13: Filter/Engine Wash Tube Assembly
(Cowl not shown for clarity)

INDEX NUMBER	PART NUMBER	ITEM NAME	UNIT PER ASSY
		FIGURE A-13: Filter/Engine Wash Tube Assembly	
1	106201-103	Filter Assembly	1
2	106202-101	Tube Assembly, Engine Wash	1
3	NAS6203-7	Bolt	7
4	NAS1149D0332J	Washer	11
5	NAS6203-3D	Bolt	2
6	MS21919WDG4	Clamp	2
7	MS14144L3	Nut,Castle	2
8	MS24665-86	Pin, Cotter	2

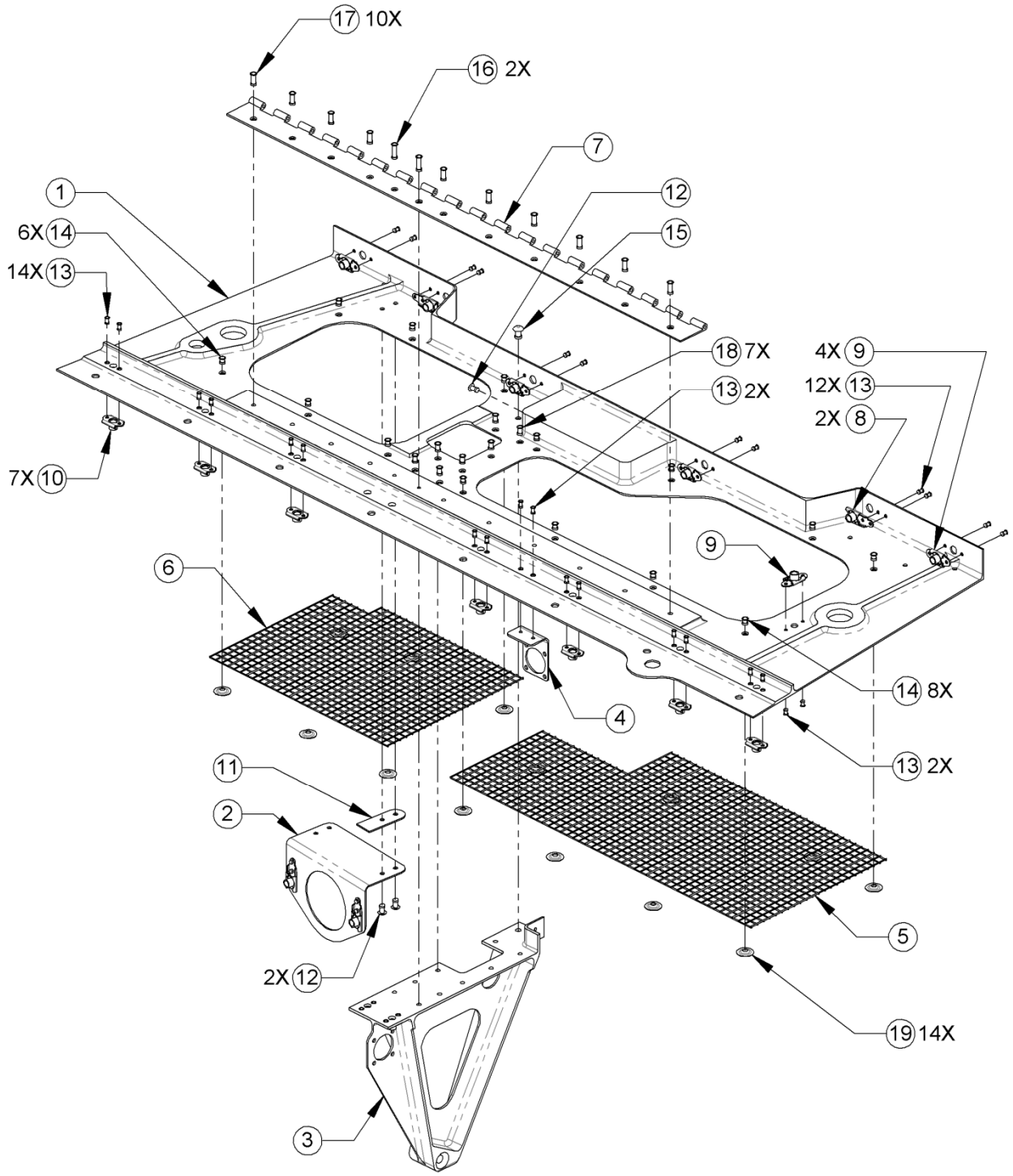

Figure A-14: Floor Assembly

INDEX NUMBER	PART NUMBER	ITEM NAME	UNIT PER ASSY
		FIGURE A-14: Floor Assembly	
1	106161-201 106111-201	Floor (Current) Floor (Superseded)	1
2	106130-101 104442-103	Mount Assy, Indicator, Maint. (Current) (See Figure 15 for breakdown) Mount Assy, Indicator, Maint. (Superseded)	1
3	106112-101	Mount Assy, Actuator	1
4	106133-201	Bracket, Electrical	1
5	106142-201	Screen, Bypass - Large	1
6	106141-201	Screen, Bypass - Small	1
7	106118-201	Hinge, Piano - Floor	1
8	MS21061L3	Platenut	2
9	MS21059L3	Platenut	5
10	MS21075L3N	Platenut	7
11	106126-201	Spacer, Indicator, Maintenance	1
12	MS20470AD4-5	Rivet	3
13	NAS1097A3-3-5	Rivet	30
14	NAS1097AD4-4	Rivet	14
15	MS20470AD5-6	Rivet	1
16	NAS1097AD4-8-5	Rivet	2
17	NAS1097AD4-7	Rivet	10
18	NAS1097AD4-5	Rivet	7
19	A3236-6	Washer	14

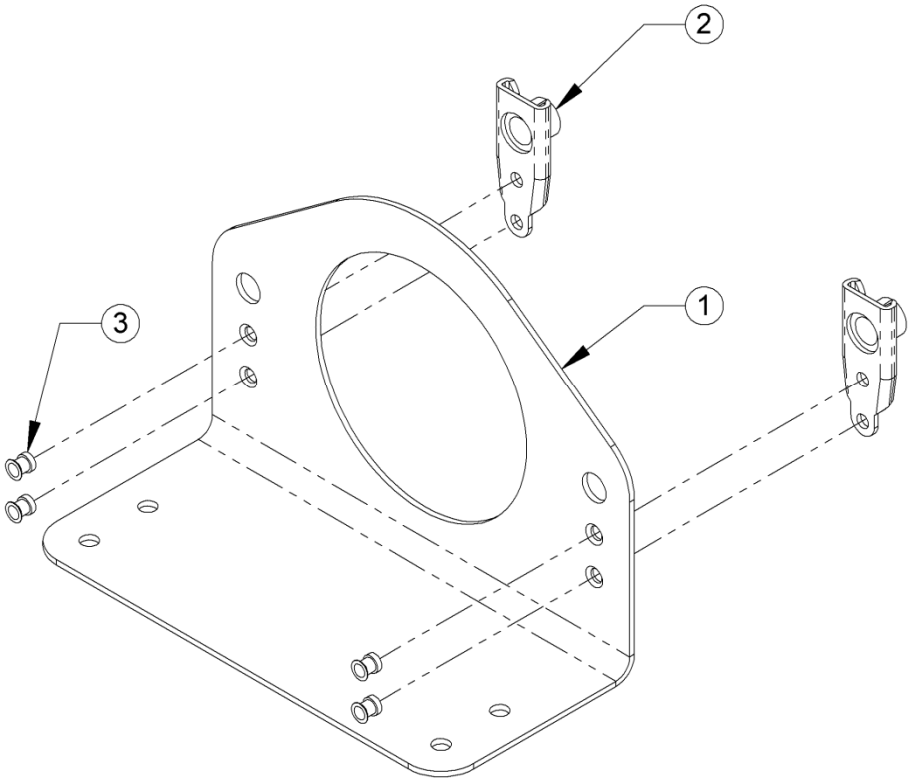

Figure A-15: Maintenance Indicator Mount Assembly

INDEX NUMBER	PART NUMBER	ITEM NAME	UNIT PER ASSY
		FIGURE A-15: Maintenance Indicator Mount Assembly	
1	106131-201 104442-205	Mount, Indicator, Maintenance (Current) Mount, Indicator, Maintenance (Superseded)	1
2	MS21061L3	Platenut	2
3	NAS1097AD3-3	Rivet	4

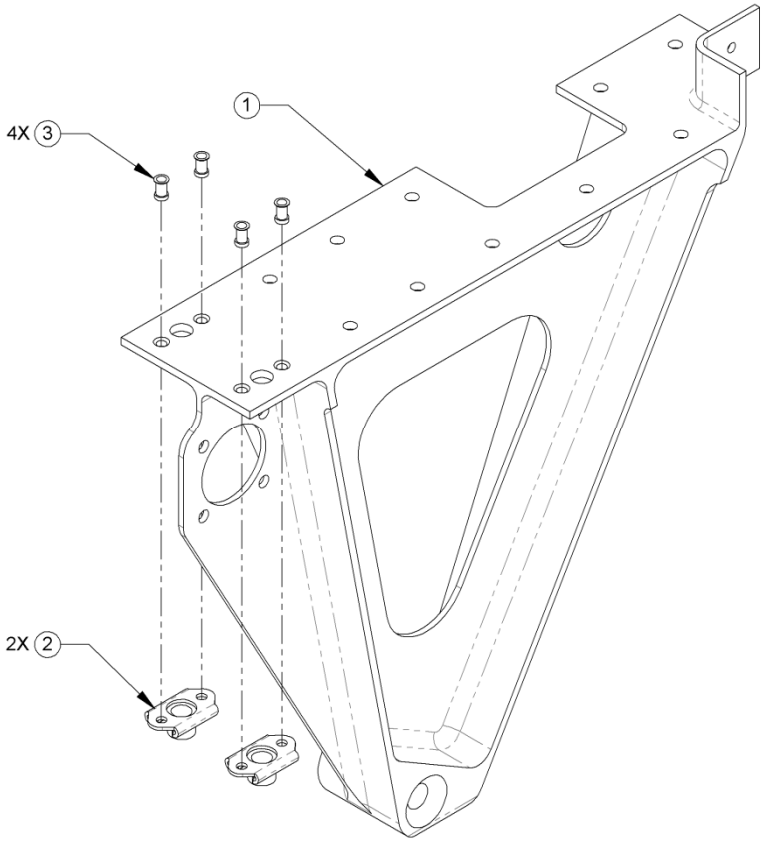

Figure A-16: Actuator Mount Assembly

INDEX NUMBER	PART NUMBER	ITEM NAME	UNIT PER ASSY
		FIGURE 16: Actuator Mount Assembly	
1	106162-201 106112-203	Mount, Actuator (Current) Mount, Actuator (Superseded)	1
2	MS21075L3N	Platenut	2
3	NAS1097AD3-4	Rivet	4

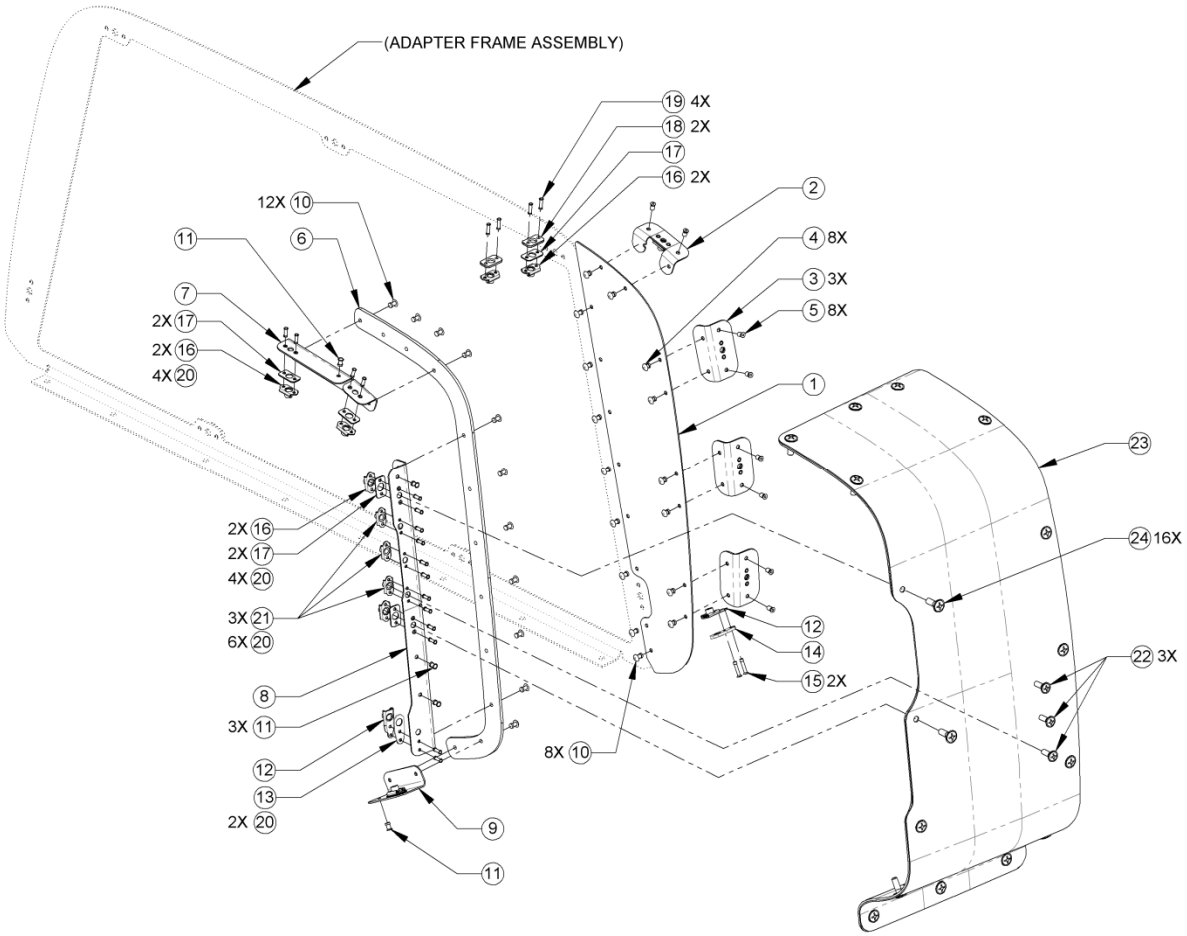

Figure A-17: Access Door Kit Installation
(Cowl not shown for clarity)

INDEX NUMBER	PART NUMBER	ITEM NAME	UNIT PER ASSY
		FIGURE A-17: Cowl Modification/Access Door Installation	
1	106302-201	Plate, Sill, Door, Access - FWD	1
2	106304-101	Angle Assy, Sill, Door, Access – FWD, UPR (See Figure 20 for breakdown)	1
3	106305-101	Angle Assy, Sill, Door, Access – FWD, LWR (See Figure 19 for breakdown)	3
4	MS20470AD4-4	Rivet	8
5	CR3214-4-2	Rivet, Blind	8
6	106303-203	Plate, Sill, Door, Access – AFT	1
7	106306-203	Angle, Sill, Door, Access – AFT, UPR	1
8	106307-205	Angle, Sill, Door, Access – AFT, MID	1
9	106308-101	Angle Assy, Sill, Door, Access – AFT, LWR (See Figure 18 for breakdown)	1
10	MS20470AD4-5	Rivet	20
11	NAS1097AD4-5	Rivet	5
12	MS21061L3	Platenut	2
13	NAS463YDD10M	Shim	1
14	NAS463YDD10H	Shim	1
15	MS20605R3W7	Rivet	2
16	MS21075L3N	Platenut	6
17	NAS1195D3XM	Shim	5
18	NAS1195D3XH	Shim	2
19	NAS1097AD3-7	Rivet	4
20	NAS1097AD3-6	Rivet	16
21	MS21075L08N	Platenut	3
22	AN525-832R9	Screw	3
23	106310-101	Access Door Assembly (See Figure 21 for breakdown)	1
24	AN525-10R10	Screw	16

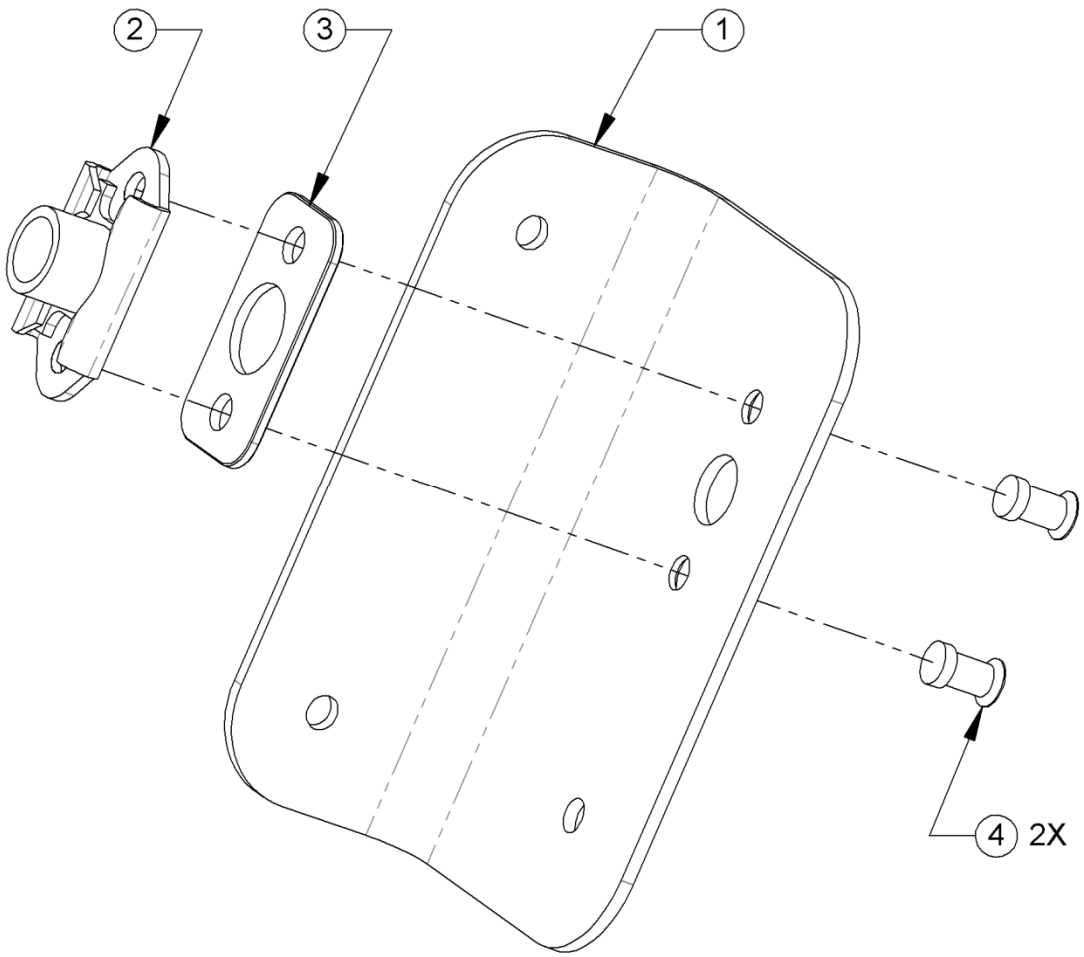

Figure A-18: Angle Assembly, Sill, Door, Access – AFT, LWR

INDEX NUMBER	PART NUMBER	ITEM NAME	UNIT PER ASSY
		FIGURE A-18: Angle Assembly, Sill, Door – Aft,Lower	
1	106309-201 106308-201	Angle, Sill, Door – AFT, LWR (current) Angle, Sill, Door – AFT, LWR (superseded)	1
2	MS21075L3N	Platenut	1
3	NAS1195D3XM	Shim	1
4	NAS1097AD3-4	Rivet	2

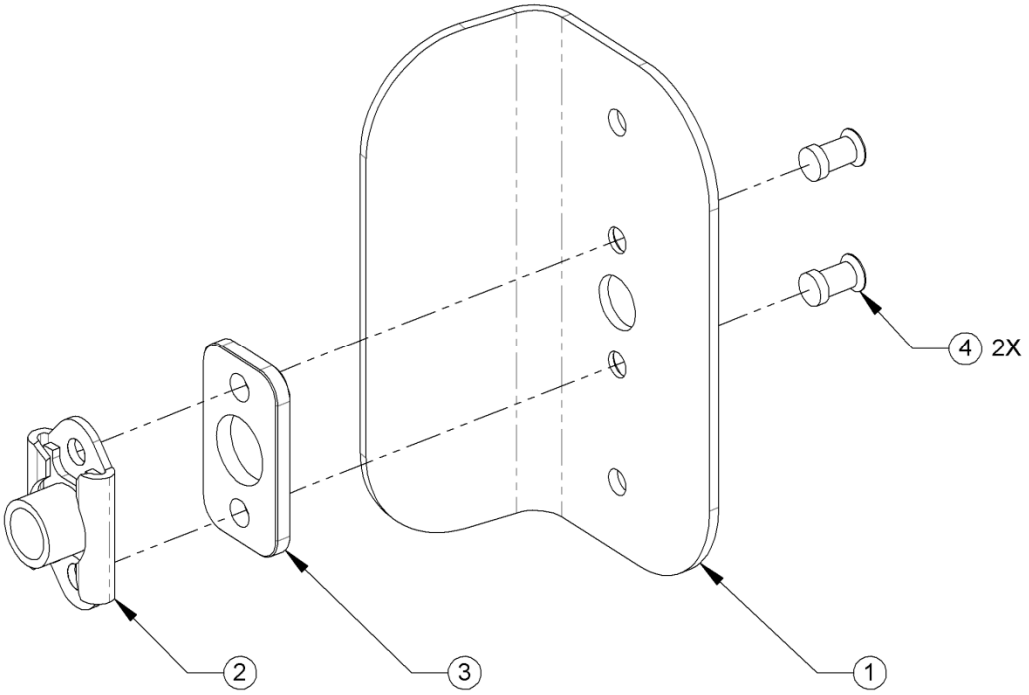

Figure A-19: Angle Assembly, Sill, Door, Access – FWD, LWR

INDEX NUMBER	PART NUMBER	ITEM NAME	UNIT PER ASSY
		FIGURE A-19: Angle Assembly, Sill, Door – Forward, Lower	
1	106316-201 106305-201	Angle, Sill, Door - Fwd, Upr (Current) Angle, Sill, Door - Fwd, Upr (Superseded)	1
2	MS21075L3N	Platenut	1
3	NAS1195D3XH	Shim	1
4	NAS1097AD3-4-5	Rivet	2

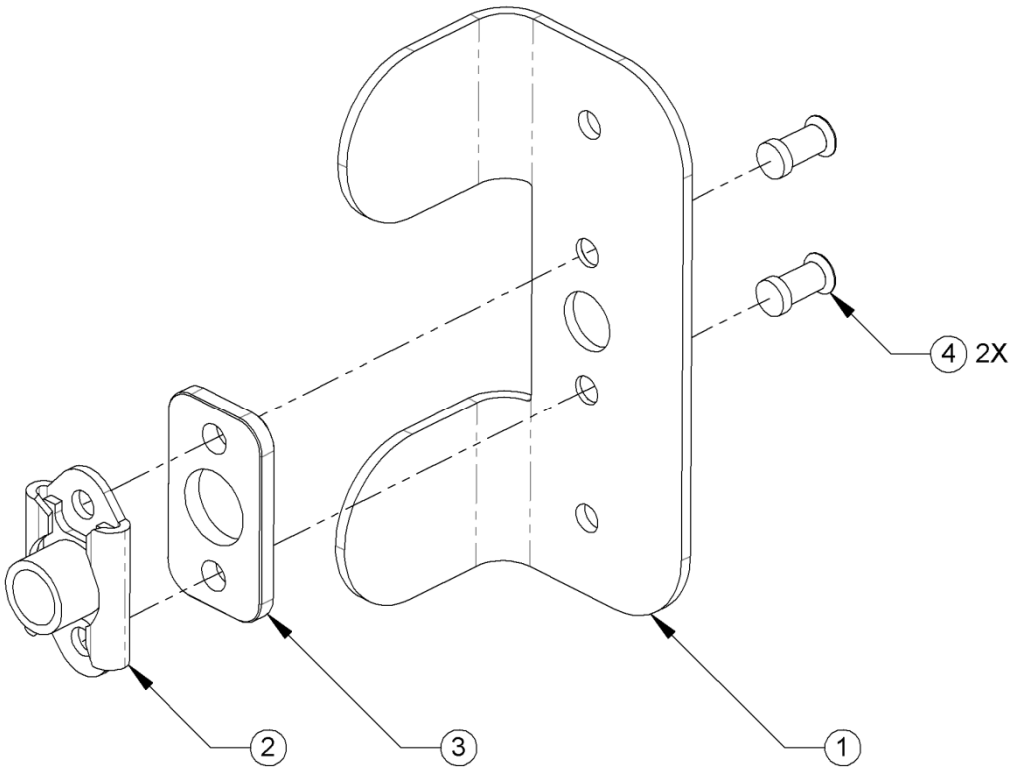

Figure A-20: Angle Assembly, Sill, Door, Access – FWD, UPR

INDEX NUMBER	PART NUMBER	ITEM NAME	UNIT PER ASSY
		FIGURE A-20: Angle Assembly, Sill, Door – Forward, Upper	
1	106314-201 106304-203	Angle, Sill – Forward, Upper (current) Angle, Sill – Forward, Upper (superseded)	1
2	MS21075L3N	Platenut	1
3	NAS1195D3XH	Shim	1
4	NAS1097AD3-4-5	Rivet	2

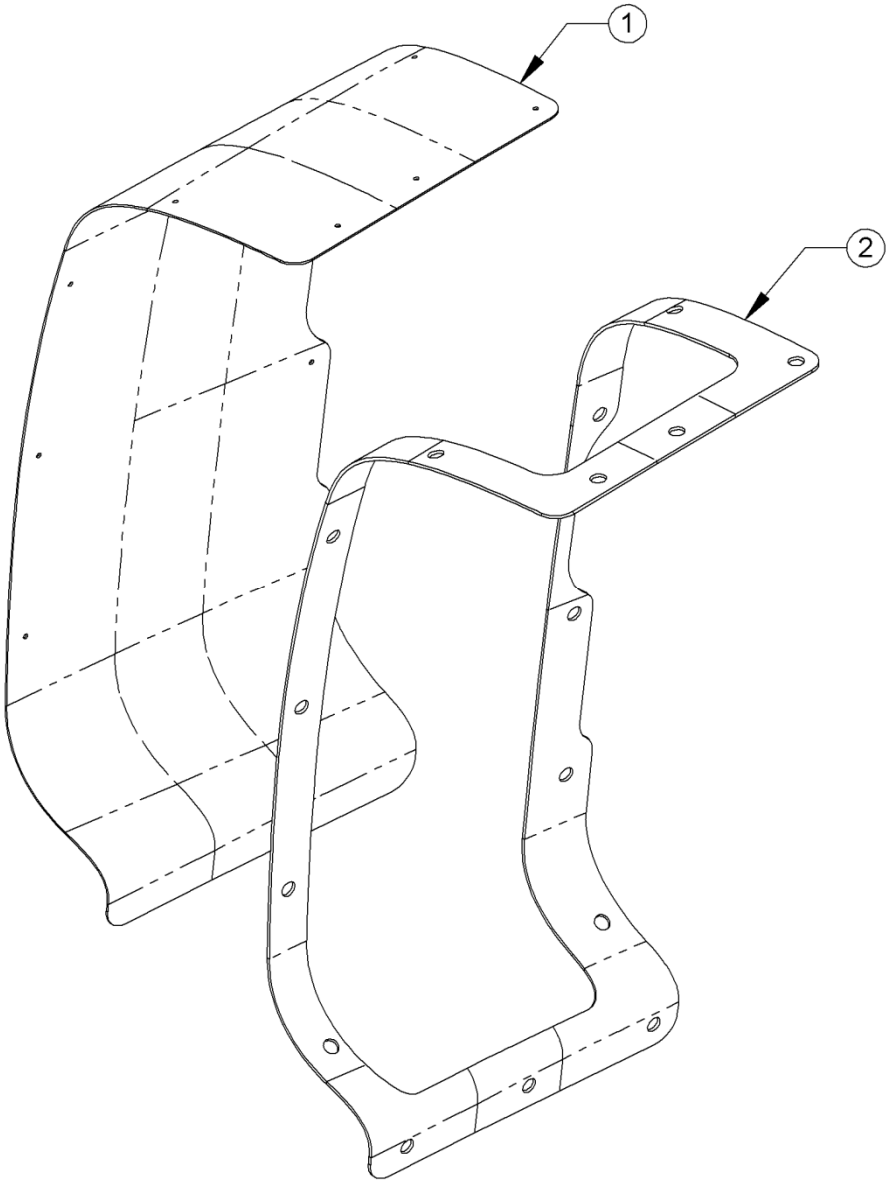

Figure A-21: Access Door Assembly

INDEX NUMBER	PART NUMBER	ITEM NAME	UNIT PER ASSY
		FIGURE 21: Access Door Assembly	
1	106311-201 106310-201	Door, Access (current) Door, Access (superseded)	1
2	106312-205	Seal, Door, Access	1

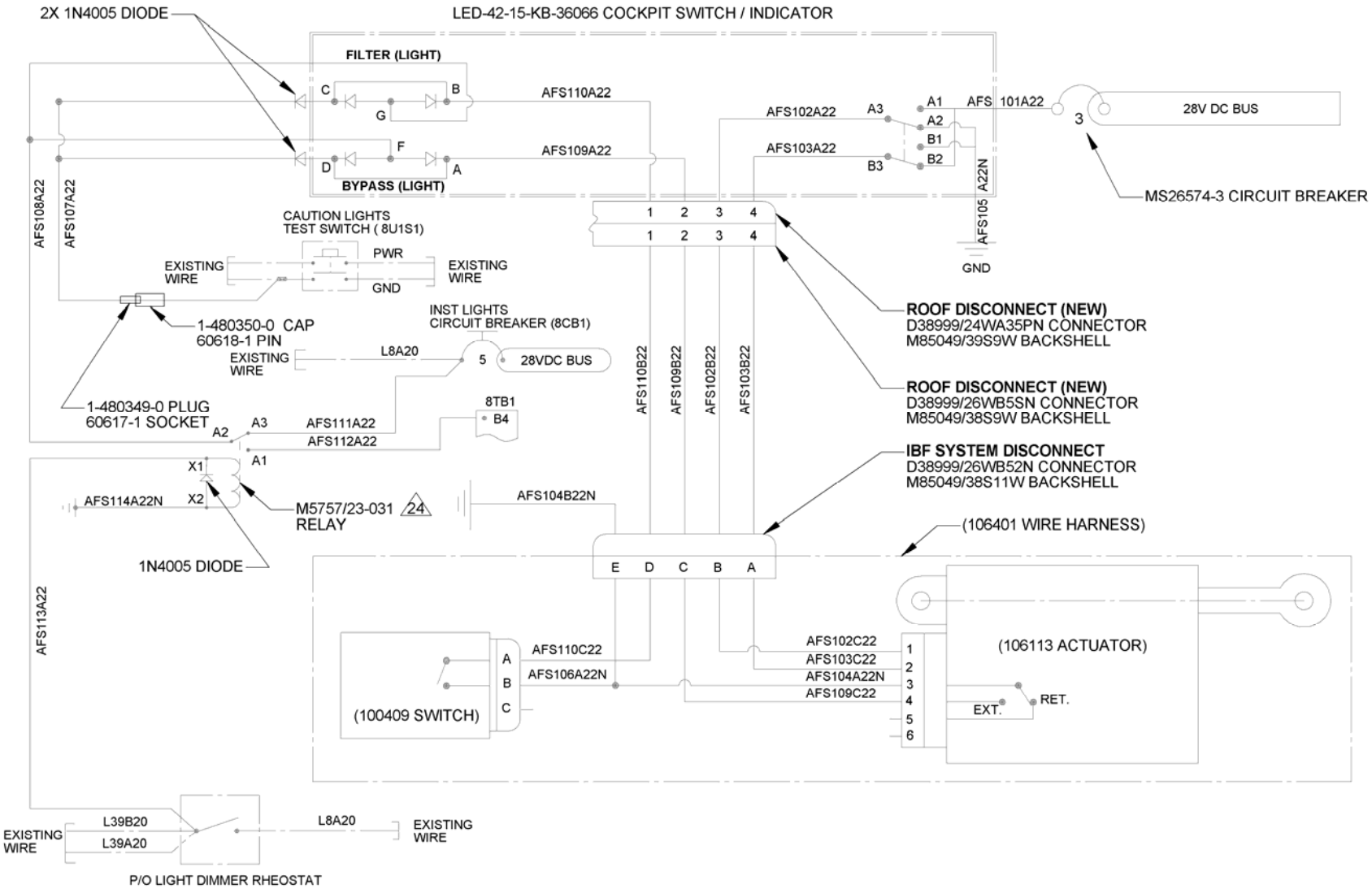

Figure A-22: 106400-103 Electrical System Installation Schematic

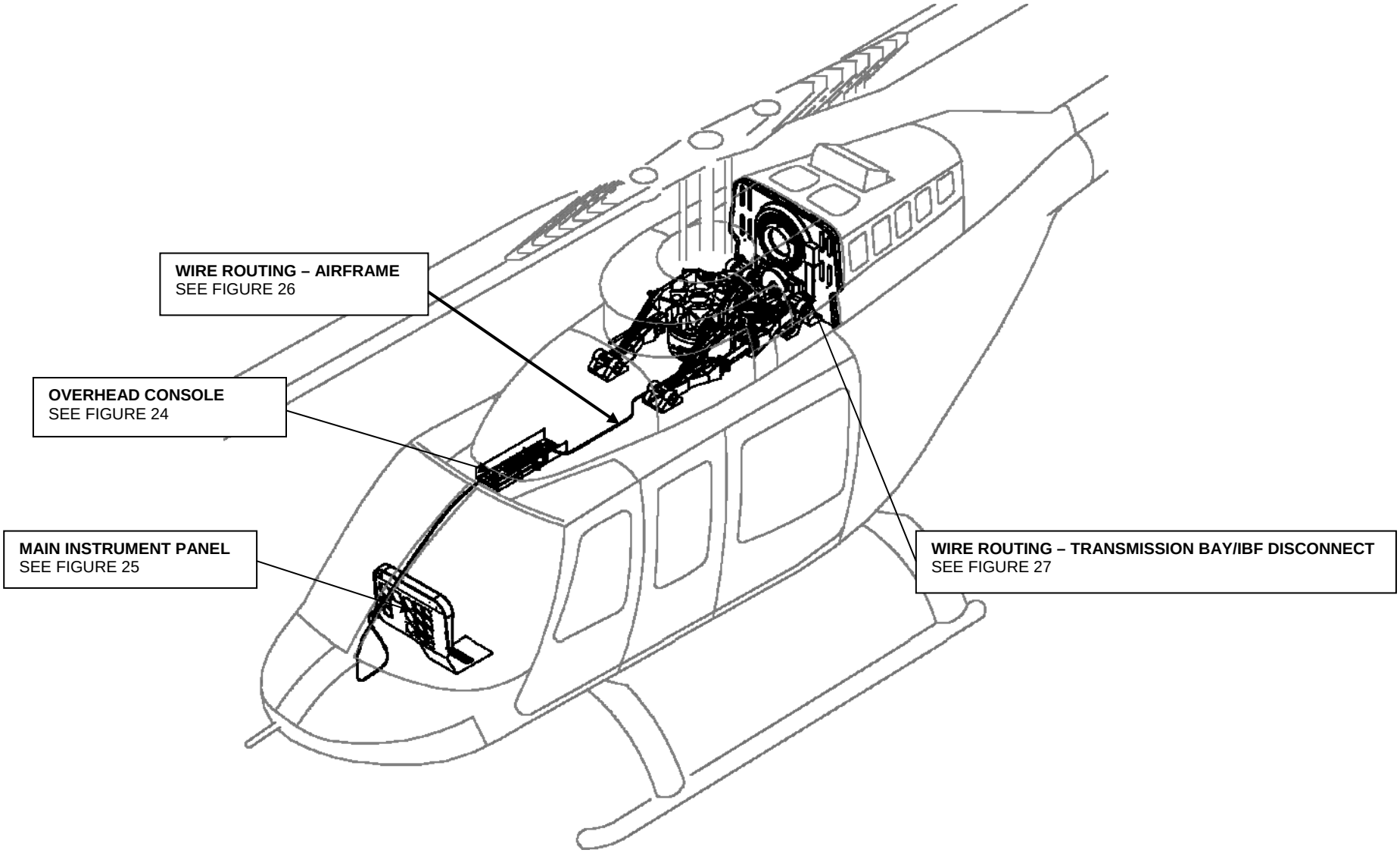

Figure A-23: 106400-103 Electrical System Installation

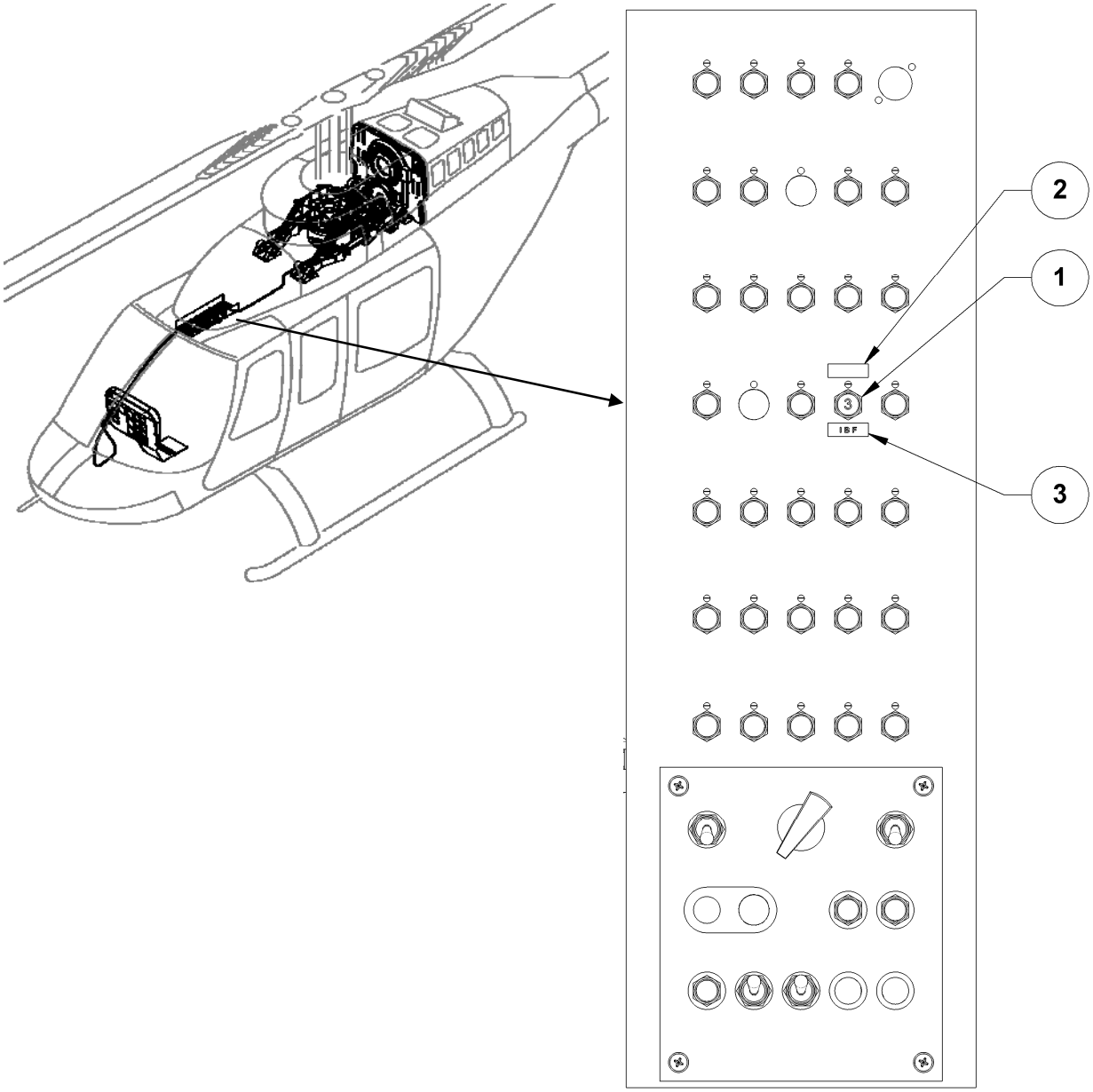

Figure A-24: Overhead Console

INDEX NUMBER	PART NUMBER	ITEM NAME	UNIT PER ASSY
		FIGURE: A-24. Overhead Console	
1	MS26574-3	Circuit Breaker	1
2	100375-237	Placard (blank)	1
3	100375-233	Placard – “IBF”	2

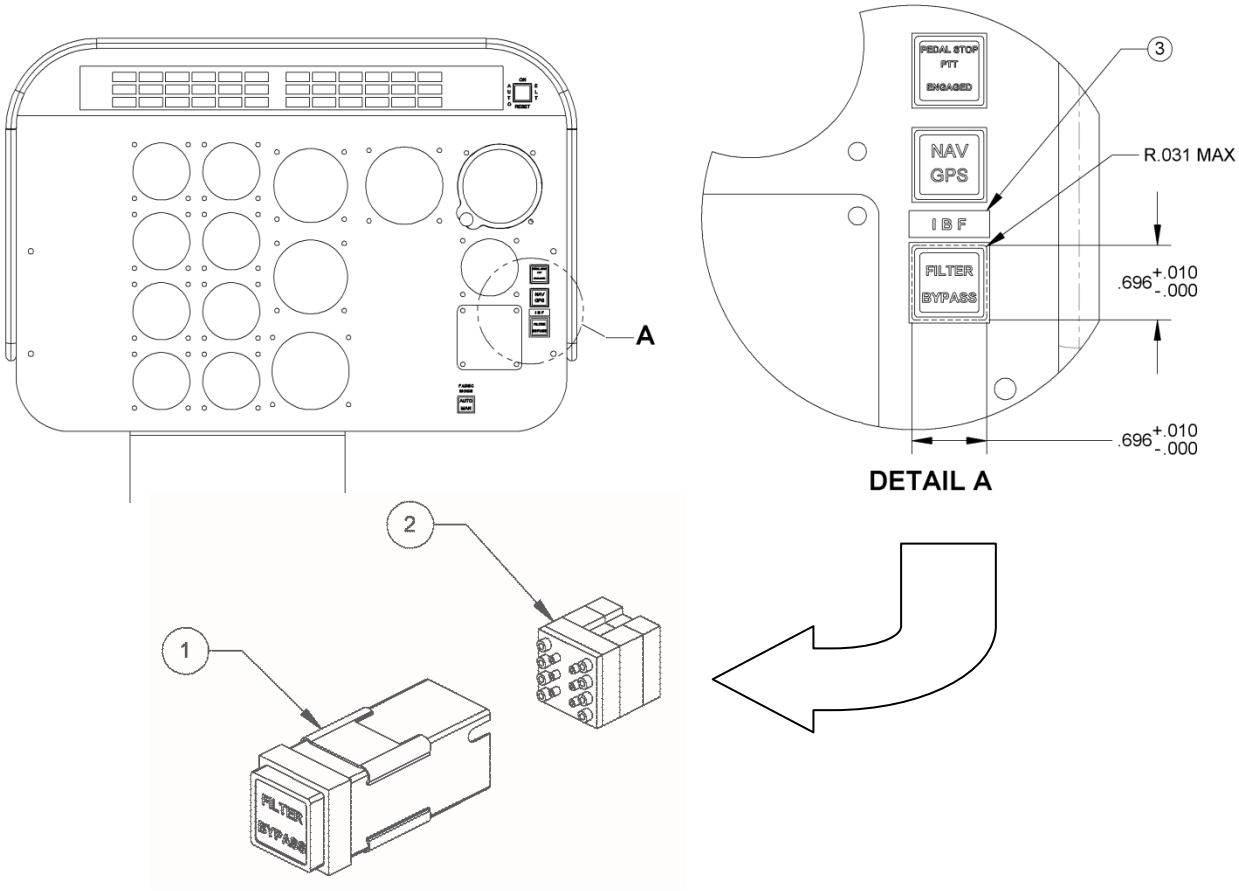

Figure A-25: Cockpit Switch/Indicator Installation

INDEX NUMBER	PART NUMBER	ITEM NAME	UNIT PER ASSY
		FIGURE A-25: Cockpit Switch/Indicator Installation	
1	LED-42-15-KB-36066	Cockpit Switch/Indicator (used on 407)	1
2	18-200	Connector	1
3	100375-233	Placard “IBF”	1
4	M85049/22-192	Socket (Not Shown)	10

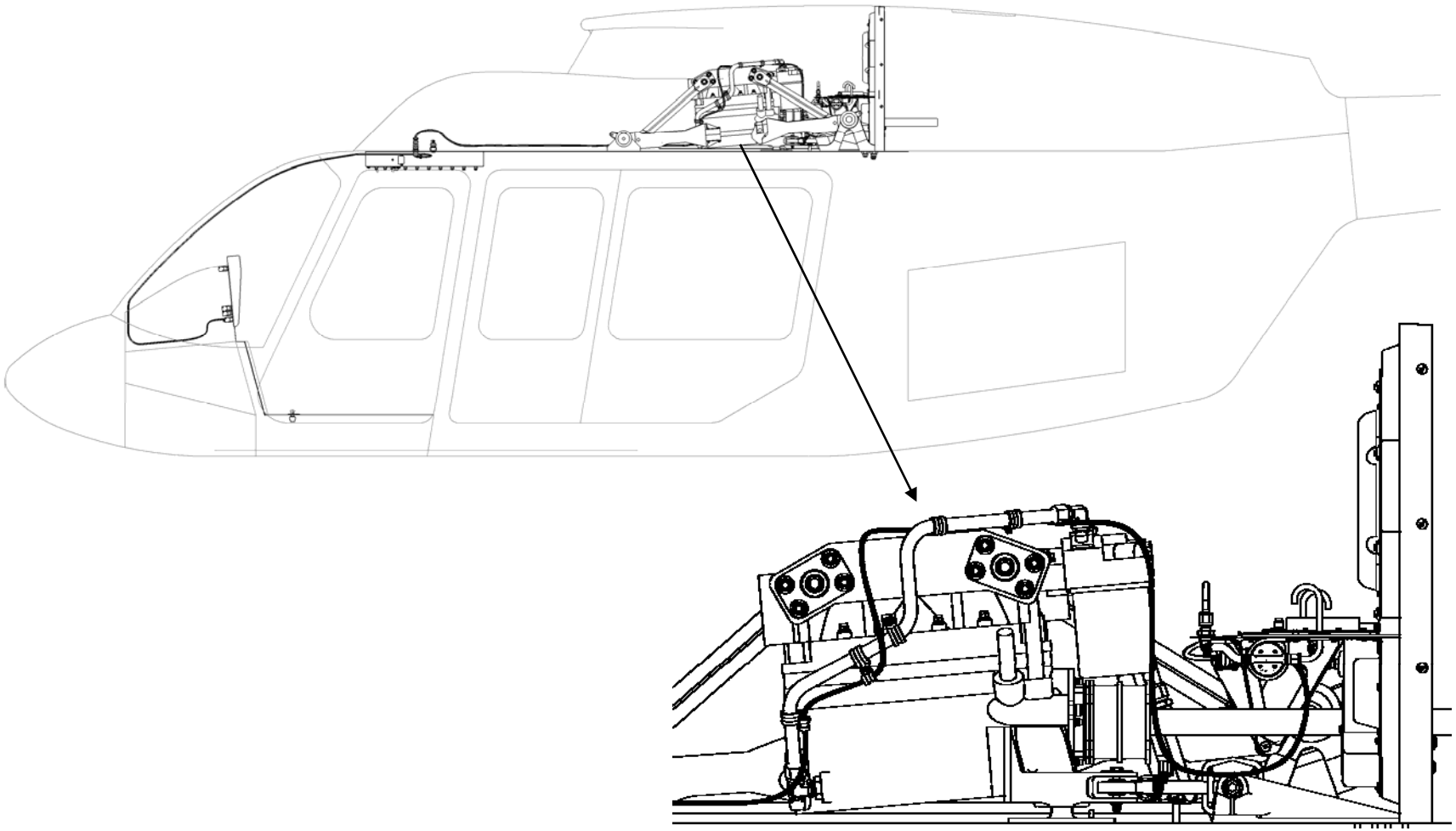

Figure A-26: Wire Routing – LKG INBD, LH Side
(Air Inlet Cowl Assembly Not Shown For Clarity)

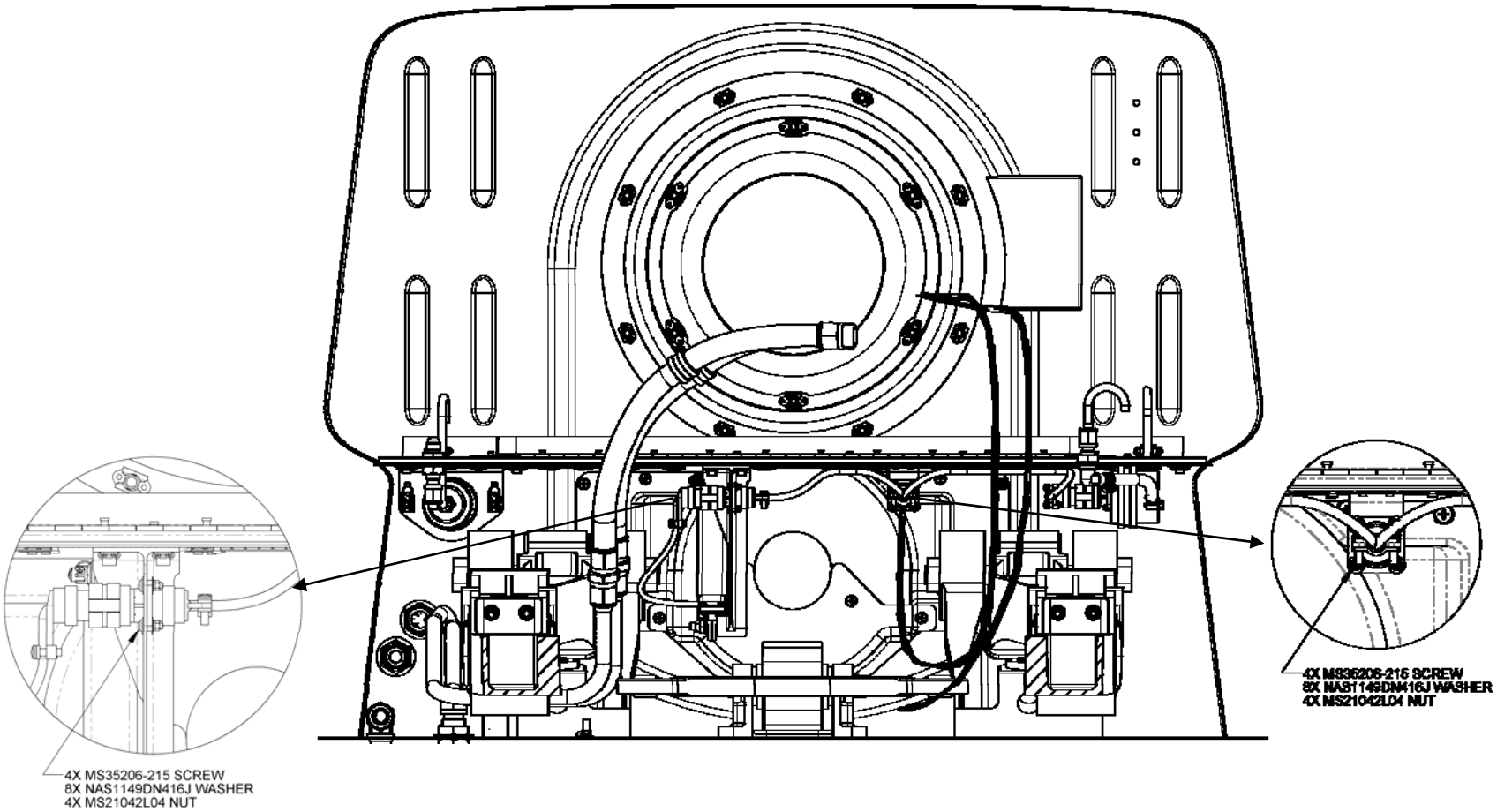

Figure A-27: Wire Routing - : IBF Wiring – LKG AFT
(Transmission not shown for clarity)

ICA APPENDIX B – PARTS FIGURES FOR BELL 206L (C30), 206L-3, 206L-4 WITH COMPOSITE COWL

TABLE OF FIGURES

Figure B-1:106000-111 IBF System Kit – Major Components 2
Figure B-2: Adapter Frame, Floor & Closeout Angle Installation 4
Figure B-3: Cowl Forward Lip Modification 6
Figure B-4: Filter Adapter Frame Assembly 7
Figure B-5: Floor Closeout Angle Assembly 8
Figure B-6: Wire Harness Assembly Installation 9
Figure B-7: Wire Harness Assembly 10
Figure B-8: Firewall Seal and Maintenance Indicator Installation 11
Figure B-9: Differential Pressure Switch Installation 13
Figure B-10: Bypass Door Assembly and Actuator Installation 15
Figure B-11: Ambient Tube Assembly 17
Figure B-12: Bypass Door Assembly 18
Figure B-13: Filter/Engine Wash Tube Assembly 20
Figure B-14: Floor Assembly 22
Figure B-15: Maintenance Indicator Mount Assembly 24
Figure B-16: Actuator Mount Assembly 25
Figure B-17: Access Door Kit Installation 26
Figure B-18: Angle Assembly, Sill, Door, Access – AFT, LWR 28
Figure B-19: Angle Assembly, Sill, Door, Access – FWD, LWR 29
Figure B-20: Angle Assembly, Sill, Door, Access – FWD, UPR 30
Figure B-21: Access Door Assembly 31
Figure B-22: 106400-103 Electrical System Installation Schematic 32
Figure B-23: 106400-103 Electrical System Installation Schematic 33
Figure B-24: Overhead Console 34
Figure B-25: Cockpit Switch/Indicator Installation 35
Figure B-26: Wire Routing – LKG INBD, LH Side 36

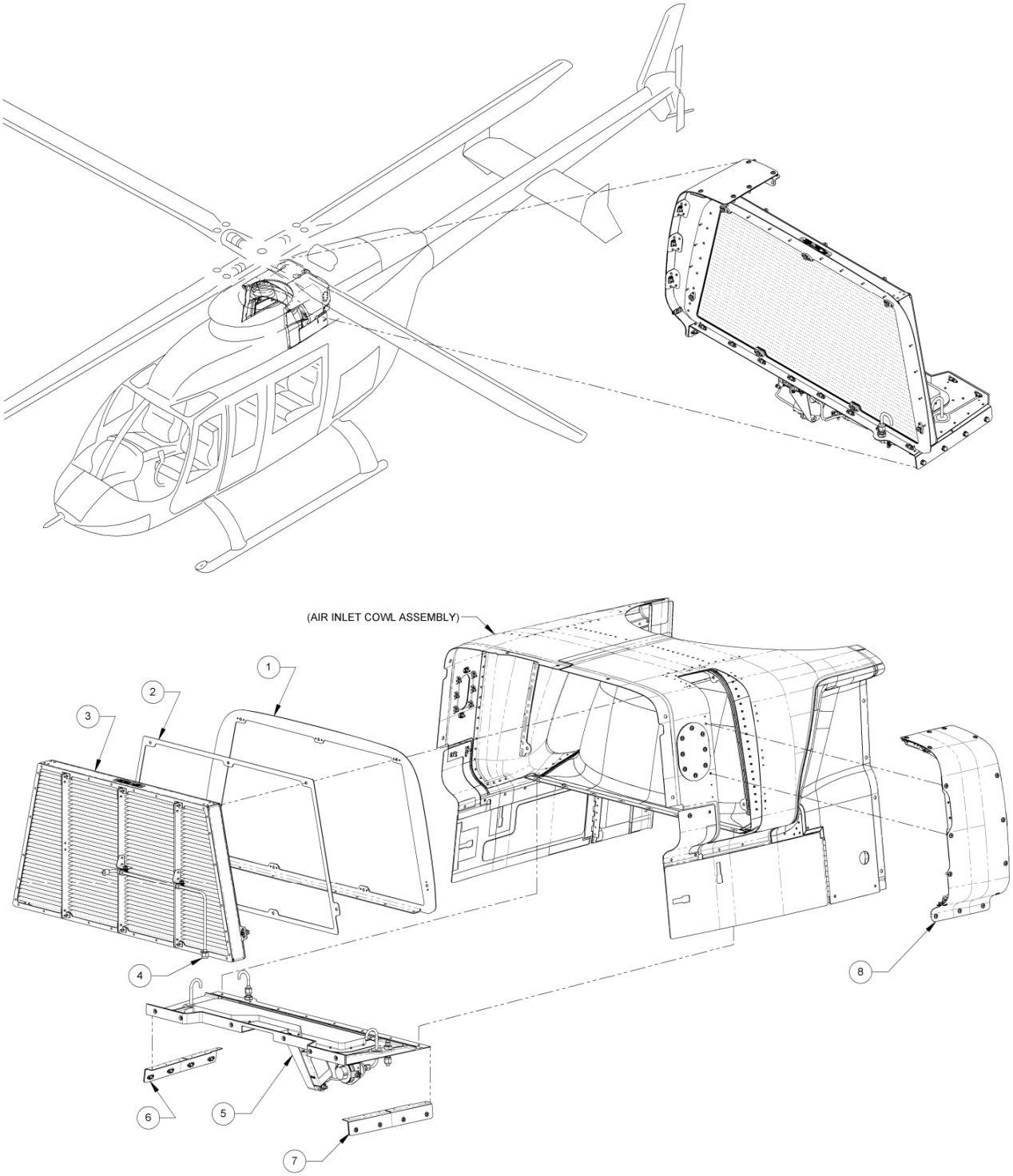

Figure B-1:106000-111 IBF System Kit – Major Components

INDEX NUMBER	PART NUMBER	ITEM NAME	UNIT PER ASSY
		FIGURE B-1: IBF System & Access Door Installation	
1	106102-103	Frame Assembly, Adapter, Filter (See Figure 4 for breakdown)	1
2	106219-205	Seal, Filter	1
3	106200-101	Filter Assembly (See Figure 13 for breakdown)	1
4	106202-101	Engine Wash Tube Assembly (See Figure 13 for breakdown)	1
5	106110-101	Bypass Floor Assembly (See Figure 6,8,9,10 for breakdown)	1
6	106103-103	Angle Assembly - LH (See Figure 5 for breakdown)	1
7	106103-104	Angle Assembly – RH (See Figure 5 for breakdown)	1
8	106301-101	Access Door Installation (See Figure 17 for breakdown)	1

*AN929-8J Cap used on initial installation to cap bleed air line.

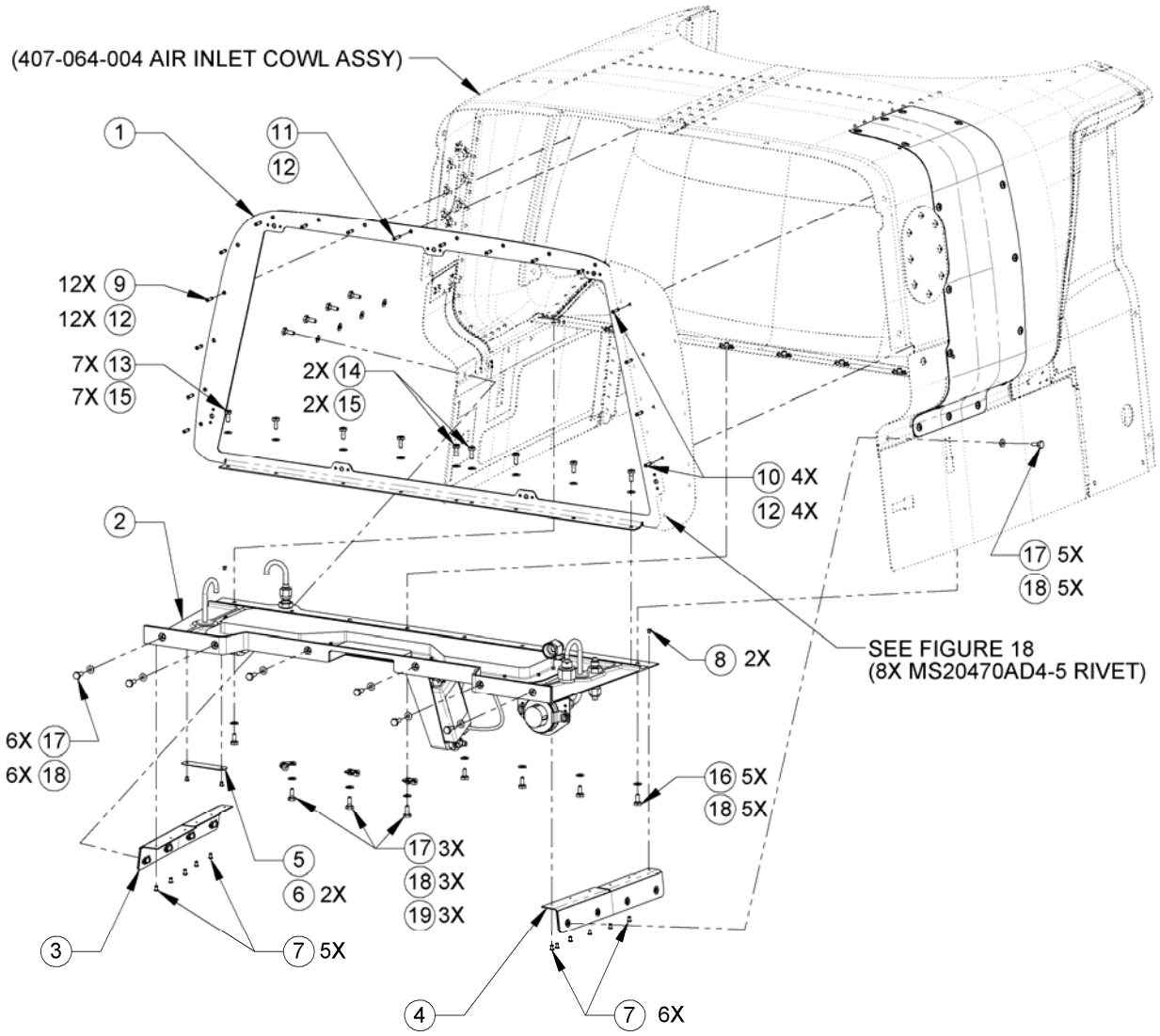

Figure B-2: Adapter Frame, Floor & Closeout Angle Installation

INDEX NUMBER	PART NUMBER	ITEM NAME	UNIT PER ASSY
		FIGURE B-2: Adapter Frame, Floor & Closeout Angle Installation	
1	106102-103	Adapter Frame Assembly (See Figure 4 for breakdown)	1
2	106110-101	Bypass Floor Assembly (See Figure 6, 8, 9 & 10 for breakdown)	1
3	106103-103	Closeout Angle Assembly (See Figure 5 for breakdown)	1
4	106103-104	Closeout Angle Assembly (See Figure 5 for breakdown)	1
5	106119-207 106119-209	Data Plate (used on -107) Data Plate (used on -109)	1 1
6	MS20470AD4-4	Rivet	2
7	MS20470AD4-5	Rivet	13
8	MS20426AD4-5	Rivet	2
9	MS21140S04-06	Rivet	12
10	MS21140S04-07	Rivet	4
11	MS21140S04-08	Rivet	1
12	AN620-5	Washer	18
13	NAS6203-3	Bolt	7
14	NAS6203-4	Bolt	2
15	NAS1149D0316J	Washer	9
16	AN3C3A	Bolt	5
17	AN3C4A	Bolt	14
18	NAS1149C0332R	Washer	19
19	MS21919WDG2	Clamp	3

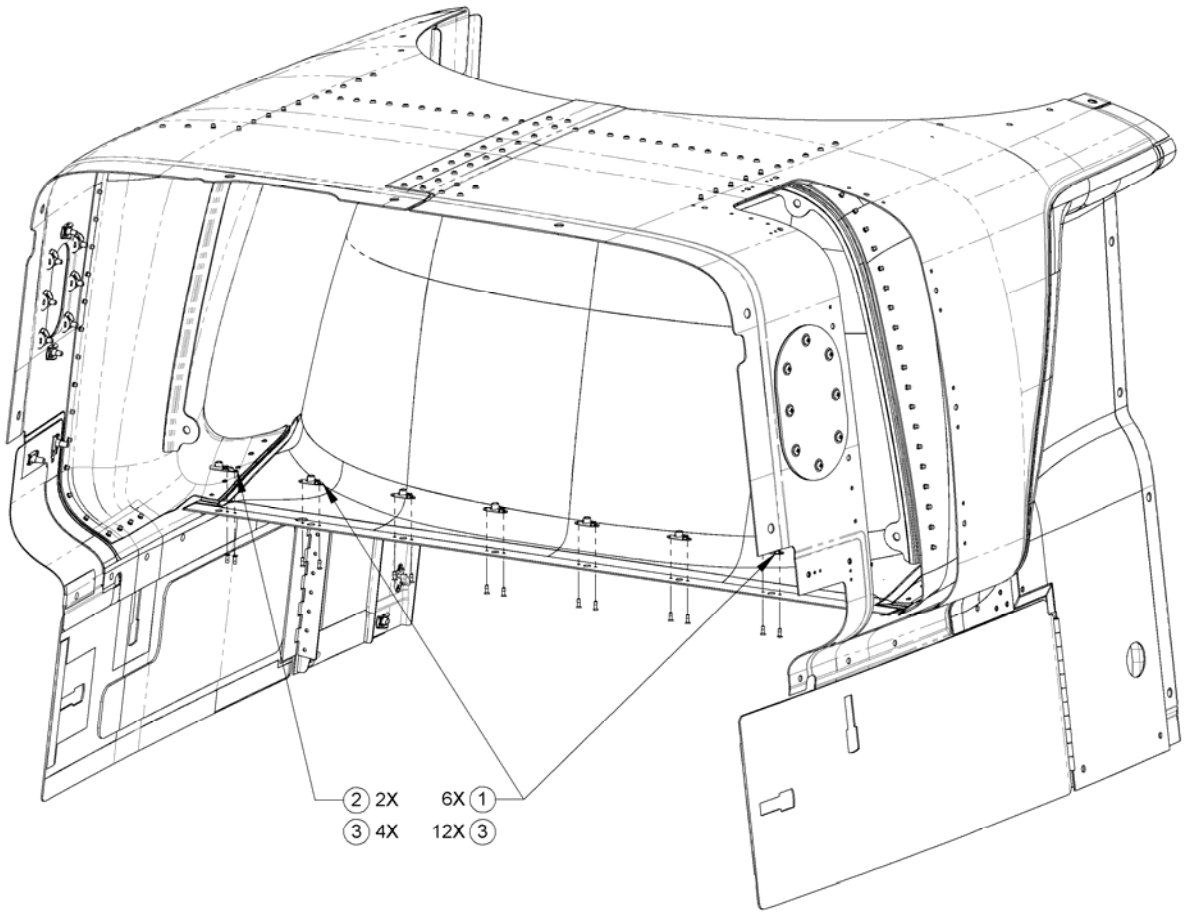

Figure B-3: Cowl Forward Lip Modification

INDEX NUMBER	PART NUMBER	ITEM NAME	UNIT PER ASSY
		FIGURE 3: Cowl Forward Lip Modification	
1	MS21060L3	Platenut	6
2	MS21062L3	Platenut	2
3	NAS1399CFA3-2	Rivet, Blind	16

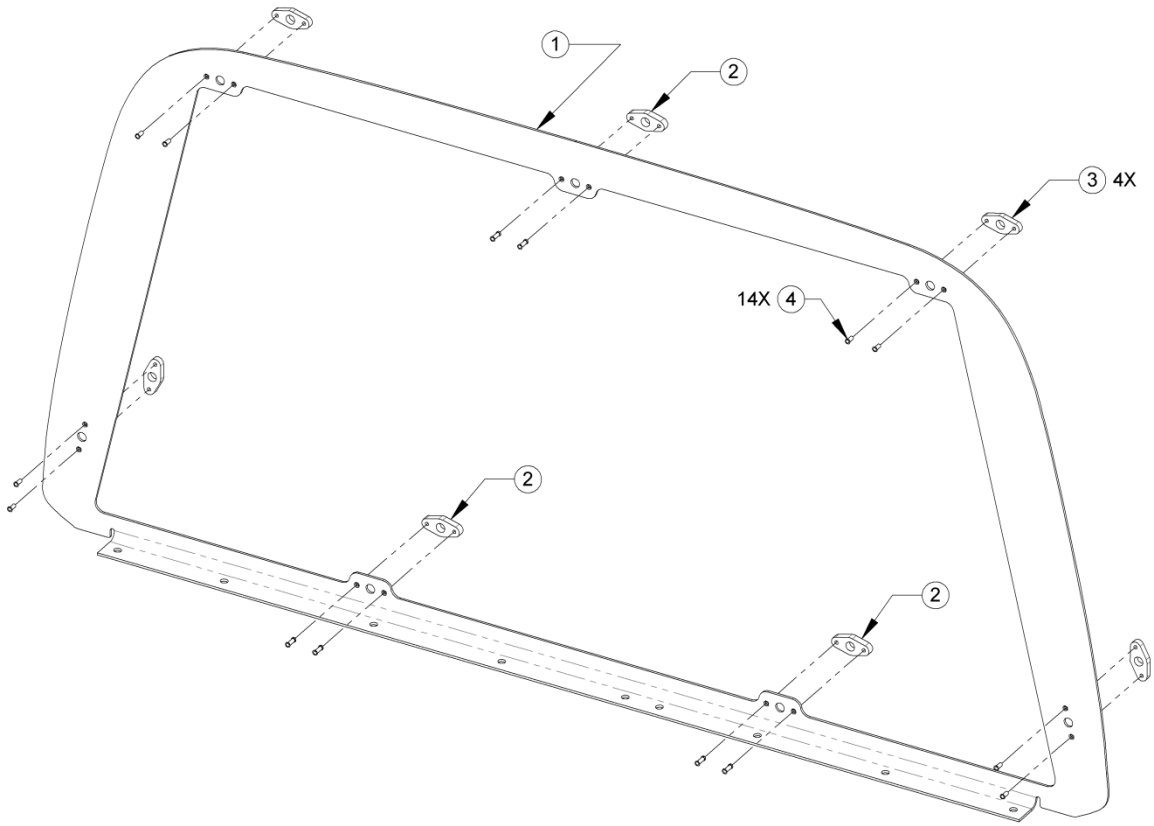

Figure B-4: Filter Adapter Frame Assembly

INDEX NUMBER	PART NUMBER	ITEM NAME	UNIT PER ASSY
		FIGURE 4: Filter Adapter Frame Assembly	
1	106102-203	Frame, Adapter, Filter	1
2	106106-201	Spacer, Adapter – Thick	3
3	106107-201	Spacer, Adapter – Thin	4
4	NAS1097AD3-6	Rivet	14

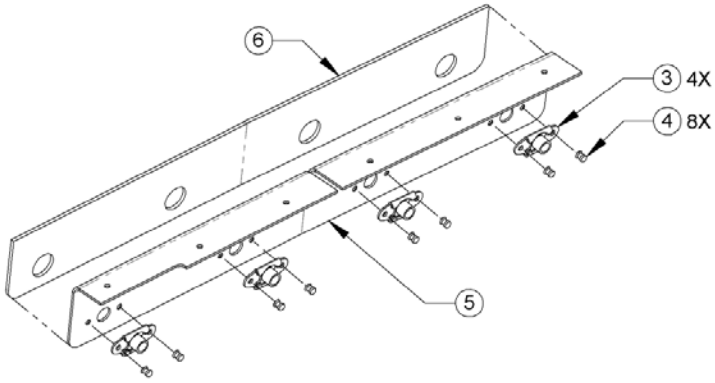

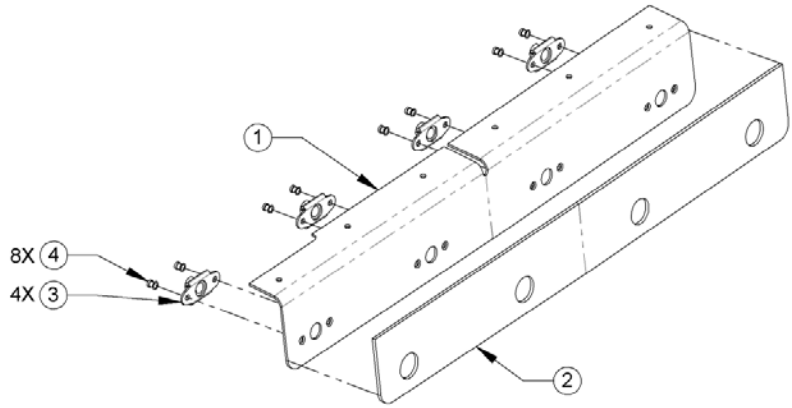

Figure B-5: Floor Closeout Angle Assembly

INDEX NUMBER	PART NUMBER	ITEM NAME	UNIT PER ASSY
		FIGURE B-5: Angle Assembly, Closeout, Floor	
1	106153-203	Angle, Closeout, Floor (LH)	1
2	106108-203	Seal, Angle (LH)	1
3	MS21060L3	Platenut	8
4	NAS1097AD3-3	Rivet	16
5	106153-204	Angle, Closeout, Floor (RH)	1
6	106108-204	Seal, Angle, Side (RH)	1

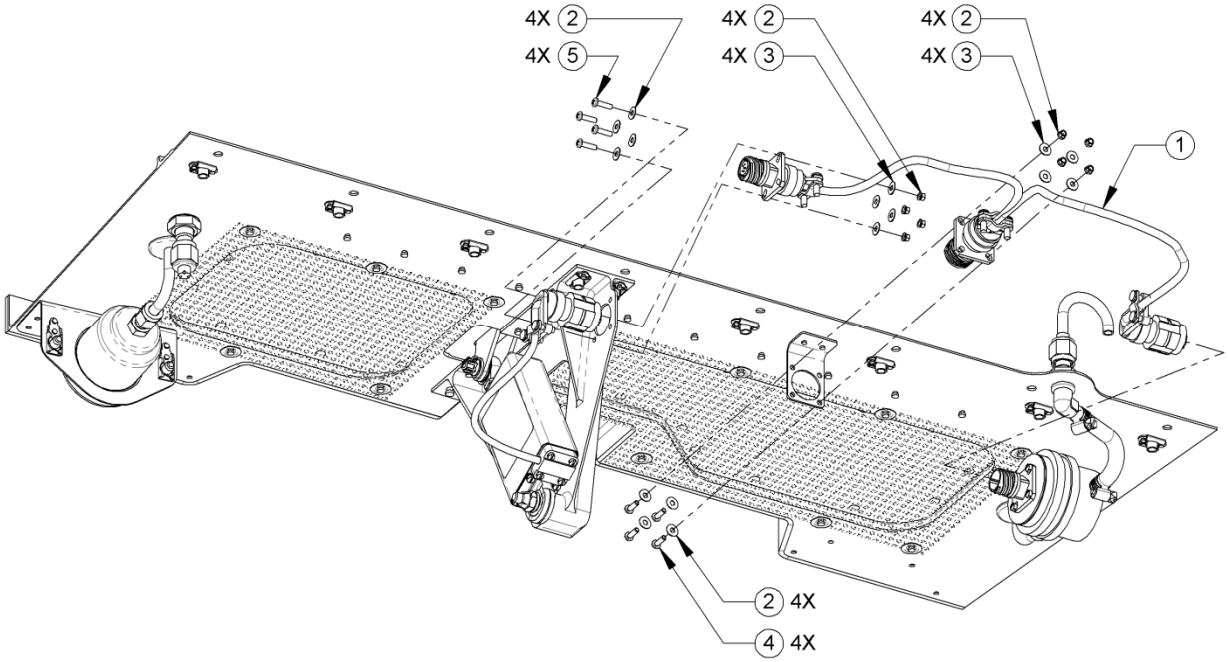

Figure B-6: Wire Harness Assembly Installation

INDEX NUMBER	PART NUMBER	ITEM NAME	UNIT PER ASSY
		FIGURE B-6: Floor and Wire Harness Assembly	
1	106401-105	Wire Harness Assembly	1
2	NAS1149DN416J	Washer	16
3	MS21042L04	Nut	8
4	MS35206-215	Screw	4
5	MS35206-216	Screw	4

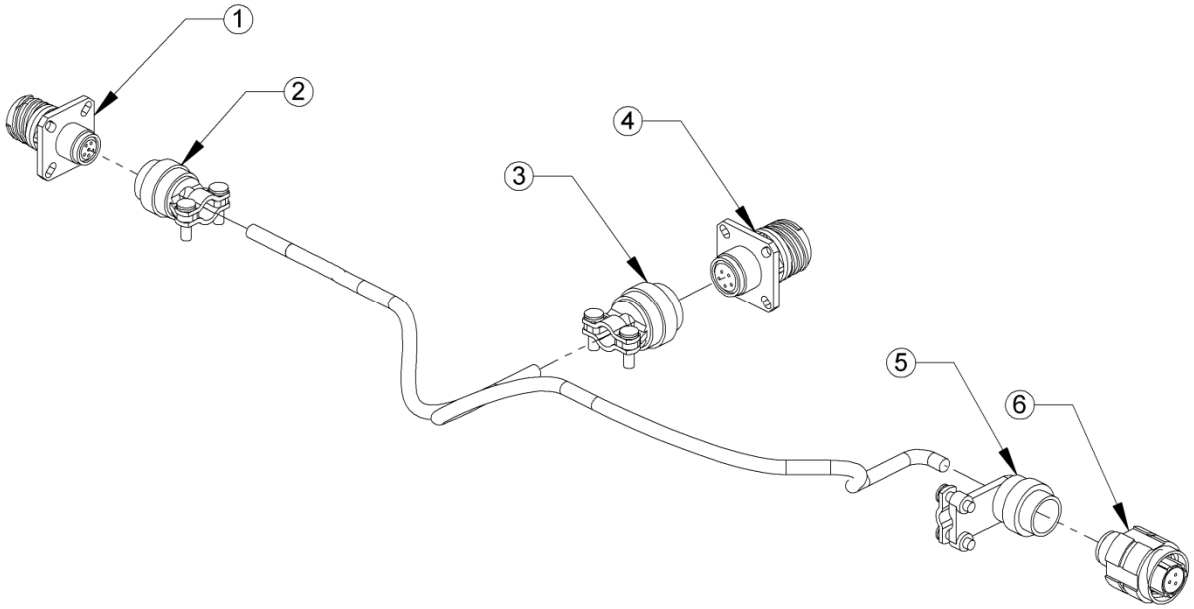

Figure B-7: Wire Harness Assembly

INDEX NUMBER	PART NUMBER	ITEM NAME	UNIT PER ASSY
		FIGURE B-7: Wire Harness Assembly	
1	D38999/20MA35SN	Receptacle	1
2	M85049/38S9W	Backshell	1
3	M85049/38S11W	Backshell	1
4	D38999/20WB5PN	Receptacle	1
5	M85049/39S9W	Backshell	1
6	D38999/26WA98SA	Plug	1

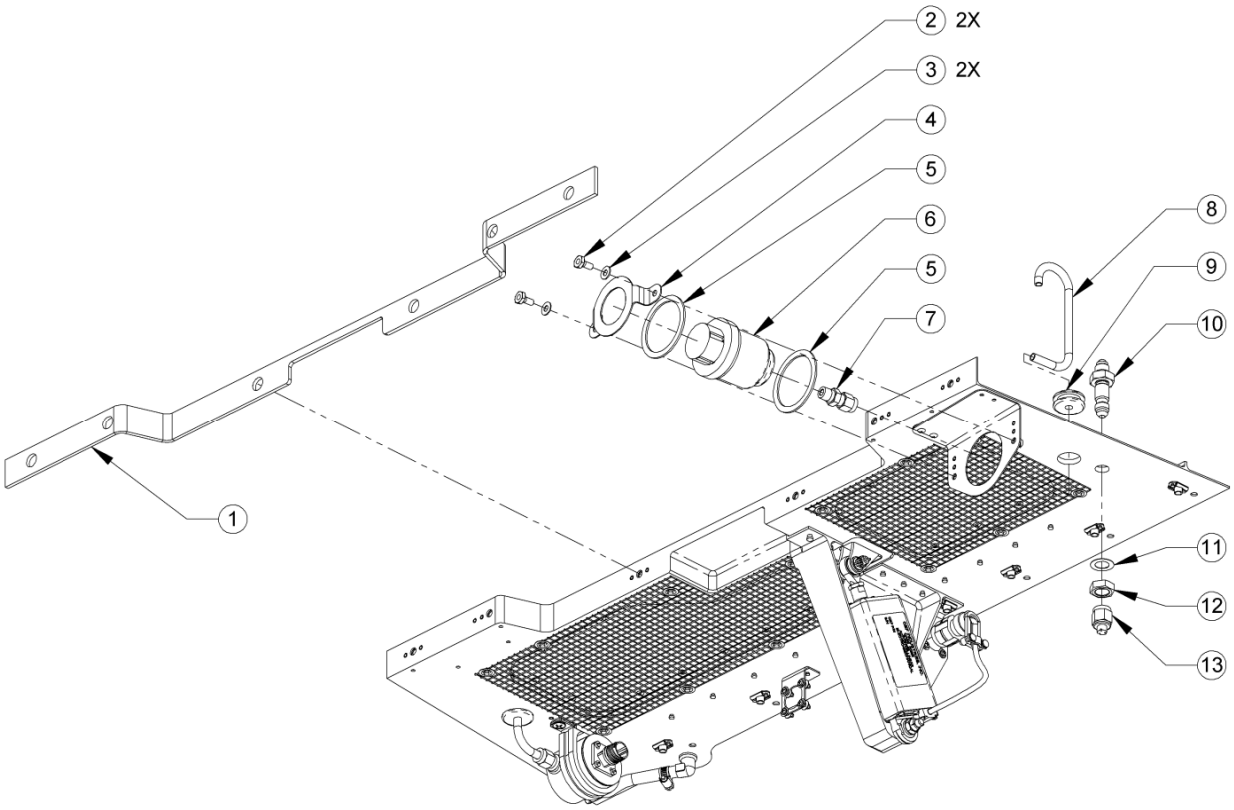

Figure B-8: Firewall Seal and Maintenance Indicator Installation

INDEX NUMBER	PART NUMBER	ITEM NAME	UNIT PER ASSY
		FIGURE B-8: Firewall Seal and Maintenance Indicator Installation	
1	106125-207	Seal, Firewall	1
2	NAS6203-2	Bolt	2
3	NAS1149D0332J	Washer	2
4	100442-201	Retainer, Indicator, Maintenance	1
5	100444-201	Cushion, Indicator, Maintenance	2
6	104441-205	Indicator, Maintenance	1
7	A-400-1-2	Adapter	1
8	106167-201	Tube, Plenum	1
9	MS35489-65	Grommet	1
10	AN832-4D	Union	1
11	NAS1149D0716J	Washer	1
12	AN924-4D	Nut, Jam	1
13	AN929-4	Cap	1

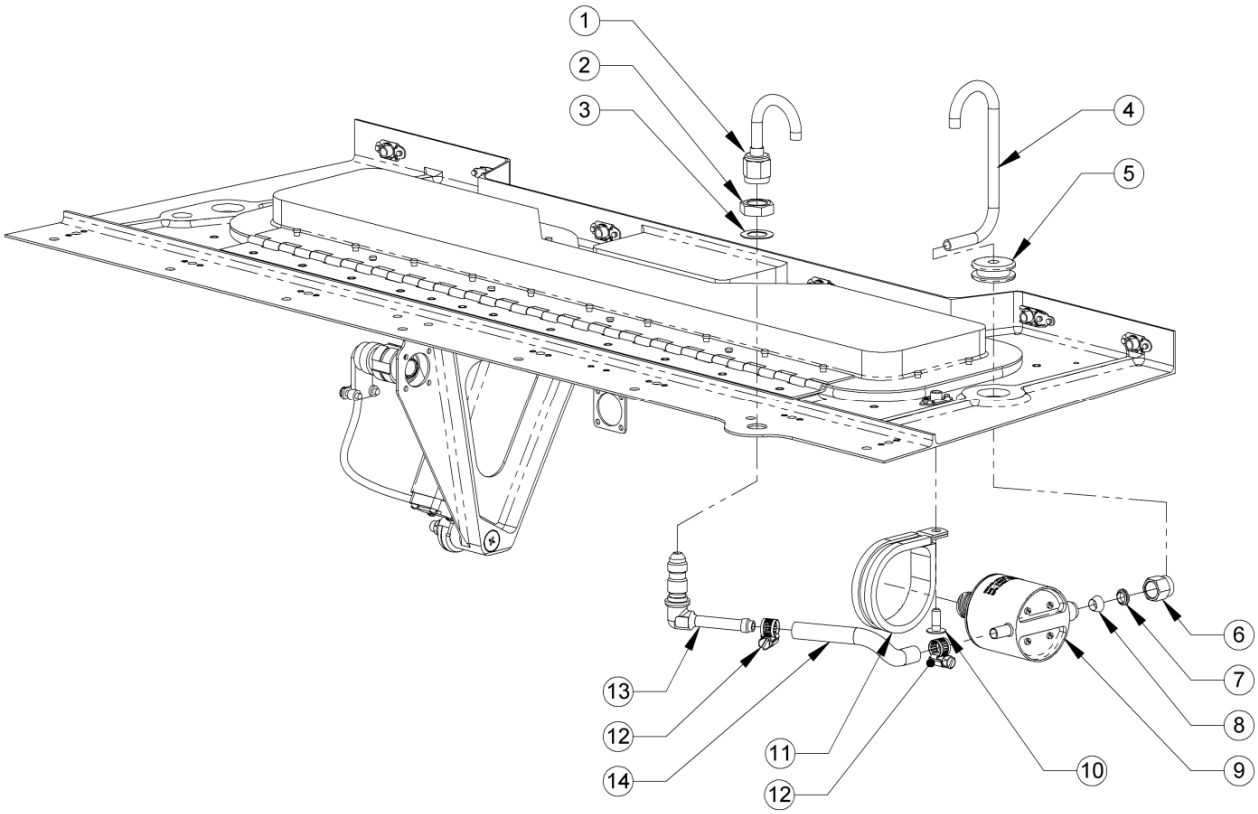

Figure B-9: Differential Pressure Switch Installation

INDEX NUMBER	PART NUMBER	ITEM NAME	UNIT PER ASSY
		FIGURE B-9: Differential Pressure Switch Assembly Installation	
1	106115-101	Tube Assembly, Ambient (See Figure 11 for breakdown)	1
2	AN924-4D	Nut, Jam	1
3	NAS1149D0716J	Washer	1
4	106167-201	Tube, Plenum	1
5	MS35489-65	Grommet	1
6	A-402-1	Nut	1
7	A-404-1	Back Ferrule	1
8	A-403-1	Front Ferrule	1
9	100409-101	Delta-P Switch	1
10	AN525-10R8	Bolt	1
11	MS21919WDG28	Clamp	1
12	3604	Clamp, Hose	2
13	106116-201	Hose, Ambient	1
14	AN838-4D	Elbow	1

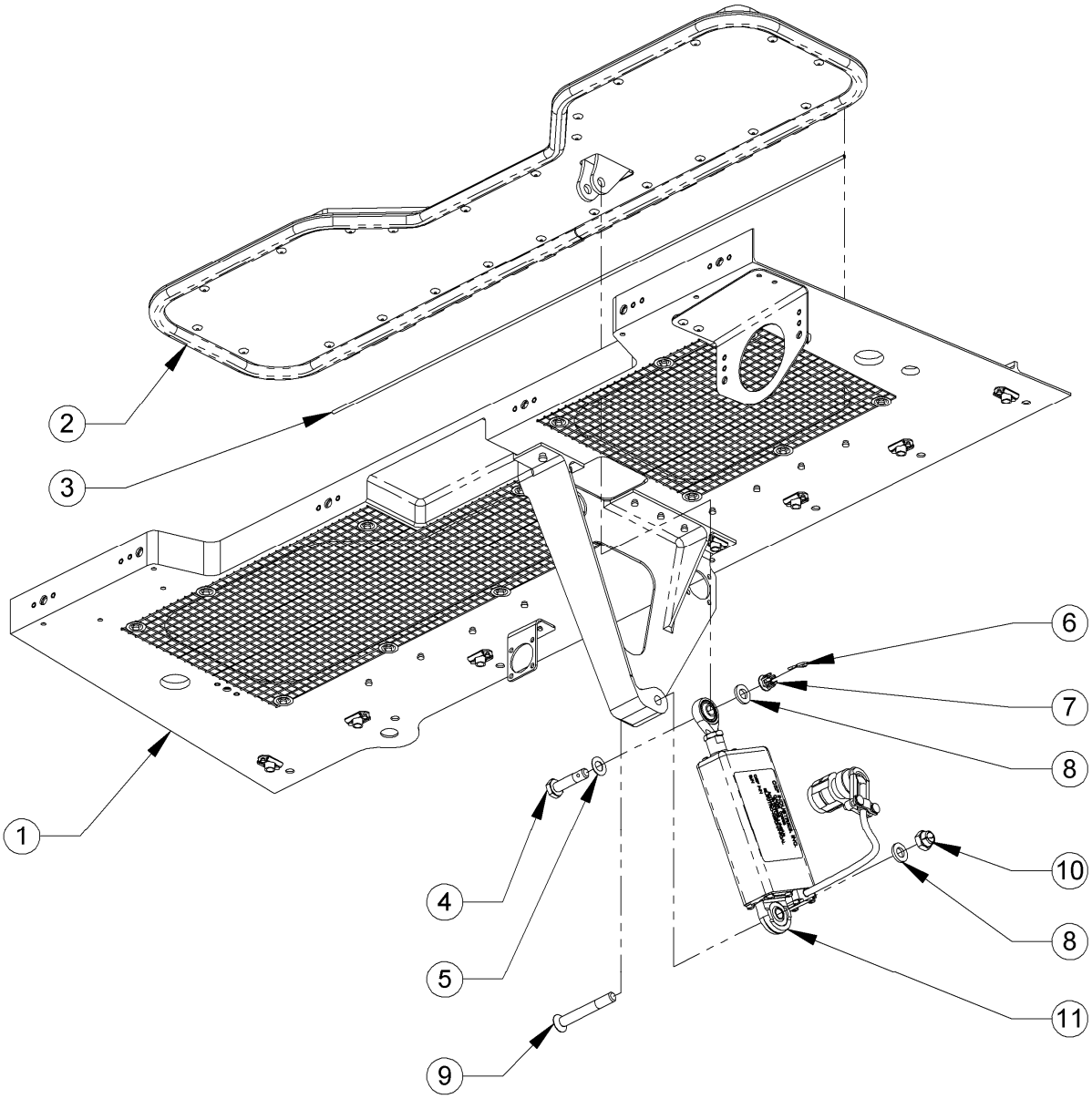

Figure B-10: Bypass Door Assembly and Actuator Installation

INDEX NUMBER	PART NUMBER	ITEM NAME	UNIT PER ASSY
		FIGURE B-10: Bypass Door and Actuator Installation	
1	106111-101	Floor Assembly (See Figure 14 for breakdown)	1
2	106120-101	Door Assembly, Bypass (See Figure 12 for breakdown)	1
3	MS20253-2-1825	Pin	1
4	NAS6204-10D	Bolt	1
5	NAS1149D0416J	Washer	1
6	MS24665-132	Pin, Cotter	1
7	MS14144L4	Nut	1
8	NAS1149D0463J	Washer	2
9	MS246945117	Screw	1
10	MS21045L4	Nut	1
11	106113-203	Actuator	1

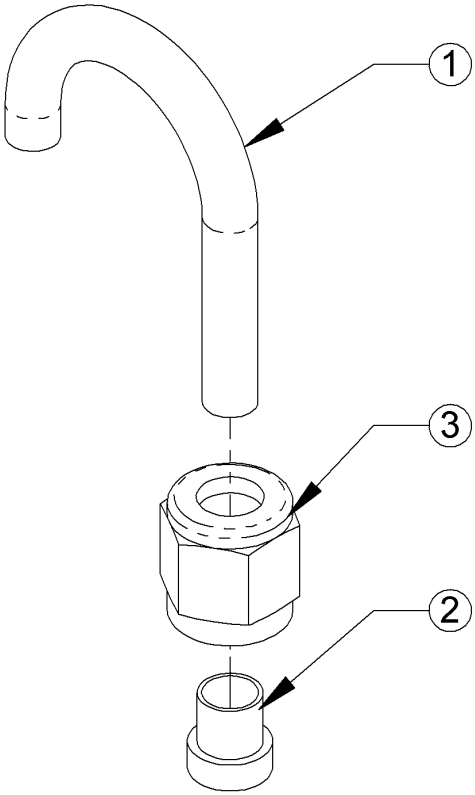

Figure B-11: Ambient Tube Assembly

INDEX NUMBER	PART NUMBER	ITEM NAME	UNIT PER ASSY
		FIGURE B-11: Ambient Tube Assembly	
1	106165-201	Tube, Ambient	1
2	MS20819-4D	Sleeve	1
3	AN818-4D	Nut	1

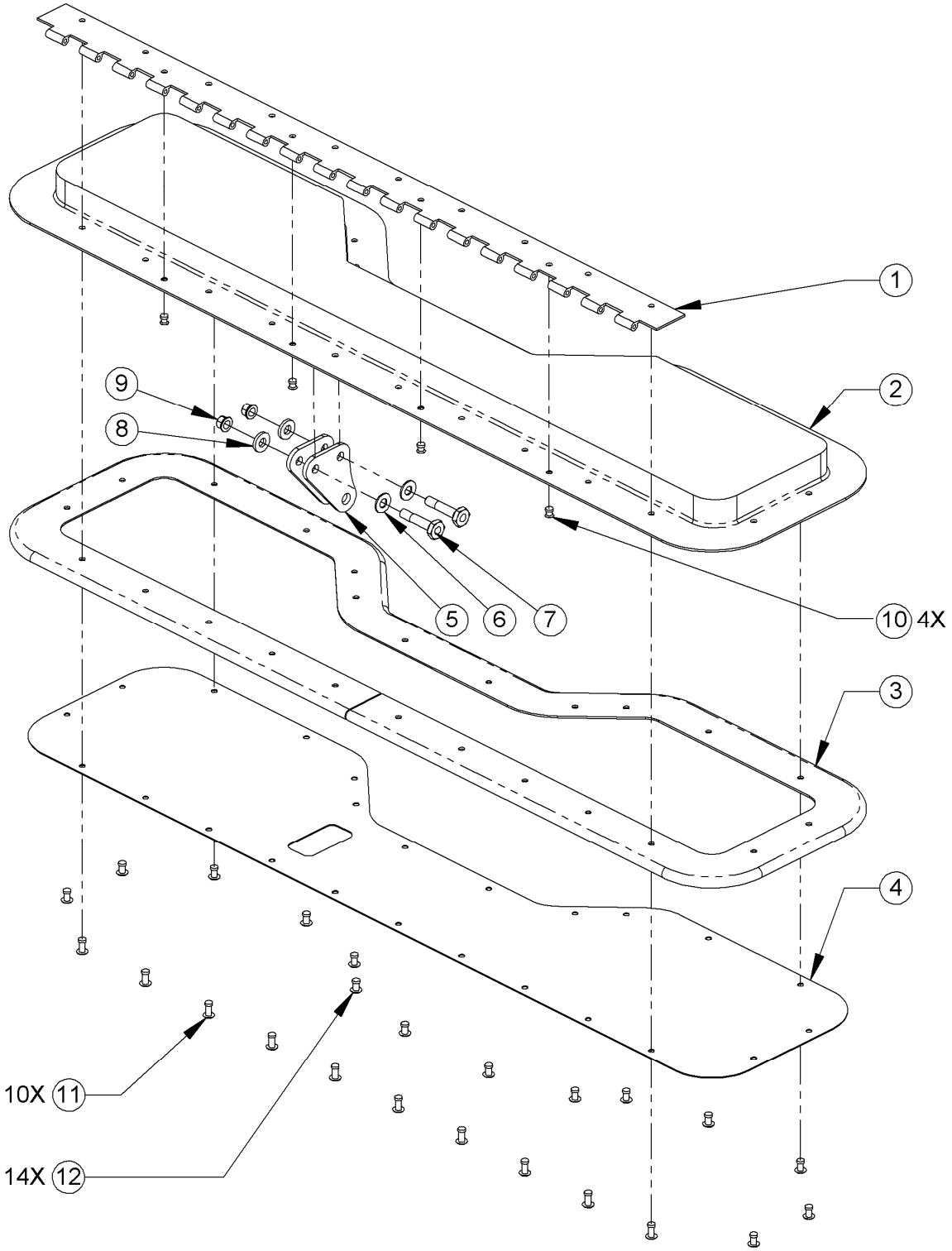

Figure B-12: Bypass Door Assembly

INDEX NUMBER	PART NUMBER	ITEM NAME	UNIT PER ASSY
		FIGURE B-12: Bypass Door Assembly	
1	106124-203	Hinge Half, Door	1
2	106121-203	Door, Bypass	1
3	106122-201	Seal, Bypass Door	1
4	106123-201	Retainer, Seal, Bypass	1
5	106127-201	Plate, Clevis	2
6	NAS1149D0332J	Washer	2
7	NAS6203-10	Bolt	2
8	NAS1149D0363J	Washer	2
9	MS21042L3	Nut	2
10	NAS1097AD4-4	Rivet	4
11	MS20470AD4-6	Rivet	10
12	MS20470AD4-5	Rivet	14

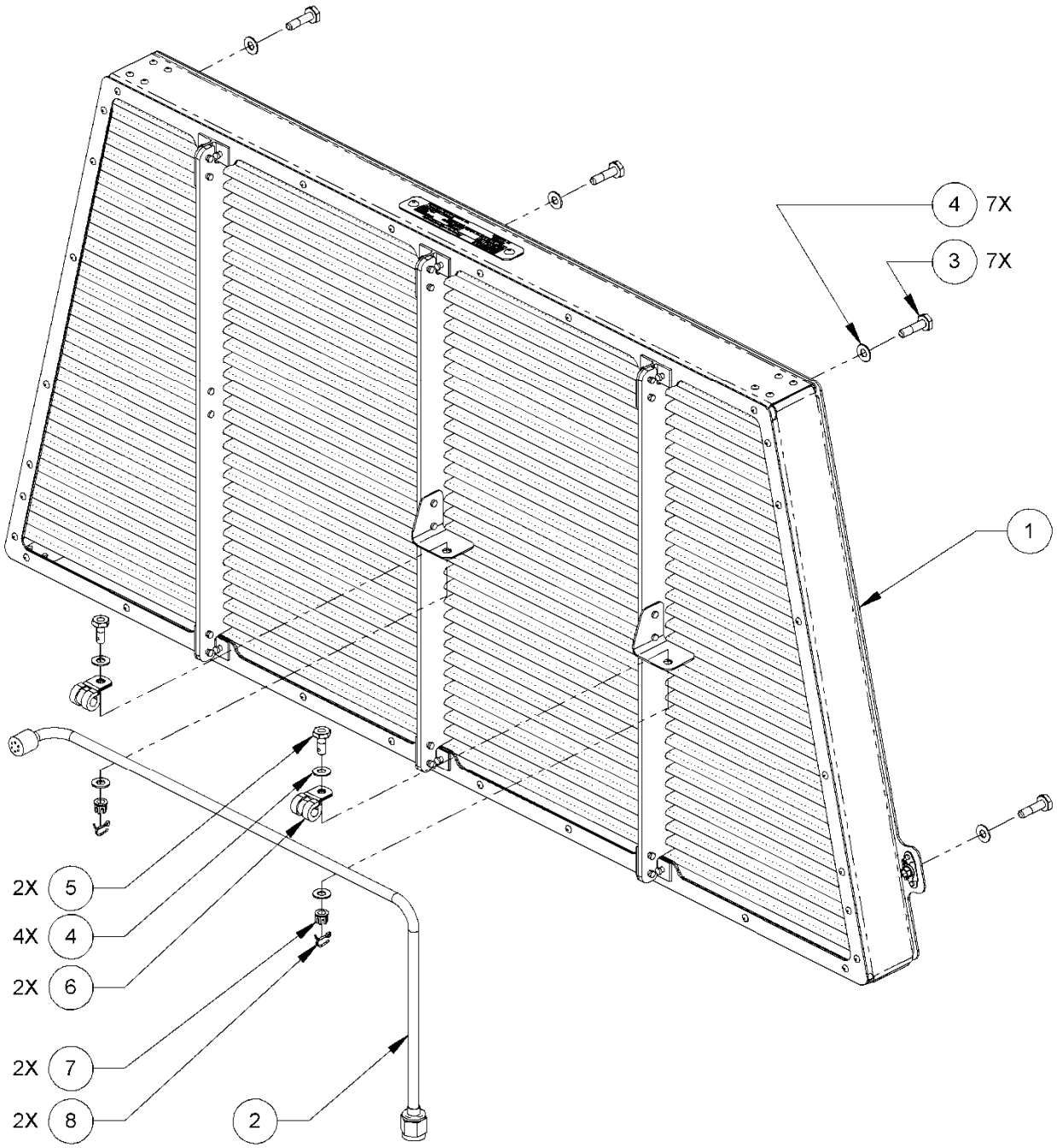

Figure B-13: Filter/Engine Wash Tube Assembly

INDEX NUMBER	PART NUMBER	ITEM NAME	UNIT PER ASSY
		FIGURE B-13: Filter/Engine Wash Tube Assembly	
1	106201-103	Filter Assembly	1
2	106202-101	Tube Assembly, Engine Wash	1
3	NAS6203-7	Bolt	7
4	NAS1149D0332J	Washer	11
5	NAS6203-3D	Bolt	2
6	MS21919WDG4	Clamp	2
7	MS14144L3	Nut,Castle	2
8	MS24665-86	Pin, Cotter	2

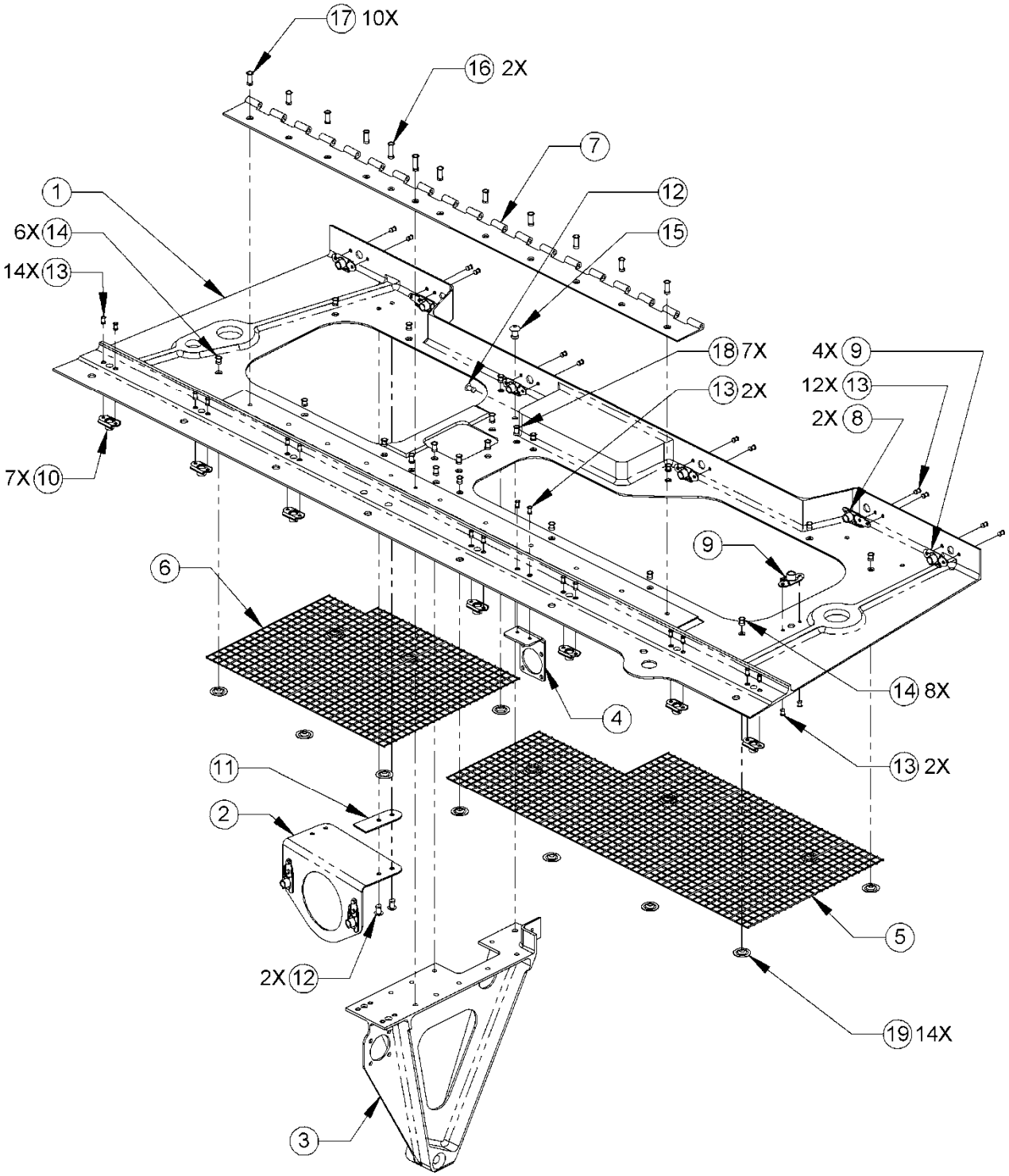

Figure B-14: Floor Assembly

INDEX NUMBER	PART NUMBER	ITEM NAME	UNIT PER ASSY
		FIGURE B-14: Floor Assembly	
1	106161-201	Floor	1
2	106130-101	Mount Assembly, Indicator, Maintenance (See Figure 15 for breakdown)	1
3	106112-101	Mount Assembly, Actuator (See Figure 16 for breakdown)	1
4	106133-201	Bracket, Electrical	1
5	106142-201	Screen, Bypass - Large	1
6	106141-201	Screen, Bypass - Small	1
7	106118-201	Hinge, Floor	1
8	MS21061L3	Platenut	2
9	MS21059L3	Platenut	5
10	MS21075L3N	Platenut	7
11	106126-201	Spacer, Indicator, Maintenance	1
12	MS20470AD4-5	Rivet	3
13	NAS1097A3-3-5	Rivet	30
14	NAS1097AD4-4	Rivet	14
15	MS20470AD5-6	Rivet	1
16	NAS1097AD4-8-5	Rivet	2
17	NAS1097AD4-7	Rivet	10
18	NAS1097AD4-5	Rivet	7
19	A3236-6	Washer	14

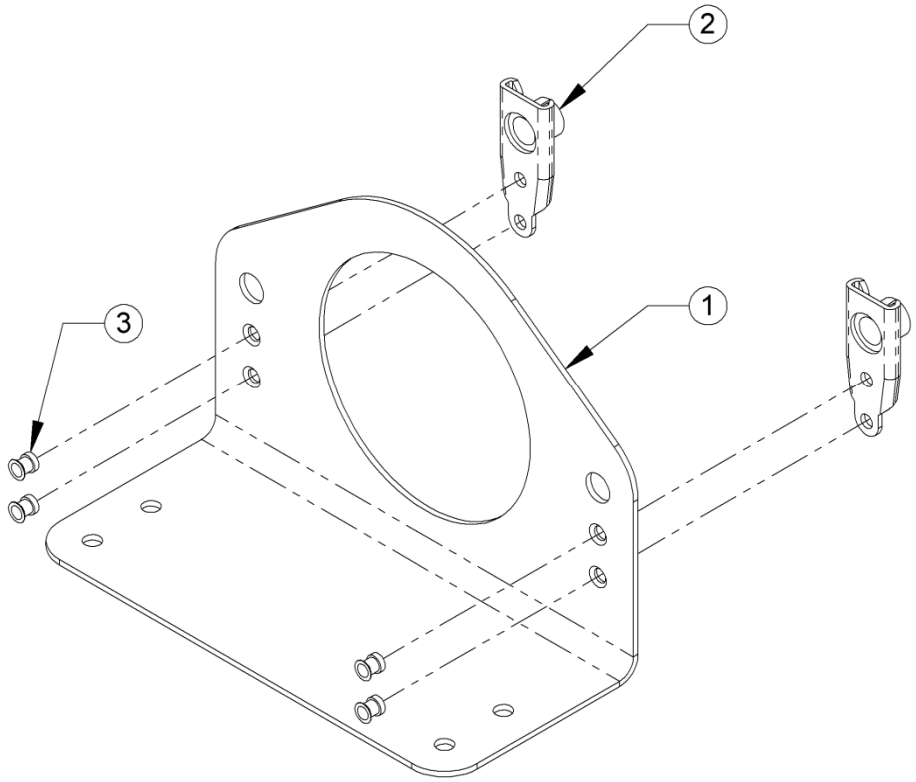

Figure B-15: Maintenance Indicator Mount Assembly

INDEX NUMBER	PART NUMBER	ITEM NAME	UNIT PER ASSY
		FIGURE 15: Maintenance Indicator Mount Assembly	
1	106131-201	Mount, Indicator, Maintenance	1
2	MS21061L3	Platenut	2
3	NAS1097AD3-3	Rivet	4

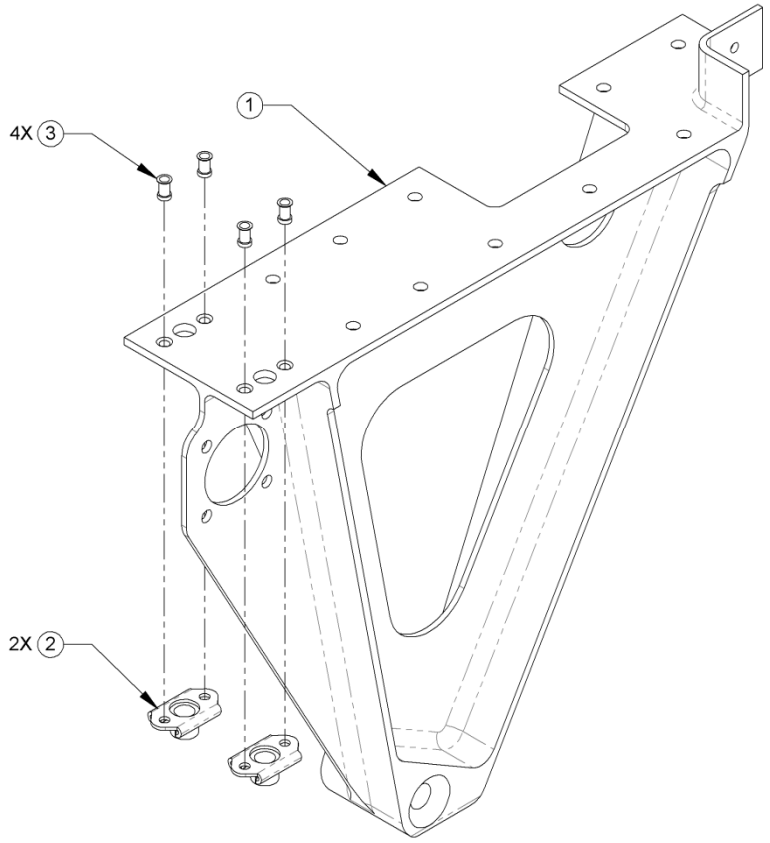

Figure B-16: Actuator Mount Assembly

INDEX NUMBER	PART NUMBER	ITEM NAME	UNIT PER ASSY
		FIGURE 16: Actuator Mount Assembly	
1	106162-201	Mount, Actuator	1
2	MS21075L3N	Platenut	2
3	NAS1097AD3-4	Rivet	4

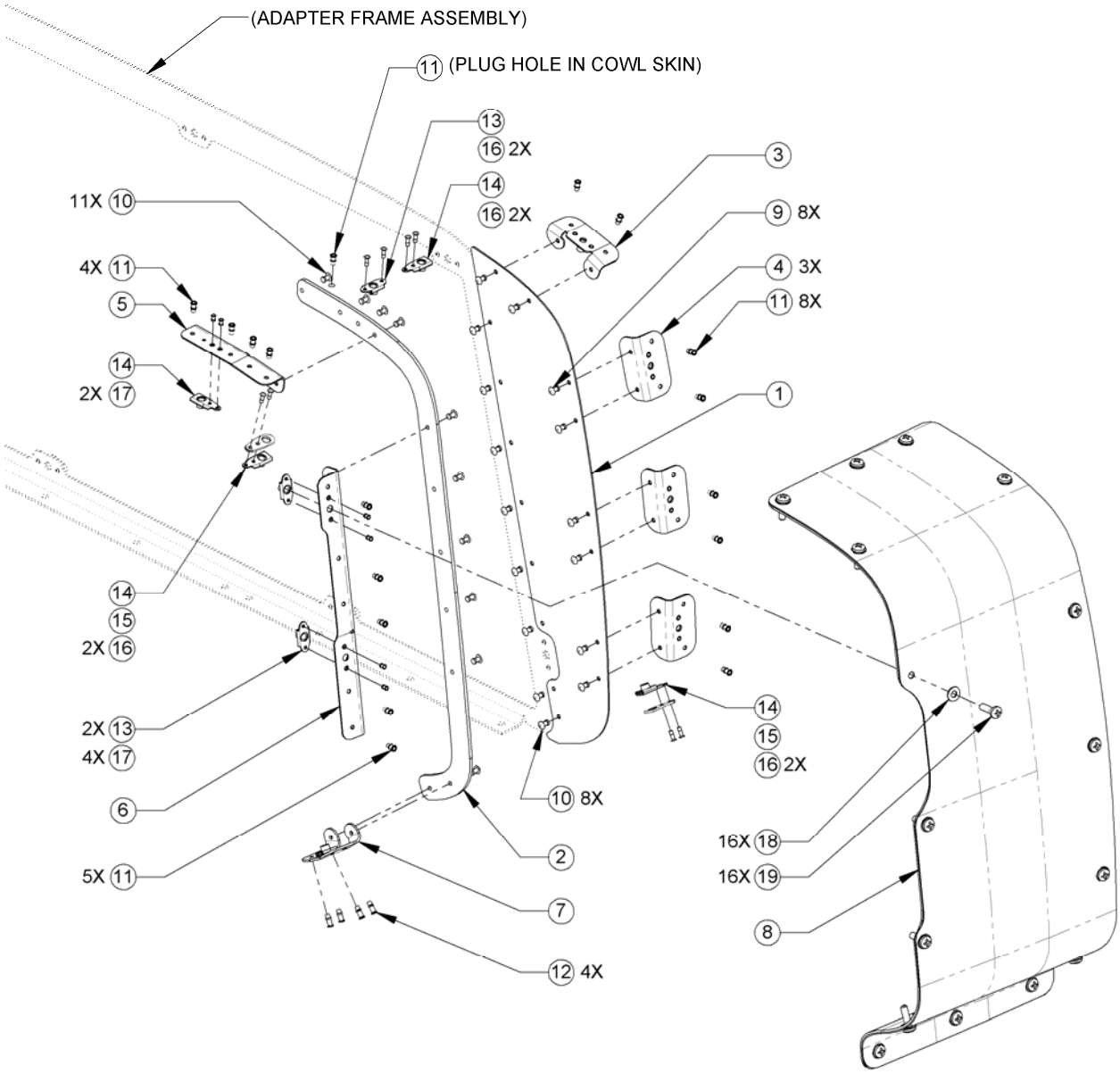

Figure B-17: Access Door Kit Installation
(Cowl not shown for clarity)

INDEX NUMBER	PART NUMBER	ITEM NAME	UNIT PER ASSY
		FIGURE B-17: Cowl Modification/Access Door Installation	
1	106302-203	Plate, Sill, Door, Access - FWD	1
2	106303-203	Plate, Sill, Door, Access – AFT	1
3	106304-103	Angle Assy, Sill, Door, Access – FWD, UPR (See Figure 20 for breakdown)	1
4	106305-103	Angle Assy, Sill, Door, Access – FWD, LWR (See Figure 19 for breakdown)	3
5	106306-205	Angle, Sill, Door, Access – AFT, UPR	1
6	106307-207	Angle, Sill, Door, Access – AFT, MID	1
7	106308-103	Angle Assy, Sill, Door, Access – AFT, LWR (See Figure 18 for breakdown)	1
8	106310-101	Access Door Assembly (See Figure 21 for breakdown)	1
9	MS20470AD4-4	Rivet	8
10	MS20470AD4-5	Rivet	19
11	MS21140S04-02	Rivet, Blind	18
12	MS21140S04-03	Rivet, Blind	4
13	MS21060L3	Platenut	3
14	MS21062L3	Platenut	4
15	NAS463YC10H	Shim	2
16	NAS1399CFA3-3	Rivet, Blind	8
17	NAS1097AD3-3-5	Rivet	6
18	NAS1149C0332R	Washer	16
19	MS27039C1-10	Screw	16

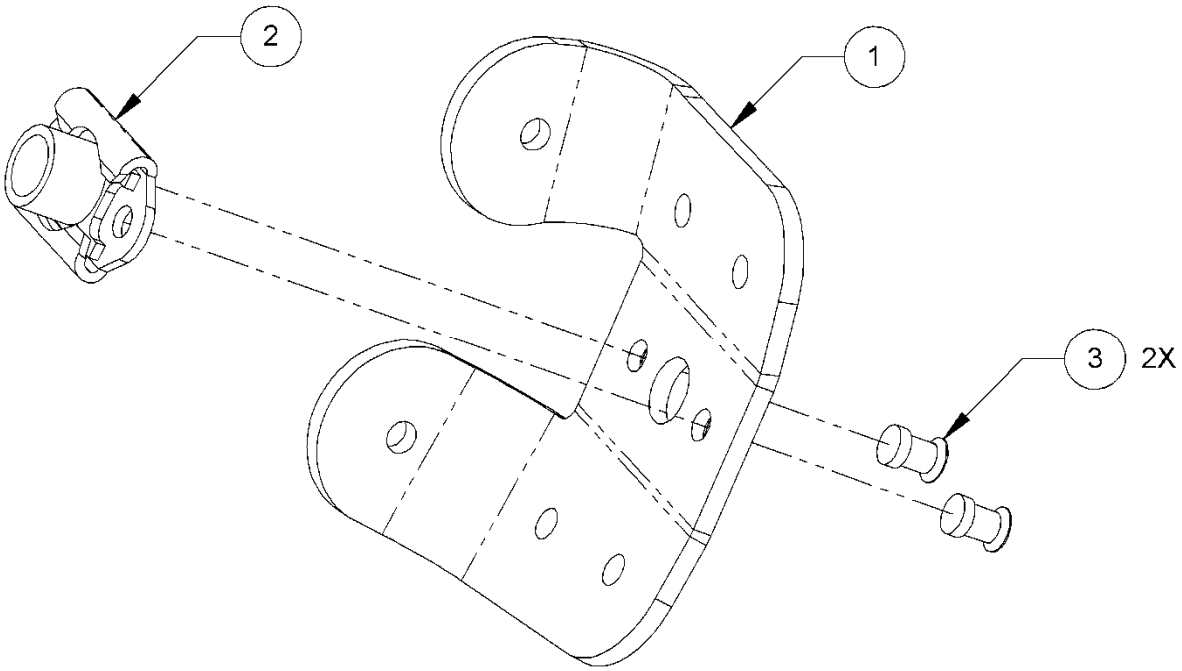

Figure B-18: Angle Assembly, Sill, Door, Access – AFT, LWR

INDEX NUMBER	PART NUMBER	ITEM NAME	UNIT PER ASSY
		FIGURE 18: Angle Assembly, Sill, Door, Access – AFT, LWR	
1	106309-203	Angle, Sill, Door, Access – AFT, LWR	1
2	MS21076L3N	Platenut	1
3	NAS1097AD3-3-5	Rivet	2

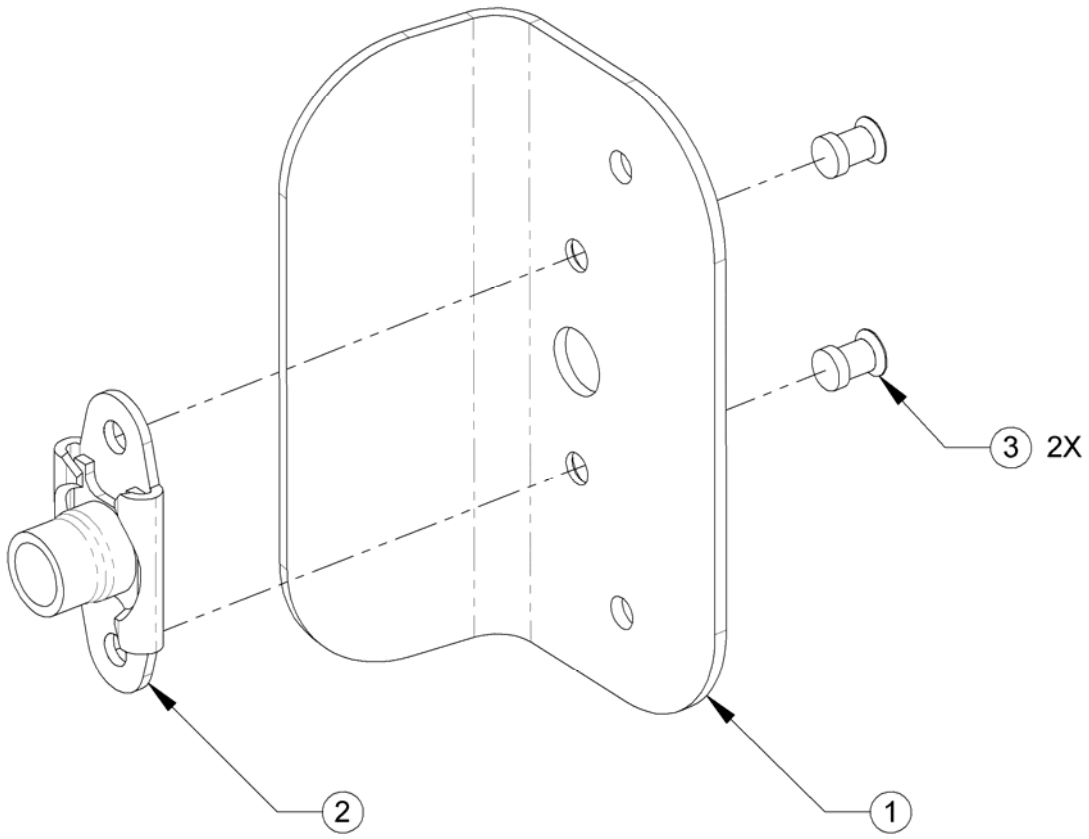

Figure B-19: Angle Assembly, Sill, Door, Access – FWD, LWR

INDEX NUMBER	PART NUMBER	ITEM NAME	UNIT PER ASSY
		FIGURE B-19: Angle Assembly, Sill, Door, Access – FWD, LWR	
1	106316-203	Angle, Sill, Door, Access – FWD, LWR	1
2	NAS1870C3-2	Platenut	1
3	NAS1097AD3-3-5	Rivet	2

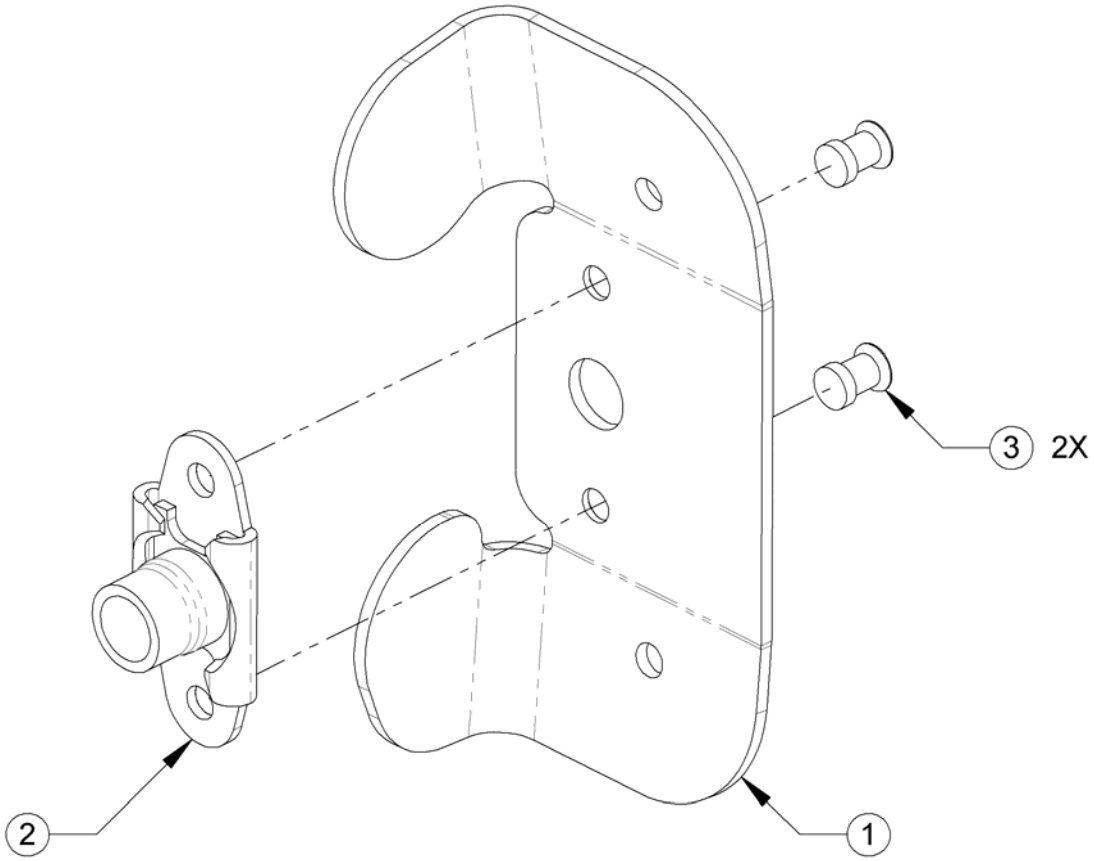

Figure B-20: Angle Assembly, Sill, Door, Access – FWD, UPR

INDEX NUMBER	PART NUMBER	ITEM NAME	UNIT PER ASSY
		FIGURE B-20: Angle Assembly, Sill, Door, Access – FWD, UPR	
1	106314-203	Angle, Sill, Door – FWD, UPR	1
2	NAS1870C3-2	Platenut	1
3	NAS1097AD3-3-5	Rivet	2

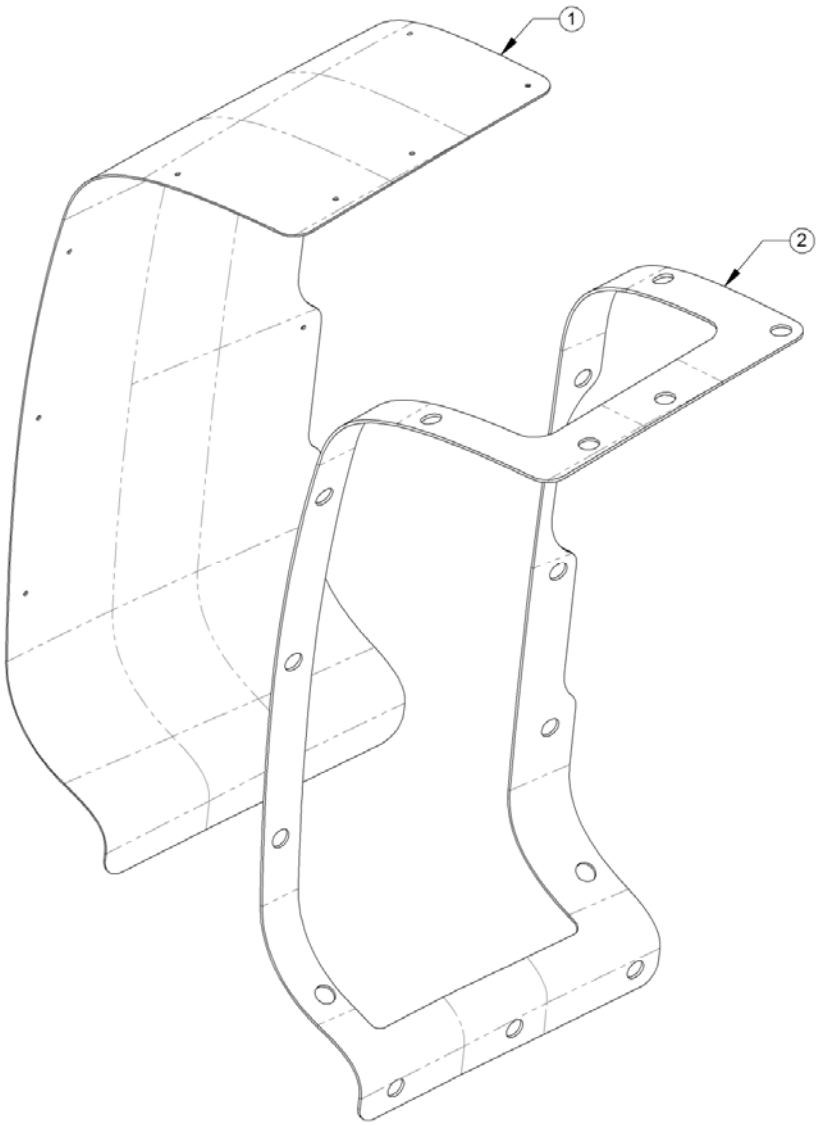

Figure B-21: Access Door Assembly

INDEX NUMBER	PART NUMBER	ITEM NAME	UNIT PER ASSY
		FIGURE 21: Access Door Assembly	
1	106311-201	Door, Access	1
2	106312-205	Seal, Door, Access	1

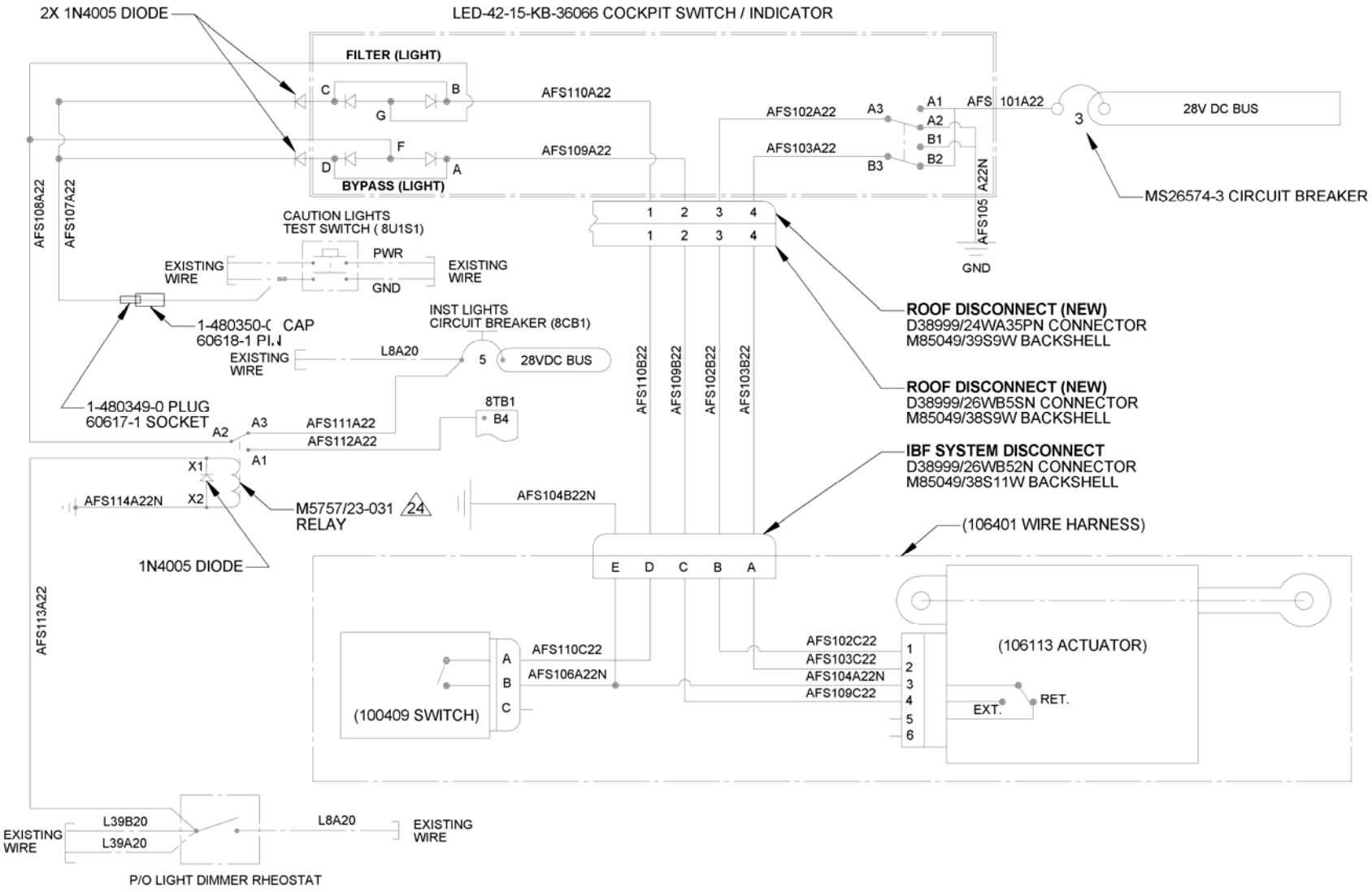

Figure B-22: 106400-103 Electrical System Installation Schematic

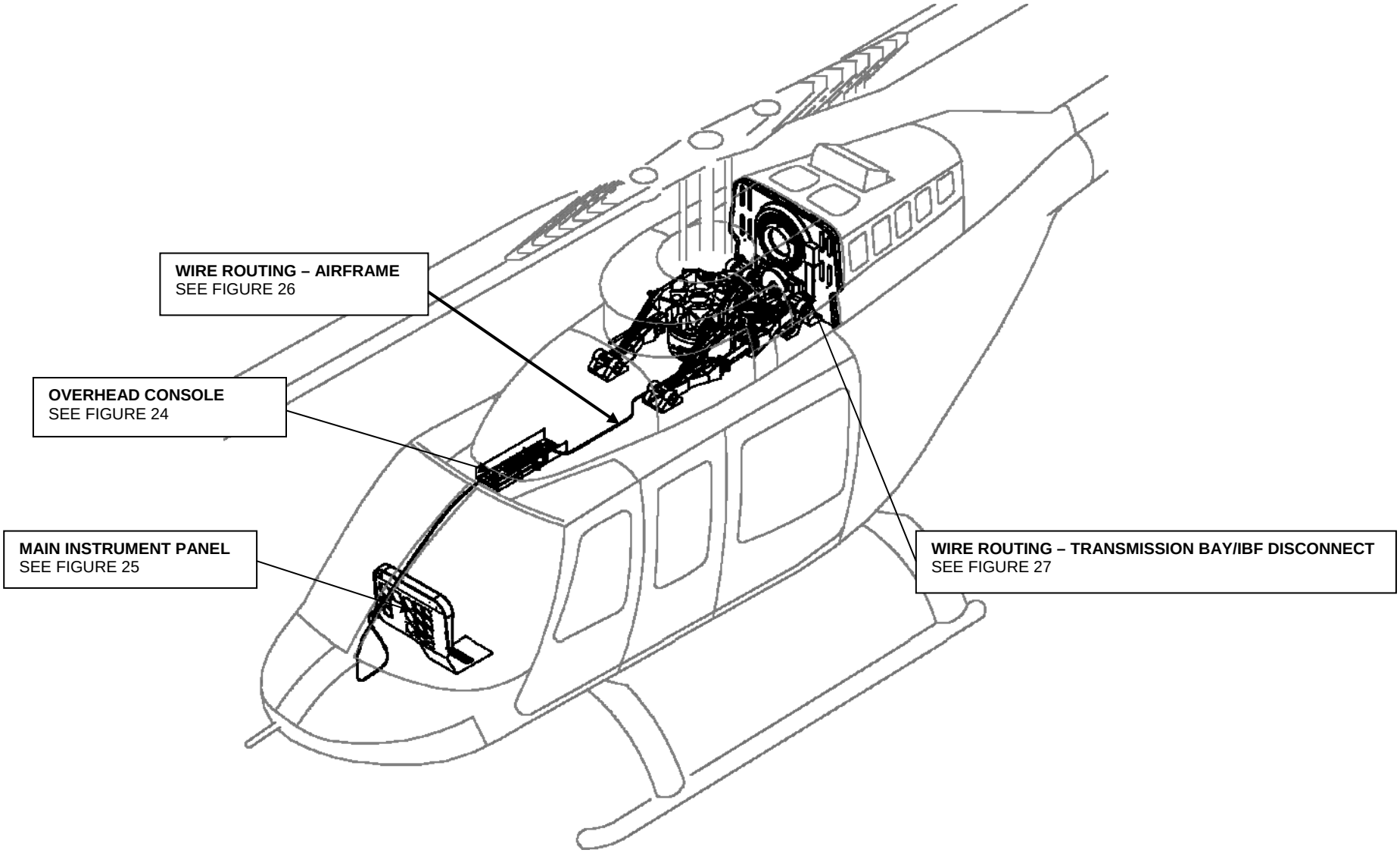

Figure B-23: 106400-103 Electrical System Installation Schematic

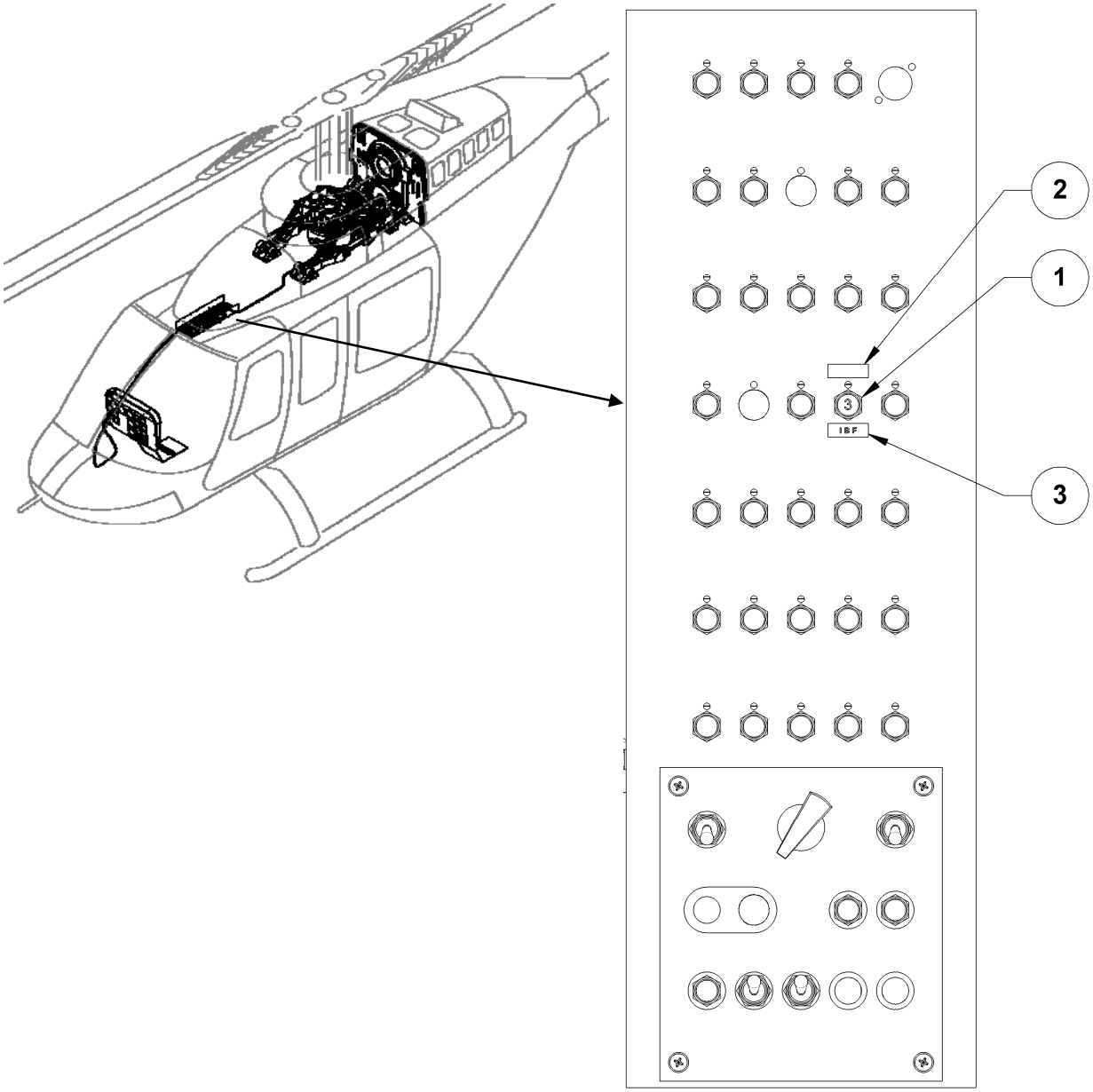

Figure B-24: Overhead Console

INDEX NUMBER	PART NUMBER	ITEM NAME	UNIT PER ASSY
		FIGURE: A-24. Overhead Console	
1	MS26574-3	Circuit Breaker	1
2	100375-237	Placard (blank)	1
3	100375-233	Placard – “IBF”	2

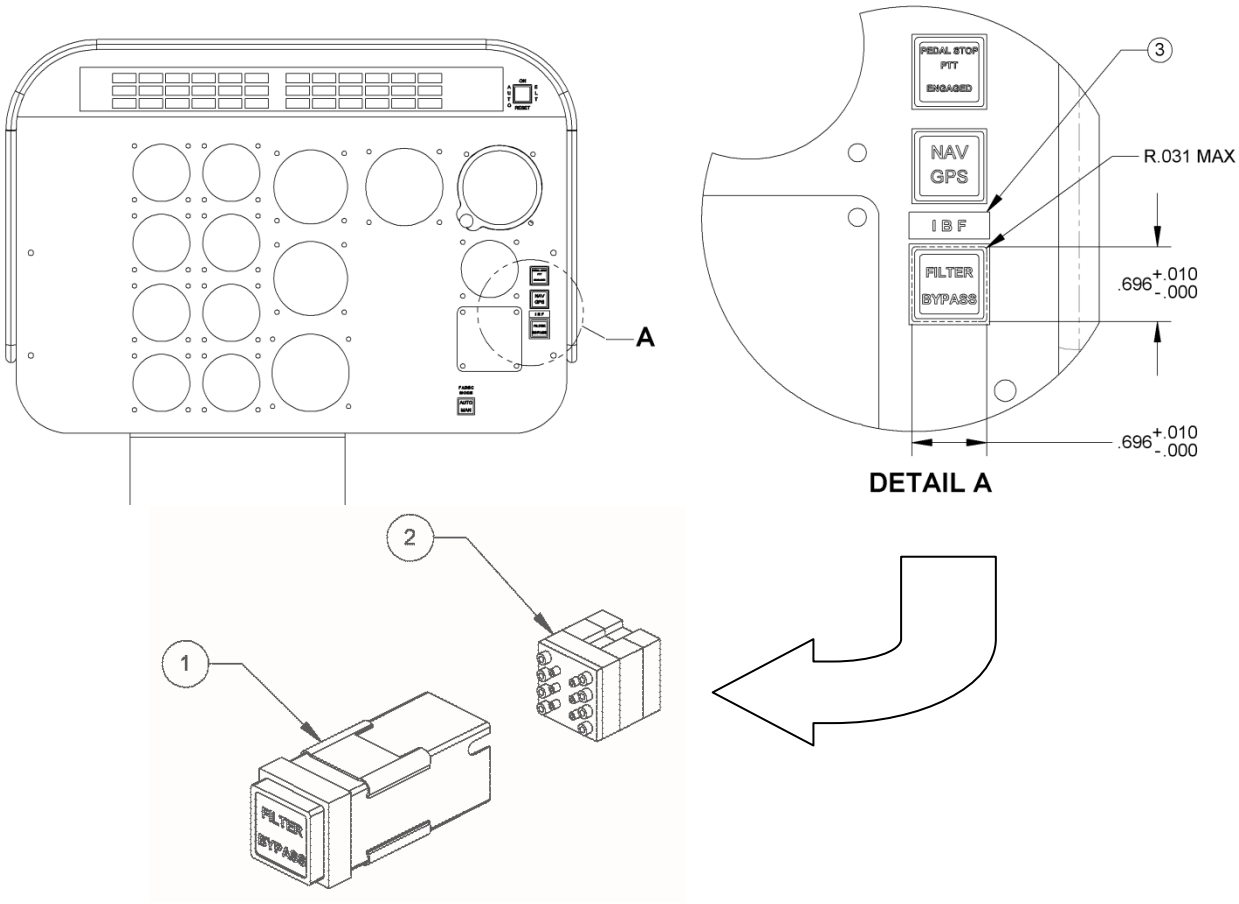

Figure B-25: Cockpit Switch/Indicator Installation

INDEX NUMBER	PART NUMBER	ITEM NAME	UNIT PER ASSY
		FIGURE A-25: Cockpit Switch/Indicator Installation	
1	LED-42-15-KB-36066	Cockpit Switch/Indicator (used on 407)	1
2	18-200	Connector	1
3	100375-233	Placard “IBF”	1
4	M85049/22-192	Socket (Not Shown)	10

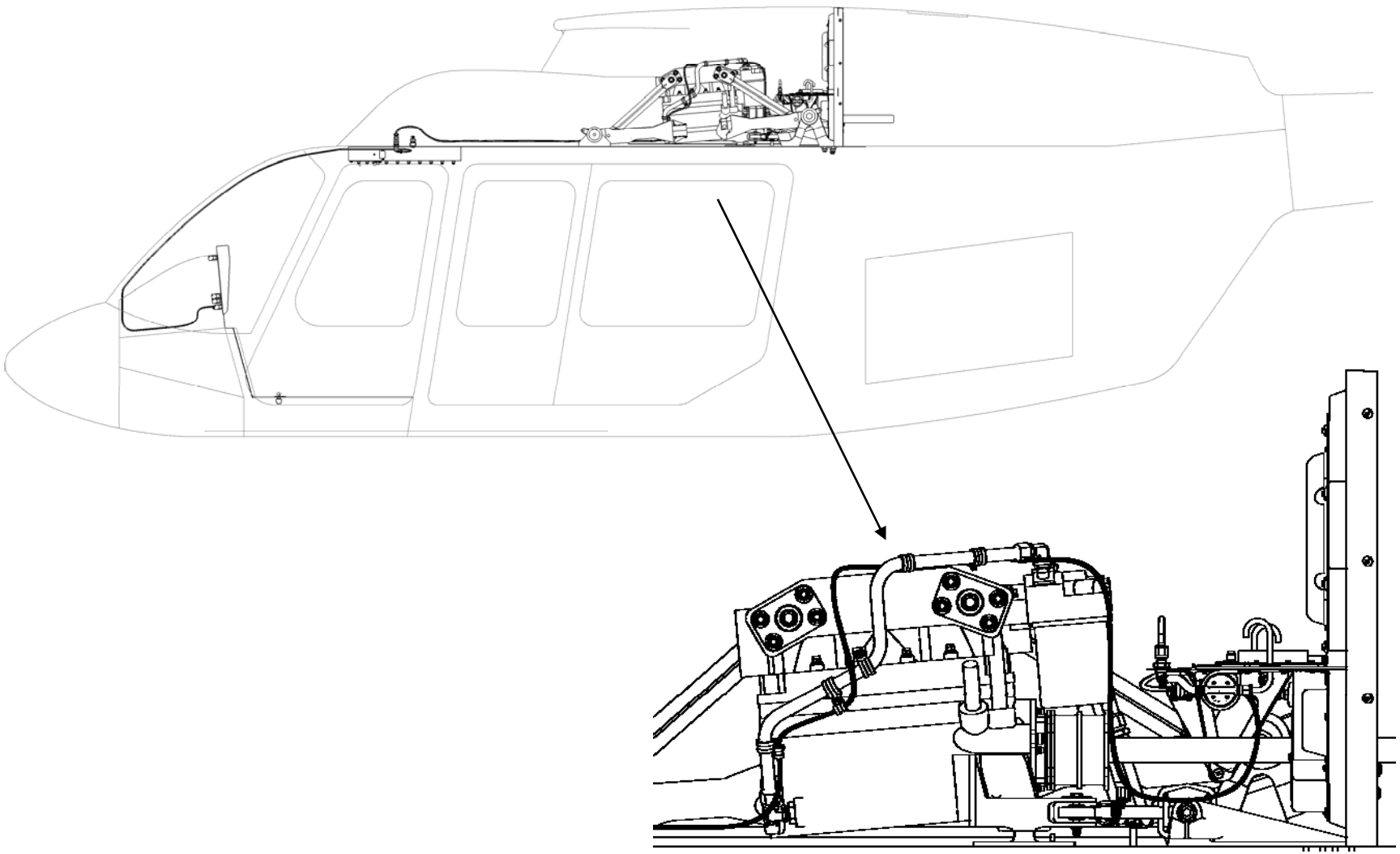

Figure B-26: Wire Routing – LKG INBD, LH Side
(Air Inlet Cowl Assembly Not Shown For Clarity)

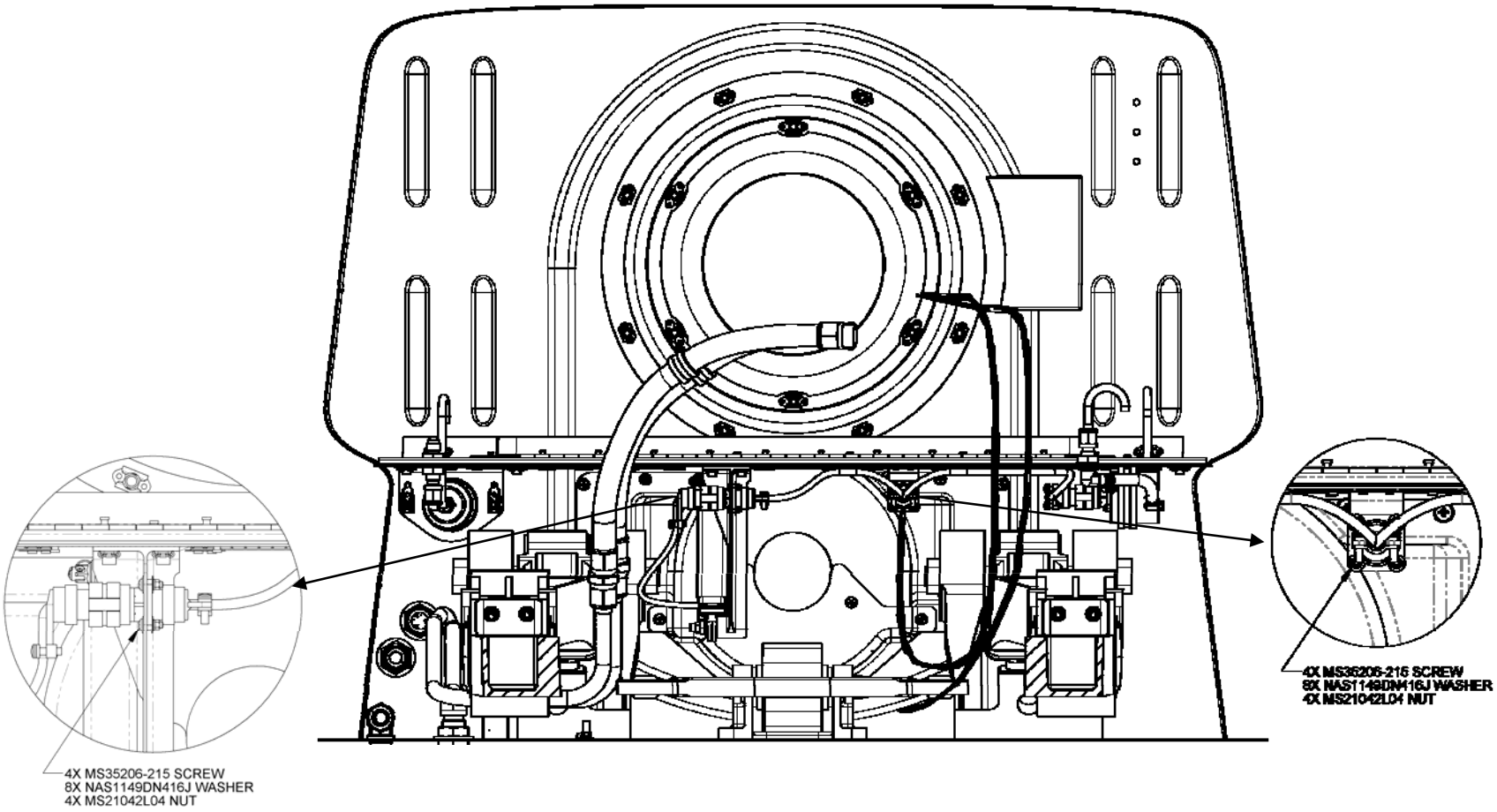

Figure B-27: Wire Routing - : IBF Wiring – LKG AFT
(Transmission not shown for clarity)