Aircraft Flight Manual

Doc. No. 2006/044
4th Edition – Rev. 14
March 03, 2020

TECNAM P2006T

MANUFACTURER: *COSTRUZIONI AERONAUTICHE* ***TECNAM*** *S.p.A.*
AIRCRAFT MODEL: ***P2006T***
EASA TYPE CERTIFICATE NO: **A .185** (DATED 2009, JUNE 5TH)

SERIAL NUMBER: …….....

BUILD YEAR: …….....

REGISTRATION MARKINGS: ……...

This Aircraft Flight Manual is approved by ***European Aviation Safety Agency (EASA).***

This Manual contains information required by the FAA to be furnished to the pilot for operation in the U.S.A. plus information supplied by the manufacturer. It is approved by EASA on behalf of the FAA per FAR 21.29.

This Manual must be carried in the airplane at all times.
The airplane has to be operated in compliance with procedures and limitations contained herein.

Costruzioni Aeronautiche **TECNAM** S.p.A.
Via Maiorise
CAPUA (CE) – Italy
Tel. +39 (0) 823.62.01.34
WEB: **www.tecnam.com**

SECTION 0

INDEX

1. RECORD OF REVISIONS 3

2. LIST OF EFFECTIVE PAGES 7

3. FOREWORD 10

4. SECTIONS LIST 11

1. RECORD OF REVISIONS

Any revision to the present Manual, except actual weighing data, is recorded: a Record of Revisions is provided at the front of this manual and the operator is advised to make sure that the record is kept up-to-date.

The Manual issue is identified by Edition and Revision codes reported on each page, lower right side.

The revision code is numerical and consists of the number "0"; subsequent revisions are identified by the change of the code from "0" to "1" for the first revision to the basic publication, "2" for the second one, etc.

Should be necessary to completely reissue a publication for contents and format changes, the Edition code will change to the next number (“2” for the second edition, “3” for the third edition etc).

Additions, deletions and revisions to existing text will be identified by a revision bar (black line) in the left-hand margin of the page, adjacent to the change.

When technical changes cause expansion or deletion of text which results in unchanged text appearing on a different page, a revision bar will be placed in the right-hand margin adjacent to the page number of all affected pages providing no other revision bar appears on the page.

These pages will be updated to the current regular revision date.

NOTE: It is the responsibility of the owner to maintain this handbook in a current status when it is being used for operational purposes.

Rev	Revised page	Description of Revision	Tecnam Approval			EASA Approval or Under DOA Privileges
			DO	OoA	HDO	
0	-	First issue	D. Ronca	M. Oliva	M. Oliva	
1	0-4,8	Amended ROR and LOEP	D. Ronca	M. Oliva	M. Oliva	Approved under the authority of DOA, ref. EASA.21J.335 (MOD2006/270.160429)
	6-12	Amended Equipment List				
	9-1,2,5,7	Amended Supplement List				
2	0-4,8	Amended ROR and LOEP	D. Ronca	M. Oliva	M. Oliva	Approved under the authority of DOA, ref. EASA.21J.335 (MOD2006/290.170316)
	4-3,4,18,19	Amended General recommendations and “Prior to Takeoff” procedure				
	5-16	Amended Cruise performances				
	9-1,2,4,5,7	Amended Supplement List Index				
3	0-1,4,7	Amended cover page, ROR and LOEP	A. Sabino	C. Caruso	M. Oliva	Approved under the authority of DOA, ref. EASA.21J.335 (MOD2006/315.170901)
	6-11, 12, 13	Amended Equipment List				
	9-2,3,8	Amended Supplement List, Modified Introduction,				
4	0-1,4,7, 12	Amended cover page, ROR and LOEP. Blank page added.	A. Sabino	C. Caruso	M. Oliva	Approved under the authority of DOA, ref. EASA.21J.335 (MOD2006/318.171205)
	4-3,11,16, 17,19,20,25	Amended “Pre-flight”, “Engine starting”, “Prior to takeoff” and “Parking/Shut down” checklists				
	5-23	Blank page removed				
	6-11, 12, 13	Amended Equipment List				
5	0-1,4,7,12	Amended cover pages, ROR and LOEP. Blank page added.	A. Sabino	C. Caruso	M. Oliva	Approved under the authority of DOA, ref. EASA.21J.335 (MOD2006/325.180112)
	2-11	Amended caution on supplemental oxygen use.				
	2-12	Integration of info formerly contained in Supp. A27, G16, G18.				
	4-19,22	Amended procedures.				
	6-11,12,13	Amended equipment list.				
	9-all	Amended Supplement List.				

Rev	Revised page	Description of Revision	Tecnam Approval			EASA Approval or Under DOA Privileges
6	0-1, 5, 7	Amended. Blank page added.	A. Sabino	D. Ronca	M. Oliva	Approved under the authority of DOA, ref. EASA.21J.335 (MOD2006/345.181120)
	1-6	Typo in stabilator deflections values corrected.				
	2-12	Reference to Oil Temp. Indicator MOD corrected				
	2-20	Warning amended				
	4-22, 24, 25	Normal procedures amended				
	6-13	Eq. list amended				
	9-2, 7, 8	Supplement G23 added.				
7	0-1, 5, 7	Amended cover pages, ROR and LOEP.	A. Sabino	D. Ronca	M. Oliva	Approved under the authority of DOA, ref. EASA.21J.335 (MOD2006/357.190226)
	6-11, 6-13	Amended equipment list				
	9-2, 9-7, 9-8	Amended Supplements List.				
8	0-1, 5, 7	Amended cover pages, ROR and LOEP.	A. Sabino	D. Ronca	M. Oliva	Approved under the authority of DOA, ref. EASA.21J.335 (MOD2006/359.190404)
	9-all pages	Supplements list layout changed				
9	0-1, 5, 7	Amended cover page, ROR and LOEP.	G. Valentino	D. Ronca	M. Oliva	Approved under the authority of DOA, ref. EASA.21J.335 (MOD2006/362.190417)
	6-11	Amended Equipment List.				
	9-3	Amended Supplements List.				
10	0-1, 5, 7	Amended cover page, ROR and LOEP.	A. Sabino	D. Ronca	M. Oliva	Approved under the authority of DOA, ref. EASA.21J.335 (MOD2006/368.190719)
	3-1, 2, 22	Added electrical pitch trim failure				
	6-5,6,13	Amended weighing form and equipment List.				
	9-4	Amended Supplements List.				
11	0-1,5,7	Cover pages, ROR and LOEP updated	A. Glorioso (OJT) G. Valentino	D. Ronca	M. Oliva	Approved under the authority of DOA, ref. EASA.21J.335 (MOD2006/375.190826)
	3-22	Electrical pitch trim control failure procedures updated				
	9-3	Supplements List updated				
12	0-1,5,7	Cover pages, ROR and LOEP updated	A. Glorioso	D. Ronca	M. Oliva	Approved under the authority of DOA, ref. EASA.21J.335 (MOD2006/380.191111)
	9-1, 3, 4	Supplements List updated ant typo errors				

Rev	Revised page	Description of Revision	Tecnam Approval			EASA Approval or Under DOA Privileges
13	0-1, 6, 7	Cover pages, ROR and LOEP Updated and typo errors	A. Glorioso	D. Ronca	M. Oliva	Approved under the authority of DOA, ref. EASA.21J.335 (MOD2006/382.200129)
	4-16, 17	Update “Engine starting” checklist				
	5-17	Typo error				
	7-22	Updated description of Landing Gear System				
	9-2, 3, 4	Supplements List updated				
14	0-1, 6, 7	Cover pages, ROR and LOEP	G. Valentino	D. Ronca	M. Oliva	Approved under the authority of DOA, ref. EASA.21J.335 (MOD2006/389.200303)
	9-4	Supplements List updated				

2. LIST OF EFFECTIVE PAGES

The List of Effective Pages (LOEP), applicable to manuals of every operator, lists all the basic AFM pages: each manual could contain either basic pages or one variant of these pages when the pages of some Supplements are embodied.

Should the Supplements be embodied in accordance with approved instructions, make reference to the LOEP addressed on the Supplements themselves.

Ed 1 May 25, 2009
Ed 2 March 29, 2010
Ed 3 December 22, 2011
Ed 4 July 25, 2015

Section	Pages	Revision
Section 0	2, 3, 8, 9, 11	Rev 0
	4, 12	Rev 5
	5, 10	Rev 12
	1, 6, 7	Rev 14
Section 1	1 thru 5, 7 thru 18	Rev 0
	6	Rev 6
Section 2	1 thru 10, 13 thru 19, 21 thru 32	Rev 0
	11	Rev 5
	12, 20	Rev 6
Section 3	1, 2	Rev 10
	3 thru 21, 23 thru 54	Rev 0
	22	Rev 11
Section 4	1, 2, 5 thru 10, 12 thru 15, 18, 21, 26 thru 30	Rev 0
	4	Rev 2
	3, 11, 20	Rev 4
	19, 23	Rev 5
	22, 24, 25	Rev 6
	16, 17	Rev 13
Section 5	1 thru 15,18 thru 22	Rev 0
	16	Rev 2
	17	Rev 13
Section 6	1 thru 4, 7 thru 10, 14	Rev 0
	5, 6, 13	Rev 10
	12	Rev 5
	11	Rev 9
Section 7	1 thru 21, 23 thru 44	Rev 0
	22	Rev. 13
Section 8	1 thru 10	Rev 0
Section 9	1	Rev 12
	2, 3	Rev 13
	4	Rev 14
Supplements LOEP: make reference to the Supplements Cover Pages		

INTENTIONALLY LEFT BLANK

INTENTIONALLY LEFT BLANK

3. FOREWORD

Tecnam ***P2006T*** is a twin-engine four-seat aircraft with high cantilevered wing and tri-cycle retractable landing gear.

Section 1 supplies general information and it contains definitions, symbols explanations, acronyms and terminology used.

Before using the airplane, you are recommended to read carefully this manual: a deep knowledge of airplane features and limitations will allow you for operating the airplane safely.

For further information, please contact:

COSTRUZIONI AERONAUTICHE ***TECNAM*** *S.p.A.*

Via MAIORISE

CAPUA (CE) - ITALY

☎ +39 (0) 823.62.01.34 www.tecnam.com

4. SECTIONS LIST

General	Section 1 (a non-approved Chapter)
Limitations	Section 2 - **EASA Approved Chapter**
Emergency Procedures	Section 3 (a non-approved Chapter)
Normal Procedures	Section 4 (a non-approved Chapter)
Performances	Section 5 (a non-approved Chapter)
Weight and Balance	Section 6 (a non-approved Chapter)
Airframe and Systems description	Section 7 (a non-approved Chapter)
Airplane Care and Maintenance	Section 8 (a non-approved Chapter)
Supplements	Section 9 (*)

(*) EASA approved parts, if any, are reported on the supplements

INTENTIONALLY LEFT BLANK

SECTION 1 - GENERAL

INDEX

1. Introduction 3
2. Three-view and dimensions 4
3. Control Surfaces Travel Limits 6
4. Engine 6
5. Propeller 6
6. Governor 7
7. Fuel 7
8. Lubrication 7
9. Cooling 8
10. Maximum weights 8
11. Standard weights 8
12. Specific loadings 8
13. Acronyms and terminology 10
14. Unit conversion chart 15
15. Litres / US gallons conversion chart 16

INTENTIONALLY LEFT BLANK

1. INTRODUCTION

The Aircraft Flight Manual has been implemented to provide the owners with information for a safe and efficient use of the aircraft TECNAM P2006T.

Warning – Caution – Note

Following definitions apply to warnings, cautions and notes used in the Aircraft Flight Manual.

WARNING

The non-observation of the corresponding procedure can lead, as immediate effect, to a significant reduction of the flight safety.

CAUTION

The non-observation of the corresponding procedure can lead to an equipment damage which leads to a reduction of the flight safety in a short or longer time interval.

NOTE

Draws the attention to a procedure not directly related to safety of flight.

.

2. THREE-VIEW AND DIMENSIONS

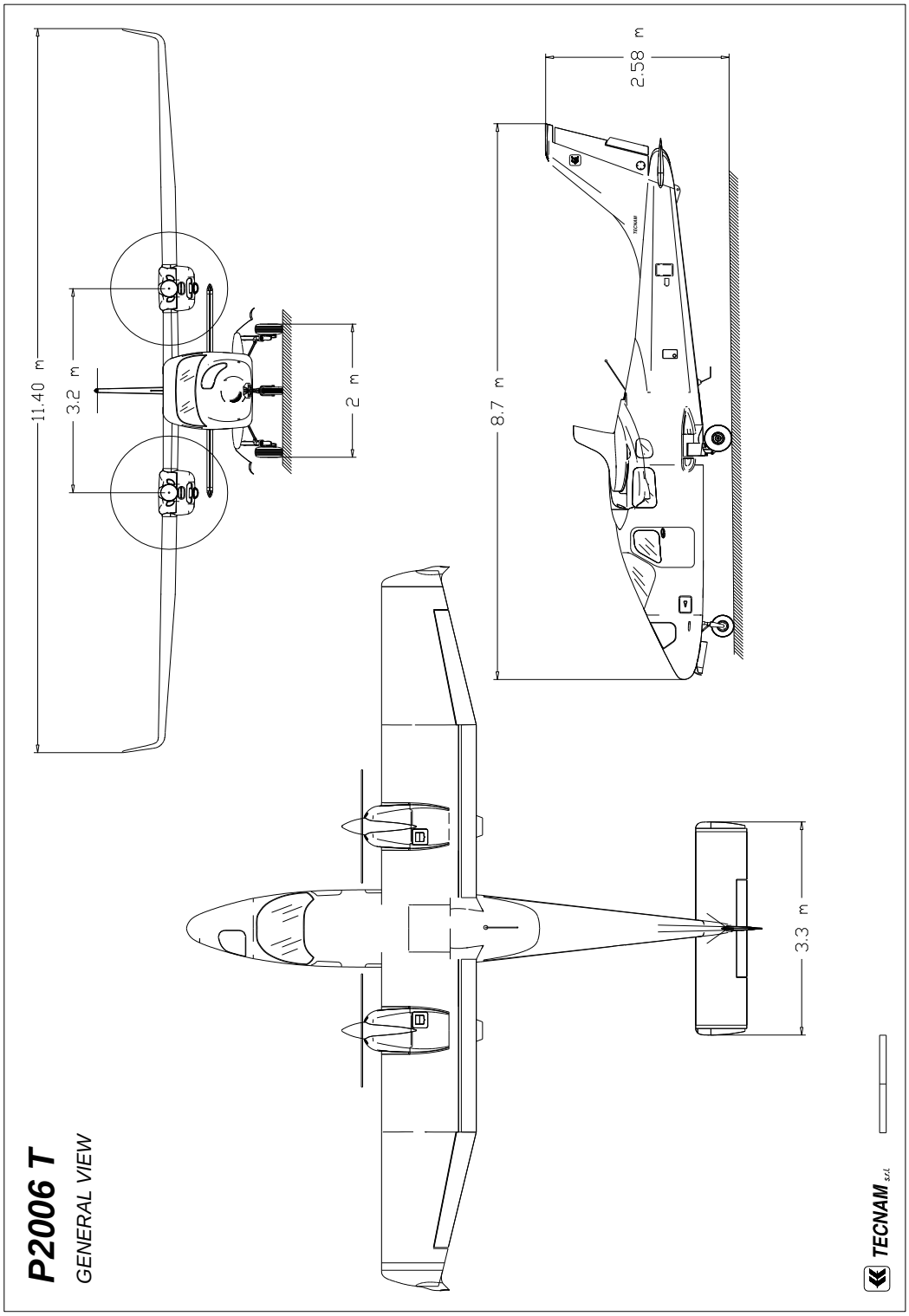

Figure 1 – General views

Dimensions

Overall dimensions		
Wingspan	11,4 m	37,4 ft
Length	8,7 m	28,5 ft
Overall height	2,58 m	8,46 ft
Wing		
Wing surface	14,76 m^2	158,9 ft^2
Mean Geometric Chord	1,295 m	4,25 ft
Dihedral	1°	
Aspect ratio	8,80	
Main Landing Gear		
Track		2.0 m
Wheelbase		2.9 m
Tire		6.00-6
Wheel rim assembly (Cleveland)		P/N 40-59A
Nose Landing Gear		
Tire		5.00 – 5
Wheel rim assembly (Cleveland)		P/N 40-77C

3. CONTROL SURFACES TRAVEL LIMITS

Ailerons	Up 20° Down 17 ° (± 2°)
Stabilator (refer to Trailing Edge)	Up 15° Down 4° (± 2°)
Stabilator trim tab (refer to Trailing Edge)	Up 2°; Down 19° (± 2°)
Rudder	RH 26° LH 26° (± 2°)
Rudder trim tab	RH 20° LH 20° (± 2°)
Flaps	0°; 40° (- 2°)

4. ENGINE

Manufacturer	Bombardier-Rotax GmbH
Model	912 S3
Certification basis	FAR 33 - Amendment 15
Type Certificate	EASA TCDS no. E.121 dated 1 April 2008
Engine type	4 cylinders horizontally opposed with 1352 c.c. of overall displacement, liquid cooled cylinder heads, ram-air cooled cylinders, two carburetors, integrated reduction gear box with torsional shock absorber and overload clutch.
Maximum power (at declared rpm)	73.5 kW (98.6hp) @ 5800 rpm –5 minutes maximum. 69.0 kW (92.5hp) @ 5500 rpm (continuous)

5. PROPELLER

Manufacturer	MT Propeller
Type Certificate	LBA 32.130/086 (MTV-21 series)
Model	MTV-21-A-C-F/CF178-05
Blades/hub	2 wood/composite blades – aluminum hub
Diameter	1780 mm (no reduction allowed)
Type	Variable pitch - hydraulically controlled

6. GOVERNOR

Manufacturer	Mt Propeller
Model	P-875-12
Type	Hydraulic

7. FUEL

Approved fuel:	MOGAS ASTM D4814
	MOGAS EN 228 Super/Super plus (min. RON 95)
	AVGAS 100LL (ASTM D910)
	(see also Section 2)
Fuel tanks	Two integrated tanks (one in each wing) fitted with drainable sump and drain valve
Capacity of each wing tan	100 litres (*26,42 US gallons)*
Tanks overall capacity	200 litres (*52,8 US gallons*)
Overall usable fuel	194.4 litres (*51,35 US gallons)*
Overall unusable fuel	5.6 litres (*1,48 US gallons)*

8. LUBRICATION

Lubrication system	Forced type with external reservoir
Oil	Use only oil with API classification **"SG"** or higher. For additional info, refer to "Rotax Operators Manual" – last issue -, "Operating Media" Section.
Oil capacity	Max. 3.0 litres – min. 2.0 litres *(per tank)*

9. COOLING

Cooling system	Ram-air cooled cylinders, liquid cooled cylinder heads (closed and pressurized circuit)
Coolant liquid	Certified for Water/Coolant mixture. Make reference to "Rotax Operators Manual" – last issue
Overall circuit capacity	1410 cm^3

10. WEIGHTS

See Section 2.

11. STANDARD WEIGHTS

Empty Weight: see weighing record on Section 6

12. SPECIFIC LOADINGS

	MTOW 1180 kg (2601 lb)	MTOW 1230 kg (2712 lb)
Wing Loading	80 kg/m^2 (16,37 lb/sqft)	83 kg/m^2 (17,1 lb/sqft)
Power Loading	6.0 kg/hp (13,26 lb/hp)	6.28 kg/hp (13,84 lb/hp)

NOTE. Reference is made to both MTOW: 1180 kg and 1230 kg (if Supplement A19 or G10 - Increased MTOW @1230 KG - is applicable).

INTENTIONALLY LEFT BLANK

13. ACRONYMS AND TERMINOLOGY

KCAS	Calibrated Airspeed is the indicated airspeed expressed in knots, corrected taking into account the errors related to the instrument itself and its installation.
KIAS	Indicated Airspeed is the speed shown on the airspeed indicator and it is expressed in knots.
KTAS	True Airspeed is the KCAS airspeed corrected taking into account altitude and temperature.
V_A	Design Manoeuvring speed is the speed above the which it is not allowed to make full or abrupt control movement.
V_{FE}	Maximum Flap Extended speed is the highest speed permissible with flaps extended.
V_{LO}	Maximum Landing Gear Operating speed is the maximum speed allowed to retract or to extend the landing gear.
V_{LE}	Maximum Landing Gear Extended speed is the maximum speed allowed with the landing gear extended.
V_{MC}	Minimum control speed: is the minimum speed necessary to ensure an efficient aircraft control in case of one engine inoperative.
V_{NO}	Maximum Structural Cruising Speed is the speed that should not be exceeded, except in smooth air and only with caution.
V_{NE}	Never Exceed Speed is the speed limit that may not be exceeded at any time.
V_O	Operating Manoeuvring speed is the speed above the which it is not allowed to make full or abrupt control movement
V_S	Stall Speed.
V_{S0}	Stall Speed in landing configuration (flaps and landing gear extended).
V_{S1}	Stall speed in the given flap and landing gear configuration.
V_{SSE}	Recommended safe simulated OEI speed is the minimum speed at which simulated OEI training operation should be executed.
V_X	Best Angle-of-Climb Speed is the speed which allows best ramp climb performances.
V_Y	Best Rate-of-Climb Speed is the speed which allows the best gain in altitude over a given time.
V_R	Rotation speed: is the speed at which the aircraft rotates about the pitch axis during takeoff
V_{YSE}	Best Rate-of-Climb speed in case of one engine inoperative.

Meteorological terminology

ISA	International Standard Atmosphere: is the air atmospheric standard condition at sea level, at 15°C (*59°F*) and at 1013.25hPa (*29.92inHg*).
QFE	Official atmospheric pressure at airport level: it indicates the aircraft absolute altitude with respect to the official airport level.
QNH	Theoretical atmospheric pressure at sea level: is the atmospheric pressure reported at the medium sea level, through the standard air pressure-altitude relationship, starting from the airport QFE.
OAT	Outside Air Temperature is the air static temperature expressed in degrees Celsius (°C).
T_S	Standard Temperature is 15°C at sea level pressure altitude and decreased by 2°C for each 1000 ft of altitude.
H_P	Pressure Altitude is the altitude read from an altimeter when the barometric subscale has been set to 1013 mb.

Aircraft performance and flight planning terminology

Crosswind Velocity	is the velocity of the crosswind component for the which adequate control of the airplane during takeoff and landing is assured.
Usable fuel	is the fuel available for flight planning.
Unusable fuel	is the quantity of fuel that cannot be safely used in flight.
G	is the acceleration of gravity.
TOR	is the takeoff distance measured from actual start to wheel liftoff point.
TOD	is total takeoff distance measured from start to 15m obstacle clearing.
GR	is the distance measured during landing from actual touchdown to stop point.
LD	is the distance measured during landing, from 15m obstacle clearing to actual stop.
S/R	is the specific range, that is the distance (in nautical miles) which can be expected at a specific power setting and/or flight configuration per kilogram of fuel used.

Weight and balance terminology

Datum	"Reference datum" is an imaginary vertical plane from which all horizontal distances are measured for balance purposes.
Arm	is the horizontal distance of an item measured from the reference datum.
Moment	is the product of the weight of an item multiplied by its arm.
C.G.	Center of Gravity is the point at which the airplane, or equipment, would balance if suspended. Its distance from the reference datum is found by dividing the total moment by the total weight of the aircraft.
Standard Empty Weight	is the weight of the aircraft with engine fluids and oil at operating levels.
Basic Empty Weight	is the standard empty weight to which it is added the optional equipment weight.
Useful Load	is the difference between maximum takeoff weight and the basic empty weight.
Maximum Takeoff Weight	is the maximum weight approved to perform the takeoff.
Maximum Landing Weight	is the maximum weight approved for the landing touchdown (for *P2006T* it is equivalent to the Maximum Takeoff Weight).

INTENTIONALLY LEFT BLANK

14. UNIT CONVERSION CHART

MOLTIPLYING		*BY ➔*	*YIELDS*	
TEMPERATURE				
Fahrenheit	[°F]	$\frac{5}{9}\cdot(F-32)$	Celsius	[°C]
Celsius	[°C]	$\left(\frac{9}{5}\cdot C\right)+32$	Fahrenheit	[°F]
FORCES				
Kilograms	[kg]	2.205	Pounds	[lbs]
Pounds	[lbs]	0.4536	Kilograms	[kg]
SPEED				
Meters per second	[m/s]	196.86	Feet per minute	[ft/min]
Feet per minute	[ft/min]	0.00508	Meters per second	[m/s]
Knots	[kts]	1.853	Kilometres / hour	[km/h]
Kilometres / hour	[km/h]	0.5396	Knots	[kts]
PRESSURE				
Atmosphere	[atm]	14.7	Pounds / sq. in	[psi]
Pounds / sq. in	[psi]	0.068	Atmosphere	[atm]
LENGTH				
Kilometres	[km]	0.5396	Nautical miles	[nm]
Nautical miles	[nm]	1.853	Kilometres	[km]
Meters	[m]	3.281	Feet	[ft]
Feet	[ft]	0.3048	Meters	[m]
Centimetres	[cm]	0.3937	Inches	[in]
Inches	[in]	2.540	Centimetres	[cm]
VOLUME				
Litres	[l]	0.2642	U.S. Gallons	[US Gal]
U.S. Gallons	[US Gal]	3.785	Litres	[l]
AREA				
Square meters	[m^2]	10.76	Square feet	[sq ft]
Square feet	[sq ft]	0.0929	Square meters	[m^2]

15. LITRES / US GALLONS CONVERSION CHART

Litres	US Gallons
5	1.3
10	2.6
15	4.0
20	5.3
25	6.6
30	7.9
35	9.2
40	10.6
45	11.9
50	13.2
60	15.9
70	18.5
80	21.1
90	23.8
100	26.4
110	29.1
120	31.7
130	34.3
140	37.7
150	39.6
160	42.3
170	44.9
180	47.6
190	50.2
200	52.8

US Gallons	Litres
1	3.8
2	7.6
3	11.4
4	15.1
6	22.7
8	30.3
10	37.9
12	45.4
14	53.0
16	60.6
18	68.1
20	75.7
22	83.3
24	90.9
26	98.4
28	106.0
30	113.6
32	121.1
34	128.7
36	136.3
38	143.8
40	151.4
45	170.3
50	189.3
55	208.2

INTENTIONALLY LEFT BLANK

INTENTIONALLY LEFT BLANK

SECTION 2 – LIMITATIONS

INDEX

1. Introduction 3
2. Speed limitations 5
3. Airspeed indicator markings 7
4. Powerplant limitations 9
5. Lubricant 10
6. Coolant liquid 10
7. Propeller 10
8. Governor 10
9. Maximum operating altitude 11
10. Ambient temperature 11
11. Powerplant instruments markings 12
12. Other instruments markings 12
13. Warnings, cautions and advisories lights 13
14. Weights 15
15. Center of gravity range 17
16. Approved maneuvers 19
17. Maneuvers load factor limits 19
18. Flight crew 19
19. Flight conditions 20
20. Fuel 20
21. Limitations placards 21
    - 21.1. Speed limitations 21
    - 21.2. Operating limitations 22
    - 21.3. Inflight engine restart 23
    - 21.4. Baggage compartment capacity 23
    - 21.5. Engine oil level 24
    - 21.6. Fuel type 24
    - 21.7. Landing Gear Hydraulic System 25
    - 21.8. Rear seats 26
    - 21.9. Other placards 27
22. Kinds of Operations Equipment List 29

INTENTIONALLY LEFT BLANK

1. INTRODUCTION

Section 2 includes operating limitations, instrument markings and basic placards necessary for safe operation of ***P2006T*** aircraft, its engines and standard systems and equipment.

This AFM Section is EASA approved.

INTENTIONALLY LEFT BLANK

2. SPEED LIMITATIONS

The following table addresses the airspeed limitations and their operational significance:

SPEED			KIAS	KCAS	REMARKS
V_{NE}	Never exceed speed		167	168	Do not exceed this speed in any operation.
V_{NO}	Maximum Structural Cruising Speed		135	133	Do not exceed this speed except in smooth air, and only with caution.
V_A	Design Manoeuvring speed		118	117	Do not make full or abrupt control movement above this speed, because under certain conditions the aircraft may be overstressed by full control movement.
V_O	Operating Manoeuvring speed				
V_{LE}	Maximum Landing Gear extended speed		93	92	Do not exceed this speed with the landing gear extended.
V_{LO}	Maximum Landing Gear operating speed		93	92	Do not exceed this speed when operating the landing gear.
V_{FE}	Maximum flaps extended speed	***FULL***	93	92	Do not exceed this speed for indicated flaps setting.
		T.O.	119	117	
V_{MC}	Aircraft minimum control speed with one engine inoperative		62	62	Do not reduce speed below this value in event of one engine inoperative condition.

INTENTIONALLY LEFT BLANK

3. AIRSPEED INDICATOR MARKINGS

Airspeed indicator markings and their colour code are explained in the following table.

MARKING	KIAS	EXPLANATION
White arc	**53-93**	Lower limit is V_{SO}, upper limit is the maximum allowable speed with flaps extended in *FULL* position.
Red line	**62**	Minimum aircraft control speed with one engine inoperative and flaps set to T.O.
Green arc	**66-135**	Normal aircraft operating range (lower limit is V_{S1}, stall speed in "clean" configuration, and upper limit is the maximum structural cruise speed V_{NO}).
Blue line	**80**	Best rate-of-climb speed with one engine inoperative at sea level.
Yellow arc	**135-167**	Speed range where manoeuvres must be conducted with caution and only in smooth air.
Red line	**167**	Maximum speed for all operations.

INTENTIONALLY LEFT BLANK

4. POWERPLANT LIMITATIONS

Following table reports the operating limitations for both engines installed:

ENGINE MANUFACTURER: Bombardier Rotax GmbH.

ENGINE MODEL: 912 S3

MAXIMUM POWER:

	Max Power kW *(hp)*	**Max rpm. Prop. rpm *(engine)***	**Time max. (minutes)**
Max. T.O.	73.5 *(98.6)*	2388 *(5800)*	5
Max. Cont.	69 *(92.5)*	2265 *(5500)*	-

Temperatures:

Max CHT*	135° C
Max CT	120° C
Min/Max Oil	50° C / 130° C
Oil normal operating range (approx.)	90° C / 110° C

* *applicable for Engines up to serial no. 4924543(included) and repaired engine which doesn't change the cylinder head n°3 with new one (part no. 413195)*

Oil Pressure:

Minimum	0.8 Bar / 12psi	(below 1400 rpm prop)
Normal	2 – 5 Bar / 29-73psi	(above 1400 rpm prop)
Maximum	7 Bar / 102 psi	(above 1400 rpm prop)

Engine starting: allowable temperature range

OAT Min	-25° C
OAT Max	+50° C

CAUTION

In event of cold starting operation, it is permitted a maximum oil pressure of 7 bar for a short period.

Fuel pressure:

Minimum	2.2 psi (0.15 Bar)
Maximum	5.8 psi (0.40 Bar) or 7.26 psi* (0.5 Bar)

**only applicable for fuel pump part no. 893110 or 893114*

5. LUBRICANT

Use only oil with API classification **"SG"** or higher.

For additional info, refer to "Rotax Operators Manual" – last issue -, "Operating Media" Section.

6. COOLANT LIQUID

Refer to "Rotax Operators Manual" – last issue -, "Operating Media" Section.

7. PROPELLER

MANUFACTURER:	MT Propeller
MODEL:	MTV-21-A-C-F-/CF178-05
TYPE:	wood/composite 2-blade, variable pitch hydraulically controlled and fully featherable
DIAMETER:	1780 mm (no reduction is permitted)

8. GOVERNOR

MANUFACTURER:	MT Propeller
MODEL:	P-875-12
OPERATION:	Hydraulically controlled (oil pressure to reduce the pitch)

9. MAXIMUM OPERATING ALTITUDE

Maximum operating altitude is 14000 ft (4260 m) MSL.

CAUTION

Flight crew is required to use supplemental oxygen according to applicable Air Operation Rules.

10. AMBIENT TEMPERATURE

Ambient temperature: from -25°C to +50°C.

WARNING

Flight in expected and/or known icing conditions is forbidden.

11. POWERPLANT INSTRUMENTS MARKINGS

Powerplant instrument markings and their colour code significance are shown below:

INSTRUMENT		RED LINE Minimum limit	GREEN ARC Normal operating	YELLOW ARC Caution	RED LINE Maximum limit
Propeller	rpm	----	580 - 2265	2265 - 2388	2388
Oil temp.	°C	50	90 – 110	50 – 90 110-130	130
			50 – 130(1)	----(2)	
CT	°C	----	50 – 120	----	120
CHT(3)	°C	----	50 – 135	----	135
Oil pressure	bar	0.8	2 - 5	0.8 - 2 5 - 7 (4)	7
Fuel press.	psi	2.2	2.2 - 5.8 or 7.2 (5)	----	5.8 or 7.2 (3)
Fuel Q.ty	litres	0(6)	----	----	----

12. OTHER INSTRUMENTS MARKINGS

INSTRUMENT	RED LINE Minimum limit	GREEN ARC Normal operating	YELLOW ARC Caution	RED LINE Maximum limit
Voltmeter	10,5 Volt	12 - 14 Volt	----	----

If MOD2006/212 is embodied, markings are unchanged so refer to the basic AFM for information.

1 Applicable for aircraft with MOD2006/280 embodied.

2 Applicable for aircraft with MOD2006/280 embodied.

3 Applicable for Engines up to serial no. 4924543(included) and repaired engine which doesn't change the cylinder head n°3 with new one (part no. 413195).

4 In event of cold starting operation, it is permitted a maximum oil pressure of 7 bar for a short period.

5 Only applicable for fuel pump part no. 893110 or 893114.

6 "0" indication shows the unusable fuel quantity (2,8 litres for each fuel tank).

13. WARNINGS, CAUTIONS AND ADVISORIES LIGHTS

Following table addresses the warning, caution and advisory lights installed (unless differently specified) on the annunciator panel:

Warnings (RED)	Cause
LH OVERVOLT	LH electric system overvoltage
RH OVERVOLT	RH electric system overvoltage
MAIN DOOR OPEN ALERT	Main door open and/or unlocked
REAR DOOR OPEN ALERT	Rear door open and/or unlocked
LH LOW COOLANT	Left engine - coolant liquid low level
RH LOW COOLANT	Right engine - coolant liquid low level
LH ENGINE FIRE	Left engine compartment: fire detected
RH ENGINE FIRE	Right engine compartment: fire detected
LG TRANSITION (warning light installed near the landing gear control lever)	One or more legs are in transition phase and/or the selected retracted/extended position is not yet reached.
Cautions (Amber)	**Cause**
LH GENERATOR	LH generator failure
RH GENERATOR	RH generator failure
EXT POWER	External electrical supply connected
PITOT HEAT	Pitot heating system failure/not activated
GEAR PUMP ON	LG pump electrically supplied
Advisories (Green)	**Indication**
LH FUEL PUMP	Left engine - electrical fuel pump ON
RH FUEL PUMP	Right engine - electrical fuel pump ON
PITOT HEAT	Pitot heating system ON
LG Down & Locked (3 advisory lights, one for each leg, installed near the landing gear control lever)	Landing gear extended and locked

INTENTIONALLY LEFT BLANK

14. WEIGHTS

Condition	Weight	
Maximum takeoff weight	1180 kg	2601 lb
Maximum landing weight	1180 kg	2601 lb
Maximum zero wing fuel weight	1145 kg	2524 lb

NOTE *Refer to Para. 21.4 of this AFM Section for baggage loading limitations.*

INTENTIONALLY LEFT BLANK

15. CENTER OF GRAVITY RANGE

Datum	Vertical plane tangent to the wing leading edge (the aircraft must be levelled in the longitudinal plane)
Levelling	Refer to the seat track supporting beams (see procedure in Section 6)
Forward limit	0.221 m (16.5% MAC) aft of datum for all weights
Aft limit	0.415 m (31% MAC) aft of datum for all weights

WARNING

The pilot is responsible for ensuring that the airplane is properly loaded. Refer to Section 6 for appropriate instructions.

INTENTIONALLY LEFT BLANK

16. APPROVED MANEUVERS

The aircraft is certified in normal category in accordance with EASA CS-23 regulation.

Non aerobatic operations include:

- Any manoeuvre pertaining to "normal" flight
- Stalls (except whip stalls)
- Lazy eights
- Turns in which the angle of bank is not more than 60°
- Chandelle

WARNING

Acrobatic manoeuvres, including spins and turns with angle of bank of more than 60°, are not approved for such a category. In addition, stall with one engine inoperative is forbidden.

WARNING

Limit load factor could be exceeded by moving flight controls to maximum deflection at a speed above V_A=V_O (118 KIAS, Manoeuvring Speed).

17. MANEUVERS LOAD FACTOR LIMITS

Maneuver load factors limits are as follows:

Positive	**Negative**
+ 3.8 g	**- 1.78 g**

Maneuver load factors limits with flaps extended are as follows:

Positive	**Negative**
+ 2 g	**0 g**

18. FLIGHT CREW

Minimum crew:	1 pilot
Maximum number of occupants:	4 people (including the pilot)

19. FLIGHT CONDITIONS

The aircraft can be equipped for following flight operations (make reference to Para. 22 concerning the equipment list required on board to allow them):

- VFR Day and Night
- IFR Day and Night including IMC

WARNING

Flight in expected and/or known icing conditions, in proximity of storms or severe turbulence is forbidden.

NOTE

Additional equipment can be required to fulfil national or specific operational requirements. The owner is responsible for fulfilling these requirements.

NOTE

Equipment list is addressed in Section 6.

20. FUEL

2 TANKS:	100 litres each one (*26,42 US gallons)*
MAXIMUM CAPACITY:	200 litres (*52,8 US gallons*)
MAXIMUM USABLE FUEL:	194.4 litres (*51,35 US gallons)*
APPROVED FUEL:	MOGAS ASTM D4814
	MOGAS EN 228 Super/Super plus (min. RON 95)
	AVGAS 100 LL (ASTM D910)

CAUTION

Prolonged use of Aviation Fuel Avgas 100LL results in greater wear of valve seats and greater combustion deposits inside cylinders due to higher lead content. It is therefore suggested to avoid using this type of fuel unless strictly necessary. Make reference to Rotax Maintenance Manual which prescribes dedicated checks due to the prolonged use of Avgas.

21. LIMITATIONS PLACARDS

Hereinafter the placards, related to the operating limitations and installed on ***P2006T***, are reported.

21.1. SPEED LIMITATIONS

On the left side instrument panel, above on the left, it is placed the following placard reporting the speed limitations:

Manouvering speed

V_O = 118 KIAS

Maximum L.G. op. speed

V_{LO} / V_{LE} = 93 KIAS

21.2. OPERATING LIMITATIONS

On the instrument panel, it is placed the following placard reminding the observance of aircraft operating limitations; make reference to Para. 22 for the list of equipment required on board to allow flight operations in VFR Day, VFR Night, IFR Day and IFR Night conditions.

This A/C can be operated only in normal category DAY-NIGHT-VFR-IFR (with required equipment) in non-icing conditions. All aerobatics manoeuvres including spinning are prohibited. For operational limitations refer to FLIGHT MANUAL

21.3. INFLIGHT ENGINE RESTART

The inflight engine restart procedure is reported on a placard (shown below) installed on the central console.

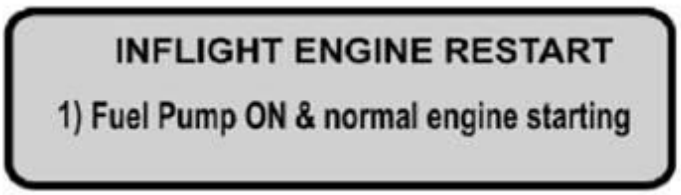

21.4. BAGGAGE COMPARTMENT CAPACITY

The placard shown below, and installed on the baggage compartment (vertical panel), concerns the baggage compartment load limitations herein reported:

- Maximum allowable load: 80kg/176lb
- Maximum intensity of loading: 0.9 kg/dm^2 – 19 lbs/sqft

21.5. ENGINE OIL LEVEL

On the engine nacelle, in correspondence of the engine oil reservoir access door, it is located the following placard addressing the limitations concerning the oil level, the oil volume and the oil type.

USE ONLY OIL WITH API
CLASSIFICATION SG OR HIGHER

21.6. FUEL TYPE

In correspondence of each fuel tank filler cap, it is located the following placard reporting the approved fuel type and the tank usable fuel.

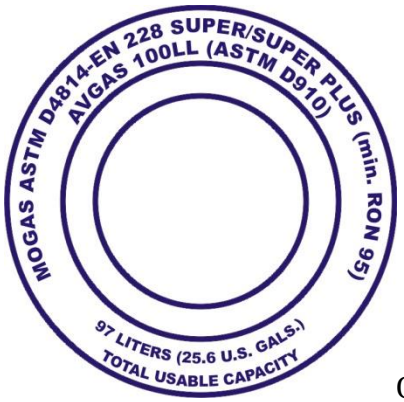

OR

MOGAS ASTM D4814-EN 228
SUPER/SUPER PLUS (min. RON 95)
AVGAS 100LL (ASTM D910)

97 LITERS (25.6 U.S. GALS.)
TOTAL USABLE CAPACITY

21.7. LANDING GEAR HYDRAULIC SYSTEM

The placard shown below, and located on the tail cone, concerns the allowed low pressure limit for the landing gear emergency accumulator.

The low pressure limit is **20 bar**.

If during pre-flight inspection the value is below **20 bar**, the system must be re-charged by means of the override button (see Section 7, Para. 9).

21.8. REAR SEATS

During Taxi, Take OFF, Landing (including Emergency Landing), both rear seats must be kept in the lowest and full aft position.

The following placard is located aside both rear seats.

Rear seats must be kept in lowest and full aft position during Taxi, Take Off, Landing and Emergency Landing

21.9. OTHER PLACARDS

Description	Placard	Place
Smoking ban	NO SMOKING	Instruments panel, right side
Ditching emergency exit: opening instructions		Ditching emergency exit handle: internal side
Ditching emergency exit: opening instructions		Ditching emergency exit handle: external side
Door locking system: bypass instructions		Main door and emergency exit: external side
Door locking system: bypass instructions		Main door and emergency exit: internal side
Main door: exit instructions		Main door, internal side
Emergency exit label	EMERGENCY EXIT	Emergency exit: internal and external side

INTENTIONALLY LEFT BLANK

22. KINDS OF OPERATIONS EQUIPMENT LIST

This paragraph reports the KOEL table, concerning the equipment list required on board under CS-23 regulations to allow flight operations in VFR Day, VFR Night, IFR Day and IFR Night conditions.

Flight in VFR Day and Night, IFR Day and Night is permitted only if the prescribed equipment is installed and operational.

Additional equipment, or a different equipment list, for the intended operation may be required by national operational requirements and also depends on the airspace classification and route to be flown.

Equipment	VFR Day	VFR Night	IFR Day	IFR Night
Magnetic compass	●	●	●	●
Airspeed indicator	●	●	●	●
Altimeter	●	●	●	●
Vertical speed indicator	●	●	●	●
Attitude indicator (electric)	●	●	●	●
Turn coordinator	●	●	●	●
OAT indicator	●	●	●	●
Pitot heating system	●	●	●	●
Directional Gyro (electric)	●	●	●	●
Clock	●	●	●	●
Breakers panels	●	●	●	●
First Aid kit	●	●	●	●
Fire extinguisher	●	●	●	●
Fire detectors (2)	●	●	●	●
Instruments lights	●	●	●	●
Position lights	●	●	●	●
Landing light	●	●	●	●
Taxi light	●	●	●	●
Strobe lights	●	●	●	●
Torch		●	●	●
Cabin light		●	●	●
Cockpit lights		●	●	●
Emergency light	●	●	●	●
Volt-Ammeter	●	●	●	●
COMM/NAV/GPS equipment	●	●	●	●
VOR/LOC/GS/GPS CDI	●	●	●	●
LG position and transition lights	●	●	●	●
Transponder	●	●	●	●
Audio Panel/Marker beacon	●	●	●	●
Altitude encoder	●	●	●	●
ELT	●	●	●	●
Alternate static source	●	●	●	●
MAP indicator (dual)	●	●	●	●
RPM indicator (2)	●	●	●	●
Oil pressure indicator (2)	●	●	●	●
Oil temperature indicator (2)	●	●	●	●
CHT (2)	●	●	●	●
Fuel pressure indicator (2)	●	●	●	●
Fuel quantity indicator (2)	●	●	●	●
Longitudinal trim indicator	●	●	●	●
Rudder trim indicator	●	●	●	●
Flaps position indicator	●	●	●	●
Stall warning system	●	●	●	●
Annunciator panel	●	●	●	●
2nd VHF COMM/NAV equipment		●	●	●
2nd VOR/LOC/GS CDI			●	●
DME			●	●
ADF			●	●
2nd Airspeed indicator			●	●
2nd Attitude indicator (electric)			●	●
2nd Altimeter			●	●
	VFR Day	VFR Night	IFR Day	IFR Night

INTENTIONALLY LEFT BLANK

INTENTIONALLY LEFT BLANK

SECTION 3 – EMERGENCY PROCEDURES

INDEX

1. Introduction 3

1.1. Engine failure during takeoff run 3

2. Airplane alerts 5

2.1. Single generator failure / overvoltage 5
2.2. Both generators failure 6
2.3. Both generators overvoltage 7
2.4. Failed door closure 8
2.5. Pitot heating system failure 9
2.6. Coolant liquid low level 10
2.7. Gear Pump failure 11
2.8. Engine fire 12

3. Engine securing 13

4. Powerplant emergencies 14

4.1. Propeller overspeeding 14
4.2. CHT/CT limit exceedance 14
4.3. Oil temperature limit exceedance 15
4.4. Oil pressure limits exceedance 16
4.5. Low fuel pressure 17

5. Other emergencies 18

5.1. Emergency descent 18
5.2. Total electrical failure 18
5.3. Static ports failure 19
5.4. Unintentional flight into icing conditions 20
5.5. Carburettor icing 21
5.6. Flaps control failure 22
5.7. Electrical pitch trim control failure 22

6. One engine inoperative procedures 23

6.1 Characteristic airspeeds with one engine inoperative 24
6.2 Inflight engine restart 25
6.3 Engine failure during takeoff run 26
6.4 Engine failure during climb 28
6.5. Engine failure in flight 29
6.6. One engine inoperative landing 30

7. Landing gear failures 32

7.1. Emergency landing gear extension 32

7.2. Complete Gear up or nose gear up landing 33
7.3. Partial Main LG extension 34
7.4. Failed retraction 36
7.5. Unintentional landing gear extension 36

8. Smoke and fire occurrence 38

8.1 Engine fire on the ground 38
8.2 Engine fire during takeoff run 39
8.3 Engine fire in flight 41
8.4 Electrical smoke in cabin on the ground 41
8.5 Electrical smoke in cabin during flight 42

9. Unintentional spin recovery 44

10. Landing emergencies 46

10.1 Landing without engine power 46
10.2 Landing with Nose landing gear tire deflated 48
10.3 Landing with a known main landing gear tire deflated 49
10.4 Landing without brakes 50

11. Aircraft evacuation 51

12. Ditching 52

1. INTRODUCTION

Section 3 includes checklists and detailed procedures for coping with various types of emergency conditions that could arise after a system failure.

Before operating the aircraft, the pilot should become thoroughly familiar with this manual and, in particular, with this Section. Further on a continued and appropriate training and self-study should be done.

Emergency procedures associated with those optional systems and equipment which require handbook supplements are provided in separate Supplements.

Two types of emergency procedures are hereby given.

a. "BOLD FACES" which must be known by heart by the pilot and executed, in the correct and complete sequence, immediately after the failure is detected and confirmed.
These procedures characters are boxed and highlighted:

1.1. ENGINE FAILURE DURING TAKEOFF RUN

BEFORE ROTATION: ABORT TAKE OFF

1.	**Throttle Lever**	***BOTH IDLE***
2.	**Rudder**	***Keep heading control***
3.	- -	
4.	- -	

b. "other procedures" which should be well theoretically known and mastered, but that can be executed entering and following step by step the AFM current section appropriate checklist.

In any case, as a failure or abnormal behaviour is detected pilots should act as follows:

1. *Keep self-control and maintain aircraft flight attitude and parameters*
2. *Analyse the situation identifying, if required, the area for a possible emergency landing*
3. *Apply the pertinent procedure*
4. *Inform the Air Traffic Control as applicable*

NOTE

For the safe conduct of later flights, any anomaly and/or failure must be communicated to the National Authorities in charge, in order to put the aircraft in a fully operational and safe condition.

NOTE

In this Chapter, following definitions apply:
***Land as soon as possible**: land without delay at the nearest suitable area at which a safe approach and landing is assured.*
***Land as soon as practical**: land at the nearest approved landing area where suitable repairs can be made.*

2. AIRPLANE ALERTS

The annunciator panel, located on the left side instrument panel, contains 16 lights for warnings, cautions and advisories. The colours are as follows:

GREEN: to indicate that pertinent device is turned ON
AMBER: to indicate no-hazard situations which have to be considered and which require a proper crew action
RED: to indicate emergency conditions

2.1. SINGLE GENERATOR FAILURE / OVERVOLTAGE

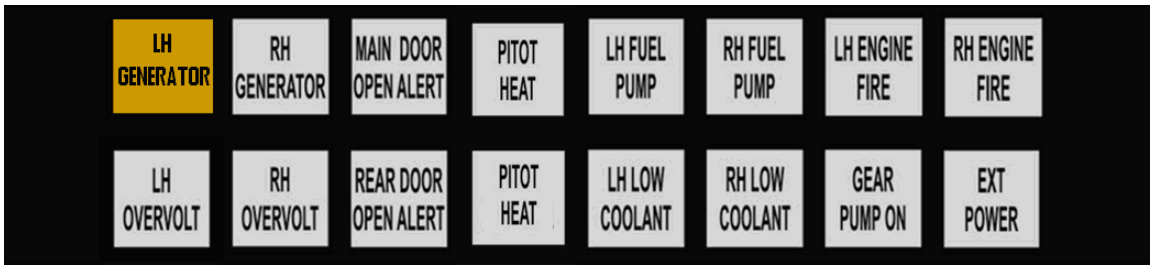

In event of LH or RH GENERATOR caution light turned ON, apply following procedure:

1. FIELD LH (or RH) *OFF*
2. FIELD LH (or RH) *ON*

If the LH (or RH) GENERATOR caution stays displayed

3. FIELD LH (or RH) *OFF*
4. Avionic LH *OFF*
5. ADF *OFF*

NOTE *Switching OFF avionic LH and ADF will permit to shed non essential electrical power.*
The battery and a single generator are able to supply the electrical power necessary for flight, but redundancy is lost.

If conditions permit:

NOTE *Switching CROSS BUS OFF will further reduce alternator load; the decision mainly depends on weather conditions.*

6. CROSS BUS LH (or RH) OFF

Equipment will be lost accordingly to the following table:

LH Gen Bus	LH Avionic Bus	RH Avionic Bus	RH Gen Bus
Pitot Heat	DME	ADF	NAV Lights
Landing Light	Transponder	COM 2	Rudder Trim
Taxi Light	Encoder Altimeter	NAV 2	Stall Warning
		A/P	RH attitude indicator
		A/P Pitch Trim	

7. **Land as soon as practicable**

2.2. BOTH GENERATORS FAILURE

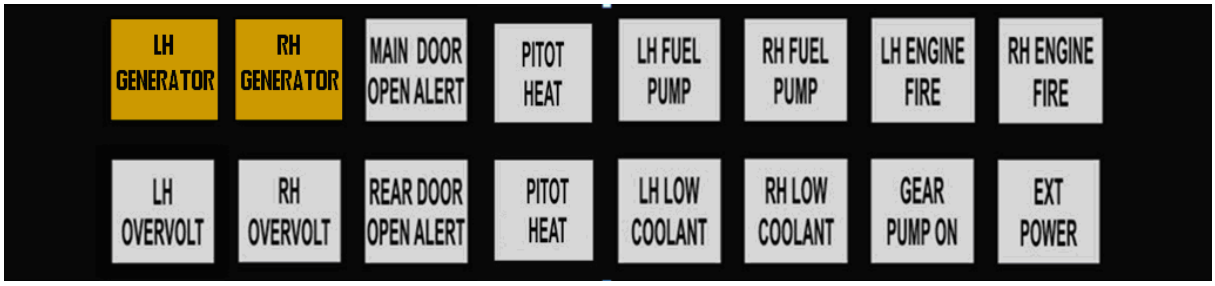

In event of both LH and RH GENERATOR caution lights turned ON:

1. FIELD LH and RH *BOTH OFF*
2. FIELD LH and RH *BOTH ON*

<u>If the LH (or RH) GENERATOR caution stays displayed</u>

3. Verify good ammeter indications on restored alternator
4. Refer to Single generator failure / overvoltage drill (Para 2.1)

<u>If both LH and RH GENERATOR cautions stay displayed</u>

3. FIELD LH and RH *BOTH OFF*
4. CROSS BUS LH and RH *BOTH OFF*

<u>If engine starting battery modification is applied</u>

5. EMERG BATT switch ON
6. **Land as soon as practical**.

<u>If engine starting battery modification is not applied</u>

5. **Land as soon as possible**.

Equipment will be lost accordingly to the following table:

LH Gen Bus	LH Avionic Bus	RH Avionic Bus	RH Gen Bus
Pitot Heat	DME	ADF	NAV Lights
Landing Light	Transponder	COM 2	Rudder Trim
Taxi Light	Encoder Altimeter	NAV 2	Stall Warning
		A/P	RH attitude indicator
		A/P Pitch Trim	

NOTE *The battery alone can supply electrical power for at least 30 minutes.*

2.3. BOTH GENERATORS OVERVOLTAGE

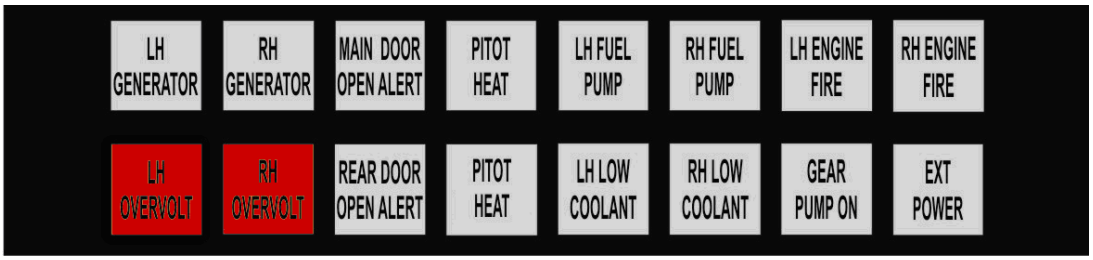

In event of both LH and RH OVERVOLT warning lights turned ON:

1. FIELD LH and RH *BOTH OFF*
2. FIELD LH and RH *BOTH ON*

<u>If the LH (or RH) GENERATOR caution stays displayed</u>

3. Verify good ammeter indications on restored alternator
4. Refer to Single generator failure / overvoltage drill (Para 2.1)

<u>If both LH and RH OVERVOLT warning stay displayed</u>

3. CROSS BUS LH and RH *BOTH OFF*
4. FIELD LH and RH *BOTH OFF*
5. FIELD LH and RH *BOTH ON*

<u>If LH (or RH) OVERVOLT warning stays displayed</u>

6. Verify good ammeter indications on restored alternator
7. Switch CROSS BUS on the restored alternator side
8. Refer to Single generator failure / overvoltage drill (Para 2.1)

<u>If both LH and RH OVERVOLT warning stay displayed</u>

6. FIELD LH and RH *BOTH OFF*

<u>If engine starting battery modification is applied</u>

7. EMERG BATT switch ON

LH Gen Bus	LH Avionic Bus	RH Avionic Bus	RH Gen Bus
Pitot Heat	DME	ADF	NAV Lights
Landing Light	Transponder	COM 2	Rudder Trim
Taxi Light	Encoder Altimeter	NAV 2	Stall Warning
		A/P	RH attitude indicator
		A/P Pitch Trim	

8. **Land as soon as practical.**

<u>If engine starting battery modification is not applied</u>

7. **Land as soon as possible**.

Equipment will be lost accordingly to the following table:

NOTE *The battery alone can supply electrical power for at least 30 minutes.*

2.4. FAILED DOOR CLOSURE

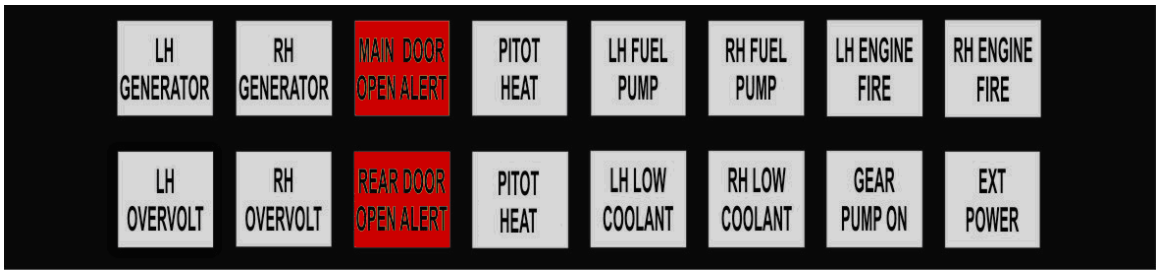

In case of door opening / unlocking, related MAIN or REAR DOOR ALERT warning light turns ON.

ON THE GROUND

1. Passengers and crew seat belts — *Fasten and tighten*
2. Affected door — *Verify correctly closed*

If door is open

3. Relevant engine — *Shut down*
4. Affected door — *Close and check*

If door is closed

3. Locking device — *Check*

If down in unlocked position

4. Abort mission.

IN FLIGHT

1. Passengers and crew seat belts — *Fasten and tighten*
2. Affected door and locked device — *Verify correctly closed*

If door is open or locking device is unlocked

3. **Land as soon as possible**

2.5. PITOT HEATING SYSTEM FAILURE

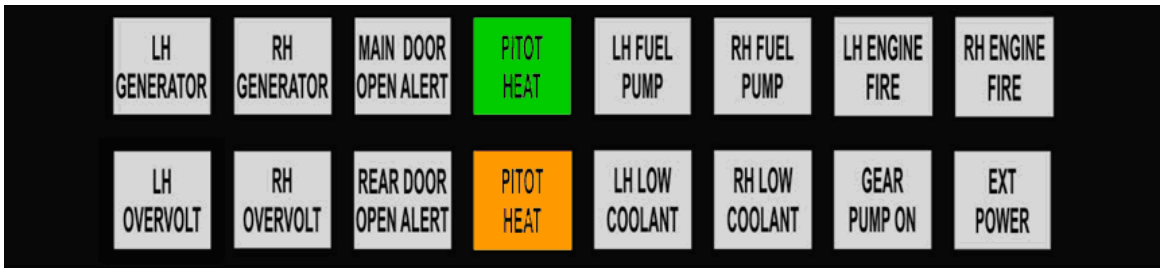

When the Pitot Heating system is activated, the green PITOT HEAT advisory light is turned ON.
If the amber PITOT HEAT caution light turns OFF, then the Pitot Heating system is functioning properly. Anytime the amber PITOT HEAT caution light is ON at the same time the green PITOT HEAT light is ON, then the Pitot Heating system is not functioning properly.

1. Pitot heat switch *OFF*
2. Verify Pitot Heating circuit breaker is IN
3. Pitot heat switch *ON*
4. Check PITOT HEAT caution light:

If the amber light stays ON, assume a failure in the pitot heating system.
Avoid visible moisture and OATs below 10 deg C.

2.6. COOLANT LIQUID LOW LEVEL

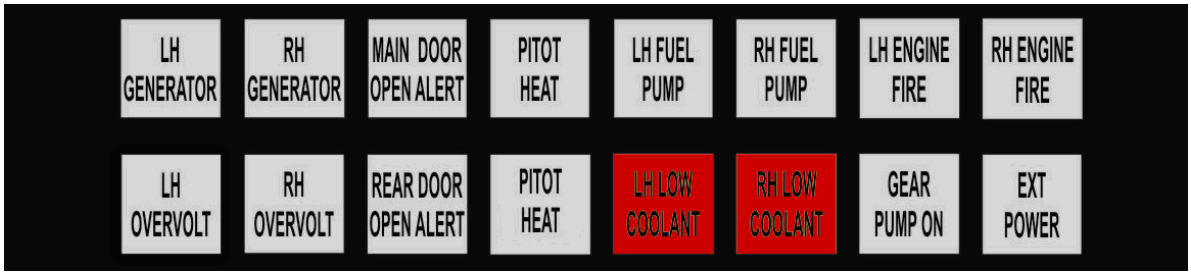

When the engine coolant liquid level goes under the lower limit, the related LH or RH LOW COOLANT is turned ON. This condition may lead to high CHT/CT. When the warning light turns ON, apply following procedure:

1. Check affected engine CHT/CT

<u>If CHT is above 135°C or CT is above 120°C</u>

2. Affected engine — *Reduce power setting to reduce CHT/CT up to the minimum practical*
3. **Land as soon as practical**

<u>If CHT/CT continues to rise and engine shows roughness or power loss</u>

4. Affected engine — *SECURE (securing procedure on Para. 4)*
5. **Land as soon as possible** applying *one engine inoperative landing* procedure. See Para. 6.6

2.7. GEAR PUMP FAILURE

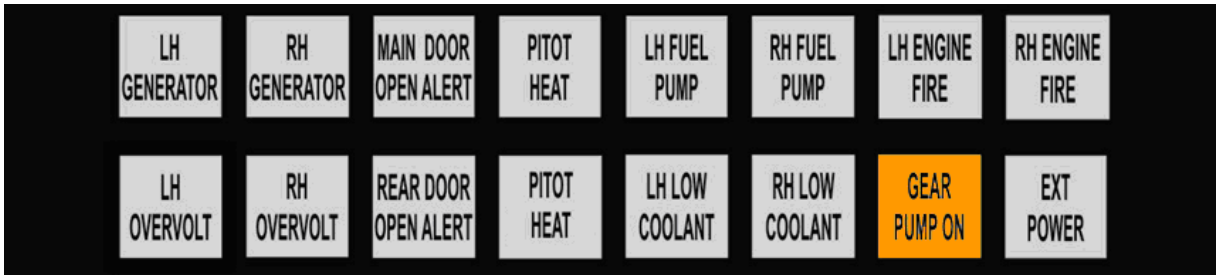

The GEAR PUMP ON caution light turns ON when the landing gear hydraulic pump is electrically supplied.

After the landing gear retraction, if the red TRANS light turns OFF and the GEAR PUMP ON caution stays turned ON, this could indicate a gear pump relay failure to ON.

<u>If TRANS light is OFF</u>

1. Continue the mission monitoring the caution light.

<u>If TRANS light is ON</u>

2. Landing gear is not locked in UP position

NOTE

The electrical gear pump, continuously supplied, causes a current absorption which does not affect the mission unless this failure is coupled with the overall electrical failure. In this case, the residual battery endurance may be consistently lower than 30 minutes.

2.8. ENGINE FIRE

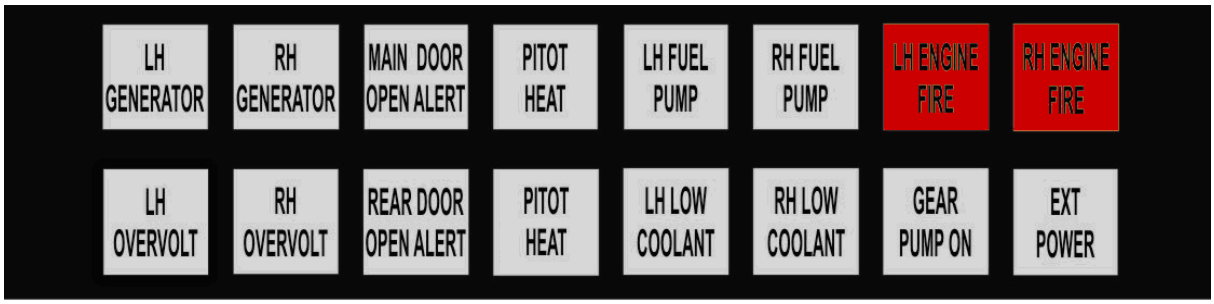

In event of engine fire, LH or RH ENGINE FIRE warning light will turn ON. Refer to following procedures:

FIRE ON THE GROUND:	see Para. 8.1
FIRE DURING TAKEOFF RUN:	see Para. 8.2
FIRE IN FLIGHT:	see Para. 8.3

3. ENGINE SECURING

Following procedure is applicable to shut-down one engine in flight:

1.	**Throttle Lever**	***IDLE***
2.	**Ignition**	***BOTH OFF***
3.	**Propeller Lever**	***FEATHER***
4.	**Fuel Selector**	***OFF***
5.	**Electrical fuel pump**	***OFF***

After securing engine(s), after analysing situation, refer immediately to following procedures:

ENGINE FAILURE IN FLIGHT:	see Para. 6.5
SINGLE GENERATOR FAILURE:	see Para. 2.1
or BOTH GENERATOR FAILURE:	see Para. 2.2
INFLIGHT ENGINE RESTART:	see Para. 6.2
ONE ENGINE INOPERATIVE LANDING:	see Para. 6.6
or LANDING WITHOUT ENGINE POWER:	see Para. 10.1

4. POWERPLANT EMERGENCIES

4.1. PROPELLER OVERSPEEDING

The aircraft is fitted with propeller/governor set by MT-Propeller such a way that the maximum propeller rpm exceedance is prevented. In case of propeller over-speeding in flight, apply following procedure:

1.	Throttle Lever	*REDUCE power to minimum practical*
2.	Propeller Lever	*REDUCE as practical (not in feathering)*
3.	RPM indicator	*CHECK*

If it is not possible to decrease propeller rpm, apply *engine securing procedure* (see Para. 3) and **land as soon as possible a**pplying *one engine inoperative landing* procedure (See Para. 6.6).

CAUTION

Maximum propeller rpm exceedance may cause engine components damage. Propeller and engine shall be inspected in accordance with related Operators Manuals.

4.2. CHT/CT LIMIT EXCEEDANCE

If CHT/CT exceeds its limit, apply following procedure:

1. Check affected engine CHT/CT

If CHT is above 135°C or CT is above 120°C

2. Affected engine — *Reduce power setting to reduce CHT/CT up to the minimum practical*
3. **Land as soon as practical**

If CHT/CT continues to rise and engine shows roughness or power loss

4. Affected engine — *SECURE (securing procedure on Para. 4)*
5. **Land as soon as possible** applying *one engine inoperative landing* procedure. See Para. 6.6

4.3. OIL TEMPERATURE LIMIT EXCEEDANCE

If oil temperature exceeds maximum limit (130°C):

1. OIL PRESS *CHECK*

If oil pressure is within limits

2. Affected engine *Reduce power setting to minimum applicable*
3. Affected engine *Keep propeller speed higher than 2000 RPM*

If oil pressure does not decrease

4. Airspeed *INCREASE*

NOTE

If oil temperature does not come back within limits, the thermostatic valve, regulating the oil flow to the heat exchangers, could be damaged or an oil leakage can be present in the oil supply line.

5. **Land as soon as practical** keeping the affected engine to the minimum necessary power
6. Monitor OIL PRESS and CHT/CT

if engine roughness / vibrations or erratic behaviour is detected:

7. Affected engine *SECURE (see engine securing procedure on Para. 3)*
8. **Land as soon as possible** applying *one engine inoperative landing* procedure. See Para. 6.6

WARNING

Excessive oil pressure drop leads to a high pitch propeller configuration with consequent propeller feathering and engine stopping.

4.4. OIL PRESSURE LIMITS EXCEEDANCE

If oil pressure exceeds its lower or upper limit (0.8 – 7 bar), apply following procedure:

WARNING

Excessive oil pressure drop leads to a high pitch propeller configuration with consequent propeller feathering and engine stopping.

NOTE

An excessive oil pressure value can be counteracted by decreasing propeller rpm.

1. OIL PRESS *CHECK*

If oil pressure exceeds upper limit (7 bar)

2. Throttle Lever *first REDUCE affected engine power by 10%*
3. Propeller Lever *Keep low rpm*
4. OIL PRESS *CHECK (verify if within limits)*
5. **Land as soon as practical**

If oil pressure is under the lower limit (0.8 bar)

2. **Land as soon as practical**

If oil pressure is continuously decreasing

3. Affected engine *SECURE (see engine securing procedure Para. 3)*
4. **Land as soon as possible** applying *one engine inoperative landing* procedure. See Para. 6.6

4.5. LOW FUEL PRESSURE

If fuel pressure decreases below the lower limit (2.2 psi), apply following procedure:

1. Fuel press *CHECK*
2. Fuel quantity *CHECK*
3. Fuel consumption *MONITOR*

If a fuel leakage is deemed likely

4. **Land as soon as possible**.

If a fuel leakage can be excluded:

4. Electrical fuel pump *ON*
5. Feed the affected engine by means of opposite side fuel tank

If pressure does not come back within the limits

6. **Land as soon as practical**

5. OTHER EMERGENCIES

5.1. EMERGENCY DESCENT

CAUTION

Descent with airspeed at VLE, idle power and gear down will provide high descent rates and pitch attitudes up to -15°.

Anticipate altitude capture and return to level flight during emergency descent in order to assure a safe and smooth recovery from maneuver.

1.	Power levers	*IDLE*
2.	Flaps	*UP*
3.	IAS	*below VLO/VLE*
4.	Landing gear	*DOWN*
5.	Airspeed	Up to *VLO/VLE*

5.2. TOTAL ELECTRICAL FAILURE

In case of electrical system overall failure, apply following procedure:

1.	Emergency light	*ON if necessary*
2.	Standby attitude indicator switch	*ON*
3.	MASTER SWITCH	*OFF*
4.	FIELD LH and RH	*BOTH OFF*
5.	MASTER SWITCH	*ON*
6.	FIELD LH and RH	*BOTH ON*

If failure persists

9.	EMERG BATT switch	ON (if engine starting battery installed)

10. **Land as soon as possible** applying *emergency landing gear extension* procedure (see Para. 7.1)

WARNING

An electrical system overall failure prevents flaps operation: landing distance without flaps increases of about 25%.

CAUTION

A fully charged battery can supply electrical power for at least 30 minutes.

5.3. STATIC PORTS FAILURE

In case of static ports failure, the alternate static port in the cabin (shown below) must be activated.

1. Cabin ventilation *OFF (hot and cold air)*
2. ALTERNATE STATIC PORT VALVE *OPEN*
3. Continue the mission

5.4. UNINTENTIONAL FLIGHT INTO ICING CONDITIONS

1. Carburettor heat *BOTH ON*
2. Pitot heat *ON*
3. Fly as soon as practical toward a zone clear of visible moisture, precipitation and with higher temperature, changing altitude and/or direction.
4. Control surfaces *Move continuously to avoid locking*
5. Propellers rpm *INCREASE to prevent ice build-up on the blades*

WARNING

In event of ice build-up in correspondence of wing leading edges, stall speed increases.

WARNING

Ice build-up on wing, tail fin or flight control surfaces unexpected sudden roll and/or pitch tendencies can be experienced and may lead to unusual attitude and loss of aircraft control.

WARNING

Do not use Autopilot when icing formation is suspected or detected.

5.5. CARBURETTOR ICING

DURING TAKEOFF

The carburettor icing in "full throttle" mode is unlikely.

Take off in known or suspected icing condition is forbidden.

Therefore, and in order to dispose of full engine take off power, the take-off must be performed with carburettor heating OFF.

IN FLIGHT

Carburettor icing is considered probable when external air temperature is below 15° C and visible air moisture (clouds, mist, haze or fog) or atmospheric precipitation are present.

Generally, an OAT-to-dew point temperature spread lower than 10°C and OAT less than 15°C with visibility lower than 5 km is a positive indication of likely icing formation condition.

Should an inadvertent flight into known or forecast icing condition happen carburettor heating should be selected "ON" as soon as possible: the earlier carburettors are warmed the better the chances not to form ice and avoid engine loss or reduction of power.

Keep Carb Heating "ON" until engine power is restored and area of possible icing condition is exited.

CAUTION

Carburettor Heating to "ON" will cause engine RPM reduction of about 100 RPM, causing a sensible available engine power decrease.

5.6. FLAPS CONTROL FAILURE

DURING TAKEOFF

CAUTION

Flap UP take off, requires a T/O distance (50 ft height obstacle distance) increased by about 20%.

1. Airspeed *Keep below 93 KIAS*
2. **Land as soon as practical**

DURING APPROACH/LANDING

CAUTION

If the flaps control fails, consider the higher stall speed (see Section 5, Para 6 (Stall Speed) and an increased landing distance of about 25%.

1. Airspeed *Keep over 75 KIAS*
2. **Land as soon as practical** on a runway of appropriate length

5.7. ELECTRICAL PITCH TRIM CONTROL FAILURE

a) Trim Runaway:
In the event of trim runaway:

1. AP DISC switch (if AP is installed) PRESS and HOLD
2. TRIM DISC switch OFF
3. AP DISC switch (if AP is installed) RELEASE
4. Trim aircraft using trim wheel

b) Trim Jamming:
Should trim control be jammed / inoperative:

1. Pitch trim breaker CHECK

If circuit breaker is OUT:

2. Trim aircraft using trim wheel

If circuit breaker is IN:

2. TRIM DISC switch OFF
3. Trim aircraft using trim wheel

6. ONE ENGINE INOPERATIVE PROCEDURES

CAUTION

The ineffectiveness of one engine results in asymmetric traction which tends to yaw and bank the aircraft towards the inoperative engine. In this condition it is essential to maintain the direction of flight compensating the lower traction and counteracting the yawing effects by mean of rudder pedals. To improve directional control, it is advisable to bank the aircraft of about 5° to the side of the operating engine.

In addition, reduced available overall power and extended control surfaces will lead to a performances drop: a quick pitch attitude reduction will allow to keep a minimum safety airspeed.

The higher is the airspeed the better will be lateral and directional control efficiency: never allow airspeed to drop below V_{MCA}.

CAUTION

Best residual climb performances in OEI (One Engine Inoperative) condition have been recorded in Flap Up configuration and at V_{YSE}, which is marked as a Blue Line on the Airspeed indicator (calculated for maximum Take Off Weight and Sea, Level ISA condition) For actual condition V_{YSE} refer to Section 5 Para. 13 (One engine rate of climb).

V_{XSE} is actually very close to V_{YSE} in any condition, thus best climb performance will also be associated with best climb angle (gradient) performance. Refer to Section 5 Para. 14, One-Engine Rate of Climb at V_{xSE} , for relevant data.

6.1 CHARACTERISTIC AIRSPEEDS WITH ONE ENGINE INOPERATIVE

In case of one engine inoperative condition (OEI), pilot shall take into account the airspeeds shown below:

Conditions	Speed (KIAS)	
Minimum aircraft control speed with one engine inoperative and flaps set to T.O. (V_{MC})	62	
Best rate-of-climb speed OEI (V_{YSE})	MTOW 1180 kg	MTOW 1230 kg
	80	84
Best gradient speed OEI (V_{XSE})	79	83

NOTE

Reference is made to MTOW, 1180 kg and 1230 kg, at Sea Level and ISA condition (if Supplement A19 - Increased MTOW @1230 KG - is applicable).

6.2 INFLIGHT ENGINE RESTART

WARNING

After:

- *mechanical engine seizure;*
- *fire;*
- *major propeller damage*

engine restart is not recommended.

1.	Carburettor heat	*ON if required*
2.	Electrical fuel pump	*ON*
3.	Fuel quantity indicator	*CHECK*
4.	Fuel Selector	*CHECK (Crossfeed if required)*
5.	FIELD	*OFF*
6.	Ignition	*BOTH ON*
7.	Operating engine Throttle Lever	*SET as practical*
8.	**Stopped engine Throttle Lever**	***IDLE***
9.	**Stopped engine Propeller Lever**	***FULL FORWARD***
10.	Start push-button inoperative engine	*PUSH*
11.	Propeller Lever inoperative engine	*SET at desired rpm*
12.	FIELD	*ON (check for positive ammeter)*
13.	Engine throttle levers	*SET as required*

<u>If engine restart is unsuccessful</u>

14.	EMERG BATT switch	ON (if starting battery installed)
15.	Repeat engine restart procedure	

CAUTION

After engine restart, if practical, moderate propeller rpm and throttle increase to allow OIL and CHT/CT temperatures for stabilizing in the green arcs.

NOTE

If the fuel quantity in the tank which feeds the stopped engine is low, select the opposite side fuel tank by means of the fuel selector.

<u>If engine restart is still unsuccessful:</u>

16.	Affected engine	*SECURE (see engine securing procedure Para. 3)*

17. **Land as soon as possible** applying *one engine inoperative landing* procedure. See Para. 6.6

6.3 ENGINE FAILURE DURING TAKEOFF RUN

BEFORE ROTATION: ABORT TAKE OFF

1.	**Throttle Lever**	***BOTH IDLE***
2.	**Rudder**	***Keep heading control***
3.	**Brakes**	***As required***

When safely stopped:

4.	Failed Engine Ignition	BOTH OFF
5.	Failed Engine Field	*OFF*
6.	Failed Engine Electrical fuel pump	*OFF*

IF THE DECISION IS TAKEN TO CONTINUE THE TAKEOFF:

WARNING

A take-off abort should always be preferred if a safe stop can be performed on ground.

A suggested "GO-NO-GO" criteria is: abort take-off until LG is still down and locked.

Once airborne accelerate to Blue Line Speed (V_{YSE}) before commanding LG retraction.

Take-off planning should take into account that high density altitude and aircraft mass may result in OEI negative climb rate.

V_{YSE} with flap up shall be flown in order to achieve best possible rate of climb after landing gear retraction and engine feathering.

1.	**Operating engine Throttle Lever**	***FULL POWER***
2.	**Operating engine Propeller Lever**	***FULL FORWARD***
3.	**Heading**	***Keep control using rudder and ailerons***
4.	**Attitude**	***Reduce as appropriate to keep airspeed over 62 KIAS***
5.	**Inoperative engine Propeller Lever**	***FEATHER***
6.	**Landing gear control lever**	***UP***
7.	**Airspeed**	***V_{XSE}/V_{YSE} as required***
8.	**Flaps**	***0°***

At safe altitude

9.	Inoperative engine	*Confirm and SECURE*
10.	Operative engine Electrical fuel pump	*Check ON*
11.	Operating engine	*Check engine instruments*
12.	Operating engine Fuel Selector	*Check correct feeding (crossfeed if needed)*

If engine restart is recommended:

13. Apply INFLIGHT ENGINE RESTART procedure *see Para 6.2*

If engine restart is unsuccessful or it is not recommended:

13. **Land as soon as possible**
14. One engine inoperative landing procedure. *see Para. 6.6*

WARNING

Following:

- *mechanical engine seizure;*
- *fire;*
- *major propeller damage*

engine restart is not recommended.

6.4 ENGINE FAILURE DURING CLIMB

1.	**Autopilot**	**OFF**
2.	**Heading**	***Keep control using rudder and ailerons***
3.	**Attitude**	***Reduce as appropriate to keep airspeed over 62 KIAS***

4.	Operating engine Throttle Lever	*FULL THROTTLE*
5.	Operating engine Propeller Lever	*FULL FORWARD*
6.	Operative engine Electrical fuel pump	*Check ON*
7.	Inoperative engine Propeller Lever	*FEATHER*
8.	Inoperative engine	Confirm and *SECURE*

If engine restart is possible:

9. Apply INFLIGHT ENGINE RESTART procedure *see Para 6.2*

If engine restart is unsuccessful or it is not recommended:

9. **Land as soon as possible**
10. One engine inoperative landing procedure. *see Para. 6.6*

WARNING

Following a mechanical engine seizure, fire or a major propeller damage engine restart is not recommended.

WARNING

Continuation of flight to a safe landing runway must be planned taking into account maximum operating ceiling in OEI condition. Refer to Section 5 Para 1, "One-engine rate of climb".

6.5. ENGINE FAILURE IN FLIGHT

1.	**Autopilot**	***OFF***
2.	**Heading**	***Keep control using rudder and ailerons***
3.	**Attitude**	***Adjust as appropriate to keep airspeed over 62 KIAS***

4.	Operating engine	*Monitor engine instruments*
5.	Operative engine Electrical fuel pump	*Check ON*
6.	Operating engine Fuel Selector	*Check correct feeding (crossfeed if needed)*

If engine restart is possible:

7. Apply INFLIGHT ENGINE RESTART procedure *see Para 6.2*

If engine restart is unsuccessful or it is not recommended:

7. **Land as soon as possible**
8. One engine inoperative landing procedure. *see Para. 6.6*

WARNING

Following a mechanical engine seizure, fire or a major propeller damage engine restart is not recommended.

WARNING

Continuation of flight to a safe landing runway must be planned taking into account maximum operating ceiling in OEI condition. Refer to Section 5 Para 12 (Rate of climb with One Engine Inoperative).

6.6. One engine inoperative landing

WARNING

Thoroughly evaluate feasibility and plan in advance Single Engine Go-Around capabilities and expected climb gradient should a Missed Approach / balked landing be necessary. Refer to Section 5, Para 13 and 14 (One-engine Rate of Climb at V_{YSE} and V_{XSE})

WARNING

Autopilot must be kept OFF

1.	Seat belts	*Tightly fastened*
2.	Landing lights	*As required*
3.	Operating engine Fuel Selector	*Check correct feeding/crossfeed if needed*
4.	Inoperative engine Propeller Lever	*CHECK FEATHERED*
5.	Inoperative engine	*CHECK SECURED*
6.	Operative engine Electrical fuel pump	*ON*

When on final leg:

7.	Flap	*T/O*
8.	Landing gear	*Select DOWN and check three green lights on*
9.	Approach Airspeed	V_{YSE}
10.	Touchdown speed	*70 KIAS*

INTENTIONALLY LEFT BLANK

7. LANDING GEAR FAILURES

7.1. EMERGENCY LANDING GEAR EXTENSION

NOTE

Landing gear extension failure is identified by means of the green lights not illuminated: relevant gear leg may not be fully extended and/or locked.

Light bulb operating status can be verified by pressing the LDG push-to-test button. Additionally, the red light TRANS indicates that one or more legs are moving and the PUMP ON amber light on the annunciator panel indicates the hydraulic gear pump is operating.

1.	Airspeed	*below* applicable VLO/VLE
2.	Landing gear control lever	*DOWN*
3.	Emergency gear extension access door	*REMOVE*
4.	RH control lever	*ROTATE 90° counterclockwise*
5.	Wait at least 20 seconds	

NOTE

Main Landing Gear legs green lights may be turned on, thus indicating effective main gear legs blocked in down position by mere effect of gravity force.

6.	LH control lever	ROTATE 180° counterclockwise
7.	**Land as soon as practical**	

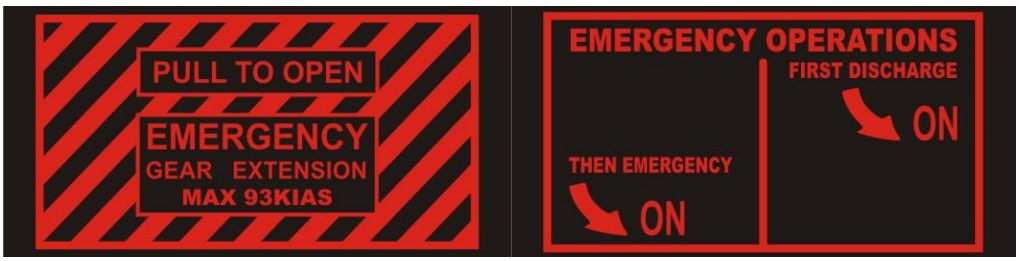

NOTE

The emergency landing gear extension operation takes about 20" sec.

7.2. COMPLETE GEAR UP OR NOSE GEAR UP LANDING

CAUTION

The following procedure applies if Nose Landing Gear is not extended and locked even after emergency extension procedure.

WARNING

A Nose Landing Gear up leg not down and locked might lead to a hazardous situation, especially on uneven runways.

WARNING

If landing gear position is not known, perform a tower fly-by at safe speed and altitude to have confirmation about its situation.

If possible coordinate fire brigade intervention along runway and report number of persons on board and remaining fuel type and quantity.

<u>If a complete Landing Gear up or a Nose Landing Gear up position is reported</u>:

Preparation

1.	Reduce fuel load if time and conditions permit	
2.	Crew and passengers safety belts	*Tightly fastened*
3.	Landing gear control lever	*UP*
4.	Green lights and TRANS light	*CHECK OFF*
5.	Flap setting	*plan approach with Flap Land*

Before ground contact:

6.	LH and RH Fuel Selector	*BOTH OFF*
7.	LH and RH Electrical fuel pump	*BOTH OFF*
8.	Ignitions	*ALL OFF*

On touch down:

9.	Landing attitude	*slight nose-up and wings levelled,*
10.	Touchdown speed	*as low as 50 KIAS with flap*
11.	Aircraft nose	*gently lower as speed bleeds off*

After aircraft stops:

12.	FIELD LH and RH	*BOTH OFF*
13.	MASTER SWITCH	*OFF*

CAUTION

Master switch to OFF impairs radio communication and outside aircraft lighting.

14.	Aircraft Evacuation	*carry out if necessary*

WARNING

Consider use of ditching emergency exit to escape in case pilot or passenger doors are blocked, watch for engine hot parts, fuel, hydraulic fluid or oil spills. Leave aircraft in upwind direction.

7.3. PARTIAL MAIN LG EXTENSION

CAUTION

The following procedure applies if one or both Main Landing Gear legs are not completely extended and locked even after emergency extension procedure.

WARNING

A partial gear landing (RH and/or LH leg not down and locked) might turn into a hazardous situation, especially on uneven runways.

If possible try to obtain a symmetric gear extension (e.g. by trying further landing gear retraction) in order to avoid swerving after touchdown. A gear up landing is generally considered safer.

WARNING

If landing gear position is not known, perform a tower fly-by at safe speed and altitude to have confirmation about its situation.

If possible coordinate fire brigade intervention along runway and report number of persons on board and remaining fuel type and quantity.

Preparation

1.	Reduce fuel load if time and conditions permit	
2.	Crew and passengers safety belts	*Tightly fastened*
3.	Landing gear control lever	*UP*
4.	Green lights and TRANS light	*CHECK OFF*
5.	Flap setting	*plan approach with Flap Land*

<u>If partially extended landing gear is confirmed:</u>

Before ground contact:

6.	LH and RH Fuel Selector	*BOTH OFF*
7.	LH and RH Electrical fuel pump	*BOTH OFF*
8.	Ignitions	*ALL OFF*

On touch down:

9.	Align for approach	*on the runway centreline*
10.	Touchdown speed	*as low as 50 KIAS*
11.	Touchdown	*on the extended gear only*
12.	Heading and direction	*maintain applying appropriate aileron and rudder/steering control*
13.	Retracted leg	*keep off the ground as long as possible*

After aircraft stops:

14. FIELD LH and RH *BOTH OFF*
15. MASTER SWITCH *OFF*

CAUTION

Master switch to OFF impairs radio communication and outside aircraft lighting.

16. Aircraft Evacuation *carry out*

WARNING

Consider use of ditching emergency exit to escape in case pilot or passenger doors are blocked, watch for engine hot parts, fuel, hydraulic fluid or oil spills. Leave aircraft in upwind direction.

7.4. FAILED RETRACTION

1. Airspeed — *Keep below applicable VLO/VLE*
2. Landing gear control lever — *DOWN*

WARNING

A Landing Gear lever recycle (further retraction attempt) may result in a final partial Landing Gear Extension, which may then compromise safe landing aircraft capability.

3. Landing Gear lights — *Check*

If a safe landing configuration is obtained (3 greens)

4. Land normally

If a safe landing gear configuration is not obtained:

4. Emergency LG extension procedure — *Apply (See Para. 7.1)*
5. Land as soon as practical

7.5. UNINTENTIONAL LANDING GEAR EXTENSION

CAUTION

An unwanted landing gear extension, with at least one leg moving downward, may be caused by hydraulic fluid loss and it is signaled by

- *significant aerodynamic noise increase;*
- *light and counteractable nose down pitch moment;*
- *red TRANS light turned on.*

1. Airspeed — *Keep below applicable VLO/VLE*
2. Landing gear control lever — *DOWN*
3. Landing Gear lights — *Check*

If a safe landing configuration is obtained (3 greens)

4. Land normally

If a safe landing gear configuration is not obtained:

4. Emergency LG extension procedure — *Apply (See Para. 7.1)*
5. **Land as soon as practical**

INTENTIONALLY LEFT BLANK

8. SMOKE AND FIRE OCCURRENCE

8.1 ENGINE FIRE ON THE GROUND

1.	**Fuel Selectors**	***BOTH OFF***
2.	**Ignitions**	***ALL OFF***
3.	**Electrical fuel pumps**	***BOTH OFF***
4.	**Cabin heat and defrost**	***OFF***
5.	**MASTER SWITCH**	***OFF***
6.	**Parking Brake**	***ENGAGED***
7.	**Aircraft Evacuation**	**carry out immediately**

WARNING

Consider use of ditching emergency exit to escape in case pilot or passenger doors are blocked, watch for engine hot parts, fuel, hydraulic fluid or oil spills. Leave aircraft in upwind direction.

8.2 ENGINE FIRE DURING TAKEOFF RUN

BEFORE ROTATION: ABORT TAKE OFF

1.	**Throttle Lever**	**BOTH IDLE**
2.	**Rudder**	***Keep heading control***
3.	**Brakes**	***As required***

With aircraft under control

4.	**Fuel Selector**	***BOTH OFF***
5.	**Ignitions**	***ALL OFF***
6.	**Electrical fuel pump**	***BOTH OFF***
7.	**Cabin heat and defrost**	***OFF***
8.	**MASTER SWITCH**	***OFF***
9.	**Parking Brake**	***ENGAGED***
10.	**Aircraft Evacuation**	***carry out immediately***

WARNING

Consider use of ditching emergency exit to escape in case pilot or passenger doors are blocked, watch for engine hot parts, fuel, hydraulic fluid or oil spills. Leave aircraft in upwind direction.

IF THE DECISION IS TAKEN TO CONTINUE THE TAKEOFF:

WARNING

A take-off abort should always be preferred if a safe stop can be performed on ground.

A suggested "GO-NO-GO" criteria is: abort take-off until LG is still down and locked.

Once airborne accelerate to Blue Line Speed (V_{YSE}) before commanding LG retraction.

Take-off planning should take into account that high density altitude and aircraft mass may result in OEI negative climb rate.

V_{YSE} with flap up shall be flown in order to achieve best possible rate of climb after landing gear retraction and engine feathering.

1.	**Operating engine Throttle Lever**	***FULL POWER***
2.	**Operating engine Propeller Lever**	***FULL FORWARD***
3.	**Heading**	***Keep control using rudder and ailerons***
4.	**Attitude**	***Reduce as appropriate to keep airspeed over 62 KIAS***
5.	**Fire affected engine Propeller Lever**	***FEATHER***
6.	**Landing gear control lever**	***UP***
7.	**Airspeed**	***V_{XSE}/V_{YSE} as required***
8.	**Flaps**	***0°***

At safe altitude

9.	Cabin heat and defrost	*BOTH OFF*
10.	Fire affected engine Fuel Selector	*Confirm and OFF*
11.	Fire affected engine Ignitions	*Confirm and BOTH OFF*
12.	Fire affected engine Electrical fuel pump	*Confirm and OFF*
13.	Fire affected engine FIELD	*OFF*

14. **Land as soon as possible** applying *one engine inoperative landing* procedure. See Para. 6.6

8.3 ENGINE FIRE IN FLIGHT

1.	**Cabin heat and defrost**	***BOTH OFF***
2.	**Autopilot**	***OFF***
3.	**Fire affected engine Fuel Selector**	***Confirm and OFF***
4.	**Fire affected engine Ignition**	***Confirm and BOTH OFF***
5.	**Fire affected engine Throttle Lever**	***Confirm and FULL FORWARD***
6.	**Fire affected engine Propeller Lever**	***Confirm and FEATHER***
7.	**Fire affected engine Electrical fuel pump**	***OFF***
8.	**Heading**	***Keep control using rudder and ailerons***
9.	**Attitude**	***Adjust as appropriate to keep airspeed over 62 KIAS***
10.	**Fire affected engine Field**	***OFF***
11.	**Cabin ventilation**	***OPEN***

12. **Land as soon as possible** applying *one engine inoperative landing* procedure. See Para. 6.6

8.4 ELECTRICAL SMOKE IN CABIN ON THE GROUND

1.	**MASTER SWITCH**	***OFF***
2.	**Cabin heat and defrost**	***OFF***
3.	**Throttle Lever**	***BOTH IDLE***
4.	**Ignitions**	***ALL OFF***
5.	**Fuel Selector**	***BOTH OFF***
6.	**Parking Brake**	**ENGAGED**
7.	**Aircraft Evacuation**	**carry out immediately**

WARNING

Consider use of ditching emergency exit to escape in case pilot or passenger doors are blocked, watch for engine hot parts, fuel, hydraulic fluid or oil spills. Leave aircraft in upwind direction.

8.5 ELECTRICAL SMOKE IN CABIN DURING FLIGHT

1. **Cabin ventilation** ***OPEN***
2. **Emergency light** ***ON***
3. **Standby attitude indicator switch** ***ON***
4. **Gain VMC conditions as soon as possible**

In case of cockpit fire:

5. **Fire extinguisher** ***use toward base of flames***

CAUTION

A tripped circuit breaker should not be reset.

If smoke persists, shed electrical supply in order to isolate faulty source by:

6. FIELD LH and RH *BOTH OFF*
7. AVIONICS LH and RH *BOTH OFF*
8. CROSS BUS LH and RH *BOTH OFF*

CAUTION

A fully charged battery can supply electrical power for at least 30 minutes.

If faulty source is found:

9. It may be possible to restore non faulty power sources (one at a time)

If smoke persists:

WARNING

Before total electrical system shutdown consider gaining VMC condition, at night set personal emergency light on.

Only emergency light and emergency ADI will be electrically powered.

All radio COM and NAV, Landing Gear lever (normal mode) and indication lights, electrical trims and flaps will be unserviceable.

9. MASTER SWITCH *OFF*
10. **Land as soon as possible**

When on ground:

11. Aircraft Evacuation *carry out as necessary*

WARNING

Consider use of ditching emergency exit to escape in case pilot or passenger doors are blocked, watch for engine hot parts, fuel, hydraulic fluid or oil spills. Leave aircraft in upwind direction.

9. UNINTENTIONAL SPIN RECOVERY

WARNING

Spin behaviour has not been demonstrated since certification process does not required it for this aircraft category.

Intentional spin is forbidden.

Stall with one engine inoperative is forbidden.

Should an unintentional spin occur, the classic recovery manoeuvre is deemed as being the best action to undertake:

1. **Both engines throttles** ***idle***
2. **Flight Controls** ***centralize***
3. **Rudder** ***fully against rotation until it stops***

INTENTIONALLY LEFT BLANK

10. LANDING EMERGENCIES

10.1 LANDING WITHOUT ENGINE POWER

In case of double engine failure both propellers should be feathered to achieve maximum efficiency. Best glide speed is attained with flap UP and equals V_Y for current aircraft mass and air density altitude. Refer to Section 5, Para. "Enroute Rate of Climb".

CAUTION

Normal landing gear extension requires MASTER switch ON, an efficient battery and takes around 20 seconds.
LG selection should be appropriately anticipated when sure on final.
Flap can be set to T/O or LAND when landing is assured on final to reduce landing ground roll on short field.

Touchdown speed can be as low as 50 kt with flap down.

1. Airspeed

MTOW 1180kg	MTOW 1230 kg
V_Y = 83 KIAS	V_Y = 84 KIAS

2. Flaps — *UP*
3. Emergency landing field — *Select*

WARNING

Emergency landing strip should be chosen considering surface condition, length and obstacles. Wind can be guessed by smoke plumes direction and tree tops or grass bending. Select touchdown direction according to the furrows of a plowed field, not across.

4. Safety belts — *FASTEN and tighten*
5. Flaps — *Set when landing is assured*
6. Landing gear control lever — *DOWN when landing is assured*

CAUTION

To reduce landing gear extension time, evaluate use of emergency control system which requires about 20 sec.

Before touch down

7.	Fuel Selector	*BOTH OFF*
8.	Electrical fuel pump	*BOTH OFF*
9.	Ignitions	*ALL OFF*

After aircraft stops:

10.	MASTER SWITCH	*OFF*

When stopped

11.	Aircraft Evacuation	*carry out if necessary*

WARNING

Consider use of ditching emergency exit to escape in case pilot or passenger doors are blocked, watch for engine hot parts, fuel, hydraulic fluid or oil spills. Leave aircraft in upwind direction.

10.2 LANDING WITH NOSE LANDING GEAR TIRE DEFLATED

WARNING

If possible, as a nose landing gear flat tire condition is known, coordinate fire brigade intervention along runway and report number of persons on board and remaining fuel type and quantity.

If Nose Landing Gear flat tire is confirmed:

Preparation

1.	Crew and passengers safety belts	*Tightly fastened*
2.	If time permits	*Burn fuel to lower landing weight*
3.	Flap setting	*plan approach with Flap Land*

Before ground contact:

4.	Fuel Selector	*BOTH OFF*
5.	Electrical fuel pump	*BOTH OFF*
6.	Ignitions	*ALL OFF*

On touch down:

7.	Landing attitude	*slight nose-up and wings levelled,*
8.	Touchdown speed	*as low as 50 KIAS with flap*
9.	Aircraft nose	*gently lower as speed bleeds off*

After aircraft stops:

10.	FIELD LH and RH	*BOTH OFF*
11.	MASTER SWITCH	*OFF*

CAUTION

Master switch to OFF impairs radio communication and outside aircraft lighting.

12.	Aircraft Evacuation	*carry out if necessary*

WARNING

Consider use of ditching emergency exit to escape in case pilot or passenger doors are blocked, watch for engine hot parts, fuel, hydraulic fluid or oil spills. Leave aircraft in upwind direction.

10.3 LANDING WITH A KNOWN MAIN LANDING GEAR TIRE DEFLATED

WARNING

An asymmetrical landing gear tire condition (RH and/or LH tires deflated) might turn into a hazardous situation, especially on uneven runways.

WARNING

If possible, as a landing gear tires condition is known, coordinate fire brigade intervention along runway and report number of persons on board and remaining fuel type and quantity.

If a main Landing Gear flat tire is confirmed:

Preparation

1.	Crew and passengers safety belts	*Tightly fastened*
2.	Flap setting	*plan approach with Flap Land*
3.	*Approach alignment*	*Plan to land on the side of the good tire (drag in the middle)*

Before ground contact:

4.	LH and RH Electrical fuel pump	*BOTH OFF*
5.	LH and RH Fuel Selector	*BOTH OFF*
6.	Ignitions	*ALL OFF*

On touch down:

7.	Touchdown speed	*as low as 50 KIAS*
8.	Touchdown	*on the good tire gear only*
9.	Heading and direction	*maintain applying appropriate aileron and rudder/steering control*
10.	Flattened tire	*keep off the ground as long as possible*

After aircraft stops (or if runway departure is imminent):

11.	FIELD LH and RH	*BOTH OFF*
12.	MASTER SWITCH	*OFF*

CAUTION

Master switch to OFF impairs radio communication and outside aircraft lighting.

13.	Aircraft Evacuation	*carry out if necessary*

WARNING

Consider use of ditching emergency exit to escape in case pilot or passenger doors are blocked, watch for engine hot parts, fuel, hydraulic fluid or oil spills. Leave aircraft in upwind direction.

10.4 LANDING WITHOUT BRAKES

CAUTION

If possible, select an airport with suitable runway length.

Otherwise, evaluate the possibility to perform a gear up landing (refer to procedure reported on Para. 7.2). In the latter case consider the increasing hazard of an uneven pavement.

1. Safety belts — *FASTEN*

After touch down if runway is deemed insufficient to decelerate:

2. Fuel Selector — *BOTH OFF*
3. Electrical fuel pumps — *BOTH OFF*
4. Ignitions — *ALL OFF*
5. FIELD LH and RH — *BOTH OFF*
6. MASTER SWITCH — *OFF*

CAUTION

Master switch to OFF impairs radio communication and outside aircraft lighting.

Before end of runway or if runway departure is imminent:

7. Landing gear control lever — *UP*

After aircraft stops:

8. Aircraft Evacuation — *carry out if necessary*

WARNING

Consider use of ditching emergency exit to escape in case pilot or passenger doors are blocked, watch for engine hot parts, fuel, hydraulic fluid or oil spills. Leave aircraft in upwind direction.

11. AIRCRAFT EVACUATION

WARNING

Leave the aircraft when engines are fully stopped. Watch for engine hot parts and fuel, hydraulic fluid or oil spills when using fuselage doors. If fuselage doors are unserviceable escape through the ditching emergency exit

In case of engine fire escape from opposite or upwind aircraft side.

Verify (if not yet performed):

1.	**Fuel Selectors**	***BOTH OFF***
2.	**Ignitions**	***ALL OFF***
3.	**Electrical fuel pumps**	***BOTH OFF***
4.	**MASTER SWITCH**	***OFF***
5.	**Parking Brake**	***ENGAGED***
6.	**Leave the aircraft using emergency exits**	

12. DITCHING

WARNING

Contact with water shall happen with aircraft longitudinal axis and direction of motion parallel to the wave at the minimum possible speed. Keep the nose up as long as possible.

Once in the water, the aircraft shall be evacuated through the ditching emergency exit, if available put life vest on and set dinghy out first. Inflate them only outside the aircraft.

If available, try to approach any existing ship in the vicinity in order to be rapidly located and rescued right after ditching.

1.	Landing gear	*UP*
2.	Safety belts	*Tighten and fastened*
3.	Flaps	*FULL*

Before water impact

4.	Fuel Selector	*BOTH OFF*
5.	Electrical fuel pump	*BOTH OFF*
6.	Ignitions	*ALL OFF*
7.	MASTER SWITCH	*OFF*
8.	FIELD LH and RH	*BOTH OFF*
9.	Impact speed	*50 KIAS*

Aircraft evacuation

10.	Emergency exit handle	*rotate clockwise*
11.	Latch door	*push outward*
12.	Life vests	*don*
13.	Evacuate the aircraft	

INTENTIONALLY LEFT BLANK

INTENTIONALLY LEFT BLANK

SECTION 4 – NORMAL PROCEDURES

INDEX

1. Introduction 3
- 1.1. Normal ops general recommendations 3

2. Airspeeds 5
- 2.1. normal operations 5
- 2.2. single engine training 5

3. Normal procedures checklist 7
- 3.1. Recommendations for cold weather operations 7
- 3.2. Pre-flight check - Aircraft walk-around 9
- 3.3. Cockpit inspections 14
- 3.4. Engine starting 16
- 3.5. Before taxiing 18
- 3.6. Taxiing 18
- 3.7. Prior to takeoff 19
- 3.8. Line-up 20
- 3.9. Takeoff and climb 21
- 3.10. Cruise 22
- 3.11. Turbulent air operation 22
- 3.12. Descent and approach 22
- 3.13. Before landing 22
- 3.14. Balked landing/missed approach 23
- 3.15. After landing 24
- 3.16. Parking/shut down 25
- 3.17. Postflight checks 26

4. Ground towing, parking and mooring 27
- 4.1 Towing 27
- 4.2 Parking 27
- 4.3 Mooring 27

INTENTIONALLY LEFT BLANK

1. INTRODUCTION

Section 4 describes checklists and recommended procedures for the conduct of normal operations for ***P2006T*** aircraft.

1.1. NORMAL OPS GENERAL RECOMMENDATIONS

The following points should be always brought to attention to pilot/instructor/operator when operating a Tecnam aircraft equipped with variable pitch propeller:

1. Propeller governor ground check.
As prescribed by the propeller/governor manufacturer, a drop of 400/500 propeller RPM should be produced during this check. Its aim is to confirm the governor efficiency, not its complete feathering function.
Especially during the first cycle of propeller lever pulling, the governor tendency is to respond to the input with consistent delay, causing the pilot to continue moving back the propeller lever until an abrupt RPM change is observed. This causes an excessive drop in propeller speed that may reach up to 800 RPM in some cases and, consequently, a drop of up to 2000 engine shaft RPM. The long term result is a major wear of engine gearbox, bushings and pistons. In some cases, it may also result in detonation.
In order to avoid these long term adverse effects, the governor ground check should be performed by slowly and gently pulling the propeller lever. The purging cycle should be repeated 3 times, making sure that the governor closely and firmly controls the rpm.

The following recommendations have to be followed during the test:

- propeller speed drops shall be of 400/500 propeller RPM
- the cycle shall be repeated 3 times
- the pilot shall be ready to push the propeller lever if a drop of >500 RPM is recorded

2. Power changes.
When power setting changes are required in any flight condition, remember the following correct procedure:

- **Power increase = FIRST Prop THEN Map**
- **Power reduction = FIRST Map THEN Prop**

Useful guideline chart that could be used for best propeller/manifold combination is following reported:

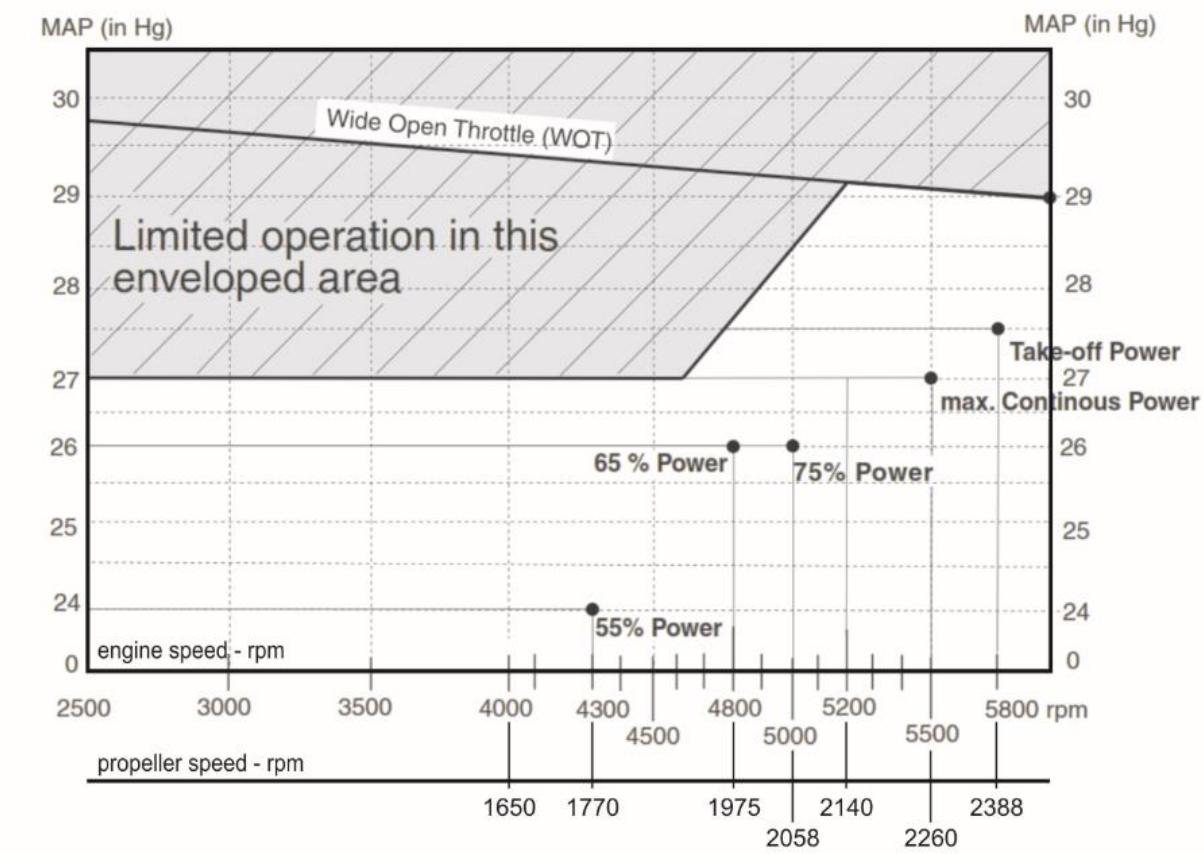

3. Suitable Fuels.

Tecnam remember operators to fill the aircraft with approved and suitable fuels. Use of not approved/unknown fuels may cause damages to the engine.

ONLY USE APPROVED FUELS

For details refer to Section 2 of this manual (or applicable Supplement) and latest issue of Rotax SI-912-016

2. AIRSPEEDS

2.1. NORMAL OPERATIONS

The following airspeeds are those which are significant for normal operations, with reference to both MTOW: 1180 kg and 1230 kg (if Supplement A19 - Increased MTOW @1230 KG - is applicable).

		MTOW	
	FLAPS	**1180kg**	**1230 kg**
Rotation Speed (in takeoff, V_R)	T/O	**64 KIAS**	**65 KIAS**
Best Angle-of-Climb Speed (V_X)	0°	**73 KIAS**	**72 KIAS**
Best Rate-of-Climb speed (V_Y)	0°	**80 KIAS**	**84 KIAS**
Approach speed	T/O	**90 KIAS**	**90 KIAS**
Final Approach Speed	FULL	**70 KIAS**	**71 KIAS**
Manoeuvring speed (V_A)	0°	**118 KIAS**	**122 KIAS**
Never Exceed Speed (V_{NE})	0°	**167 KIAS**	**171 KIAS**

2.2. SINGLE ENGINE TRAINING

V_{SSE} is a speed selected as training aid for pilots in the handling of multi-engine aircraft. It is the minimum speed for intentionally rendering on engine inoperative in flight. This minimum speed provides the margin the manufacturer recommends for us when intentionally performing engine inoperative manoeuvres during training. The best practice to perform single engine training is to retard one engine to the flight parameters equivalent to a dead engine.

A simulated feather condition is obtained with propeller lever full forward and throttle lever set at 13.5 in Hg MAP at 70-90 KIAS and 2000-4000 ft (density altitude).

Recommended safe simulated OEI speed (V_{SSE})	**70 KIAS**

NOTE *Keep speed above V_{SSE} for simulated OEI training operations.*

In normal operations, shutting down an engine for training shall not become a habit, in particular for safety reasons and in order to optimise training; engine shutdown to perform OEI shall be executed only when required by regulations (e.g. during flight check, skill tests or demonstration as per 14CFR Part61 or equivalent rule).

The continuous operation of engine securing for training may indeed cause long term damages to the engine itself due to the high load coming from propeller (which is in feathering angle during the engine re-starting).

Normal procedures checklist

3.1. RECOMMENDATIONS FOR COLD WEATHER OPERATIONS

Engine cold weather operation

Refer to Rotax 912 Series Operators Manual, last issue, providing instructions for operating media (lubricant and coolant specifications) to be used in cold weather operation.

Parking

When the airplane is parked in cold weather conditions and it is expected to be soaked at temperatures below freezing, some precautions need to be taken.
Clear snow, slush, and ice in the parking area, or at least clear the area around the tires to prevent them from freezing to the ground. Apply plugs on Pitot and static ports.

The exposed airframe parts should be protected, especially the engines, the wheels, the blades and the gears against the snow or ice accumulation. Water and other freezable liquids should be removed from the airplane.
Standing water that could freeze should be removed from critical parts, as flaps and ailerons hinges, trim tabs hinges, drain points, LG doors, cabin doors etc.

With an ambient temperature of below -20°C, remove battery and store in a warm dry place; additionally in order to prevent a heavy discharge and to increase the battery life time, it is recommended to use an external power source for engine starting at temperatures lower than –15°C.

When wheel brakes come in contact with ice, slush, or snow with freezing conditions, the brake disk may freeze: park the aircraft with parking brake control knob in OFF position and ensure the aircraft is properly chocked and moored.
In any case, when the probability of ice, snow, or heavy frost is forecast, the use of a hangar is strongly recommended.
An external inspection of the aircraft is performed before each flight, as prescribed on Section 3.1.
For cold weather operations, the crew must focus on the check of following parts of airplane (free of snow/ice/standing water).

- control surfaces
- fuselage
- wings
- vertical and horizontal stabilator
- stall warning switch
- engine inlets
- engines draining points
- propeller blades
- LG doors
- Pitot, and static ports
- fuel tank vents

Tires show low pressure in cold weather: the required adjustments to inflation pressure should be performed on tires cooled to ambient temperature.

If the crew detects ice, anti-icing products are not allowed. To remove ice, tow the aircraft in the hangar and operate with a soft brush or a humid cloth.

WARNING

Removal of snow/ice accumulations is necessary prior to take-off because this will seriously affect airplane performance. Aircraft with ice/snow accumulation is not cleared for flight.

If the aircraft must be operated in cold weather conditions within the range -25ºC to -5ºC**,** it is suggested to perform following procedure in order to speed up the engine warm-up:

- Tow the airplane in a warm hangar (warmer than -5°C);
- Let airplane temperature stabilize;
- Check pressure in hydraulic system, recharge if necessary;
- Heat the cabin to a suitable value to avoid windshield frost in flight; an electrical fan heater may be used inside the cabin;
- Tow airplane outside and perform engine starting.

3.2. PRE-FLIGHT CHECK - AIRCRAFT WALK-AROUND

To perform the aircraft walk-around, carry out the checklists according to the pattern shown in Figure 4-1.

WARNING

If ignition switches are turned ON, a propeller movement can cause the engine starting with consequent hazard for people nearby.

NOTE

Visual inspection is defined as follows: check for defects, cracks, de-lamination, excessive play, unsafe or improper installation as well as for general condition, presence of foreign objects, slippage markers etc. For control surfaces, visual inspection also involves additional check for freedom of movement. Always check the ground in the area of the aircraft for evidence of fuel, oil or operating fluids leakages.

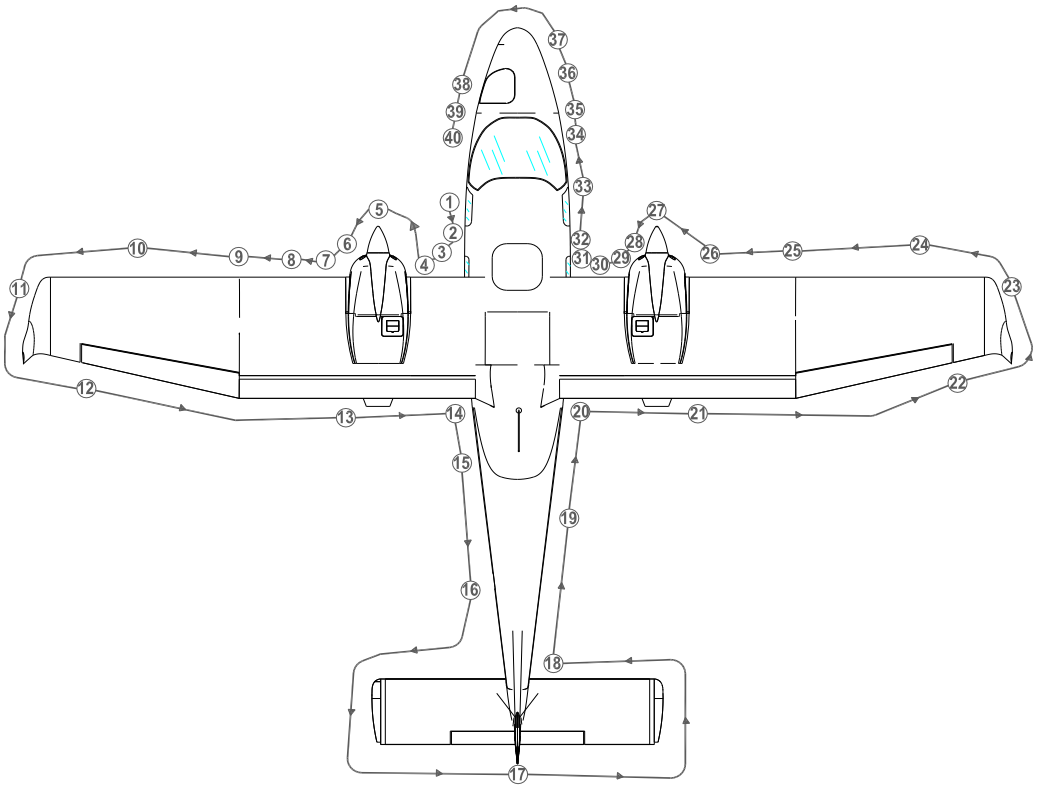

Figure 4.1

1	Pilot door and cabin	*Check door for integrity. Turn ON the Master Switch and check Stall Warning switch for operation and condition; check lighting of Landing/Taxi/Nav/Strobe lights then turn OFF the Master Switch.*
2	Left main landing gear	*Check fuselage skin status, tire status (cuts, bruises, cracks and excessive wear), slippage markers integrity, gear structure and shock absorber, hoses, gear door attachments and gear micro-switches. There should be no sign of hydraulic fluid leakage.*
3	Wheel chock	*Remove if employed*
4	Propeller and spinner	*The propeller blades and spinner should be free of cracks, nicks, dents and other defects and should rotate freely. Check fixing and lack of play between blades and hub.*
5	*Left engine nacelle*	*Perform following inspections:*

a) Check the surface conditions.

b) Nacelle inlets and exhausts openings must be free of obstructions. If inlet and outlet plugs are installed, they should be removed.

c) Check radiators. There should be no indication of leakage of fluid and they have to be free of obstructions.

d) <u>Only before the first flight of a day</u>:

(1) Verify coolant level in the expansion tank, replenish as required up to top (level must be at least 2/3 of the expansion tank).

(2) Verify coolant level in the overflow bottle through the slot under the nacelle: level must be between min. and max. mark. Replenish if required removing the upper cowling; after that, install upper cowling checking for interferences with radiators.

(3) Turn the propeller by hand to and fro, feeling the free rotation of 15°or 30° before the crankshaft starts to rotate. If the propeller can be turned

		between the dogs with practically no friction at all further investigation is necessary. Turn propeller by hand in direction of engine rotation several times and observe engine for odd noises or excessive resistance and normal compression. *e) Check oil level and replenish as required. Prior to oil check, switch off both ignitions circuits and turn the propeller by hand in direction of engine rotation several times to pump oil from the engine into the oil tank. This process is finished when air is returning back to the oil tank and can be noticed by a murmur from the open oil tank. Prior to long flights oil should be added so that the oil level reaches the "max" mark.* *f) Drain off Gascolator for water and sediment (drain until no water comes off). Then make sure drain valve is closed.* *g) Check drainage hoses clamps* *h) Verify all parts are fixed or locked.* *i) Verify all inspection doors are closed.*
6	Air induction system	*Check engine air inlet for integrity and correct fixing. The air intake filter must be free of obstructions.*
7	Left fuel tank	*Check that the refuelling port cap is properly secured, then perform the fuel tank sump drainage operating the related valve which, after operation, must be checked closed. Fuel must checked for water and sediment. Verify the tank vent outlet is clear.*
8	Landing and taxi lights	*Visual inspection*
9	Left wing leading edge	*Visual inspection. Check cabin ventilation inlet and carburettor heating inlet for condition and free of obstruction. Check stall strip.*
10	Left wing top and bottom panels	*Visual inspection*
11	Left winglet, nav and strobe lights, static discharge wick	*Check for integrity and fixing*
12	Left aileron and balance mass	*Visual inspection, remove tie-down devices and control locks if employed.*

13	Left Flap and hinges	*Visual inspection*
14	Left static port	*Remove protective cap – Visual inspection*
15	Antennas	*Check for integrity*
16	Gear pump, external power and battery compartment	*Check emergency landing gear extension system pressure (low pressure limit: 20 bar), external power and battery compartments closure.*
17	Horizontal and vertical empennage and tabs. Static discharge wicks.	*Check the actuating mechanism of control surfaces and the connection with related tabs. Check wicks for integrity. Remove tie-down device if employed.*
18	Stabilator leading edge	*Check for integrity*
19	Fuselage top and bottom skin	*Visual inspection*
20	Right static port	*Remove protective cap – Visual inspection*
21	Right Flap and hinges	*Visual inspection*
22	Right aileron and balance weight	*Visual inspection, remove tie-down devices and control locks if employed.*
23	Right winglet, nav and strobe lights, static discharge wick	*Check for integrity and fixing and lighting*
24	Right wing top and bottom panels	*Visual inspection*
25	Right wing leading edge	*Visual inspection. Check cabin ventilation inlet and carburettor heating inlet for condition and free of obstruction. Check stall strip.*

26	Right fuel tank	*Check that the refuelling port cap is properly secured, then perform the fuel tank sump drainage operating the related valve which, after operation, must be checked closed. Fuel must checked for water and sediment. Verify the tank vent outlet is clear.*
27	Propeller and spinner:	*The propeller blades and spinner should be free of cracks, nicks, dents and other defects and should rotate freely. Check fixing and lack of play between blades and hub.*
28	Right engine nacelle	*Apply check procedure reported in the walk-around station 5 and 6*
29	Passenger door and cabin	*Check door for integrity. Check safety belts for integrity and baggage for correct positioning and fastening. Check ditching emergency exit safety lock. Check passengers ventilation ports for proper setting.*
30	Right main landing gear	*Apply check procedure reported in the walk-around Station 2*
31	Wheel chock	*Remove if employed*
32	Bottom fuselage antennas	*Check for integrity*
33	Right cabin ram-air inlet	*Visual inspection*
34	Right Pitot tube	*Remove protective cap and check for any obstruction*
35	Nose landing gear	*Check tire status (cuts, bruises, cracks and excessive wear), slippage markers integrity, gear structure and retraction mechanism, shock absorber and gear doors attachments. There should be no sign of hydraulic fluid leakage.*
36	Radome	*Check for integrity*
37	Radome access door	*Visual inspection*
38	Left Pitot tube	*Remove protective cap and check for any obstruction*
39	Left cabin ram-air inlet	*Visual inspection*

NOTE

Avoid blowing inside Pitot-tube and inside airspeed indicator system's static ports as this may damage instruments.

3.3. COCKPIT INSPECTIONS

CAUTION

Instruct passengers on how to use safety belts and normal / emergency exits. Passenger embarkation should be done, avoiding contact with hot / oily parts such as engine exhaust pipes, drainage tubes and wheel brakes, or sharp wing control surfaces edges.

Do not smoke on board

1	Parking Brake	*CHECK ENGAGED*
2	AFM	*CHECK on board*
3	Weight and balance	*CHECK if within the limits*
4	Flight controls	*Remove seat belt used as lock*
5	Seat	*Adjust as required*
6	Seat belt	*Fastened*
7	Passenger briefing	*Completed*
8	Doors	*CLOSED AND LOCKED*
9	Landing gear control knob	*CHECK DOWN*
10	Breakers	*All IN*
11	MASTER SWITCH	*ON*
12	Fuel quantity	*CHECK*
13	RH fuel selector	*RIGHT*
14	LH fuel selector	*LEFT*
15	RH Electrical Fuel Pump	*ON, check fuel pressure gauge correct operation and advisory light turned ON.*
16	RH Electrical Fuel pump	*OFF, check pressure decreased at zero*
17	LH Electrical Fuel Pump	*ON, check fuel pressure gauge correct operation and advisory light turned ON.*
18	LH Electrical Fuel pump	*OFF, check pressure decreased at zero*
19	Annunciator panel	*TEST*
20	Landing gear lights	*TEST*
21	ELT	*CHECK set to ARM*
22	Fire detector	*TEST*
23	Electrical pitch trim selector (if installed)	*TEST*
24	Engine levers friction	*Adjust if required*
25	Flight controls	*CHECK free*
26	Alternate static port	*CHECK closed*
27	Cabin heat	*CLOSED*
28	Flaps	*Operate control to FULL position. Verify extension. Retract flaps.*
29	Pitch trim control	*Set to neutral position.*
30	Rudder trim control	*Set to neutral position.*
31	Eng.Starting Battery Voltmeter (optional)	*Check 12 to 14 Volt*

INTENTIONALLY LEFT BLANK

3.4. ENGINE STARTING

CAUTION

Avionics switches must be set OFF during engine starting to prevent avionic equipment damage.

1	Start clearance	*Obtain if needed*
2	CHRONOMETER	*START*

Right engine starting

1	RH Throttle lever	*IDLE*
2	RH Carburetor heat	*OFF*
3	RH Propeller Lever	*FULL FORWARD*
4	RH Choke	*ON if required*

NOTE

Cold engine
Throttles idle (fully closed), chokes fully opened.
Soon after starting, advance the throttle to let the propeller reach 800 RPM and slowly close the choke. Keep engine at 900 RPM for warm up period.

Hot engine
Park the aircraft with the nose pointing into wind in order to aid cooling.
Keep chokes closed and slowly open the throttles one inch while cranking.

Flooded Engine after engine start failure
Keep chokes closed, open throttle fully and start the engine, then quickly reduce throttles to idle.

5	RH Electrical Fuel pump	*ON, check advisory light ON and positive fuel press build up*
6	STROBES	*ON*
7	RH engine propeller zone	*CHECK free*
8	RH ignitions switches	*BOTH ON*

WARNING

Ensure that the area around engine propeller disc is clear from people and obstacles. Call out for propeller free.

9	RH start pushbutton	*PUSH*
10	RH engine oil gauge	*CHECK if increasing within 10 sec. (max 7 bar in cold operation)*
11	RH Throttle lever	*Advance to reach 1200 RPM*
12	RH Choke	*OFF*
13	RH Field	*ON*
14	RH Avionics	*ON*
15	RH Crossbus	*ON*
16	RH Ammeter	*CHECK Amps positive*
17	RH Voltmeter	*CHECK 12 to 14 Volt*
18	RH Electric fuel pump	*OFF*

Left engine starting

1	LH Throttle lever	*IDLE*
2	LH Carburetor heat	*OFF*
3	LH Propeller Lever	*FULL FORWARD*
4	LH Choke	*ON if required*
5	LH Electrical Fuel pump	*ON, check advisory light ON and positive fuel press build up*
6	LH engine propeller zone	*CHECK free*
7	LH ignitions switches	*BOTH ON*

WARNING

Ensure that the area around engine propeller disc is clear from people and obstacles. Call out for propeller free.

8	LH start pushbutton	*PUSH*
9	LH engine oil gauge	*CHECK increasing within 10 sec. (max 7 bar in cold operation)*
10	LH Throttle lever	*Advance to reach 1200 RPM*
11	LH Choke	*OFF*
12	LH Field	*ON*
13	LH Avionics	*ON*
14	LH Crossbus	*ON*
15	LH Ammeter	*CHECK Amps positive*
16	LH Voltmeter	*CHECK 12 to 14 Volt*
17	LH Electric fuel pump	*OFF*

3.5. BEFORE TAXIING

1	Let the engines warm up to a minimum oil temperature of 50°C at 1200 RPM	
2	Nav and taxi lights	*ON*
3	Audio panel	*ON*
4	COM	*ON*
5	NAV	*ON*
6	Transponder	*Standby*
7	Passengers and crews seat belts	*Fastened*
8	Passengers and crews headphones	*Set as required*

3.6. TAXIING

NOTE *Ensure that the main and passengers' doors warning lights are turned off.*

1	LH/RH Fuel Selector	*As required*
2	LH and RH fuel pressure	*Monitor*
3	Parking Brake	*RELEASE*
4	Flight instruments	*CHECK*
5	Engine instruments	*CHECK*
6	Altimeter	*SET both and crosscheck max difference 150 ft*
7	Brakes	*TEST*

3.7. PRIOR TO TAKEOFF

1	Parking Brake	*ENGAGED*
2	RH Fuel Selector	*RIGHT*
3	LH Fuel Selector	*LEFT*
4	LH and RH fuel pressure	*CHECK*
5	LH and RH Engine parameters checks:	

- Oil temperature: 90° - 110°C
  (or 50 - 130 °C, if MOD2006/002 is applied)
- CHT / CT: 50° - 135°C / 50 - 120°*C*
- Oil pressure: *2-5 bar (above 1400 RPM): 0.8 bar (below 1400 RPM)*
- Fuel pressure: *2.2 – 5.8 psi (0.15 - 0.40 bar)*
  **2.2 – 7.26 psi (0.15 – 0.50 bar)*

**applicable for fuel pump part no.893110 and no.893114*

6	LH and RH Generator lights	*CHECK BOTH OFF*
7	LH and RH Propeller Lever	*FULL FORWARD*
8	LH and RH Throttle Lever	*1650 RPM*
9	RH Ignitions switches	Set L / R / BOTH *(RPM drop with single ignition circuit selected must not exceed 130 prop's RPM; maximum RPM difference by use of either LH or RH circuits cannot exceed 50 RPM)*
10	RH Propeller Lever	*GOVERNOR CHECK* *a) Reduce prop speed to 1200 RPM;* *b) move propeller lever back to full forward position;* *c) repeat a) and b) 3 times;* *d) verify that the governor closely and firmly controls the RPM;* *e) verify that 1650 prop RPM are restored with prop lever in full forward position.*

NOTE *Do not cause the propeller speed drop below 1150 RPM in any case.*

11	RH Carburettor heat	*ON, verify propeller RPM decreasing about 100 RPM*
12	RH Carburettor heat	*OFF*
13	RH engine instruments	*CHECK parameters within green arcs*

14	LH Ignitions switches	Set L / R / BOTH *(RPM drop with single ignition circuit selected must not exceed 130 prop's RPM; maximum RPM difference by use of either circuits LEFT or RIGHT cannot overcome 50 RPM)*
15	RH Propeller Lever	*GOVERNOR CHECK* *f) Reduce prop speed to 1200 RPM;* *g) move propeller lever back to full forward position;* *h) repeat a) and b) 3 times;* *i) verify that the governor closely and firmly controls the RPM;* *j) verify that 1650 prop RPM are restored with prop lever in full forward position.*

NOTE *Do not cause the propeller speed drop below 1150 RPM in any case.*

16	LH Carburettor heat	*ON, verify propeller RPM decreasing about 100 RPM*
17	LH Carburettor heat	*OFF*
18	LH engine instruments	*CHECK parameters within green arcs*
19	LH and RH Fuel quantity indicator	*CHECK consistent with fuel plan*
20	Flaps	*T/O or as required (see Section 5, Take OFF performances)*
21	Pitch trim and rudder trim	*SET neutral position*
22	Flight controls	*Check free*
23	Seat belts fastened and doors closed and locked	*CHECK*

3.8. LINE-UP

1	Parking Brake	*RELEASE, check full in*
2	Annunciator panel	*CHECK cautions and warnings OFF*
3	RH Fuel Selector	*RIGHT*
4	LH Fuel Selector	*LEFT*
5	Pitot heat	*as required*
6	Transponder	*SET ALT*
7	Magnetic compass	*CHECK*
8	Heading indicator	*CROSS CHECK*

3.9. TAKEOFF AND CLIMB

1	Landing light	*ON*
2	LH and RH Electrical Fuel pump	*BOTH ON*
3	Carburettors heat	*CHECK OFF*
4	LH and RH Propeller Lever	*FULL FORWARD*
5	LH and RH Throttle Lever	*FULL POWER*
6	Engines instruments	*Parameters within green arcs*
7	Rotation speed	
8	Apply brakes to stop wheel spinning	
9	Landing gear control knob	*UP: check green lights and TRANS light turned OFF within about 20"*
10	Landing and taxi light	*OFF when required*
11	LH and RH Propeller Lever	*Set max cont power at* safe altitude

MTOW 1180kg	MTOW 1230 kg
Vr = 64 KIAS	*Vr = 65 KIAS*

CAUTION

Max take off power must be limited to 5 minutes. Reduce Throttles MAP power before retracting Propeller to 2200 RPM or below.

12	LH and RH Electrical Fuel pump	*BOTH OFF*

NOTE

It is recommended to retract landing gear when a positive climb rate is ensured at the applicable best speed (V_Y or V_X as necessary).
It has been demonstrated that best climb rate is always obtained with flaps in UP position: refer to Section 5, "Take off rate of climb" and "Enroute rate of climb" tables.
Noteworthily best climb gradient speed (V_X) flaps UP is lower than best climb speed (V_X) flaps T/O up to 6000 ft (density altitude).
Refer to Section 5, "Best climb gradient speed" table.

3.10. CRUISE

1 LH and RH Propeller Lever *SET to 1900-2250 RPM*

CAUTION

Throttles MAP decrease should be made before propeller speed reduction below 2200 RPM, as, contrariwise, Propeller Lever increase RPM should be set before engine Throttle Levers are advanced.

2 Engine parameters check (LH and RH)

- Oil temperature: *90° - 110 ° C*
  (or 50° - 130° C, if MOD2006/002 is applied)
- CHT / CT: *50° - 135° / 50° - 120 °C*
- Oil pressure: *2 - 5 bar.*
- Fuel pressure: *2.2 – 5.8 psi *2.2 – 7.26 psi (0.15 – 0.50 bar)*
  **applicable for fuel pump part no.893110 and no.893114*

3 Carburettor heat as needed *(see also instructions addressed on Section 3*

WARNING

Deselect and do not use Auto Pilot if possible icing condition area is inadvertently entered.

4 Fuel balance and crossfeed *check as necessary*

NOTE

To evaporate possibly accumulated condensation water, once per flight day (for approximately 5 minutes) 100° C (212° F) oil temperature must be reached.

3.11. TURBULENT AIR OPERATION

In keeping with good operating practice used in all aircraft, it is recommended that when turbulent air is encountered or expected, the airspeed be reduced to maneuvering speed to reduce the structural loads caused by gusts and to allow for inadvertent speed build-ups, which may occur as a result of the turbulence or of distractions caused by the conditions.

3.12. DESCENT AND APPROACH

1 Propellers *As required*

NOTE

In order to control engine cooling and life, it is preferable to descend with power above idle and RPM lower than full continuous.

2 Carburettors heat *As required*
3 Altimeter setting *QNH set and crosscheck*
4 Rear passengers seats *Set at full aft position*

3.13. BEFORE LANDING

1	LH and RH Electrical Fuel pump	*BOTH ON*
2	On downwind leg:	
3		*Flaps T/O*
	Speed below applicable VLO/VLE	*Landing gear control knob - DOWN – Check green lights ON*
4	Carburettors heat	*CHECK OFF*
5	LH and RH Propeller Lever	*FULL FORWARD*
6	On final leg: speed below 93 KIAS	*Flaps FULL*
7	Final Approach Speed	
8		
	Landing and taxi light	*ON*
9	Touchdown speed	*65 KIAS*

MTOW 1180kg	MTOW 1230 kg
V_{FE}= 119KIAS	V_{FE}=122KIAS

MTOW 1180kg	MTOW 1230 kg
V_{APP}= 70KIAS	V_{APP}=71KIAS

3.14. BALKED LANDING/MISSED APPROACH

1	LH and RH Propeller Lever	*FULL FORWARD*
2	LH and RH Throttle Lever	*FULL POWER*

CAUTION

Propeller Lever increase to max RPM should be attained before engine Throttle Levers are advanced to max take off power. Max take off power must be limited to 5 minutes.

3	Flaps	*T/O*
4	Speed	*AS REQUIRED (see Note)*
5	Landing gear	*UP as positive climb is achieved*
6	Flaps	*UP*

NOTE

It is recommended to retract landing gear when a positive climb rate is ensured at the applicable best speed (V_Y or V_X as necessary).
It has been demonstrated that best climb rate is always obtained with flaps in UP position: refer to Section 5, "Take off rate of climb" and "Enroute rate of climb" tables.
Noteworthily best climb gradient speed (V_X) flaps UP is lower than best climb speed (V_X) flaps T/O up to 6000 ft (density altitude).Refer to Section 5, "Best climb gradient speed" table.

3.15. AFTER LANDING

1	LH and RH Electrical Fuel pump	*BOTH OFF*
2	Flaps	*0°*
3	Pitot Heat	*OFF*
4	Landing light	*OFF when required*

3.16. PARKING/SHUT DOWN

NOTE *It is always suggested to park the aircraft with the nose pointing into wind to improve cooling after shut down.*

1	Parking brake	*Engage*
2	Taxi light	*OFF*
3	Engines	*Allow for cooling down 1 minute at idle power*
4	Flaps	*Check UP*
5	Trims	*Check neutral*

NOTE *Ensure the engine is at its lowest possible idle speed before selecting ignitions off.*

6	Ignition switches	*Turn OFF one at a time*
7	LH and RH AVIONIC BUS	*OFF*
8	LH and RH CROSS BUS	*OFF*
9	LH/RH Field	*OFF*
10	All external lights switches	*OFF*
11	Master Switch	*OFF*
12	Emg Batt / Emg cockpit light / Emg ADI switches	*Check OFF*

WARNING *Before disembarkation verify propellers are fully stopped.*

CAUTION *Instruct passengers to fully open pax door (against nacelle stop) and depart alongside aircraft fuselage, avoiding contact with hot / oily parts such as engine exhaust pipes, drainage tubes and wheel brakes, or sharp wing control surfaces edges.*

CAUTION *Crew should avoid propeller disc area crossing while proceeding alongside a fully opened pilot's door (up to 110°).*

3.17. POSTFLIGHT CHECKS

1	Protective cover for Pitot tubes, stall warning and static port plugs.	*Install*
2	Lock one control wheel with safety belt.	
3	Wheel chocks	*Place under MLG*
4	Aileron lock	*Place and tighten*
5	Pilot and passengers doors.	*Close and latch*

3. GROUND TOWING, PARKING AND MOORING

4.1 TOWING

CAUTION

When the a/c is moved on the ground, the Master Switch must be turned ON until the a/c is parked.

To tow the aircraft it is necessary to use a metal stiff bar connected to the nose gear.

WARNING

Do not turn nose wheel above 20° either side of center: greater steering angles can damage the wheel stop. The tow bar must be removed before engines starting.

4.2 PARKING

General

Under normal weather conditions, the airplane may be parked and headed in a direction that will facilitate servicing without regard to prevailing winds. Ensure that it is sufficiently protected against adverse weather conditions and present no danger to other aircraft.

Procedure

1. Position airplane on levelled surface, headed into the prevailing wind, if practical.
2. Engage parking brake and install control locks
3. Secure pilot control wheel by wrapping the seat belt around it.

NOTE:

Do not engage the parking brakes at low ambient temperature; accumulation of moisture may cause the brakes to freeze. In this case use wheel chocks.

In case of long time parking or overnight parking, it is recommended to moor the a/c as shown on Para. 4.3.

CAUTION

Mooring is strongly recommended when the wind is more than 15 knots and the a/c is completely refuelled.

4.3 MOORING

The aircraft is moored to insure its immovability, protection, and security under various weather conditions.

CAUTION

Mooring is strongly recommended when the wind is more than 15 knots and the a/c is completely refuelled.

Procedure

1. Position airplane on levelled surface and headed into the prevailing wind.
2. Center nose wheel, engage parking brake and/or use the wheel chocks.

NOTE: *Do not engage the parking brakes at low ambient temperature; accumulation of moisture may cause the brakes to freeze. In this case use wheel chocks.*

3. Secure pilot control wheel by wrapping the seat belt around it
4. Assure flaps are retracted
5. Electrically ground airplane, by connecting ground cable to the engine muffle
6. Install control locks and protective plugs.
7. Close and lock cabin doors.
8. Secure tie-down cables to the nose gear leg (in correspondence of the wheel fork) and to the wings and tail cone tie-down rings at approximately 45 degree with respect to the ground. (Refer to following figures)

NOTE: *Additional preparation for high winds includes tie-down ropes from the main landing gear forks employment.*

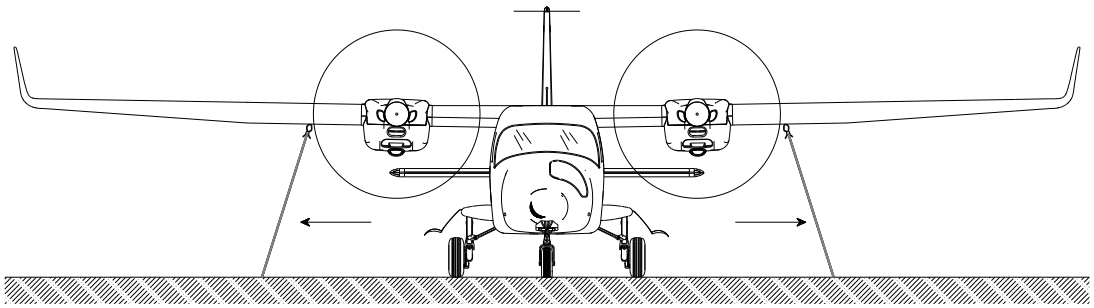

Mooring – front view

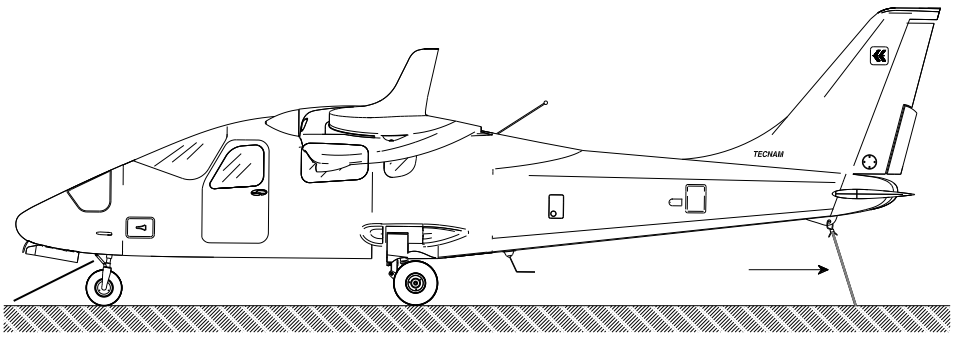

Mooring – side view

INTENTIONALLY LEFT BLANK

INTENTIONALLY LEFT BLANK

SECTION 5 - PERFORMANCES

INDEX

1. Introduction 2
2. Use of performances charts 2
3. Airspeed indicator system calibration 3
4. ICAO Standard Atmosphere 4
5. Examples: 4
6. Stall speed 5
7. Crosswind 6
8. Take-off performances 7
9. Take-off Rate of Climb 10
10. Take-off Rate of Climb at V_x 11
11. Enroute Rate of Climb 12
12. Enroute Rate of Climb at V_x 13
13. One-Engine Rate of Climb 14
14. One-Engine Rate of Climb at V_{xSE} 15
15. Cruise performances 16
16. Landing performances 19
17. Balked landing climb gradient 22
18. Noise data 22

1. INTRODUCTION

This section provides all necessary data for an accurate and comprehensive planning of flight activity from takeoff to landing.

Data reported in graphs and/or in tables were determined using:

- "Flight Test Data" under conditions prescribed by EASA CS-23 regulation
- aircraft and engine in good condition
- average piloting techniques

Each graph or table was determined according to ICAO Standard Atmosphere (ISA - s.l.); evaluations of the impact on performances were carried out by theoretical means for:

*airspeed
*external temperature
*altitude
*weight
*runway type and condition

2. USE OF PERFORMANCES CHARTS

Performances data are presented in tabular or graphical form to illustrate the effect of different variables such as altitude, temperature and weight. Given information is sufficient to plan the mission with required precision and safety.

Additional information is provided for each table or graph.

3. AIRSPEED INDICATOR SYSTEM CALIBRATION

Graph shows calibrated airspeed V_{CAS} as a function of indicated airspeed V_{IAS}.

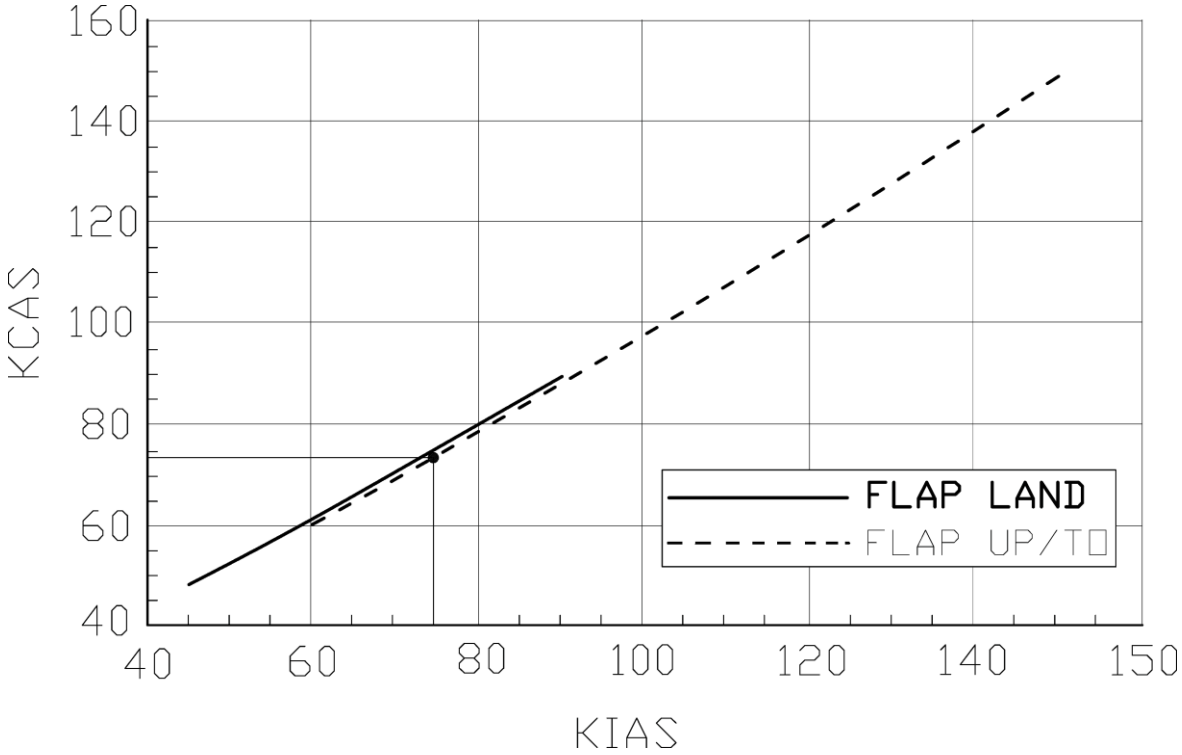

Figure 1 - IAS/CAS chart

Example:

Given	***Find***
KIAS *75*	KCAS *74*

4. ICAO STANDARD ATMOSPHERE

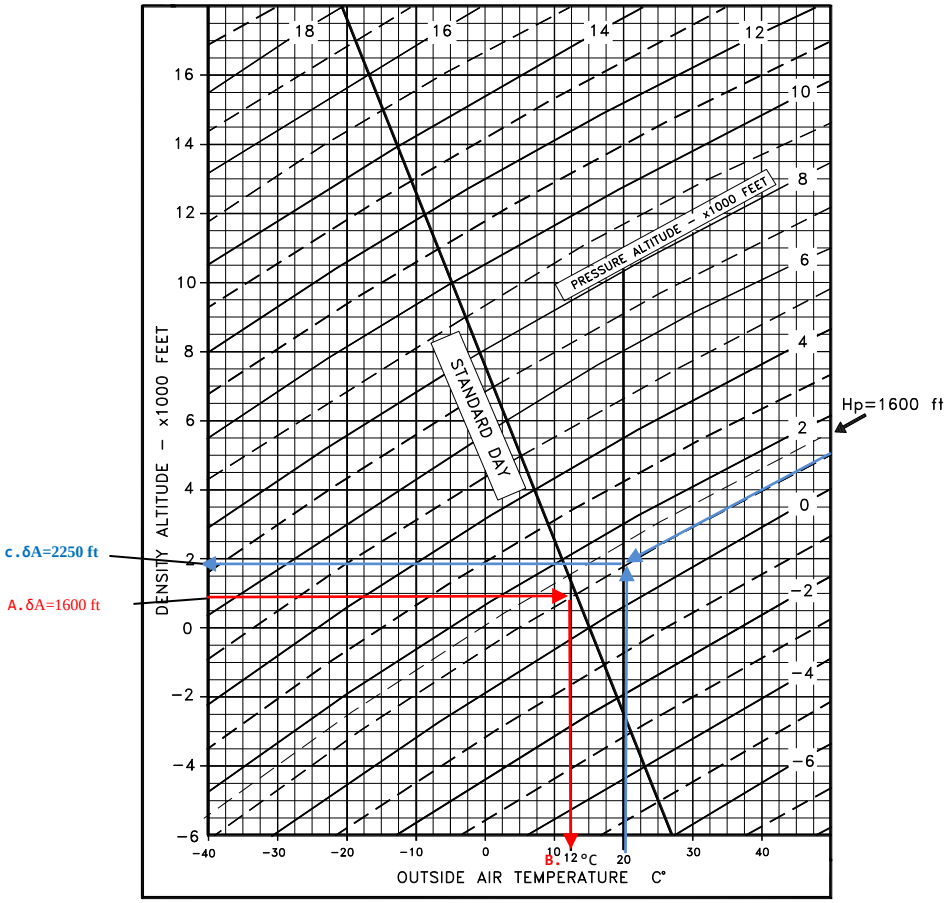

Figure 2 – ICAO chart

5. EXAMPLES:

Given

a. Temperature = 20°C

b. Pressure altitude = 1600'

Find

c. Corresponding Density Altitude = 2250'

Given

A. Pressure altitude = 1600'

ISA condition

Find

B. ISA Air Temperature = 12°C

6. STALL SPEED

Weight: *1180 kg*
Throttle Levers: *IDLE*
Landing Gear: *Down*
CG: *Most Forward (16.5%)*
No ground effect

WEIGHT	BANK ANGLE	STALL SPEED					
		FLAPS 0°		FLAPS T/O		FLAPS FULL	
[kg]	*[deg]*	KIAS	KCAS	KIAS	KCAS	KIAS	KCAS
1230 *(FWD C.G.)*	0	66	64	56	56	53	54
	15	67	65	57	57	54	55
	30	70	69	60	60	58	58
	45	77	76	67	67	64	64
	60	93	90	81	79	78	76

NOTE

Altitude loss during conventional stall recovery, as demonstrated during flight tests is approximately 200 ft with banking below 30°.

7. CROSSWIND

Maximum demonstrated crosswind is 17 Kts

⇒ *Example:*

Given	***Find***
Wind direction (*with respect to aircraft longitudinal axis*) = 30°	Headwind = 17.5 Kts
Wind speed = 20 Kts	Crosswind = 10 Kts

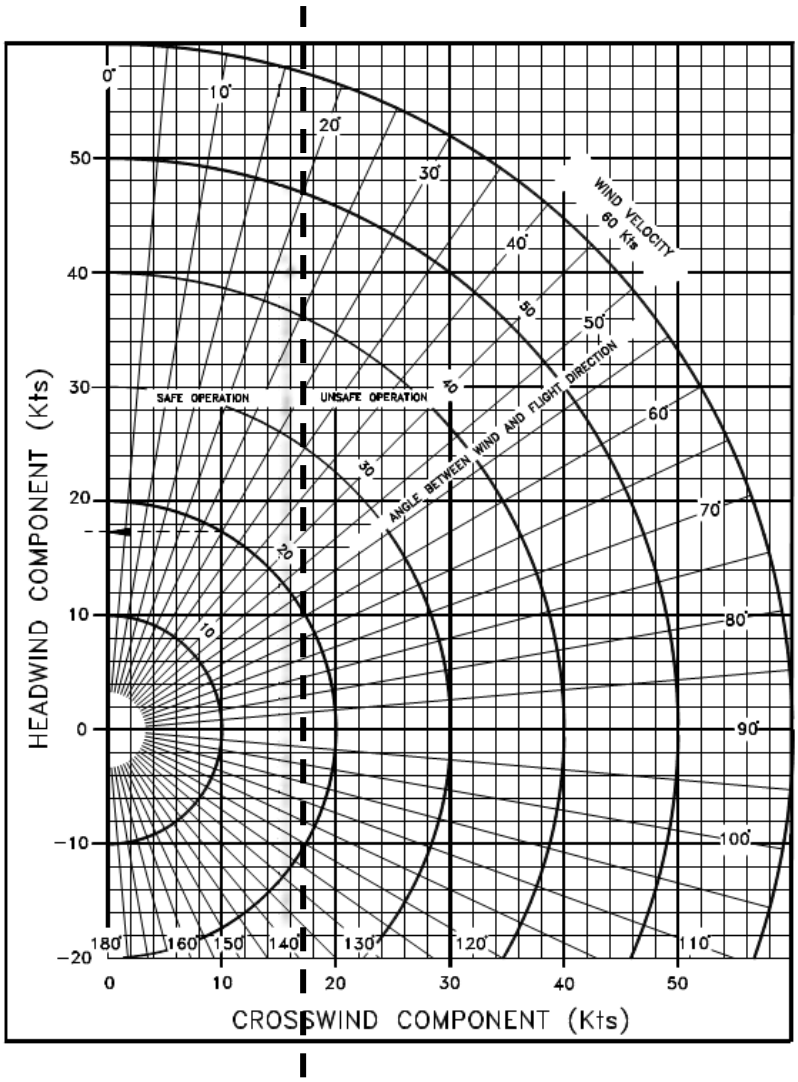

Figure 3 – Crosswind diagram

8. TAKE-OFF PERFORMANCES

Weight = *1180 kg*

Flaps: *T/O*
Speed at Lift-Off = *65 KIAS*
Speed Over *50ft* Obstacle = *70 KIAS*
Throttle Levers: *Full Forward*
Runway: *Grass*

Corrections

Headwind: - 2.5m for each kt (*8 ft/kt*)
Tailwind: + 10m for each kt (*33ft/kt*)
Paved Runway: - *6%* to Ground Roll
Runway slope: + 5% to Ground Roll for each +1%

Pressure Altitude [ft]		Distance [m]				
		Temperature [°C]				ISA
		-25	0	25	50	
S.L.	Ground Roll	208	258	313	374	**290**
	At 50 ft AGL	266	331	404	485	**373**
1000	Ground Roll	230	284	346	413	**315**
	At 50 ft AGL	294	366	447	537	**407**
2000	Ground Roll	254	315	382	457	**343**
	At 50 ft AGL	326	406	495	595	**444**
3000	Ground Roll	281	348	423	505	**374**
	At 50 ft AGL	401	499	610	733	**529**
4000	Ground Roll	311	385	468	560	**408**
	At 50 ft AGL	401	499	610	733	**529**
5000	Ground Roll	345	427	519	620	**445**
	At 50 ft AGL	445	555	677	814	**579**
6000	Ground Roll	383	474	575	688	**486**
	At 50 ft AGL	495	617	753	906	**633**
7000	Ground Roll	425	526	639	764	**531**
	At 50 ft AGL	551	686	839	1008	**693**
8000	Ground Roll	472	585	710	849	**581**
	At 50 ft AGL	614	765	934	1123	**759**
9000	Ground Roll	525	650	790	945	**635**
	At 50 ft AGL	685	853	1042	1253	**833**
10000	Ground Roll	585	724	879	1052	**696**
	At 50 ft AGL	764	952	1163	1399	**914**

Weight = *1080 kg*

Flaps: *T/O*
Speed at Lift-Off = *65 KIAS*
Speed Over *50ft* Obstacle = 70 *KIAS*
Throttle Levers: *Full Forward*
Runway: *Grass*

Corrections

Headwind: - 2.5m for each kt (*8 ft/kt*)
Tailwind: + 10m for each kt (*33ft/kt*)
Paved Runway: - *6%* to Ground Roll
Runway slope: + 5% to Ground Roll for each +1%

Pressure Altitude [ft]		Distance [m]				
		Temperature [°C]				ISA
		-25	0	25	50	
S.L.	Ground Roll	148	188	234	286	**215**
	At 50 ft AGL	193	246	306	374	**281**
1000	Ground Roll	165	210	261	319	**235**
	At 50 ft AGL	216	274	341	418	**308**
2000	Ground Roll	184	234	291	356	**258**
	At 50 ft AGL	241	306	381	466	**338**
3000	Ground Roll	206	262	326	398	**284**
	At 50 ft AGL	301	383	477	583	**409**
4000	Ground Roll	230	293	364	446	**312**
	At 50 ft AGL	301	383	477	583	**409**
5000	Ground Roll	258	328	408	499	**343**
	At 50 ft AGL	338	429	534	653	**449**
6000	Ground Roll	289	368	457	559	**378**
	At 50 ft AGL	378	481	599	732	**495**
7000	Ground Roll	324	412	513	628	**417**
	At 50 ft AGL	425	540	672	822	**545**
8000	Ground Roll	364	463	577	705	**460**
	At 50 ft AGL	477	606	755	923	**602**
9000	Ground Roll	410	521	648	793	**508**
	At 50 ft AGL	536	682	849	1038	**664**
10000	Ground Roll	461	586	730	893	**561**
	At 50 ft AGL	604	767	955	1168	**734**

Weight = *930 kg*

Flaps: *T/O*
Speed at Lift-Off = *65 KIAS*
Speed Over *50ft* Obstacle = *70 KIAS*
Throttle Levers: *Full Forward*
Runway: *Grass*

Corrections

Headwind: - 2.5m for each kt (*8 ft/kt*)
Tailwind: + 10m for each kt (*33ft/kt*)
Paved Runway: - *6%* to Ground Roll
Runway slope: + 5% to Ground Roll for each +1%

Pressure Altitude [ft]		Distance [m]				
		Temperature [°C]				ISA
		-25	0	25	50	
S.L.	Ground Roll	100	127	158	194	**146**
	At 50 ft AGL	131	167	207	254	**190**
1000	Ground Roll	112	142	177	216	**160**
	At 50 ft AGL	146	186	231	283	**209**
2000	Ground Roll	125	159	197	242	**175**
	At 50 ft AGL	163	208	258	316	**229**
3000	Ground Roll	140	177	221	270	**192**
	At 50 ft AGL	204	260	323	395	**277**
4000	Ground Roll	156	198	247	302	**212**
	At 50 ft AGL	204	260	323	395	**277**
5000	Ground Roll	175	222	277	338	**233**
	At 50 ft AGL	229	291	362	443	**305**
6000	Ground Roll	196	249	310	379	**256**
	At 50 ft AGL	257	326	406	496	**335**
7000	Ground Roll	220	280	348	426	**282**
	At 50 ft AGL	288	366	455	557	**370**
8000	Ground Roll	247	314	391	478	**312**
	At 50 ft AGL	323	411	512	626	**408**
9000	Ground Roll	278	353	440	538	**344**
	At 50 ft AGL	364	462	575	704	**450**
10000	Ground Roll	313	397	495	605	**380**
	At 50 ft AGL	409	520	648	792	**498**

9. TAKE-OFF RATE OF CLIMB

Power Setting: Maximum Continuous Power
Flaps: Take-Off
Landing Gear: Up

Weight [kg]	Pressure Altitude [ft]	Climb Speed V_y [KIAS]	Rate of Climb [ft/min] Temperature [°C] -25	0	25	50	ISA
1180	**S.L.**	**85**	1347	1154	982	826	**1048**
	2000	**82**	1200	1010	841	688	**933**
	4000	**79**	1054	867	701	551	**818**
	6000	**76**	908	725	561	413	**704**
	8000	**73**	763	583	422	277	**589**
	10000	**70**	618	441	283	141	**474**
	12000	**67**	473	300	145	5	**359**
	14000	**64**	330	159	7	-130	**244**
1080	**S.L.**	**85**	1507	1302	1119	954	**1190**
	2000	**82**	1351	1150	970	808	**1068**
	4000	**79**	1196	998	822	662	**946**
	6000	**76**	1041	847	674	517	**825**
	8000	**73**	887	696	526	372	**703**
	10000	**69**	734	546	379	228	**581**
	12000	**66**	581	397	232	84	**459**
	14000	**63**	428	248	86	-59	**338**
930	**S.L.**	**85**	1803	1575	1372	1189	**1451**
	2000	**82**	1630	1406	1206	1026	**1315**
	4000	**79**	1457	1238	1041	864	**1180**
	6000	**75**	1286	1070	877	703	**1045**
	8000	**72**	1114	902	713	542	**909**
	10000	**69**	944	735	549	382	**774**
	12000	**65**	774	569	387	222	**639**
	14000	**62**	604	404	224	63	**503**

10. TAKE-OFF RATE OF CLIMB AT V_x

Power Setting: Maximum Continuous Power
Flaps: Take-Off
Landing Gear: Up

Weight [kg]	Pressure Altitude [ft]	Climb Speed V_x [KIAS]	Rate of Climb at V_x [ft/min] Temperature [°C] -25	0	25	50	ISA
1180	**S.L.**	**78**	1283	1102	940	794	**1002**
	1000	**76**	1214	1034	874	729	**949**
	2000	**75**	1145	967	808	664	**895**
	3000	**74**	1076	900	742	600	**841**
	4000	**73**	1008	833	676	535	**787**
	5000	**72**	939	766	611	471	**733**
	6000	**71**	871	699	545	407	**679**
	7000	**70**	803	632	480	342	**625**
1080	**S.L.**	**78**	1283	1102	940	794	**1002**
	1000	**76**	1214	1034	874	729	**949**
	2000	**75**	1145	967	808	664	**895**
	3000	**74**	1076	900	742	600	**841**
	4000	**73**	1008	833	676	535	**787**
	5000	**72**	939	766	611	471	**733**
	6000	**71**	871	699	545	407	**679**
	7000	**70**	803	632	480	342	**625**
930	**S.L.**	**78**	1435	1243	1072	918	**1138**
	1000	**76**	1362	1172	1002	849	**1081**
	2000	**75**	1289	1101	932	780	**1024**
	3000	**74**	1216	1030	863	712	**967**
	4000	**73**	1144	958	793	644	**910**
	5000	**72**	1071	888	724	576	**853**
	6000	**71**	999	817	654	508	**796**
	7000	**69**	927	746	585	440	**739**

11. ENROUTE RATE OF CLIMB

Power Setting: Maximum Continuous Power
Flaps: Up
Landing Gear: Up

Weight [kg]	Pressure Altitude [ft]	Climb Speed V_y [KIAS]	Rate of Climb [ft/min] Temperature [°C] -25	0	25	50	ISA
1180	**S.L.**	**84**	1392	1205	1038	887	**1102**
	2000	**83**	1249	1066	901	753	**991**
	4000	**81**	1108	927	766	620	**880**
	6000	**79**	966	789	630	487	**768**
	8000	**77**	826	651	495	355	**657**
	10000	**75**	685	514	361	223	**546**
	12000	**73**	545	377	227	92	**434**
	14000	**71**	406	241	93	-39	**323**
1080	**S.L.**	**83**	1560	1360	1182	1022	**1251**
	2000	**82**	1408	1212	1037	879	**1132**
	4000	**80**	1257	1064	892	737	**1014**
	6000	**78**	1106	917	748	595	**895**
	8000	**76**	956	770	604	454	**776**
	10000	**74**	807	624	461	314	**658**
	12000	**72**	657	478	318	173	**539**
	14000	**70**	509	333	175	34	**420**
930	**S.L.**	**82**	1873	1649	1449	1269	**1527**
	2000	**81**	1703	1483	1286	1109	**1393**
	4000	**79**	1533	1317	1124	950	**1260**
	6000	**77**	1364	1151	962	791	**1127**
	8000	**75**	1196	987	800	632	**994**
	10000	**73**	1028	823	639	474	**861**
	12000	**71**	860	659	479	317	**727**
	14000	**69**	693	496	319	160	**594**

12. ENROUTE RATE OF CLIMB AT V_x

Power Setting: Maximum Continuous Power
Flaps: Up
Landing Gear: Up

Weight [kg]	Pressure Altitude [ft]	Climb Speed V_x [KIAS]	Rate of Climb at V_x [ft/min] Temperature [°C] -25	0	25	50	ISA
1180	**S.L.**	**72**	1315	1142	987	848	**1047**
	1000	**72**	1249	1077	924	786	**996**
	2000	**72**	1183	1013	861	724	**944**
	3000	**72**	1118	949	799	663	**893**
	4000	**72**	1052	885	736	601	**841**
	5000	**71**	987	821	673	540	**790**
	6000	**71**	922	757	611	479	**738**
	7000	**71**	856	694	548	417	**687**
1080	**S.L.**	**72**	1480	1295	1130	981	**1194**
	1000	**72**	1410	1226	1062	915	**1139**
	2000	**72**	1340	1158	995	848	**1084**
	3000	**72**	1269	1089	928	782	**1029**
	4000	**71**	1199	1020	861	717	**973**
	5000	**71**	1129	952	794	651	**918**
	6000	**71**	1059	884	727	585	**863**
	7000	**71**	990	815	660	520	**808**
930	**S.L.**	**72**	1787	1578	1391	1223	**1463**
	1000	**72**	1707	1500	1315	1148	**1401**
	2000	**71**	1628	1422	1239	1074	**1339**
	3000	**71**	1549	1345	1163	999	**1277**
	4000	**71**	1470	1268	1087	925	**1215**
	5000	**71**	1391	1190	1012	851	**1153**
	6000	**71**	1312	1113	936	777	**1090**
	7000	**70**	1233	1036	861	703	**1028**

13. ONE-ENGINE RATE OF CLIMB

Power Setting: Maximum Continuous Power (operative engine), propeller feathered (inoperative engine)
Flaps: Up
Landing Gear: Up

Weight [kg]	Pressure Altitude [ft]	Climb Speed V_{ySE} [KIAS]	Rate of Climb [ft/min] Temperature [°C] -25	0	25	50	ISA
1180	S.L.	80	362	261	171	89	206
	1000	80	324	224	134	53	176
	2000	80	285	186	97	17	146
	3000	79	247	148	60	-19	116
	4000	79	209	111	24	-55	85
	5000	79	171	74	-13	-91	55
	6000	79	132	36	-49	-127	25
	7000	78	94	-1	-86	-163	-5
1080	S.L.	80	436	330	235	149	271
	1000	80	396	290	196	111	240
	2000	79	355	251	157	73	208
	3000	79	315	211	118	35	176
	4000	79	275	172	80	-3	145
	5000	79	234	132	41	-41	113
	6000	78	194	93	3	-78	81
	7000	78	154	54	-35	-116	50
930	S.L.	79	574	455	349	253	390
	1000	79	529	411	305	211	355
	2000	79	483	367	262	168	319
	3000	78	438	322	219	126	284
	4000	78	393	278	176	83	248
	5000	78	348	235	133	41	213
	6000	78	304	191	90	-1	178
	7000	77	259	147	47	-43	142

14. One-Engine Rate of Climb at V_{xSE}

Power Setting: Maximum Continuous Power (operative engine), propeller feathered (inoperative engine)
Flaps: Up
Landing Gear: Up

Weight [kg]	Pressure Altitude [ft]	Climb Speed V_{xSE} [KIAS]	Rate of Climb at V_{xSE} [ft/min] Temperature [°C] -25	0	25	50	ISA
1180	**S.L.**	**79**	356	257	168	88	**203**
	1000	**79**	319	220	132	53	**173**
	2000	**79**	281	183	96	17	**144**
	3000	**79**	243	146	60	-18	**114**
	4000	**78**	206	110	24	-53	**84**
	5000	**78**	168	73	-12	-89	**55**
	6000	**78**	131	36	-48	-124	**25**
	7000	**78**	93	0	-84	-159	**-4**
1080	**S.L.**	**79**	424	321	229	147	**265**
	1000	**79**	385	283	192	110	**234**
	2000	**79**	346	245	155	73	**204**
	3000	**79**	307	207	117	37	**173**
	4000	**79**	268	169	80	0	**143**
	5000	**78**	229	131	43	-36	**112**
	6000	**78**	190	93	6	-73	**81**
	7000	**78**	152	55	-31	-109	**51**
930	**S.L.**	**78**	556	442	341	249	**380**
	1000	**78**	513	400	299	209	**346**
	2000	**78**	469	358	258	168	**312**
	3000	**78**	426	316	217	128	**279**
	4000	**78**	383	274	176	87	**245**
	5000	**78**	340	232	134	47	**211**
	6000	**77**	298	190	93	7	**177**
	7000	**77**	255	148	52	-34	**143**

15. CRUISE PERFORMANCES

Weight: *1150 kg (2535 lb)*
Pressure Altitude: *0 ft*

RPM*	MAP [inHg]	ISA – 30°C (-15°C) PWR	KTAS	F.C.** [lt/hr]	ISA (15°C) PWR	KTAS	F.C.** [lt/hr]	ISA + 30°C (45°C) PWR	KTAS	F.C.** [lt/hr]
2250	**29.5**	103%	143	28.6	97%	145	27.1	92%	146	25.8
2250	**28**	88%	134	24.5	83%	136	23.2	79%	138	22
2250	**26**	69%	122	19.2	65%	124	18.2	62%	125	17.3
2250	**24**	59%	115	16.6	56%	116	15.7	53%	117	14.9
2250	**22**	46%	103	12.8	43%	103	12.1	41%	103	11.5
2250	**20**	39%	96	11	37%	95	10.4	35%	94	9.9
2100	**28**	84%	132	23.5	80%	134	22.2	76%	135	21.1
2100	**26**	66%	121	18.5	63%	122	17.5	60%	123	16.7
2100	**24**	57%	114	16	54%	114	15.1	52%	115	14.4
2100	**22**	43%	100	12.1	41%	100	11.5	39%	100	10.9
2100	**20**	37%	92	10.2	35%	91	9.7	33%	89	9.2
1900	**26**	61%	117	17.1	58%	118	16.2	55%	119	15.4
1900	**24**	53%	110	14.9	50%	111	14.1	48%	111	13.4
1900	**22**	41%	97	11.4	39%	97	10.8	37%	96	10.2
1900	**20**	35%	89	9.6	33%	88	9.1	31%	85	8.7

* *Propeller RPM*
** *Fuel Consumption for each Engine*

Weight: 1150 kg
Pressure Altitude: 3000 ft

RPM*	MAP [inHg]	ISA – 30°C (-21°C) PWR	KTAS	F.C.** [lt/hr]	ISA (9°C) PWR	KTAS	F.C.** [lt/hr]	ISA + 30°C (39°C) PWR	KTAS	F.C.** [lt/hr]
2388	**26.4**	92%	141	25.7	87%	143	24.3	83%	144	23.1
2250	**26.4**	89%	139	25	85%	141	23.6	80%	143	22.4
2250	**26**	85%	137	23.9	81%	138	22.6	77%	140	21.5
2250	**24**	72%	128	20	68%	129	18.9	64%	130	18
2250	**22**	57%	116	16	54%	117	15.1	51%	118	14.3
2250	**20**	48%	108	13.4	45%	108	12.7	43%	108	12.1
2100	**26.4**	85%	137	23.9	81%	138	22.6	77%	140	21.4
2100	**26**	82%	134	22.8	77%	136	21.6	73%	137	20.5
2100	**24**	69%	125	19.2	65%	127	18.1	62%	128	17.2
2100	**22**	54%	114	15.2	51%	114	14.3	49%	115	13.6
2100	**20**	45%	104	12.6	43%	104	11.9	41%	104	11.3
1900	**26.4**	78%	132	21.9	74%	134	20.7	70%	135	19.6
1900	**26**	75%	130	20.9	71%	131	19.8	67%	132	18.8
1900	**24**	63%	121	17.7	60%	122	16.7	57%	123	15.9
1900	**22**	50%	110	14.1	48%	110	13.3	45%	110	12.6
1900	**20**	42%	101	11.7	40%	101	11.1	38%	100	10.6

* *Propeller RPM*
** *Fuel Consumption for each Engine*

Weight: *1150 kg*
Pressure Altitude: *6000 ft*

RPM*	MAP [inHg]	ISA – 30°C (-27°C) PWR	KTAS	F.C.** [lt/hr]	ISA (3°C) PWR	KTAS	F.C.** [lt/hr]	ISA + 30°C (33°C) PWR	KTAS	F.C.** [lt/hr]
2388	**23.6**	83%	139	23.3	79%	141	22	75%	142	20.9
2250	**23.6**	81%	138	22.6	76%	139	21.4	73%	141	20.3
2250	**22**	68%	129	19.1	65%	130	18.1	61%	131	17.2
2250	**20**	57%	119	15.8	54%	120	14.9	51%	120	14.2
2250	**18**	46%	108	12.9	44%	108	12.2	41%	107	11.6
2100	**23.6**	77%	135	21.6	73%	137	20.4	69%	138	19.4
2100	**22**	65%	126	18.2	62%	127	17.2	59%	128	16.4
2100	**20**	54%	116	15	51%	116	14.1	48%	117	13.4
2100	**18**	44%	106	12.4	42%	106	11.7	40%	105	11.1
1900	**23.6**	71%	130	19.8	67%	132	18.7	64%	133	17.8
1900	**22**	60%	122	16.8	57%	123	15.8	54%	123	15
1900	**20**	50%	112	13.9	47%	112	13.1	44%	112	12.4
1900	**18**	41%	102	11.6	39%	102	10.9	37%	100	10.4

* *Propeller RPM*
** *Fuel Consumption for each Engine*

Weight: *1150 kg*
Pressure Altitude: *9000 ft*

RPM*	MAP [inHg]	ISA – 30°C (-33°C)			ISA (-3°C)			ISA + 30°C (27°C)		
		PWR	KTAS	F.C.** [lt/hr]	PWR	KTAS	F.C.** [lt/hr]	PWR	KTAS	F.C.** [lt/hr]
2388	**21.1**	75%	137	20.9	71%	139	19.7	67%	140	18.7
2250	**21.1**	73%	136	20.3	69%	137	19.2	65%	138	18.2
2250	**20**	65%	130	18.3	62%	131	17.2	58%	131	16.3
2250	**18**	53%	118	14.9	50%	119	14	48%	118	13.3
2100	**21.1**	69%	133	19.4	65%	134	18.3	62%	135	17.4
2100	**20**	62%	127	17.4	59%	128	16.4	56%	128	15.6
2100	**18**	51%	116	14.2	48%	116	13.4	46%	116	12.7
1900	**21.1**	64%	128	17.8	60%	129	16.8	57%	130	15.9
1900	**20**	57%	122	16	54%	123	15.1	51%	123	14.3
1900	**18**	47%	112	13.2	44%	112	12.4	42%	111	11.8

* *Propeller RPM*
** *Fuel Consumption for each Engine*

Weight: *1150 kg*
Pressure Altitude: *12000 ft*

RPM*	MAP [inHg]	ISA – 30°C (-39°C)			ISA (-9°C)			ISA + 30°C (21°C)		
		PWR	KTAS	F.C.** [lt/hr]	PWR	KTAS	F.C.** [lt/hr]	PWR	KTAS	F.C.** [lt/hr]
2388	**18.8**	67%	135	18.8	63%	136	17.7	60%	136	16.7
2250	**18.8**	65%	133	18.2	61%	134	17.2	58%	134	16.3
2250	**18**	60%	129	16.8	57%	129	15.9	54%	129	15
2100	**18.8**	62%	130	17.4	59%	131	16.4	56%	132	15.5
2100	**18**	58%	126	16.1	54%	126	15.2	51%	126	14.4
1900	**18.8**	57%	125	15.9	54%	126	15	51%	126	14.2
1900	**18**	53%	121	14.8	50%	121	13.9	47%	121	13.2

* *Propeller RPM*
** *Fuel Consumption for each Engine*

16. LANDING PERFORMANCES

Weight = *1180 kg*

Flaps: *LAND*
Short Final Approach Speed = *70 KIAS*
Throttle Levers: *Idle*
Runway: *Grass*

Corrections

Headwind: - 5m for each kt (*16 ft/kt*)
Tailwind: + 11m for each kt (*36ft/kt*)
Paved Runway: - *2%* to Ground Roll
Runway slope: - 2.5% to Ground Roll for each +1%

Pressure Altitude [ft]		Distance [m]				
		Temperature [°C]				ISA
		-25	0	25	50	
S.L.	Ground Roll	183	202	220	238	**213**
	At 50 ft AGL	288	312	335	358	**326**
1000	Ground Roll	190	209	228	247	**219**
	At 50 ft AGL	297	321	345	369	**334**
2000	Ground Roll	197	217	237	256	**226**
	At 50 ft AGL	306	331	356	381	**342**
3000	Ground Roll	204	225	245	266	**232**
	At 50 ft AGL	325	352	379	405	**360**
4000	Ground Roll	212	233	255	276	**239**
	At 50 ft AGL	325	352	379	405	**360**
5000	Ground Roll	220	242	264	287	**247**
	At 50 ft AGL	335	363	391	418	**369**
6000	Ground Roll	228	251	275	298	**254**
	At 50 ft AGL	346	375	403	431	**378**
7000	Ground Roll	237	261	285	309	**262**
	At 50 ft AGL	357	387	416	445	**388**
8000	Ground Roll	246	271	296	321	**270**
	At 50 ft AGL	368	399	430	460	**398**
9000	Ground Roll	256	282	308	334	**279**
	At 50 ft AGL	380	412	444	475	**409**
10000	Ground Roll	266	293	320	347	**288**
	At 50 ft AGL	393	426	459	491	420

Weight = *1080 kg*

Flaps: *LAND*
Short Final Approach Speed = *70 KIAS*
Throttle Levers: *Idle*
Runway: *Grass*

Corrections

Headwind: - 5m for each kt (*16 ft/kt*)
Tailwind: + 11m for each kt (*36ft/kt*)
Paved Runway: - *2%* to Ground Roll
Runway slope: - 2.5% to Ground Roll for each +1%

Pressure Altitude [ft]		Distance [m]				
		Temperature [°C]				ISA
		-25	0	25	50	
S.L.	Ground Roll	175	192	210	227	**203**
	At 50 ft AGL	271	293	315	337	**306**
1000	Ground Roll	181	199	218	236	**209**
	At 50 ft AGL	279	302	325	348	**314**
2000	Ground Roll	188	207	226	245	**215**
	At 50 ft AGL	288	311	335	358	**322**
3000	Ground Roll	195	215	234	254	**222**
	At 50 ft AGL	306	331	356	381	**338**
4000	Ground Roll	202	223	243	263	**228**
	At 50 ft AGL	306	331	356	381	**338**
5000	Ground Roll	210	231	252	273	**235**
	At 50 ft AGL	315	342	368	394	**347**
6000	Ground Roll	218	240	262	284	**243**
	At 50 ft AGL	325	353	380	406	**356**
7000	Ground Roll	226	249	272	295	**250**
	At 50 ft AGL	336	364	392	420	**365**
8000	Ground Roll	235	259	283	306	**258**
	At 50 ft AGL	347	376	405	434	**375**
9000	Ground Roll	244	269	294	318	**266**
	At 50 ft AGL	358	388	418	448	**385**
10000	Ground Roll	254	280	305	331	**275**
	At 50 ft AGL	370	401	432	463	**395**

Weight = *930 kg*

Flaps: *LAND*
Short Final Approach Speed = *70 KIAS*
Throttle Levers: *Idle*
Runway: *Grass*

Corrections

Headwind: - 5m for each kt (*16 ft/kt*)
Tailwind: + 11m for each kt (*36ft/kt*)
Paved Runway: - *2%* to Ground Roll
Runway slope: - 2.5% to Ground Roll for each +1%

Pressure Altitude [ft]		Distance [m]				
		Temperature [°C]				ISA
		-25	0	25	50	
S.L.	Ground Roll	150	166	181	196	**175**
	At 50 ft AGL	233	252	271	290	**264**
1000	Ground Roll	156	172	187	203	**180**
	At 50 ft AGL	240	260	280	299	**270**
2000	Ground Roll	162	178	194	211	**185**
	At 50 ft AGL	248	268	288	309	**277**
3000	Ground Roll	168	185	202	219	**191**
	At 50 ft AGL	263	285	307	328	**291**
4000	Ground Roll	174	192	209	227	**197**
	At 50 ft AGL	263	285	307	328	**291**
5000	Ground Roll	181	199	217	235	**203**
	At 50 ft AGL	272	294	317	339	**299**
6000	Ground Roll	188	207	226	244	**209**
	At 50 ft AGL	280	304	327	350	**307**
7000	Ground Roll	195	215	234	254	**215**
	At 50 ft AGL	289	313	338	361	**315**
8000	Ground Roll	203	223	243	264	**222**
	At 50 ft AGL	299	324	349	373	**323**
9000	Ground Roll	210	232	253	274	**229**
	At 50 ft AGL	308	334	360	386	**331**
10000	Ground Roll	219	241	263	285	**237**
	At 50 ft AGL	319	346	372	399	**340**

17. BALKED LANDING CLIMB GRADIENT

Flight conditions (ISA and SL):

Weight:	*1180 kg*
Throttle levers	*Both FULL FORWARD*
Flaps	*T/O*
Landing gear	*DOWN*
Weight	*MTOW (1180 kg)*
Speed	*66 KIAS*
Climb gradient	*10.8% (6.2°)*

18. NOISE DATA

Noise level, determined in accordance with ICAO/Annex 16 4th Ed., July 2005, Vol. I°, Chapter 10, is **67.07** dB(A).

SECTION 6 – WEIGHT and BALANCE

INDEX

1. INTRODUCTION 3

2. WEIGHING PROCEDURES 4
   2.1. Preparation 4
   2.2. Levelling 4
   2.3. Weighing 4
   2.4. Determination of C.G. location 4
   2.5. Weighing record 5
   2.6. Weighing record (II) 5

3. WEIGHTS AND C.G. 7

4. BAGGAGE LOADING 8

5. EQUIPMENT LIST 10

INTENTIONALLY LEFT BLANK

1. INTRODUCTION

This section describes the procedure for establishing the basic empty weight and the moment of the aircraft. Loading procedure information is also provided.

NOTE

Aircraft must be operated in accordance with the limits concerning the maximum takeoff weight and CG excursion as reported in Flight Manual Section 2.

Pilot is responsible for checking the weight and CG excursion are compliant with the related limits. CG excursion and weight limits are reported in Section 2 – Limitations.

2. WEIGHING PROCEDURES

2.1. PREPARATION

- Carry out weighing procedure inside closed hangar
- Remove from cabin any object unintentionally left
- Make sure Flight Manual and mandatory documents are on board
- Align nose wheel
- Drain fuel via the specific drain valve
- Oil, hydraulic fluid and coolant liquid at the operating levels
- Move sliding seats to most forward position
- Raise flaps to fully retracted position
- Place control surfaces in neutral position
- Place scales (min. capacity 300 kg) under each wheel

2.2. LEVELLING

- Level the aircraft (the reference for longitudinal levelling is made putting a spirit-level on the cabin floor as shown in the Aircraft Maintenance Manual).
- Adjust longitudinal attitude deflating nose tire

2.3. WEIGHING

- Record weight shown on each scale
- Repeat weighing procedure three times
- Calculate empty weight

2.4. DETERMINATION OF C.G. LOCATION

- Drop a plumb bob tangent to the wing leading edge and trace a reference mark on the floor (see Figure on Para. 2.5 or 2.6)
- Repeat the operation for other wing
- Stretch a taught line between the two marks
- Measure the distance between the reference line and both main and nose wheel axis (A and B distances respectively)
- Using recorded data it is possible to determine the aircraft C.G. location and the aircraft moment (see following table)

2.5. WEIGHING RECORD

Model ***P2006T*** *S/N*:_____ *Weighing no.* ____ *Date*:_____

Datum: leading edge vertical

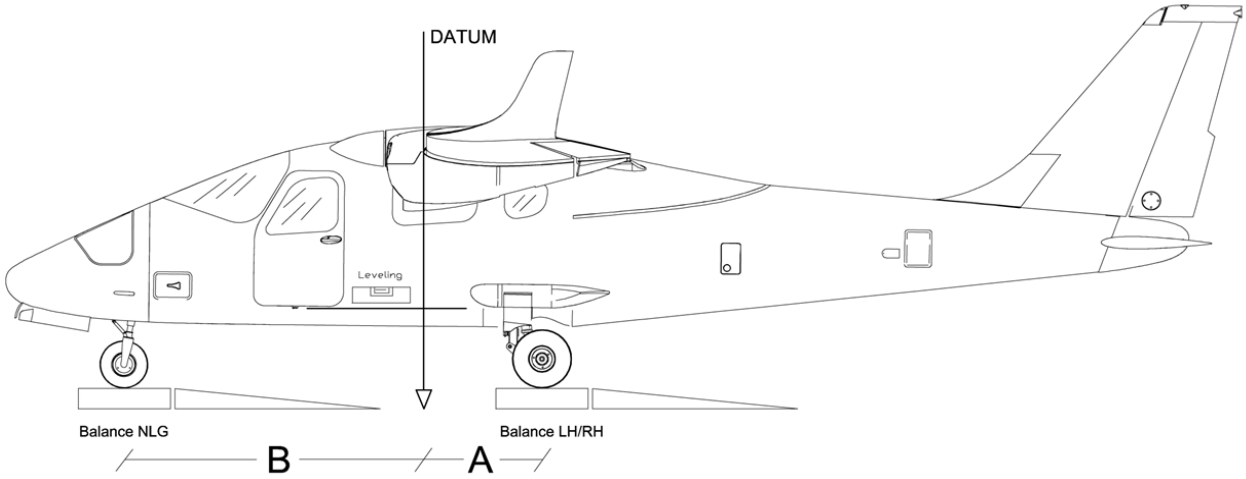

	[kg] or [lbs]
Nose wheel weight	W_1 =
LH wheel weight	W_L =
RH wheel weight	W_R =
$W_2 = W_L + W_R$ =	

	[m] or [ft]
Plumb bob distance LH wheel	A_L =
Plumb bob distance RH wheel	A_R =
Average distance $(A_L + A_R)/2$	A =
Plumb bob distance from nose wheel	B =

Empty weight We = $W_1 + W_2$ = [kg] or [lbs]

$$D = \frac{W_2 \cdot A - W_1 \cdot B}{We} =$$ [m] or [ft]

D% = (D / 1.339 m) x 100 = or D% = (D / 4.39 ft) x 100 =

Empty weight moment: M = (D ·We) = [*m* · *Kg*] or [Ft · Lbs]

Maximum takeoff weight	W_T =	[kg] or [lbs]
Empty weight	We =	[kg] or [lbs]
Max. useful load W_T - We	Wu =	[kg] or [lbs]

Signature

_____

2.6. WEIGHING RECORD (II)

Model ***P2006T*** *S/N*:_____ *Weighing no.* ____ *Date*:_____

Datum: leading edge vertical

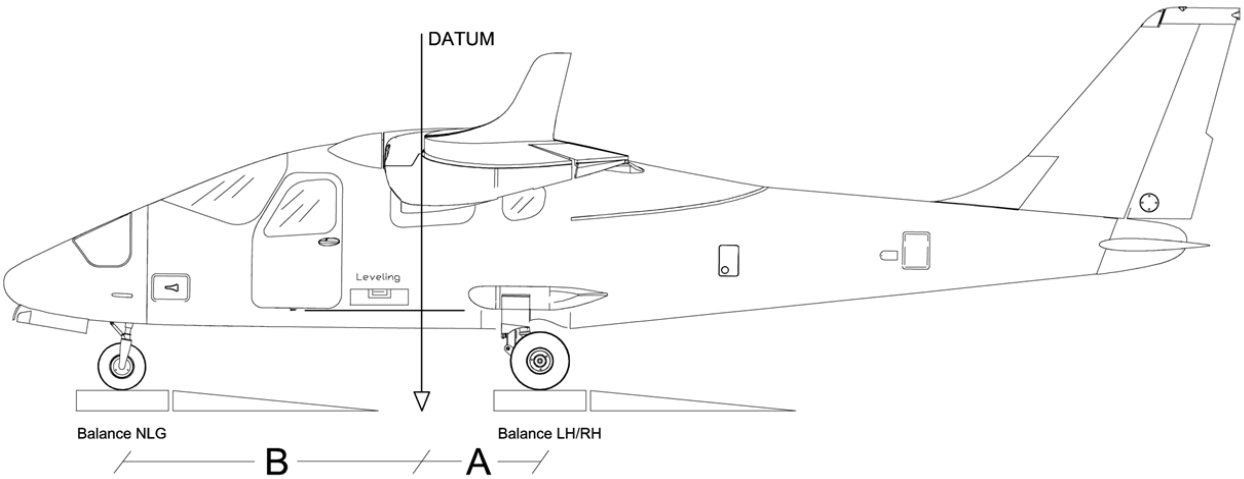

	[kg] or [lbs]
Nose wheel weight	W_1 =
LH wheel weight	W_L =
RH wheel weight	W_R =
$W_2 = W_L + W_R$ =	

	[m] or [ft]
Plumb bob distance LH wheel	A_L =
Plumb bob distance RH wheel	A_R =
Average distance $(A_L + A_R)/2$	A =
Plumb bob distance from nose wheel	B =

Empty weight We = $W_1 + W_2$ = [kg] or [lbs]

$$D = \frac{W_2 \cdot A - W_1 \cdot B}{We} =$$ [m] or [ft]

D% = (D / 1.339 m) x 100 = or D% = (D / 4.39 ft) x 100 =

Empty weight moment: M = (D ·We) = [*m* · *Kg*] or [Ft · Lbs]

Maximum takeoff weight	W_T =	[kg] or [lbs]
Empty weight	We =	[kg] or [lbs]
Max. useful load W_T - We	Wu =	[kg] or [lbs]

Signature

_____

WEIGHTS AND C.G.

C.G. position can be defined by means of the chart below.

The pilot is responsible for ensuring the correct useful load loading.

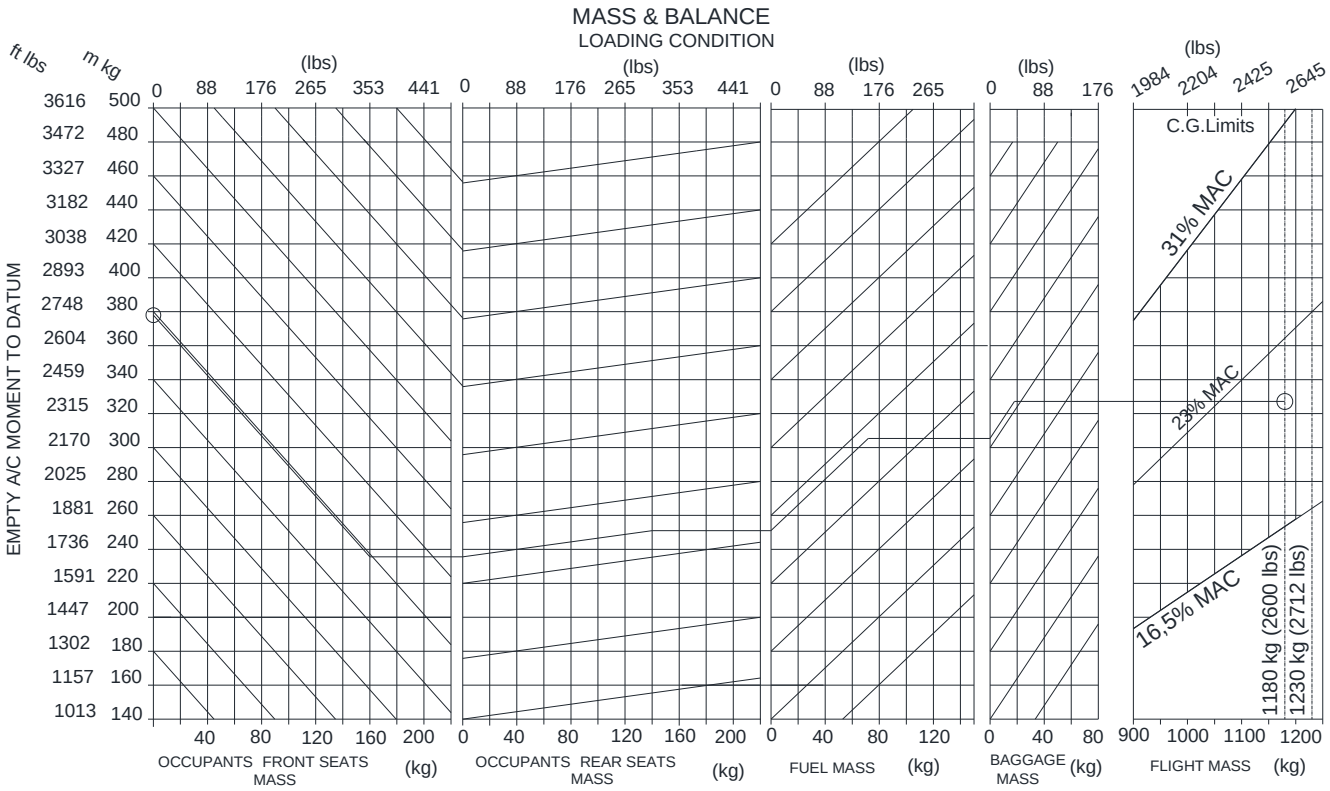

Figure 1

Example

A/C empty mass moment	378 kgm
A/C empty mass	790 kg
Occ. front seats	160 kg
Occ. rear seats	140 kg
Fuel	72kg
Baggage	18 kg
A/C T.O. weight	1180kg

3. BAGGAGE LOADING

The baggage loading in the dedicated compartment must be carried out in accordance with diagram addressed on PAR. 03 and with C.G. excursion and weight limitations reported in Section 2.

Pilot is provided with a red tie-down net and snap fasteners allowing for securing the loads on the compartment floor.

CAUTION

Loading the baggage, make sure that you correctly stretched the net which must be secured to the four vertices of the floor.

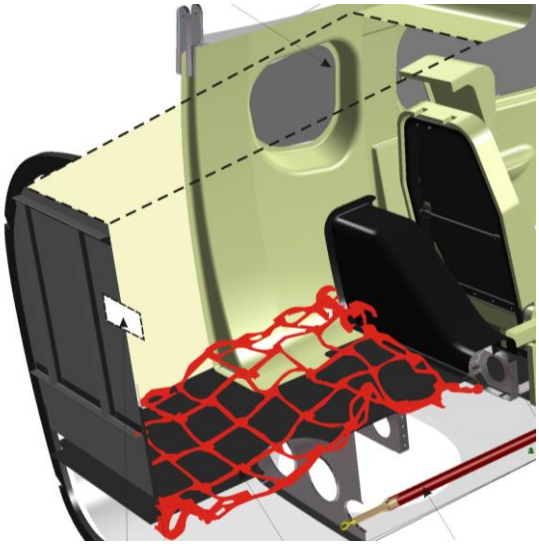

INTENTIONALLY LEFT BLANK

4. EQUIPMENT LIST

The following is a list of equipment which may be installed in the ***P2006T***.
The items marked with an "X" were installed on the airplane described at the beginning of the list and they are included in the Basic Empty Weight.

It is the owner's responsibility to retain this equipment list and amend it to reflect changes in equipment installed in this airplane.

EQUIPMENT LIST	AIRCRAFT S/N:		DATE:		
REF.	**DESCRIPTION**		**INST**	**WEIGHT** [kg]	**ARM** [m]
	INSTRUMENTS & AVIONICS				
A-1	2nd airspeed indicator – UMA T6-311 – 200			0.37	-1.4
A-2	2nd airspeed indicator – Mikrotechna 1116.B2B2			0.37	-1.4
A-3	2nd attitude indicator – Kelly Manufacturing RCA26AK-12			1	-1.4
A-4	2nd altimeter – United Instruments 5934PM-3A84 01770028-05			0.6	-1.4
A-5	2nd altimeter – Mikrotechna 1128.12B6			0.6	-1.4
A-6	2nd altimeter – Mid-Continent 15035-01102			0.36	-1.4
A-7	2nd altimeter – Mid-Continent 4200-10			0.73	-1.4
A-8	Turn and bank indicator – RCA 83 A-11			1.2	-1.4
A-9	Turn coordinator Mid Continent 1394T100-7Z or -14RB			0.81	-1.4
A-10	Mid-Continent MD302			0.73	-1.4
A-11	Garmin GNS-430W GPS/WAAS COM/NAV			3	-1.4
A-12	Garmin GNS-530W GPS/WAAS COM/NAV			3.18	-1.4
A-13	Garmin GMA340 audio panel			0.8	-1.4
A-14	Garmin GMA347 or GMA 345 audio panel			0.8	-1.4
A-15	Garmin SL30 VHF COMM/NAV			1.3	-1.4
A-16	Garmin GTX328 Transponder			1.9	-1.4
A-17	Garmin GTX330 Transponder			1.5	-1.4
A-18	Garmin GTX33 Transponder			1.5	-1.4
A-19	Garmin GTX345R Transponder			1.5	-1.4
A-20	Becker BXP 6401-2-(01) Mode S transponder			0.8	-1.4
A-21	Garmin GI106( ) VOR/LOC/GS Indicator			0.4	-1.4
A-22	Mid-Continent MD 200-306 VOR/LOC/GS Indicator			0.4	-1.44
A-23	Kelly Manufacturing RCA15AK-( ) Directional Gyro			1	-1.4
A-24	ELT Adams Aviation Artex ME406			0.9	0.8
A-25	ELT KANNAD 406 AF Integra or Compact			0.9	0.8
A-26	Garmin GMA 1347/1360 audio panel			1.1	-1.4

EQUIPMENT LIST	AIRCRAFT S/N:		DATE:		
REF.	**DESCRIPTION**		**INST**	**WEIGHT** [kg]	**ARM** [m]
	HONEYWELL Bendix/King KCS 55A Compass System				
H-1	KI 525A Pictorial Navigation Indicator			1.53	-1.4
H-2	KG 102A Directional Gyro			1.95	1
H-3	KA 51B Slaving Control and Compensator Unit			0.1	-1.4
H-4	KMT 112 Magnetic Slaving Transmitter			0.15	2.2
	HONEYWELL Bendix/King KR87 ADF System				
H-5	ADF KR87 receiver			1.5	1
H-6	Indicator KI 227			0.3	-1.4
H-7	Indicator KI 229			1.3	-1.4
H-8	Static inverter Marathon PC-50			2	1
	HONEYWELL Bendix/King KN 63 DME System				
H-9	Indicator DME KDI 572			0.4	-1.4
H-10	Transceiver DME KN 63			1.3	1
	S-TEC Fifty Five X Autopilot System				
S-1	Turn coordinator S-TEC 6405-14L (Mid Continent 1394T100-14RB)			0.81	-1.5
S-2	PRGMR/CMPTR 01192-0-2TF			1.36	-1.4
S-3	Roll servo 0105-5-R9			1.31	-0.71
S-4	Pitch servo 0107-11-P4			1.31	3.55
S-5	Altitude Transducer 0111			0.2	-1.9
S-6	Pitch Trim servo S-TEC 0105-T11			1.3	2.8
	Becker 3500 ADF System				
B-1	ADF Becker 3500 Receiver (RA3502)			1.0	0.92
B-2	RMI Converter (AC 3504–01)			0.75	0.92
B-3	ADF Antenna (AN 3500)			1.7	-0.25
B-4	AK-550-6 DC/DC converter			1	-0.85
	WX500 Stormscope				
SS-1	Processor (including mounting tray) (805-11500-001)			1.10	2.51
SS-2	Antenna NY163 (805-10930-001)			0.38	3.60
	Garmin GTS 800 TAS				
T-1	Garmin GTS 800 TAS (011-01356-00)			4.75	1.30
T-2	GA 58 Directional Antennas (010-00720-00)			0.78	-0.30

EQUIPMENT LIST	AIRCRAFT S/N:		DATE:		
REF.	**DESCRIPTION**		**INST**	**WEIGHT** [kg]	**ARM** [m]
	MISCELLANEOUS				
M1	Front LH seat GEVEN E5-01-003-T01 or E5-01-007-T01 or E5-01-009-T03			9	-0.89
M2	Front RH seat GEVEN E5-01-004-T01 or E5-01-008-T01 or E5-01-010-T03			9	-0.89
M3	Rear LH seat GEVEN E5-01-003-T01 or E5-01-007-T01 or E5-01-009-T03			9	0.23
M4	Rear RH seat GEVEN E5-01-004-T01 or E5-01-008-T01 or E5-01-010-T03			9	0.23
M5	Front LH Seat TECNAM 26-6-5100-001			11	-0.89
M6	Front RH Seat TECNAM 26-6-5100-002			11	-0.89
M7	Rear LH Seat TECNAM 210-10-5300-801			10	0.23
M8	Rear RH Seat TECNAM 210-10-5400-801			10	0.23
M9	Fire extinguisher - Fire Fighting Enterprises Ltd BA51015-3			2	-1.5
M10	Fire extinguisher H3R-Aviation RTA-600			0.8	-1.5
M11	Fire extinguisher AMEREX A344T			1.04	-1.5
M12	First aid kit – DIN 13164			0.2	0.8
M13	Torch			0.15	-1.5
M14	Battery GILL G35 - 13Volt - 23Ah			12.2	3.7
M15	TABI-1800 sensor			31.0	-0.45

INTENTIONALLY LEFT BLANK

SEZIONE 7 – AIRFRAME and SYSTEMS DESCRIPTION

INDEX

1. INTRODUCTION 3
2. AIRFRAME 3
3. POWERPLANT 9
4. PEDESTAL CONTROLS 12
5. CABIN OVER-HEAD PANEL CONTROLS 15
6. INTERNAL LIGHTS 16
7. EXTERNAL LIGHTS 17
8. FUEL SYSTEM 19
9. LANDING GEAR SYSTEM 21
10. BRAKES 25
11. VENTILATION 26
12. CABIN HEAT 26
13. SEATS AND SAFETY BELTS 26
14. DOORS 27
15. BAGGAGE COMPARTMENT 28
16. PLACARDS 31
17. INSTRUMENTS PANEL 37
18. ELECTRICAL SYSTEM 40

INTENTIONALLY LEFT BLANK

1. INTRODUCTION

This section provides aircraft and systems description and operation.

2. AIRFRAME

2.1. WING

Each wing consists of a central light alloy torque box which carries all the wing bending, shear and torque loads; an aluminium leading edge is attached to the front spar while flap and aileron are hinged to the rear spar.

The torque box houses an integrated fuel tank and supports the engine mount.

Flap and aileron, respectively located inboard and outboard of wing and made up of light alloy, are constructed with a central spar to which front and rear ribs are jointed. Wrapped-around aluminium stressed skin panels cover all the structures. Steel alloy attachments connect left and right wing to each other.

Following figure shows the left wing fitted with the engine nacelle, fuel tank and composite winglet. Steel alloy attachments link left and right wing to each other.

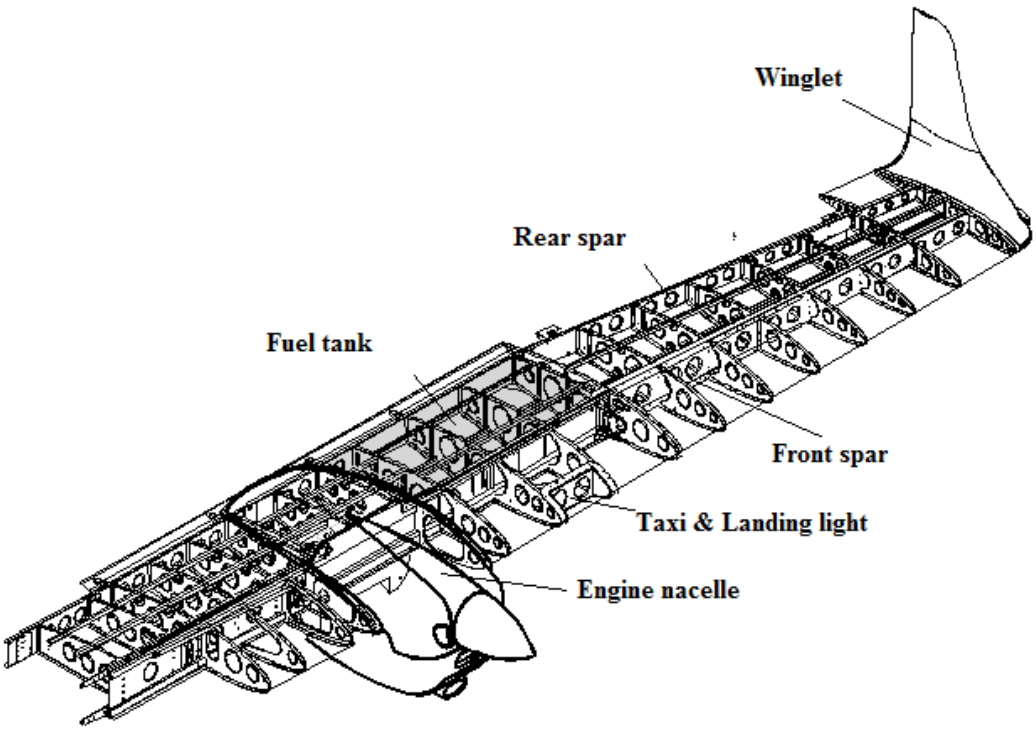

Figure 1. – Left wing structure

2.2. FUSELAGE

The fuselage is constituted by a light-alloy semi-monocoque structure wrapped-around by stressed skin panels. Radome and stern fairing are of composite material. Cabin and baggage compartment floor is a warping of beams and keelsons supporting the seats guides and other components.

Two spar frames support on the top the wings attachments and on the bottom the *sponson* beans sustaining the main landing gear. The forward frame, to which radome is connected, supports a steel trestle to which the nose landing gear is connected.

The front and rear seats access occur by means of two doors located in the opposite sides of the fuselage; a ditching emergency exit is available on the top of the cabin. In tail cone, two spar frames support the horizontal and vertical empennages attachments.

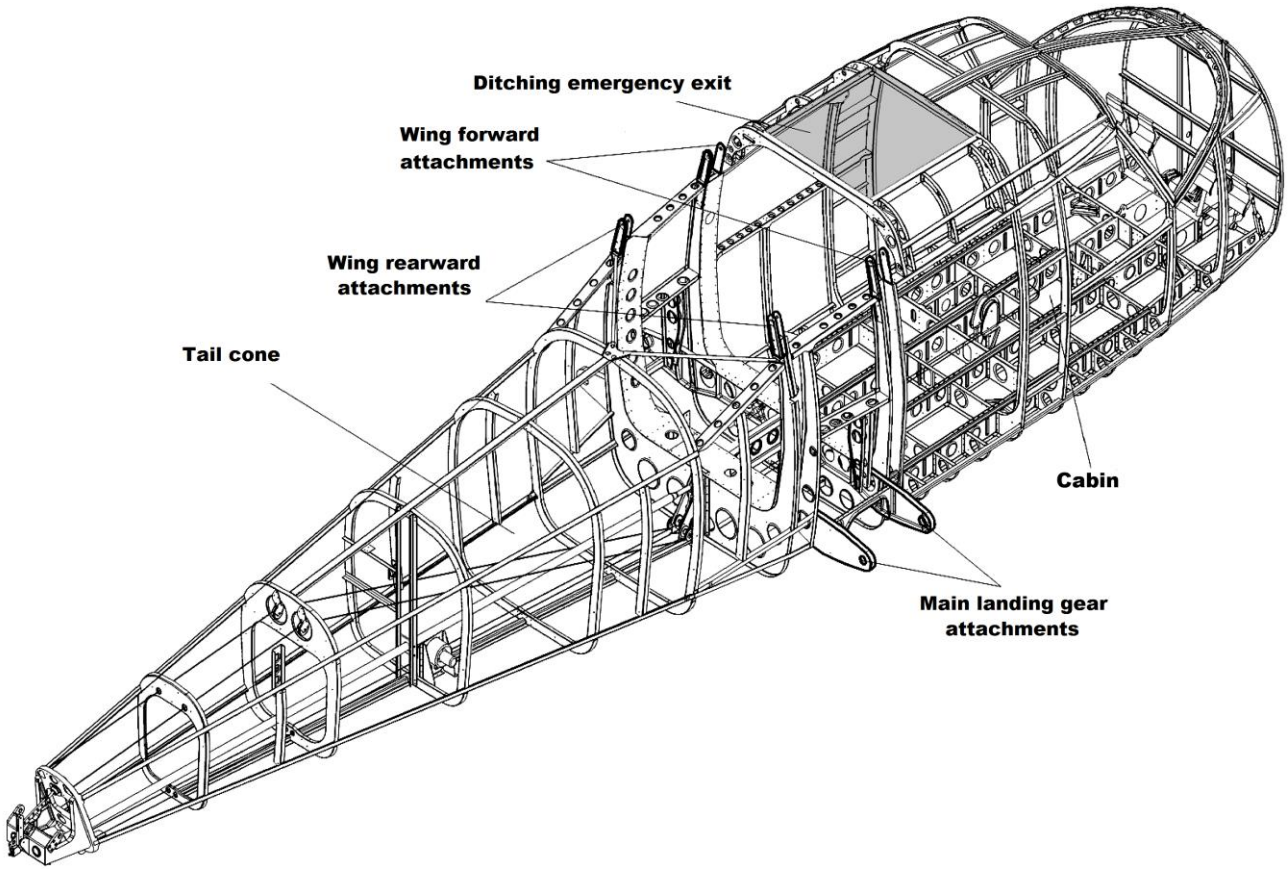

Figure 2. – Fuselage structure

2.3. EMPENNAGES

The vertical tail is entirely metallic: vertical fin is made up of a twin spar with aluminium alloy stressed skin. Rudder, providing directional control of the airplane, is made up of aluminium alloy.

The rudder is connected to the vertical tail at two hinge points. A trim tab system increases directional stability of the airplane.

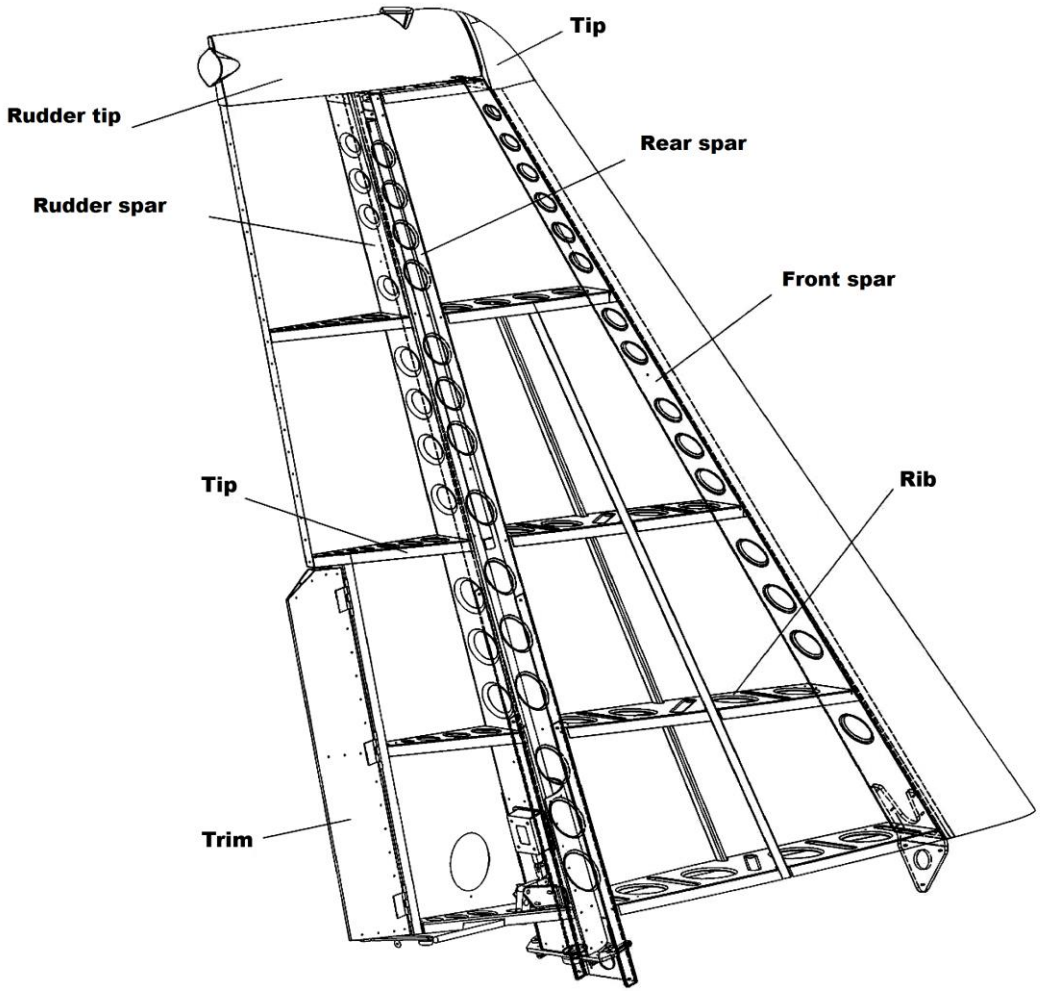

Figure 3. – Vertical empennage structure

The horizontal empennage is an all-moving type (stabilator); its structure consists of a twin spar to which front and rear ribs are jointed and it is covered by stressed aluminium alloy skin. The trim tab completes the assy.

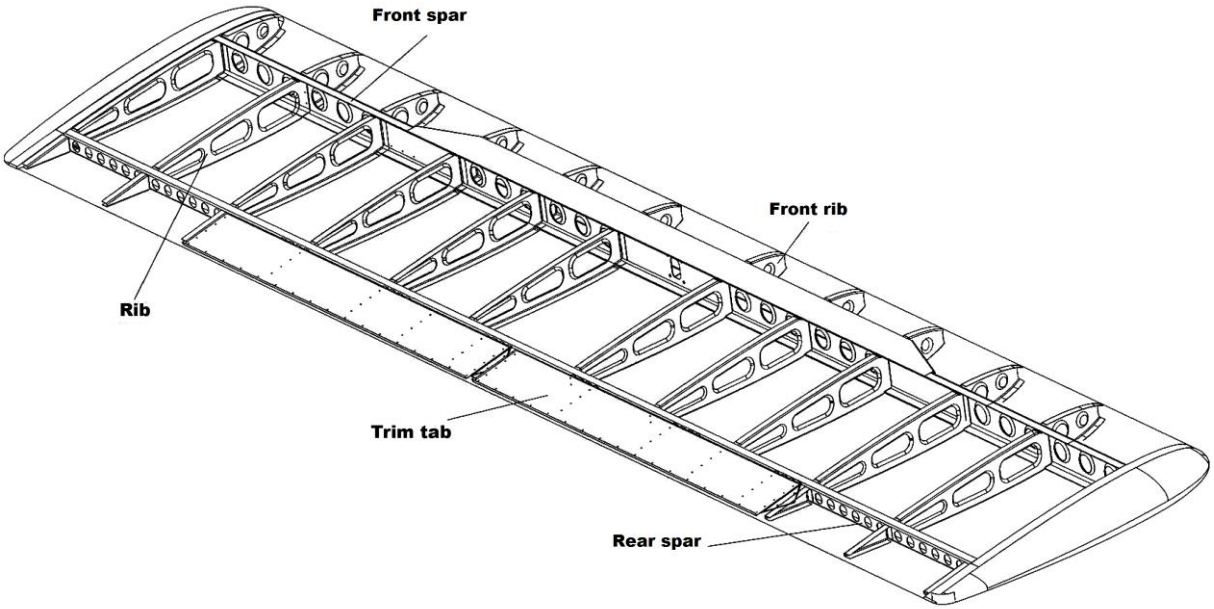

Figure 4. – Stabilator structure

2.4. FLIGHT CONTROLS

The main flight control system controls the airplane in three axes. All primary controls (ailerons, rudder and stabilator) are manually operated by a conventional control column and rudder pedals, pulleys, cables, bellcranks and rods.

The secondary flight controls consist of a two-axis trim system and a flaps system.

Complete dual controls are provided for pilot and co-pilot.

Longitudinal control acts through a system of push-pull rods connected to the control column and moving the stabilator whose anti-tab winglet works also as trim tab. Autopilot pitch servo (if installed) is connected to the push-pull rods system through driving cables.

Longitudinal trim is performed by a small tab positioned on the stabilator and manually operated via a control wheel positioned between the two crew seats. As optional, it is available an electrically operated longitudinal trim which it is also controlled by the autopilot system, when installed.

Trim position is monitored by an indicator on the instrument panel. A trim disconnect toggle switch is provided.

Ailerons control is of mixed type with push-rods and cables; a cable control circuit is confined within the cabin and it is connected to a pair of push-pull rod systems positioned in each main wing which control ailerons differentially.

The U-shaped control wheels, hinged on the top of the control column, control the ailerons. Control wheel motion is transferred to the ailerons through a cable loop, up to the interconnecting rod linking the two push-pull rod systems which finally transmit the motion to the ailerons.

When either aileron control wheel is rotated, the crossover cable rotates the other control wheel.

The left aileron has a trim tab adjustable on ground: its deflection allows for lateral trimming of the airplane.

Both flaps are extended via a single electric actuator controlled by a switch on the instrument panel. Flaps act in continuous mode; the analogue indicator displays three markings related to 0°, takeoff (T/O) and landing (FULL) positions.

An aural warning is generated whenever the flaps are lowered to the FULL position and the landing gear is not down-locked.

Rudder is operated through a cable system. A rudder trim tab allows aircraft directional trimming, especially in case of OEI operation: it is electrically operated via a switch located on the central console placed between crew seats.

Its position is monitored by an indicator on the instrument panel. A trim disconnect toggle switch is provided.

INTENTIONALLY LEFT BLANK

3. POWERPLANT

P2006T is equipped with two four-cylinder four-stroke Rotax 912S engines of 98hp (73kW) each, both rotating clockwise. These are partially liquid cooled and they feature an integrated reduction gear driving constant speed propellers with pitch feathering devices.

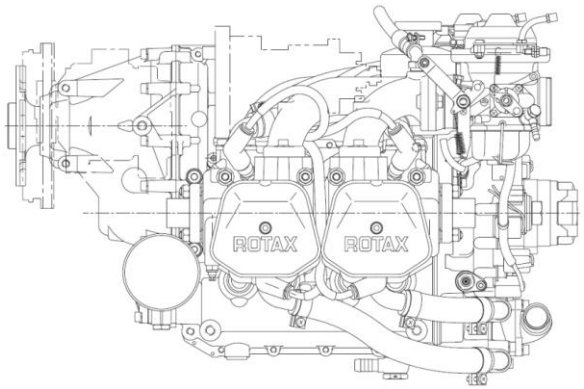

Figure 5. – Rotax 912S

Cooling system is designed for liquid cooling of the cylinders heads and ram-air cooling of the cylinders. The liquid system is a closed circuit with an overflow bottle and an expansion tank.

The coolant flow is forced by a water pump, driven from the camshaft, from the radiator to the cylinder heads. From the top of the cylinder heads the coolant passes on to the expansion tank (item 1, Figure below). Since the standard location of the radiator (2) is below engine level, the expansion tank, located on top of the engine, allows for coolant expansion.

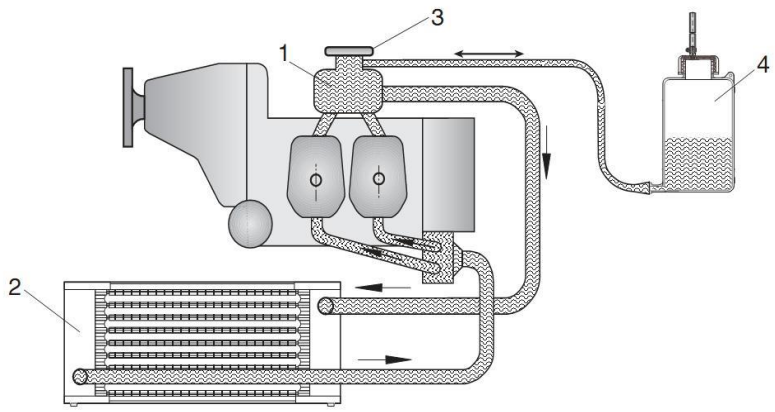

Figure 6. – Liquid cooling system schematic

The expansion tank is closed by a pressure cap (3) fitted with pressure relief valve and return valve. At temperature rise and expansion of the coolant, the pressure relief valve opens and the coolant will flow via a hose at atmospheric pressure to the transparent overflow bottle (4). Once cooled down, the coolant will be sucked back into the cooling circuit.

The engine is provided with a dry sump forced lubrication system with an oil pump with integrated pressure regulator. A thermostatic valve regulates the oil flow to the heat exchanger (oil radiator) on the basis of oil temperature: this allows the engine starting in cold conditions.

The oil tank is installed behind the firewall protected from heat sources. Some holes on the bracket structure allow for air ventilation

The reservoir is fitted with a dipstick; a hose, immediately located beneath the filler cap, allows for oil relief discharged in a safe zone in the cowling, far from exhausts and other heat sources.

Following powerplant instruments are provided:

- LH and RH RPM Indicator
- LH and RH Manifold Pressure Indicator
- LH and RH Oil Pressure Indicator
- LH and RH Oil Temperature Indicator
- LH and RH Cylinder Head Temperature Indicator

3.1. ENGINE FEATURES

Manufacturer	Bombardier-Rotax GmbH
Model	912 S3
Certification basis	FAR 33, Amendment 15
Type Certificate	EASA TCDS no. E.121 dated 1st April 2008
Engine type	4 cylinders horizontally opposed with 1352 c.c. of overall displacement, liquid cooled cylinder heads, ram-air cooled cylinders, two carburetors, integrated reduction gear box with shock absorber.
Maximum power (at declared rpm)	73.5 kW (98.6hp) @ 5800 rpm –5 min. maximum 69.0 kW (92.5hp) @ 5500 rpm (continuous)

3.2. PROPELLER FEATURES

Manufacturer	MT Propeller
Type certificate	LBA 32.130/086 (MTV-21 series)
Model	MTV-21-A-C-F/CF178-05
Blades/hub	2 wood/composite blades, aluminium hub
Diameter	1780 mm (no reduction allowed)
Type	Variable pitch hydraulically controlled

3.3. PROPELLER GOVERNOR FEATURES

Manufacturer	MT Propeller
Model	P-875-12
Type	Hydraulic

4. PEDESTAL CONTROLS

Following picture shows the controls installed on the central pedestal.

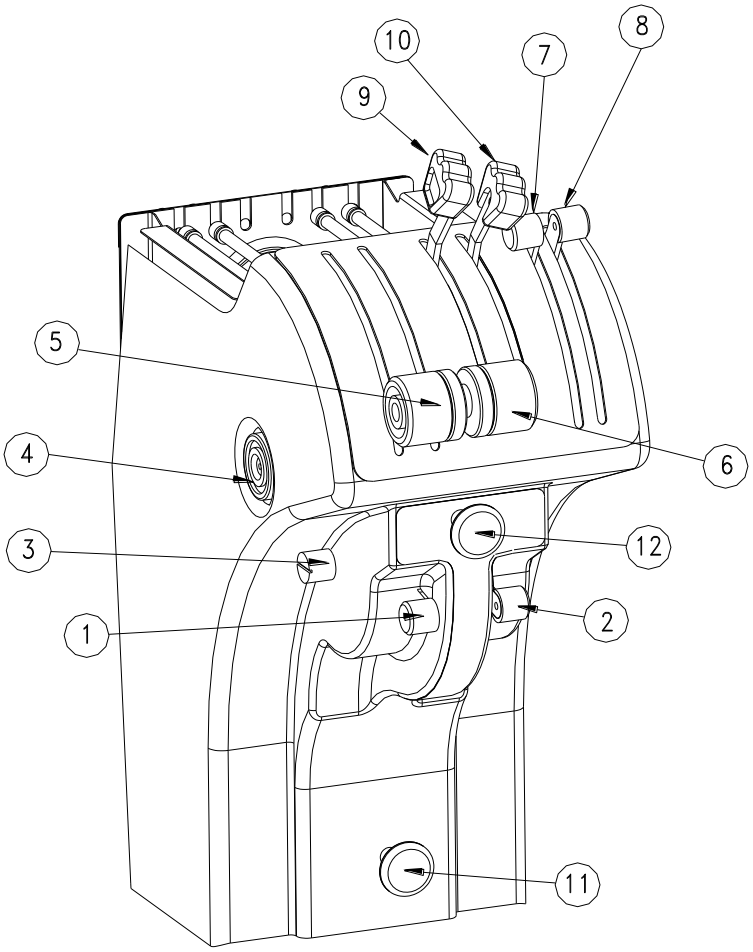

Figure 7. – Pedestal controls

No	Description
1 and 2	Choke control
3	Choke friction knob
4	Upper levers friction knob
5-6	LH and RH Throttle lever
7-8	LH and RH Carburetor Heating lever
9-10	LH and RH Propeller Pitch Control lever
11	Parking brake
12	Windshield defrost control knob

NOTE

Aircraft not embodying the Design Change 2006/66 "New Powerplant control setting layout" or the SB 039-CS "P2006T New powerplant controls layout" feature a different pedestal levers layout: propeller and carb. heat levers position are inverted.

It is possible to adjust the throttle, propeller and carburettor heat levers friction by appropriately tightening the friction knob located on the central console.

A similar device is provided for engine choke controls.

Carburettor heat control knobs are located between throttle and propellers levers; when the knobs are fully pulled backwards, carburettors receive maximum hot air.

During normal operations, the knobs are fully forward set (carburettors heating set to OFF).

The console houses also the parking brake and windshield defrost control knobs.

INTENTIONALLY LEFT BLANK

5. CABIN OVER-HEAD PANEL CONTROLS

Following picture shows the controls installed on the cabin over-head panel.

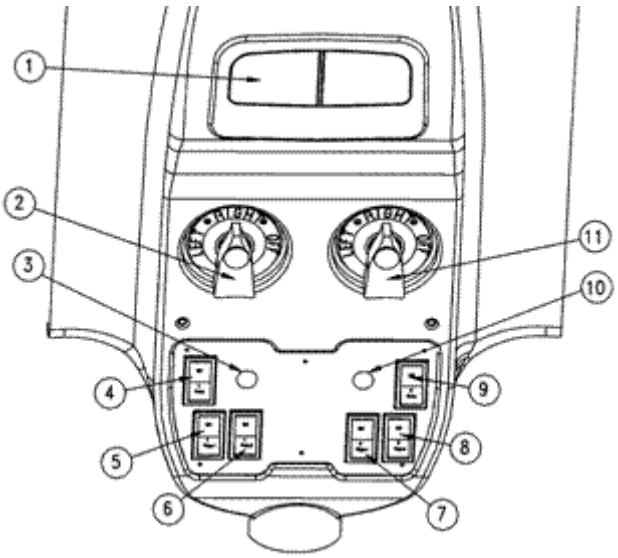

Figure 8. – Cabin head panel controls

No	Description
1	Cabin Light
2	LH Fuel selector valve
3	LH Electric Starter
4	LH electric fuel pump
5	LH Engine ignition 1
6	LH Engine ignition 2
7	RH Engine ignition 1
8	RH Engine ignition 2
9	RH electric fuel pump
10	RH Electric Starter
11	RH Fuel selector valve

6. INTERNAL LIGHTS

Internal lights system is composed by following equipment:

• **Cabin light**, providing lighting for crew and passengers compartment;

• **Instruments lights**, which in turn are composed by three sub-systems each one fitted with dimming device:

- Switches built-in lights
- Avionics lights
- Cockpit lights

• **Emergency light**

The **cabin light** is a ceiling light, fitted with control switches, located on the over-head panel in correspondence of the crew seats.

About the **instrument lights** (controlled by a switch on the RH instrument panel), the switches built-in lights concern the instrument panels switches lighting, the avionics lights concern the avionic equipment lighting and the cockpit lights concern two lights located on the over-head panel illuminating LH and RH instrument panels (see Figure below).

All above mentioned lights are supplied by the battery bus apart from the **Emergency light** which is directly connected to the battery. It is a five-leds light located in the over-head panel (see Figure below) controlled by a switch installed on the LH breakers rack.

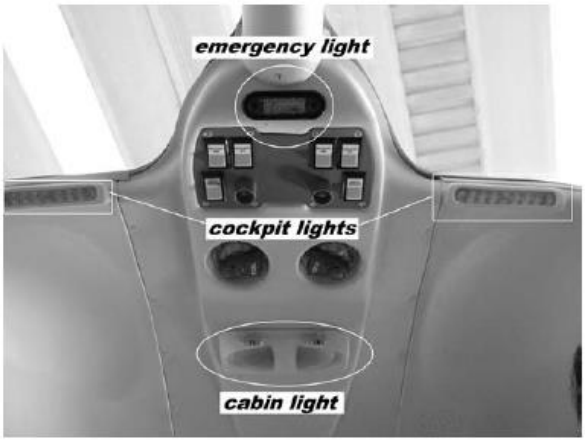

Figure 9. – Over-head panel lights arrangement

7. EXTERNAL LIGHTS

External lights system consists of the following equipment (see Figure below):

• **NAV Lights**: they provide, by means of three position lights, the aircraft flight direction identification.

• **Strobe Lights**: they provide aircraft identification to prevent collision. They are located, like the above mentioned NAV lights, on the winglets and on the top of the vertical fin.

• **Taxi Light**: supports taxi maneuvering on the ground at night. It is installed on the left wing leading edge.

• **Landing Light**: provides ground reference information during final approach, touchdown, ground roll and take off and illuminates any major obstructions in the airplane approach glide path or on runway at night. It is installed on the left wing leading edge.

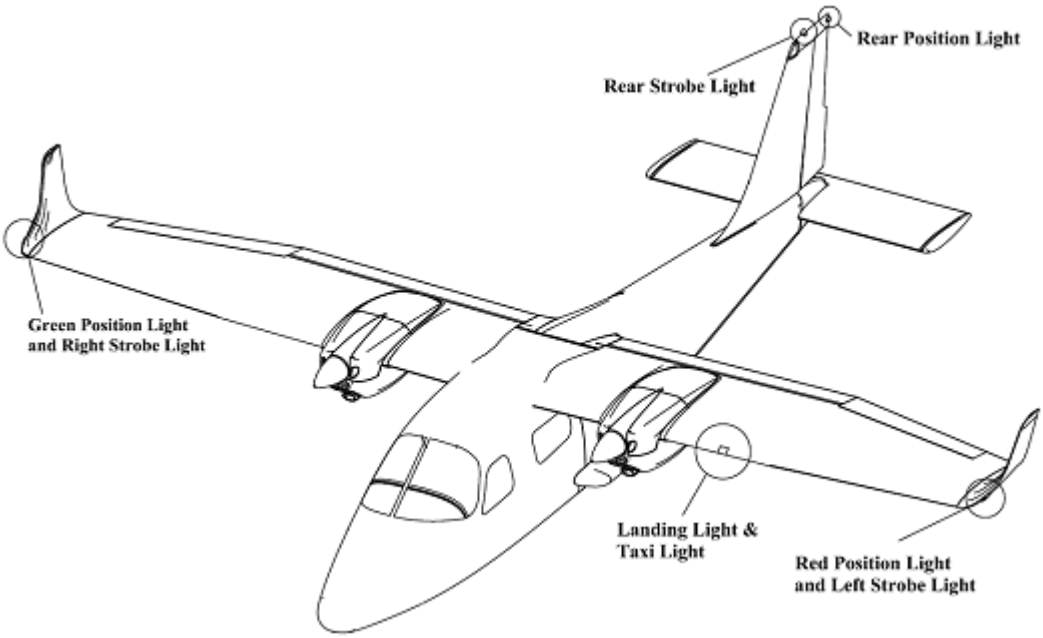

Figure 10. – External lights arrangement

All mentioned lights, whose circuits are protected by dedicated breakers, are activated by the related switches on the right instrument panel: see below.

Figure 11. – Lights switches panel

8. FUEL SYSTEM

Fuel system consists of two integrated tanks inside the wing torque boxes and fitted with inspection doors.

Each fuel tank has a capacity of 100 litres and is equipped with a vent valve (its outlet is located on the lower wing skin) and a sump fitted with a drain valve for water/moisture drainage purposes.

An electric fuel pump feeds the pertinent engine in case of engine-driven pump failure. The fuel Gascolator (a sediment-filter bowl) is located beneath the engine nacelle, between the fuel tank and the electrical pump, in correspondence of the fuel system lowest point. It is fitted with a drain valve which allows for the overall fuel line drainage.

Fuel quantity indicators and fuel pressure indicators for each engine are located on the RH instrument panel.

In normal conditions, to supply fuel to engines, each engine pump sucks fuel from the related tank; crossfeed is allowed by fuel valves located on the front spar and controlled by Bowden cables from the fuel selectors located on the cabin overhead panel.

Left fuel selector manages the left engine feeding, allowing fuel supply from the left fuel tank or from the right one (crossfeed).

Right fuel selector manages the right engine feeding, allowing fuel supply from the right fuel tank or from the left one (crossfeed).

Each selector can be set in OFF position only pulling and simultaneously rotating the lever: this avoids an unintentional operation.

CAUTION

Use of Aviation Fuel Avgas 100LL results in greater wear of valve seats and greater combustion deposits inside cylinders due to higher lead content. Make reference to Rotax Maintenance Manual who provides dedicated checks due to the prolonged use of Avgas.

System schematic is shown on the following Figure.

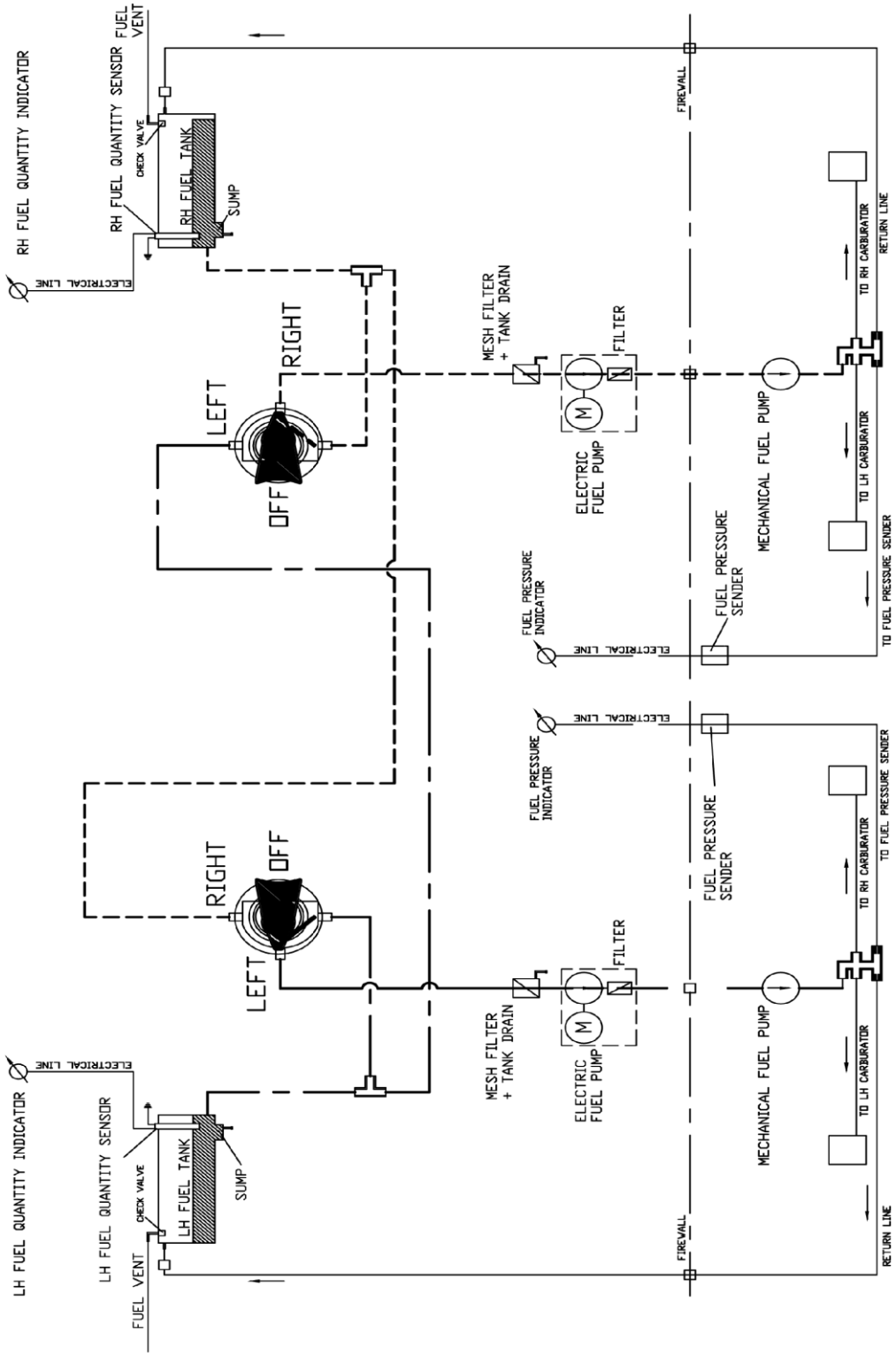

Figure 12. – Fuel system schematic

9. LANDING GEAR SYSTEM

The landing gear retraction system is of electro-hydraulic type, powered by a reversible pump which is electrically controlled by the LG control knob located on the LH instrument panel and by the legs position micro switches: these ones allow for detecting landing gear "down-locked" and "up" positions and for alerting the pilot by aural means should the approach and landing configuration be incorrect, in terms of flaps/throttle levers/landing gear position, in order to avoid an unintentional gear-up landing.

The system operates in two modes: normal and emergency.

Normal operation provides gear extension and retraction by means of hydraulic jacks. Gears extension is helped by gravity also.

Emergency operation only provides landing gear extension by means of a hydraulic accumulator which discharges pressurized oil in the above mentioned jacks.

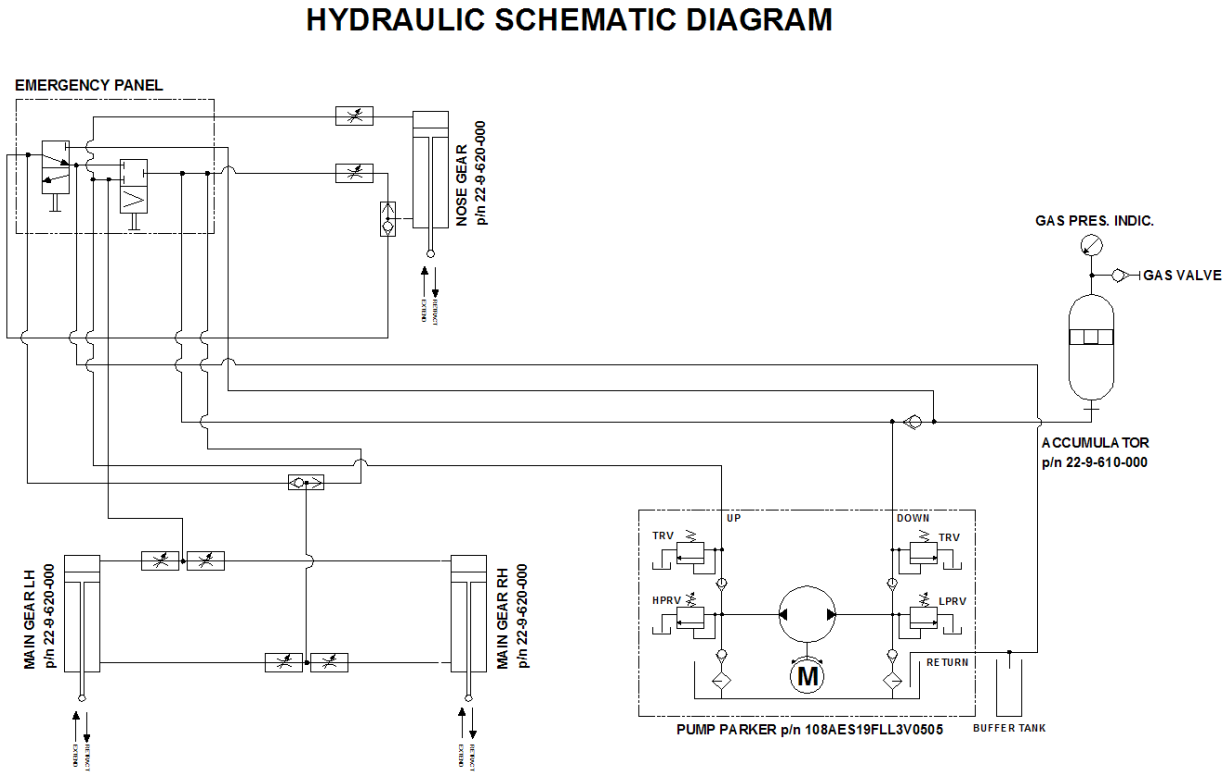

Figure 13. LG hydraulic system schematic

Hydraulic oil, contained in an integrated reservoir located inside the Hydraulic Power Pack, is pressurized by a reversible electric pump: as the LG control knob is placed in either the UP or DOWN position, the pump directs the fluid through the related pressure line toward each hydraulic jack.

In order to prevent an inadvertent LG retraction, the control knob must be pulled before being pushed upward for UP command.

The emergency hydraulic accumulator is used for the landing gear extension: normal extension line and emergency extension line converge in correspondence of the shuttle valves (two valves: the first one for NLG and the second one for MLG emergency operation).

The emergency accumulator nitrogen pressure indicator is located on the tail cone, left side; on ground, a red push-button located beneath the pressure indicator allows the electrical pump for charging the accumulator should the nitrogen pressure be below the lower limit indicated on the placard.

Emergency extension is controlled by two distributors located on the cabin floor, under a removable cover in correspondence of the pilot seat.

The LG indication system is electrical and it is composed by the following main components:

➢ UP/DN limit micro-switches	(6 couples, 2 for each leg)
➢ leg position lights, 3 green	(turned ON when the pertinent leg is extended and locked and located on the LH instrument panel)
➢ transition light, 1 red	(turned ON during transition phases)
➢ pump light, 1 amber	(GEAR PUMP ON caution amber light turned ON when the pump is electrically supplied)
➢ push to test (if installed)	(for landing gear red and green lights operational check)

The three green lights illuminate only when the respective gear is “down-locked”; the red light indicates the gear is in transit “up” or “down” and the amber caution light GEAR PUMP ON indicates that the pump is electrically supplied.

The red transition light extinguishes only when all the three gear legs are “down-locked” or they are “up” while the amber caution light extinguishes only when the electrical pump is “off”.

The Up/Down limit switches control the LG lights lighting and pump operation on the basis of LG configuration set by the pilot through the LG control knob.

A “push to test” button is used to check that the landing gear position lights are operating.

A warning horn alerts the pilot when the LG control knob is in UP position and at least one of the two throttle levers and/or flaps are respectively set to idle and to LAND position.

During emergency extension, LG position lights work as per normal extension mode: for this reason the LG control knob must be set on DOWN position before starting the emergency procedure.

IMPORTANT

After each emergency landing gear extension, apply the restoration procedure described in the AMM.

INTENTIONALLY LEFT BLANK

10. BRAKES

The A/C is provided with an independent hydraulically actuated brake system for each main wheel. A master cylinder is attached to each pilot/co-pilot's rudder pedal: see schematic below.

Hydraulic pressure, applied via the master cylinders, enters the brake via lines connected to an inlet fitting on the wheel brake caliper.

A parking brake valve, mounted in correspondence of the cabin floor and operated by a knob on the cockpit central pedestal, intercepts the hydraulic lines, once the system is pressurized, to hold the brake assemblies linings tightened round the main wheels brake discs.

Brakes can be operated from both pilot's and co-pilot's pedals: a single vented oil reservoir feeds the pilot side master cylinders which are connected, via hoses, with the co-pilot's side ones.

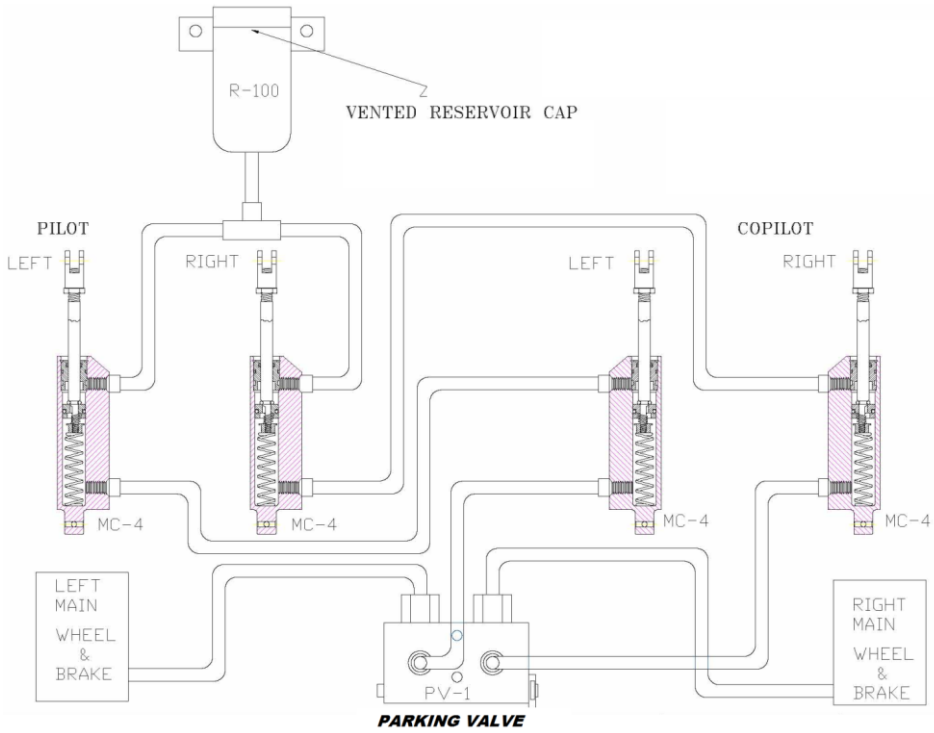

Figure 14. Brake system schematic

NOTE

On the ground, when a pedal is pushed to steer the airplane, do not operate the opposite toe brake until the pedals are back aligned again. This prevents pedals mechanism from being damaged.

11. VENTILATION

If required, pilot allows for ram-air entering the cabin via the two outlet ports respectively located on the left and right side of the instruments panel. Other two ram-air ventilation outlets are located on the cabin head, in the passengers' zone.

12. CABIN HEAT

The cabin heating system utilizes hot air coming from engines heat exchangers: here cold ram-air is warmed by engine exhaust gases and then it is routed to the heating system hoses.

The cabin heat control knobs are positioned on the lower side of the LH instrument panel; when knobs are fully pulled, cabin receives maximum hot air.

Left knob controls the warm air from LH engine heat exchanger, right knob controls the warm air from RH engine heat exchanger.

Crew heating system outlet ports are located on the cabin floor, near the pedestal; for passengers zone it is provided an outlet port on the cabin head.

Windshield defrost is operated via a knob positioned on the pedestal: when knob is pulled the hot air flow for crew heating is deviated to the windshield.

13. SEATS AND SAFETY BELTS

In correspondence of the seats, three fitting points safety belts are provided; belt adjustment is via the sliding buckle located on the belt metal hook.

Seats are built with light alloy tube structure and synthetic material cushioning. It is possible to perform following seat adjustments:

Horizontal – pulling the lower front lever and sliding the seat

Vertical – operating the lever located on the outward seat side

Seat back inclination – unlocking it via the lateral knob

These adjustments ensure the crew and passengers comfort.

14. DOORS

The cabin main door is located forward, on the left side of the fuselage while the emergency exit (passenger door) is located aft, on the right side of the fuselage.

On the top of the cabin it is located the ditching emergency exit: see figure below.

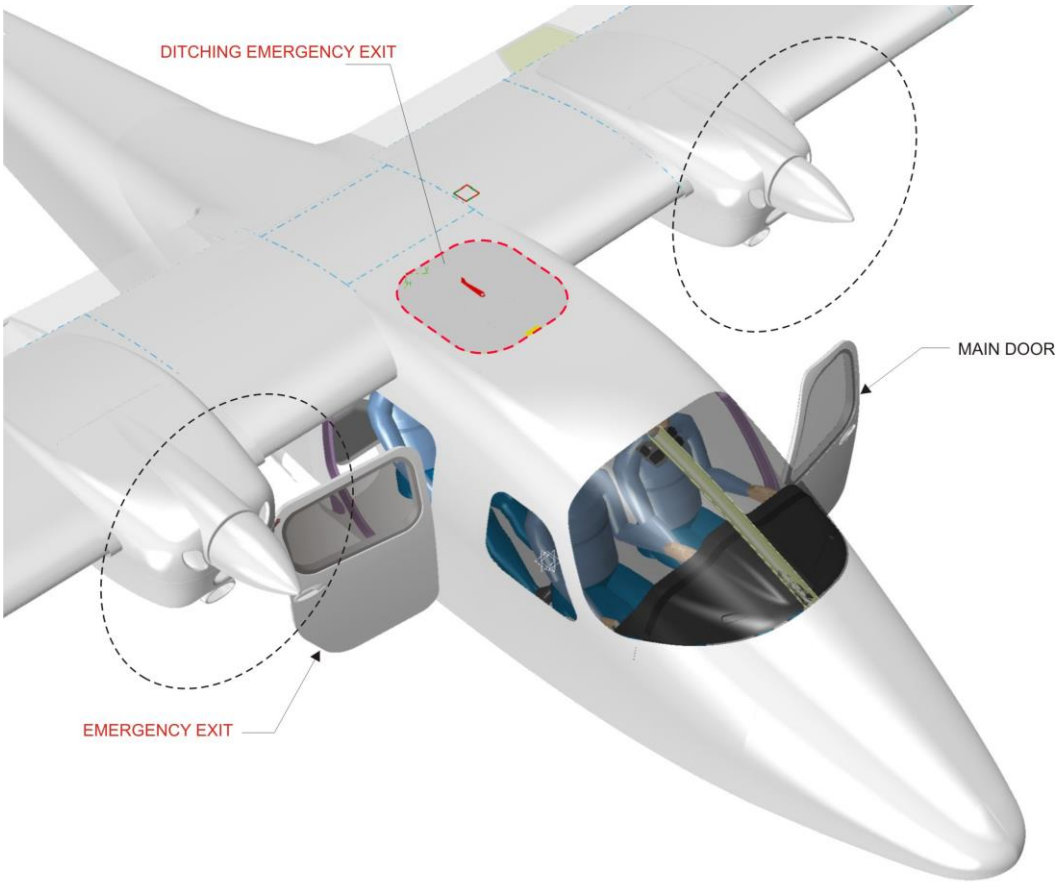

Figure 15. Doors location

Being the main door located in correspondence of the propeller disc, its operation is limited to the engine shut-down condition.

In fact, in order to prevent crew injuries, an electro-mechanical device locks the door latch when left engine runs. A pressure switch senses engine oil pressure and allows for electrical supply to a solenoid which engages the door lock mechanism.

This prevents the latch opening when left engine runs but, if needed, the device can be also manually by-passed operating either from the door inside panel or

from outside. Instructions are reported on the placards near the by-pass lever, located in correspondence of the latch: to unlock it is necessary to push and hold the red tab down, after that the door can be opened operating the handle.

After engine shut-down, the pressure drop can have a certain delay, preventing the door from being opened by normal means: do not force the handle but operate the override system above mentioned.

In any case, the electric lock becomes disengaged after a complete loss of the electric power.

Two switches engage respectively when the door and the latch are closed. Should one or both switches be released, the MAIN DOOR OPEN warning light is turned ON.

The emergency exit is fitted with the same safety device: in this case the pressure switch allowing for solenoid operation is activated from right engine oil pressure line; should be the door “open” or “closed and unlocked”, the REAR DOOR OPEN warning light is turned ON.

Any voluntary operation of the manual by-pass solenoid lock causes related door warning light is turned on.

The ditching emergency exit is manually operated turning the handle and pushing outward the door.

The yellow fluorescent painted handle, which can be operated also from outside, is fitted with a safety wire assuring removal effortlessness. When the door is open, it stays connected to the fuselage by means of two cables which allow for door opening forward.

15. BAGGAGE COMPARTMENT

The baggage compartment is located behind the passengers’ seats. The baggage must be uniformly distributed on the floor and the weight cannot overcome 80kg. Make sure that the baggage is secured before the flight.

INTENTIONALLY LEFT BLANK

INTENTIONALLY LEFT BLANK

16. PLACARDS

In addition to the limitation placards reported on Section 2, following placards are installed on the aircraft.

NOTE

Additionally, nearby the placards listed below (English language), directly-translated placards in the language of the country in which the airplane is registered can be installed, when required by the specific NAA.

Description	Placard	Place
ELT equipment location		Baggage compartment, right side
First Aid Kit location		Baggage compartment, aft cover panel
Fire extinguisher location		Cockpit floor, pilot side
Emergency gear extension compartment location		Removable cap

Description	Placard	Place
Emergency gear extension instructions		Emergency distributors compartment
Alternate static port location		Central pedestal, left side
Alternate static port operating instructions	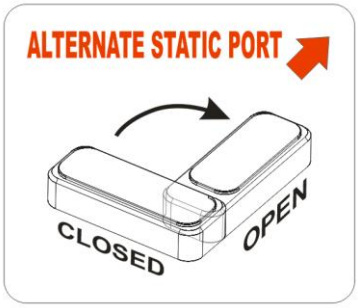	Central pedestal, right side
Static ports location	**STATIC PORT** **KEEP CLEAN**	Static ports: fuselage - both sides
Battery compartment location		Fuselage tail, left side
EXT power connection: socket schematic and instructions	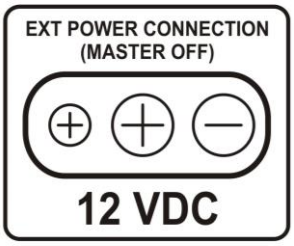	Fuselage tail, left side

Description	Placard	Place
Landing gear hydraulic accumulator: low pressure limit	EMERGENCY OIL TANK PRESS LOW PRESSURE LIMIT 20 BAR	LG hydraulic compartment cap (fuselage tail, left side)
LG hydraulic compartment location	LANDING GEAR HYDRAULIC COMPARTMENT	Fuselage tail, left side, in correspondence of LG hydraulic compartment cap
Towing limitations	CAUTION TOWING MAXIMUM TURNING ANGLE: 20° EITHER SIDE OF CENTER	Nose LG forward door
Stabilator excursion range	5° 0° 16°	Fuselage tail, left side, in correspondence of the stabilator leading edge
Aircraft grounding	! CONNECT THE AIRCRAFT TO ELECTRICAL GROUND BEFORE REFUELING !	Close to the fuel filler cap
Engine coolant expansion tank location	COOLANT	Engine nacelle top side

Description	Placard	Place
Steel boards: a/c identification marks	**(Sample)**	Fuselage tail, left side
Main LG tires inflation pressure values		MLG leg, LH and RH
Nose LG tire inflation pressure values		Nose LG fork

INTENTIONALLY LEFT BLANK

INTENTIONALLY LEFT BLANK

17. INSTRUMENTS PANEL

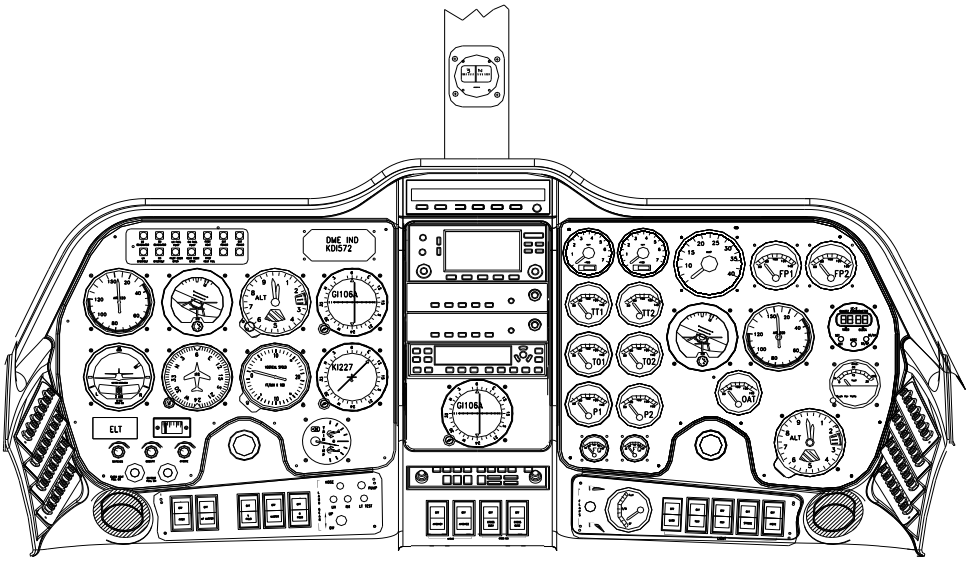

Figure 16. – Instruments panel (typical layout)

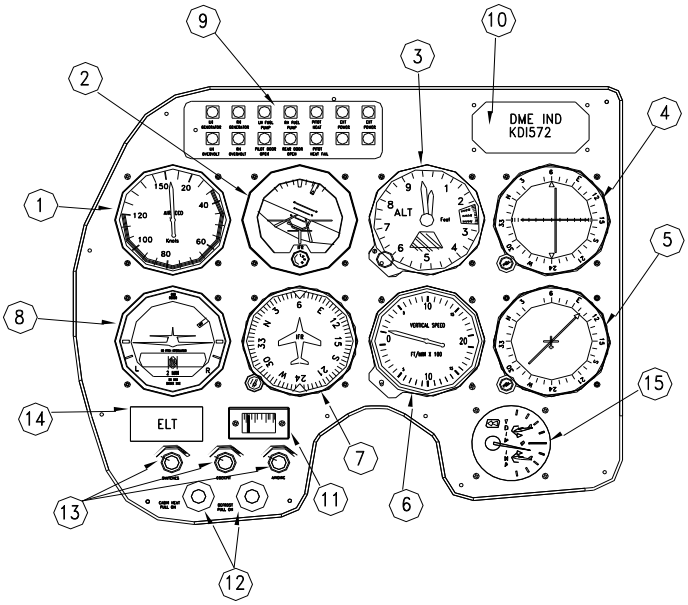

Tab 1

nr	DESCRIPTION
1	Airspeed indicator
2	Attitutude Indicator
3	Altimeter
4	VOR/ILS Indicator
5	ADF Indicator (Kit B)
6	Vertical Speed Indicator
7	Directional Gyro Indicator
8	Turn Coordinator
9	Annunciator Panel
10	DME Indicator (Kit B)
11	Directional Trim Indicator
12	Cabin Heat / Defrost
13	Dimmers
14	ELT Control Panel
15	Longitudinal Trim Indicator

Figure 17. – LH Instruments panel (typical layout)

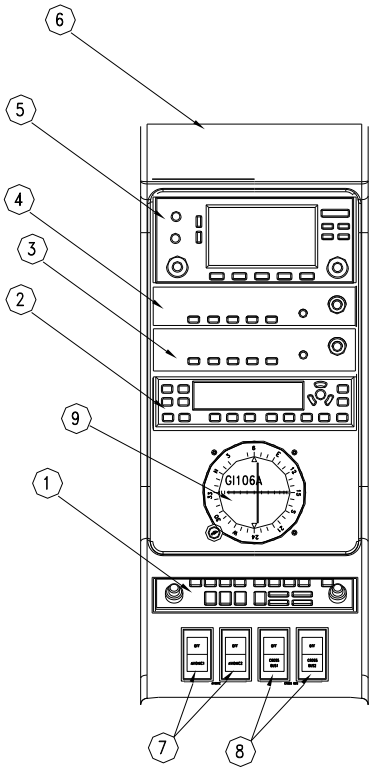

Tab 2

nr	DESCRIPTION
1	Audio Panel
2	Transponder
3	ADF (Kit B)
4	COMM/NAV SL30 (Kit A)
5	GPS/NAV/COMM GNS 430
6	Available
7	Avionic Switches
8	Cross Bus Switches
9	VOR/ILS Indicator

Figure 18. – Central instruments panel (typical layout)

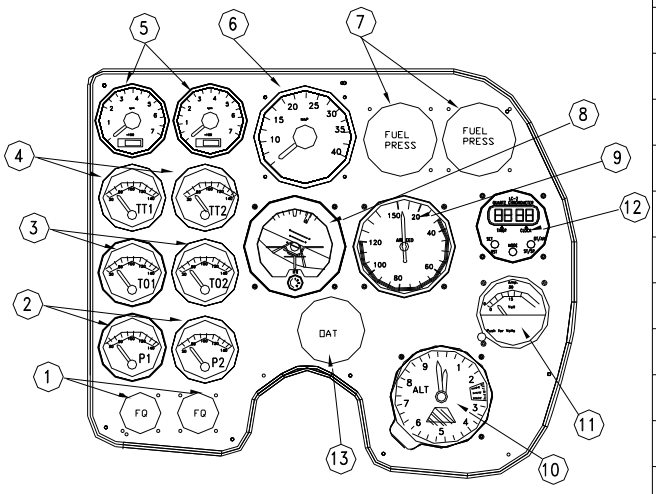

Tab 3

nr	DESCRIPTION
1	Fuel Quantity Indicators
2	Oil Pressure Indicators
3	Oil Temperatures Indicators
4	CHT Indicators
5	RPM Indicators
6	MAP Indicator (DUAL)
7	Fuel Pressure Indicators
8	2nd Attitude Indicator (Kit C)
9	2nd Airspeed Indicator (Kit C)
10	2nd Altimeter (Kit C)
11	Volt/Amper meter
12	Chronometer
13	OAT Indicator

Figure 19. – RH Instruments panel (typical layout)

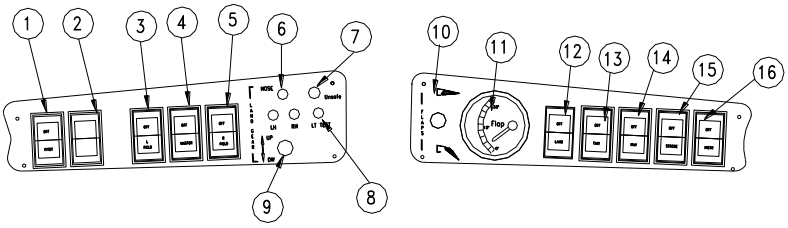

Tab 4

nr	DESCRIPTION
1	Pitot Heating Switch
2	Available
3	LH Field
4	Battery Master Switch
5	RH Field
6	Landing Gear lights
7	Unsafe Light
8	Light Test
9	Landing Gear lever

nr	DESCRIPTION
10	Flap Control
11	Flap Indicator
12	Landing Light Switch
13	Taxi Lights Switch
14	Position Lights Switch
15	Strobe Lights Switch
16	Instrument Lights Switch

Figure 20. – Switches panels

18. ELECTRICAL SYSTEM

Primary DC power is provided by two engine-driven generators which, during normal operations, operate in parallel.

Each generator is rated at 14,2-14,8 Vdc, 40 Amp, and it is fitted with an integrated regulator, which acts to maintain a constant output voltage, and with an automatic overvoltage device protecting the circuits and the electric components from an excessive voltage caused by generator failures.

The power rating of the each generator is such that if one generator fails the other one can still supply the airplane equipment to maintain flight safety.

Secondary DC power is provided by a battery (lead type - Gill Teledyne G35, 12 V, 38-Ah in 20h run time) and an external DC power source can be connected to the aircraft DC distribution system.

On the instruments panel, right side, it is installed a voltmeter/ammeter. The ammeter section can indicate the current supplied by either left or right generator switching a dedicated selector.

There are five different busses (make reference to Figure 11):

- Battery bus
- LH Generator bus
- RH Generator bus
- LH Avionic bus
- RH Avionic bus

The distribution system operates as a single bus with power being supplied by the battery and both generators but it is possible to separate the left busses from the right busses when required by means of the Cross Bus switches.

All electrical loads are divided among the five busses on the basis of their importance and required power: equipment with duplicate functions are connected to separate busses.

The Battery bus, which supplies the most important loads, is energized from three sources: the battery and both generators. This allows the bus for remaining active also in case of two independent faults in the supply paths.

The following loads are connected to the battery bus:

Battery Bus
Audio Panel
VHF COMM 1
NAV 1
GPS
LH and RH Fuel electrical pump
LH and RH Fuel pressure
LH and RH Fuel quantity
LH and RH oil pressure
LH and RH oil temperature
LH and RH CHT
LH and RH RPM indicator
LH Attitude indicator
Cabin lights
Cockpit lights
Switches built-in lights
Avionics lights
Annunciator Panel
Strobe lights
Flaps
Doors pressure switches
Engine hour meter (2 units)
OAT
Turn coordinator
LG hydraulic pump
LG indicating & control system
LH and RH Fire detector
12V cabin electrical power sockets (2 units)

In addition, directly on the battery, the following devices are connected:

• Emergency back-up attitude indicator (RH attitude indicator – usually supplied from RH generator bus), when installed;
• Emergency Light
• Chronometer

The first two devices are controlled by the pertinent switches located on the LH breakers rack.

The other loads are so divided among following busses:

LH GEN Bus	LH Avionic Bus
Pitot heat	DME
Landing light	Transponder
Taxi light	Encoder altimeter

RH GEN Bus	RH Avionic Bus
NAV lights	ADF
Rudder trim	COM 2
Stall warning	NAV 2
RH attitude indicator	A/P (*)
	A/P Pitch Trim (*)

(*) if installed

On the central pedestal (see Figure below) there are seven switches disposed on two rows: on the first row there is the MASTER SWITCH which allows for connecting, through the battery relay, the battery to the battery bus.

LH and RH FIELD switches control the pertinent generator: setting the switch to OFF puts the pertinent generator off-line.

In correspondence of the second row there are 4 switches LH/RH AVIONIC and LH/ RH CROSS BUS.

Figure 21. Central pedestal switches console

The first two allow, through a relay, for cutting off the power supply to the pertinent avionic bus.

The second ones allow, through a relay, for realizing the parallel connection between the pertinent generator bus and the battery bus. Setting these ones to OFF, the pertinent generator bus (and related avionic bus supplied) is separated from the battery bus and from opposite generator bus.

When both generators are correctly operating and all above mentioned switches are in ON position, all the busses are connected to the generators.

The ignition switches, two for each engine and grouped on the over head panel, are instead independent from the airplane electrical system (generation and distribution); they only control and open the engine electrical circuit

WARNING

If ignition switches are turned ON, a propeller movement can cause the engine starting with consequent hazard for people nearby.

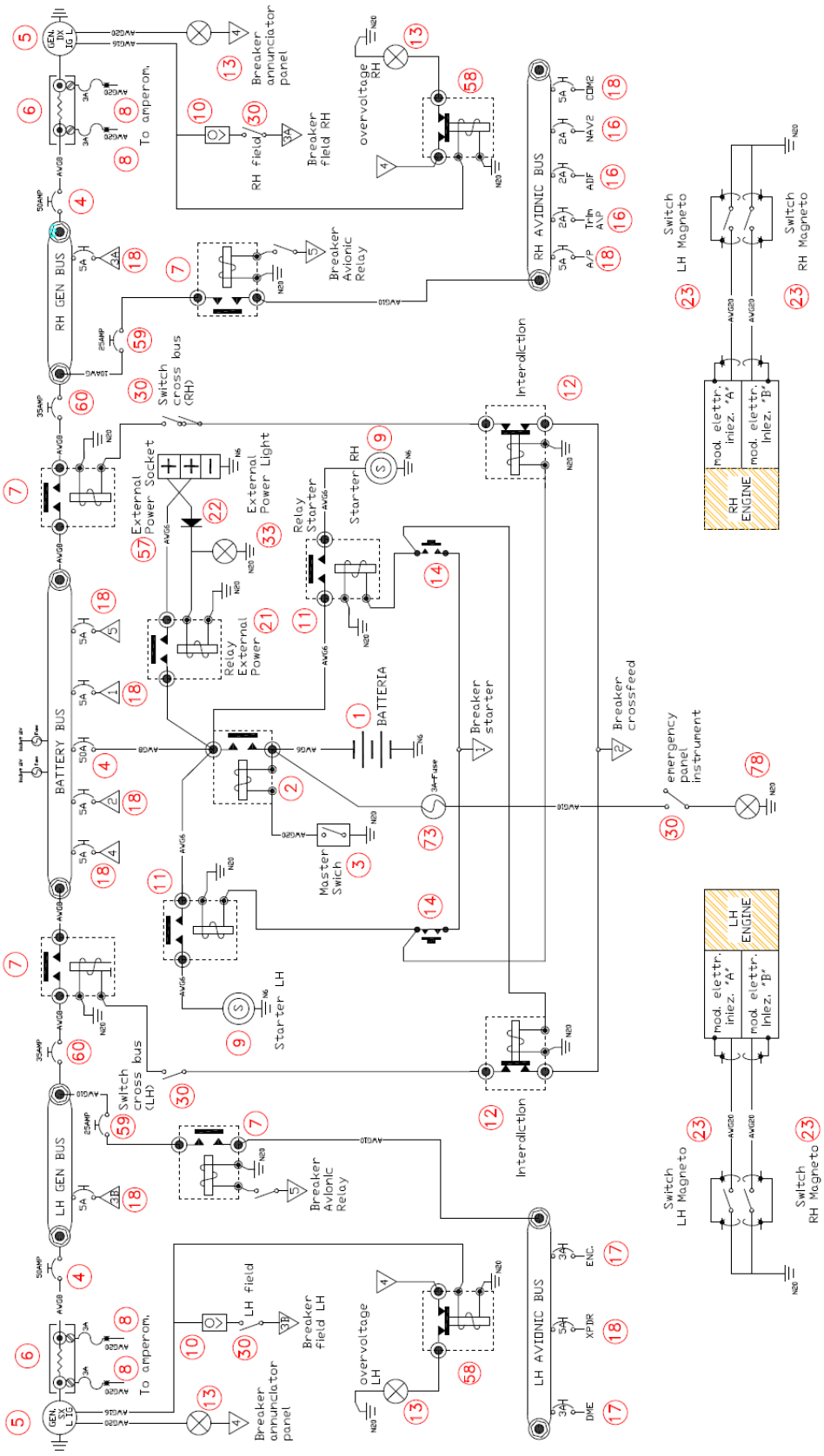

Figure 22. – Electrical system schematic

SECTION 8 – AIRCRAFT CARE and MAINTENANCE

INDEX

1. Introduction 3
2. Inspection intervals 3
3. Aircraft changes or repairs 3

4. Maintenance 4
   4.1. Refuelling 4
   4.2. Oil level control 4
   4.3. Landing gear tires pressure control 5

5. Ground towing, parking and mooring 6
   5.1. Towing 6
   5.2. Parking 6
   5.3. Mooring 7

6. Cleaning 8
   6.1. Windows 8
   6.2. External surfaces 8
   6.1 Propeller 8
   6.2 Engine 8
   6.3 Internal surfaces 9

7. Ice removal 9

INTENTIONALLY LEFT BLANK

1. INTRODUCTION

This Section deals with main care and maintenance operations for ***P2006T***.

Refer to Aircraft Maintenance Manual to establish the controls / inspections / maintenance tasks (scheduled and unscheduled) to be performed.

2. INSPECTION INTERVALS

Scheduled inspections must be performed in accordance with the instructions addressed on the Aircraft Maintenance Manual. Independently from the aircraft flight hours, an annual inspection has to be performed.

The first scheduled engine inspection must be carried out after first 3/6 hours. All required inspections are reported in the Aircraft Maintenance Manual.

As far as the scheduled/unscheduled engine maintenance is concerned, refer to the engine manufacturer Maintenance Manual.

CAUTION

Unscheduled inspections/maintenance tasks are necessary when one or more of following conditions occur:

1. *Emergency landing*
2. *Breaking / damage of propeller (or in case of simple impact)*
3. *Engine fire*
4. *Lights damage*
5. *Any type of damage or failure*

3. AIRCRAFT CHANGES OR REPAIRS

Aircraft changes or repairs must be performed in accordance with Aircraft Maintenance Manual and only by TECNAM authorized personnel.

4. MAINTENANCE

4.1. REFUELLING

- *Do not perform aircraft refuelling near flames, sparks or similar.*
- *Avoid fuel contact with the skin: a skin corrosion could occur.*
- *Make sure that a fire extinguisher is available nearby during refuelling operations.*

WARNING

- *Make sure that overall aircraft instrumentation is turned OFF before performing the refuelling.*
- *Do not operate switches and/or pushbuttons inside the aircraft during refuelling operation; make sure that crew left the aircraft before performing refuelling.*
- *Make sure that the aircraft is electrically connected to the ground.*

4.2. OIL LEVEL CONTROL

1. Open the inspection cap on the engine nacelle
2. Prior to oil check, switch off both ignitions circuits and turn the propeller by hand in direction of engine rotation several times to pump oil from the engine into the oil tank, or let the engine idle for 1 minute. This process is finished when air is returning back to the oil tank and can be noticed by a murmur from the open oil tank.
3. Clean the dipstick and soak it in the reservoir
4. Remove dipstick and read oil level
5. If required, replenish oil: oil level should be between max. and min. mark of the oil level dipstick

1. Close the inspection cap
2. Repeat the procedure for the other engine

4.3. LANDING GEAR TIRES PRESSURE CONTROL

1. Remove wheel dust cover (on main LG wheels)
2. Unscrew the tire cap
3. Connect a gauge
4. Read the pressure value
5. If required, rectify the pressure (nose tire 1.7 Bar / 24 Psi, main landing gear tires 2,3 Bar / 33 Psi)
6. Fit the tire cap
7. Install wheel dust cover (on main LG wheels)

5. GROUND TOWING, PARKING AND MOORING

5.1. TOWING

CAUTION

When the a/c is moved on the ground, either manually or by towing, the Master Switch must be turned ON until the a/c is parked.

To tow the aircraft it is necessary to use a metal stiff bar connected to the nose gear.

WARNING

Do not turn nose wheel above 20° either side of center: greater steering angles can damage the wheel stop. The tow bar must be removed before engines starting.

5.2. PARKING

General

Under normal weather conditions, the airplane may be parked and headed in a direction that will facilitate servicing without regard to prevailing winds. Ensure that it is sufficiently protected against adverse weather conditions and present no danger to other aircraft.

Procedure

1. Position airplane on levelled surface, headed into the prevailing wind, if practical.
2. Engage parking brake
3. Install control locks
4. Secure pilot control wheel by wrapping the seat belt around it

NOTE:

Do not engage the parking brakes at low ambient temperature, when an accumulation of moisture may cause the brakes to freeze, or when they become hot from severe use. In this case use wheel chocks.

In case of long time parking or overnight parking, it is recommended to moor the a/c as shown on Para. 5.3.

CAUTION

Mooring is strongly recommended when the wind is more than 15 knots and the a/c is completely refuelled.

5.3. MOORING

The aircraft is moored to insure its immovability, protection, and security under various weather conditions.

CAUTION

Mooring is strongly recommended when the wind is more than 15 knots and the a/c is completely refuelled.

Procedure

1. Position airplane on levelled surface and headed into the prevailing wind, if practical
2. Center nose wheel and engage parking brake and/or use the wheel chocks

NOTE:

Do not engage the parking brakes at low ambient temperature, when an accumulation of moisture may cause the brakes to freeze, or when they become hot from severe use. In these cases use wheel chocks.

3. Secure pilot control wheel by wrapping the seat belt around it
4. Assure that flaps are retracted
5. Electrically ground airplane, by connecting ground cable to the engine muffle
6. Install control locks
7. Install protective plugs
8. Close and lock cabin doors.
9. Secure tie-down cables to the nose gear leg (in correspondence of the wheel fork) and to the wings and tail cone tie-down rings at approximately 45 degree with respect to the ground. (Refer to following figures)

NOTE:

Additional preparation for high winds includes tie-down ropes from the main landing gear forks employment.

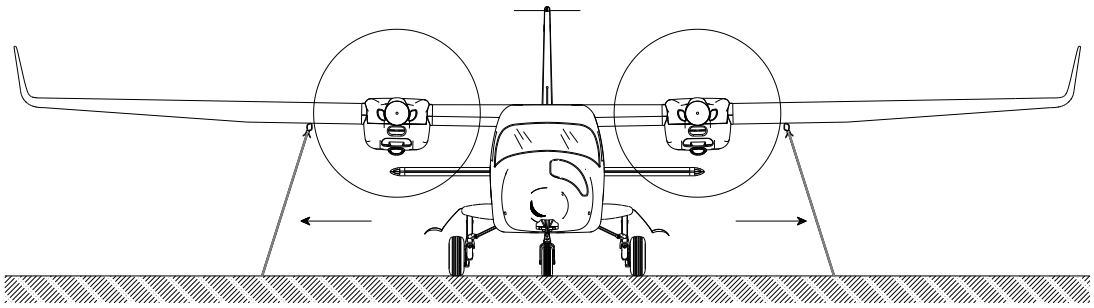

Mooring – front view

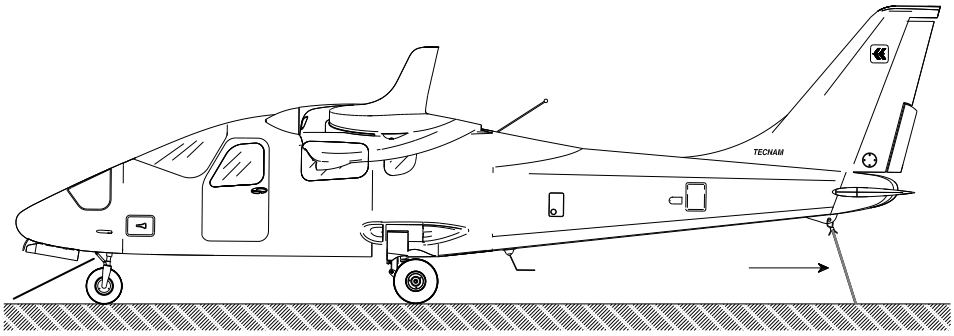

Mooring – side view

6. CLEANING

CAUTION

Aircraft surface must be kept clean to ensure expected flight performance. Excessively dirty surfaces can affect normal flight conditions.

6.1. WINDOWS

For windows cleaning, it is allowed the use of acrylic products employed for glass and Plexiglas surfaces cleaning.

6.2. EXTERNAL SURFACES

Aircraft surface is cleaned with soapy water; they are not allowed solvents or alcohol based products. Died insects must be removed using hot water.
It is advisable to avoid outside aircraft parking for long periods; it is always convenient to keep the aircraft in the hangar.

6.1 PROPELLER

To preserve its functionality avoiding wear and corrosion, the propeller manufacturer uses, for external surface painting, an acrylic paint which is resistant to all solvents. In any case it is advisable to clean the propeller using exclusively soapy water.

6.2 ENGINE

Engine cleaning is part of the scheduled maintenance. Refer to the engine manufacturer Maintenance Manual for operating and for planning its cleaning.

6.3 INTERNAL SURFACES

Interiors must be cleaned with a rate of 3 to 6 months. Any object present in the cabin (like pens, lost property, maps etc) must be removed.
The instrumentation as a whole must be cleaned with a humid cloth; plastic surfaces can be cleaned with suitable products.
For parts not easily accessible, perform cleaning with a small brush; seats must be cleaned with a humid cloth.

7. ICE REMOVAL

Anti icing products are not allowed. To remove ice, tow the aircraft in the hangar and operate with a soft brush or a humid cloth.

INTENTIONALLY LEFT BLANK

SECTION 9 – SUPPLEMENTS

1. INTRODUCTION

This Section concerns the supplemental manuals of additional (or optional) instrumentation equipping the ***P2006T***.

2. SUPPLEMENTS LISTS

Aircraft S/N: _____ Registration marks: _____ Date: _____

SUPPLEMENTS LIST							
Sup. No.	Title	Rev. No.	Date	Applicablity		Applied	
				A	G	Yes	No
A1	Garmin GNS-430W Gps/VHF Comm/Nav	0		X			
A2	Garmin SL30 VHF Comm/Nav	0		X			
A3	Garmin GMA 340 Audio Panel	0		X			
A4	Garmin GTX 328Mode S Transponder	0		X			
A5	Bendix-King Honeywell KR 87 ADF System	0		X			
A6	Bendix-King Honeywell KN 63 DME System	0		X			
A7	KCS 55A Compass System	0		X			
A8	Garmin GNS-530W Gps/VHF Comm/Nav	0		X			
A9	Garmin GTX 330 Mode S Transponder	0		X			
A10	Garmin GMA 347 Audio Panel	0		X			
A11	Becker BXP 6401-2-(01) Mode S transponder	0		X			
A12	S-TEC Fifty Five X Autopilot	0		X			
A13B	GTN 650/750 equipment	1		X			
A14	Engine starting battery	0		X			
A15	Power supply from built-in generators	0		X			
A16	AFM Supplement for CIS countries operators	0		X			
A17	Brazilian AFMS	0		X			
A18	Chinese AFMS	0		X			
A19	Increased MTOW - 1230 KG (MOD 2006/015)	2		X			
A20	Increased Vle/Vlo	0		X			
A21	South African AFM	0		X			
A22	Argentine AFM	0		X	X		
A23	Ukrainian AFM	0		X	X		

Aircraft S/N: _____ Registration marks: _____ Date: _____

SUPPLEMENTS LIST

Sup. No.	Title	Rev. No.	Date	Applicablity		Applied	
				A	G	Yes	No
A24	SMP for Analogic Configuration	1		X			
A25	Alternators with 70A	1		X			
A26	Mogas MG95 IS 2796:2008	0		X	X		
A27	Garmin GMA 345 Audio Panel	0		X			
A28	GARMIN GTX345R Transponder	0		X			
G1	Garmin G950 IFDS	6			X		
G2	S-TEC Fifty Five X Autopilot	1			X		
G3	Bendix-King Honeywell KR 87 ADF System for GARMIN G950	0			X		
G4	Bendix-King Honeywell KN 63 DME System for GARMIN Integrated Avionics Suite	1			X		
G5	Engine starting battery	0			X		
G6	Power supply from built-in generators	0			X		
G7	AFM Supplement for CIS countries operators	0			X		
G8	Brazilian AFMS	0			X		
G9	Chinese AFMS	0			X		
G10	Increased MTOW - 1230 KG (MOD 2006/015)	1			X		
G11	Increased Vle/Vlo	0			X		
G12	South African AFM	0			X		
G13	Alternators with 70A	2			X		
G14	SMP for Garmin G950 Avionics	2			X		
G15	Japanese AFM	0		X	X		
G16	MD302 Alternative Stand-By Instrument	1			X		
G17	Stormscope	1			X		
G18	Cancelled						
G19	G1000 NXi, Increased MTOW, Increased V_{LE}/V_{LO} and MD302	5			X		

Aircraft S/N: _____ Registration marks: _____ Date: _____

SUPPLEMENTS LIST							
Sup. No.	Title	Rev. No.	Date	Applicablity		Applied	
				A	G	Yes	No
G20	GARMIN GTX345R Transponder	1			X		
G21	Becker 3500 ADF for GARMIN NXi	0			X		
G22	GARMIN GTS800 TAS for GARMIN NXi	0			X		
G23	SMP Configuration for Garmin NXi Avionics Suite	3			X		
G24	TABI-1800	1		X	X		
G25	Phase One 190MP Aerial System	1		X	X		
G26	LMS-Q680I and Phase One 4-band Camera Installation	0		X	X		
G27	Installation of Phase One Camera in tail cone hatch	0		X	X		

SUPPLEMENT NO. G1

GARMIN G950 IFDS

Record of Revisions

Rev	Revised page	Description of Revision	Tecnam Approval			EASA Approval or Under DOA Privileges
			DO	OoA	HDO	
0	-	See Note (*)				
1	S4-3,4	Amend General rec-ommendation	D. Ronca	C. Caruso	M. Oliva	Approved under the authority of DOA, ref. EASA.21J.335
	S4-23,24	Update procedures	D. Ronca	C. Caruso	M. Oliva	
2	S4-1 and S4-31 thru 38	RNAV capabilities	A. Sabino	C. Caruso	M. Oliva	
3	S4-3,13,20, 21,23,24,29	Amended procedures	A. Sabino	C. Caruso	M. Oliva	
4	S4-27 to 29	Amended procedures	A. Sabino	D. Ronca	M. Oliva	Approved under the authority of DOA, ref. EASA.21J.335 (MOD2006/345.181120)
5	S3-1	Index Updated	A. Glorioso (OJT) G. Valentino	D. Ronca	M. Oliva	Approved under the authority of DOA, ref. EASA.21J.335 (MOD2006/375.190826)
	S3-33	Electrical pitch trim control failure procedures				
6	G1-1, 2	Update Cover and LOEP	G. Valentino	D. Ronca	M. Oliva	Approved under the authority of DOA, ref. EASA.21J.335 (MOD2006/382.200129)
	S4-9, 10, 20, 21	Typo errors Update “Engine starting” checklist				

Note (*): this Supplement has been originally issued under EASA Major Design Change Approval no. 10029633 (dated 8 April 2010)

LOEP

	Pages	Revision
Cover pages	G1-3 thru 16	Rev 0
	G1-1 thus 2	Rev 6
Section S2	7,8, 13,14,21,22,29,30	Rev 0
Section S3	2 thru 32, 34 thus 62	Rev 0
	1, 33	Rev 5
Section S4	2, 5 thru 8, 11, 12, 14 thru 19,22, 25, 26, 30	Rev 0
	4	Rev 1
	1, 31 thru 38	Rev 2
	3,13,23,24	Rev 3
	27 to 29	Rev 4
	9, 10, 20, 21	Rev 6
Section S7	37 thru 46	Rev 0

INTRODUCTION

This section contains supplemental information to operate, in a safe and efficient manner, the aircraft when equipped with Garmin G950 Integrated Flight Deck System (Design Change MOD 2006/002).

The information contained herein supplements or supersedes the basic Aircraft Flight Manual: detailed instructions are provided to allow the owner for replacing the AFM pages containing information amended as per the Design Change in subject.

It is the owner's responsibility to replace the mentioned pages in the AFM in accordance with the instructions herein addressed section by section.

CAUTION

Garmin G950 Pilot's Guide for Tecnam P2006T (P/N 190-01146-XX) – last issue - must be carried onboard the airplane at all times.

Supplement G1: pages replacement instructions

SECTION 1 - GENERAL

See Basic AFM - Section 1

Supplement G1: pages replacement instructions

SECTION 2 - LIMITATIONS

Apply following pages replacement procedure:

Supplement G1 – LIMITATIONS page		Basic AFM Section 2 page
S2-7	**REPLACES**	2-7
S2-8	**REPLACES**	2-8
S2-13	**REPLACES**	2-13
S2-14	**REPLACES**	2-14
S2-21	**REPLACES**	2-21
S2-22	**REPLACES**	2-22
S2-29	**REPLACES**	2-29
S2-30	**REPLACES**	2-30

INTENTIONALLY LEFT BLANK

3 Airspeed indicator markings

The Airspeed Indicator displays airspeed on a rolling number gauge using a moving tape.

The airspeed is displayed inside the black pointer. The pointer remains black until reaching never-exceed speed (V_{NE}), at which point it turns red.

Airspeed indicator markings and their colour code are explained in the following table.

MARKING	KIAS	EXPLANATION
White band	**53-93**	Lower limit is V_{SO}, upper limit is the maximum allowable speed with flaps extended in *FULL* position.
Red line	**62**	Minimum aircraft control speed with one engine inoperative and flaps set to T.O.
Green band	**66-135**	Normal aircraft operating range (lower limit is V_{S1}, stall speed in "clean" configuration, and upper limit is the maximum structural cruise speed V_{NO}).
Blue line	**80**	Best rate-of-climb speed with one engine inoperative.
Yellow band	**135-167**	Speed range where manoeuvres must be conducted with caution and only in smooth air.
Red line	**167**	Maximum speed for all operations.

INTENTIONALLY LEFT IN BLANK

13 Warning/caution alerts and safe operating annunciations

Following table addresses the warning and caution alerts and safe operating annunciations shown (unless differently specified) on the Annunciation Window:

Warning alert (RED)	Cause
L BUS VOLT HIGH	LH electric system overvoltage
R BUS VOLT HIGH	RH electric system overvoltage
L COOLANT LOW	Left engine - coolant liquid low level
L COOLANT LOW	Right engine - coolant liquid low level
PILOT DR OPEN	Main door open and/or unlocked
REAR DR OPEN	Rear door open and/or unlocked
LH ENGINE FIRE	Left engine compartment: fire detected
RH ENGINE FIRE	Right engine compartment: fire detected
LG TRANSITION (warning light installed near the landing gear control lever)	One or more legs are in transition phase and/or the selected retracted/extended position is not yet reached.
Caution alert (AMBER)	**Cause**
L ALT FAIL	LH generator failure
R ALT FAIL	RH generator failure
PITOT HEAT	Pitot heating system failure/not activated
EXT POWER ON	External electrical supply connected
GEAR PUMP ON	LG pump electrically supplied
Safe operating annunciation (GREEN)	**Indication**
L FUEL PUMP ON	Left engine - electrical fuel pump ON
R FUEL PUMP ON	Right engine - electrical fuel pump ON
PITOT HEAT ON	Pitot heating system ON
LG Down & Locked (3 advisory lights, one for each leg, installed near the landing gear control lever)	Landing gear extended and locked

Aural means are provided by Garmin G950 System: a repeating tone is associated to the warning alerts and a single chime is associated to the caution alerts. Safe operating annunciations do not have any aural chime generated.

Make reference to Garmin G950 Pilot's Guide for P2006T, last issue, "Annunciations and alerts" (Appendix A).

21. LIMITATIONS PLACARDS

Hereinafter the placards, related to the operating limitations and installed on ***P2006T***, are reported.

21.1. SPEED LIMITATIONS

On the left side instrument panel, the following placards reporting the speed limitations are placed:

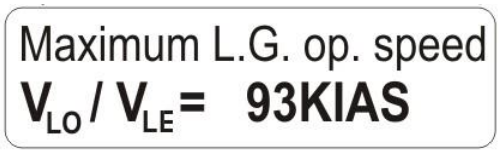

21.2. OPERATING LIMITATIONS

On the instrument panel, it is placed the following placard reminding the observance of aircraft operating limitations; make reference to Para. 22 for the list of equipment required on board to allow flight operations in VFR Day, VFR Night, IFR Day and IFR Night conditions.

This A/C can be operated only in normal category DAY-NIGHT-VFR-IFR (with required equipment) in non-icing conditions. All aerobatics manoeuvres including spinning are prohibited. For operational limitations refer to FLIGHT MANUAL

22. KINDS OF OPERATIONS EQUIPMENT LIST

This paragraph reports the KOEL table, concerning the equipment list required on board under CS-23 regulations to allow flight operations in VFR Day, VFR Night, IFR Day and IFR Night conditions.

Flight in VFR Day and Night, IFR Day and Night is permitted only if the prescribed equipment is installed and operational.

Additional equipment, or a different equipment list, for the intended operation may be required by national operational requirements and also depends on the route to be flown.

Equipment	VFR Day	VFR Night	IFR Day	IFR Night
Magnetic compass	●	●	●	●
GDU 1040 - Display Unit (2)	●	●	●	●
GIA 63W - Integrated Avionics Unit (2)	●	●	●	●
GDC 74A - Air Data Computer	●	●	●	●
GTP 59 - OAT sensor	●	●	●	●
GRS 77 - AHRS	●	●	●	●
GMU 44 - Magnetometer	●	●	●	●
GMA 1347 - Audio panel/Marker beacon	●	●	●	●
GTX 33 - Transponder	●	●	●	●
Standby Airspeed indicator	●	●	●	●
Standby Attitude indicator (electric)	●	●	●	●
StandbyAltimeter	●	●	●	●
Pitot heating system	●	●	●	●
Clock	●	●	●	●
Breakers panels	●	●	●	●
First Aid kit	●	●	●	●
Fire extinguisher	●	●	●	●
Fire detectors (2)	●	●	●	●
Instruments lights	●	●	●	●
Position lights	●	●	●	●
Landing light	●	●	●	●
Taxi light	●	●	●	●
Strobe lights	●	●	●	●
Torch		●	●	●
Cabin light		●	●	●
Cockpit lights		●	●	●
Emergency light	●	●	●	●
Volt-Ammeter	●	●	●	●
LG position and transition lights	●	●	●	●
ELT	●	●	●	●
Alternate static source	●	●	●	●
MAP indicator (dual)	●	●	●	●
RPM indicator (2)	●	●	●	●
Oil pressure indicator (2)	●	●	●	●
Oil temperature indicator (2)	●	●	●	●
CHT (2)	●	●	●	●
Fuel pressure indicator (2)	●	●	●	●
Fuel quantity indicator (2)	●	●	●	●
Longitudinal trim indicator	●	●	●	●
Rudder trim indicator	●	●	●	●
Flaps position indicator	●	●	●	●
Stall warning system	●	●	●	●
DME			●	●
ADF			●	●
	VFR Day	VFR Night	IFR Day	IFR Night

Supplement G1: pages replacement instructions

SECTION 3 - EMERGENCY PROCEDURES

Apply following page replacement procedure

Supplement G1 – EMERGENCY PROCEDURES pages replace
Basic AFM Section 3 as a whole

INTENTIONALLY LEFT IN BLANK

SECTION 3 – EMERGENCY PROCEDURES

INDEX

1. INTRODUCTION 3
1.1. Engine failure during takeoff run 3

2. Airplane alerts 6
2.1 Single alternator failure / overvoltage 7
2.2 Both alternators failure 8
2.3 Both alternators overvoltage 9
2.4 Failed door closure 10
2.5 Pitot heating system failure 11
2.6 Coolant liquid low level 12
2.7 Gear Pump failure 13
2.8 Engine fire 14
2.9 Loss of information displayed 15
2.10 Loss of airspeed information 15
2.10 Loss of attitude information 16
2.11 Loss of altitude information 16
2.12 Loss of vertical speed information 17
2.13 Loss of heading information 17
2.14 Display failure 19

3. ENGINE SECURING 21

4. POWERPLANT EMERGENCIES 23
4.1 Propeller overspeeding 23
4.2 CHT limit exceedance 24
4.3 Oil temperature limit exceedance 25
4.4 Oil pressure limits exceedance 26
4.5 Low fuel pressure 27

5. Other emergencies 29
5.1 Emergency descent 29
5.2 Total electrical failure 29
5.3 Static ports failure 30
5.4 Unintentional flight into icing conditions 31
5.5 Carburettor icing 32
5.6 Flaps control failure 33
5.7 Electrical pitch trim control failure 33

6 ONE ENGINE INOPERATIVE PROCEDURES 34
6.1 Characteristic airspeeds with one engine inoperative 35
6.2 Inflight engine restart 36
6.3 Engine failure during takeoff run 37
6.4 Engine failure during climb 39
6.5 Engine failure in flight 40
6.6 One engine inoperative landing 41

7 LANDING GEAR SYSTEM FAILURES....42
7.1 Emergency landing gear extension....42
7.2 Complete Gear up or nose gear up landing....43
7.3 Partial Main LG extension....45
7.4 Failed retraction....47
7.5 Unintentional landing gear extension....47

8 SMOKE AND FIRE OCCURRENCE....49
8.1 Engine fire on the ground....49
8.2 Engine fire during takeoff run....50
8.3 Engine fire in flight....52
8.4 Electrical smoke in cabin on the ground....52
8.5 Electrical smoke in cabin during flight....53

9 UNINTENTIONAL SPIN RECOVERY....55

10 LANDING EMERGENCIES....56
10.1 Landing without engine power....56
10.2 Landing with Nose landing gear tire deflated....58
10.3 Landing with a known main landing gear tire deflated....59
10.4 Landing without brakes....60

11 AIRCRAFT EVACUATION....61

12 DITCHING....62

1. INTRODUCTION

Section 3 includes checklists and detailed procedures for coping with various types of emergency conditions that could arise after a system failure.

Before operating the aircraft, the pilot should become thoroughly familiar with this manual and, in particular, with this Section. Further on a continued and appropriate training and self study should be done.

Two types of emergency procedures are hereby given.

a. "BOLD FACES" which must be known by heart by the pilot and executed, in the correct and complete sequence, immediately after the failure is detected and confirmed.
These procedures characters are boxed and highlighted:

1.1. ENGINE FAILURE DURING TAKEOFF RUN

BEFORE ROTATION: ABORT TAKE OFF

1.	**Throttle Lever**	***BOTH IDLE***
2.	**Rudder**	***Keep heading control***
3.	- -	
4.	- -	

b. "other procedures" which should be well theoretically known and mastered, but that can be executed entering and following step by step the AFM current section appropriate checklist.

Additionally operating the aircraft, the pilot should become thoroughly familiar with the Garmin G950 Pilot's Guide for Tecnam P2006T (P/N 190-01146-XX) – last issue - and, in particular, with the present AFM Section.

CAUTION

Garmin G950 Pilot's Guide for Tecnam P2006T (P/N 190-01146-XX) – last issue - must be carried onboard the airplane at all times.

WARNING

Garmin G950 has a very high degree of functional integrity. However, the pilot must recognize that providing monitoring and/or self-test capability for all conceivable system failures is not practical. Although unlikely, it may be possible for erroneous operation to occur without a fault indication shown by the G950. It is thus the responsibility of the pilot to detect such an occurrence by means of crosschecking with all redundant or correlated information available in the cockpit.

In any case, as a failure or abnormal behaviour is detected pilots should act as follows:

1. *Keep self-control and maintain aircraft flight attitude and parameters*
2. *Analyse the situation identifying, if required, the area for a possible emergency landing*
3. *Apply the pertinent procedure*
4. *Inform the Air Traffic Control as applicable*

NOTE

For the safe conduct of later flights, any anomaly and/or failure must be communicated to the National Authorities in charge, in order to put the aircraft in a fully operational and safe condition.

NOTE

*In this Chapter, following definitions apply**:***
***Land as soon as possible**: land without delay at the nearest suitable area at which a safe approach and landing is assured.*
***Land as soon as practical**: land at the nearest approved landing area where suitable repairs can be made.*

INTENTIONALLY LEFT BLANK

2. AIRPLANE ALERTS

Annunciation Window, located to the right of the Altimeter and Vertical Speed Indicator, supplies 16 alerts for warnings and cautions along with safe operating annunciations. The colours are as follows:

GREEN: to indicate that pertinent device is turned ON
AMBER: to indicate no-hazard situations which have to be considered and which require a proper crew action
RED: to indicate emergency conditions

Warning alert text is shown in red in the Annunciation Window and is accompanied by a continuous chime and a flashing WARNING Softkey annunciation. Selecting the WARNING Softkey acknowledges the presence of the warning alert and stops the aural chime.

Caution alert text is shown in yellow in the Annunciation Window and is accompanied by a single chime and a flashing CAUTION Softkey annunciation. Selecting the CAUTION Softkey acknowledges the presence of the caution alert. Caution voice alerts repeat three times or until acknowledged by selecting the CAUTION Softkey.

All aircraft annunciations can be displayed simultaneously in the Annunciation Window. A white horizontal line separates annunciations that are acknowledged from annunciations that are not yet acknowledged. Higher priority annunciations are displayed towards the top of the window.

In order to give a short description about the airplane alerts, text messages are displayed on the Alerts Window: pressing the ALERTS Softkey displays the Alerts Window, pressing the ALERTS Softkey a second time removes the Alerts Window from the display. When the Alerts Window is displayed, the FMS knob can be used to scroll through the alert message list.

2.1 SINGLE ALTERNATOR FAILURE / OVERVOLTAGE

Annunciation window	Alert window
L ALT FAIL	Lh Alternator

OR

R ALT FAIL	Rh Alternator

1. FIELD LH (or RH) *OFF*
2. FIELD LH (or RH) *ON*

If the LH (or RH) ALT caution stays displayed

3. FIELD LH (or RH) *OFF*
4. Avionic LH *OFF*
5. ADF *OFF*

NOTE *Switching OFF avionic LH and ADF will permit to shed non-essential electrical power.*
The battery and a single generator are able to supply the electrical power necessary for flight, but redundancy is lost.

If conditions permit:

NOTE *Switching CROSS BUS OFF will further reduce alternator load; the decision mainly depends on weather conditions.*

6. CROSS BUS LH (or RH) OFF

Equipment will be lost accordingly to the following table:

LH Gen Bus	LH Avionic Bus	RH Avionic Bus	RH Gen Bus
Pitot Heat	DME	ADF	NAV Lights
Landing Light	Transponder	COM 2	Rudder Trim
Taxi Light	A/P	NAV 2	Stall Warning
	A/P Pitch Trim	MFD	
		AHRS/ADC*	

** AHRS /ADC are fed from battery bus if Mod 2006/135 is embodied*

7. Land as soon as practicable

2.2 BOTH ALTERNATORS FAILURE

Annunciation window	Alert window
L ALT FAIL	Lh Alternator
R ALT FAIL	Rh Alternator

In event of both L and R ALT FAIL caution alerts displayed:

1. FIELD LH and RH *BOTH OFF*
2. FIELD LH and RH *BOTH ON*

If the LH (or RH) ALT caution stays displayed

1. Verify good ammeter indications on restored alternator
2. Refer to Single alternator failure / overvoltage drill (Para 2.1)

If both LH and RH ALT cautions stay displayed

3. FIELD LH and RH *BOTH OFF*
4. CROSS BUS LH and RH *BOTH OFF*

If engine starting battery modification is applied

5. EMERG BATT switch ON
6. **Land as soon as possible.**

If engine starting battery modification is not applied

5. **Land as soon as possible.**

Equipment will be lost accordingly to the following table:

LH Gen Bus	LH Avionic Bus	RH Avionic Bus	RH Gen Bus
Pitot Heat	DME	ADF	NAV Lights
Landing Light	Transponder	COM 2	Rudder Trim
Taxi Light	A/P	NAV 2	Stall Warning
	A/P Pitch Trim	MFD	
		AHRS/ADC*	

AHRS /ADC are fed from battery bus if Mod 2006/135 is embodied

NOTE *The battery can supply electrical power for at least 30 minutes.*

2.3 BOTH ALTERNATORS OVERVOLTAGE

Annunciation window	Alert window
L BUS VOLT HIGH	Lh overvoltage
R BUS VOLT HIGH	Rh overvoltage

In event of both L and R BUS VOLT HIGH warning alerts displayed:

1. FIELD LH and RH *BOTH OFF*
2. FIELD LH and RH *BOTH ON (one at a time)*

If the LH (or RH) BUS VOLT HIGH warning is still displayed

3. Verify good ammeter indications on restored alternator
4. Refer to Single alternator failure / overvoltage drill (Para 2.1)

If both LH and RH BUS VOLT HIGH warning are still displayed

3. CROSS BUS LH and RH BOTH OFF
4. FIELD LH and RH BOTH OFF
5. FIELD LH and RH BOTH ON (one at a time)

If LH (or RH) BUS VOLT HIGH warning is still displayed

6. Verify good ammeter indications on restored alternator
7. Switch CROSS BUS on the restored alternator side
8. Refer to Single alternator failure / overvoltage drill (Para 2.1)

If both LH and RH BUS VOLT HIGH warning are still displayed

6. FIELD LH and RH *BOTH OFF*

If engine starting battery modification is applied

7. EMERG BATT switch ON
8. **Land as soon as possible.**

If engine starting battery modification is not applied

7. **Land as soon as possible**

Equipment will be lost accordingly to the following table:

LH Gen Bus	LH Avionic Bus	RH Avionic Bus	RH Gen Bus
Pitot Heat	DME	ADF	NAV Lights
Landing Light	Transponder	COM 2	Rudder Trim
Taxi Light	A/P	NAV 2	Stall Warning
	A/P Pitch Trim	MFD	
		AHRS/ADC*	

AHRS /ADC are fed from battery bus if Mod 2006/135 is embodied

NOTE *The battery can supply electrical power for at least 30 minutes.*

2.4 FAILED DOOR CLOSURE

Annunciation window	Alert window
PILOT DR OPEN	Main door open

OR

REAR DR OPEN	Rear door open

In case of door opening / unlocking, related PILOT or REAR DR OPEN alert is displayed. In this case, apply following procedure:

ON THE GROUND

1. Passengers and crew seat belts — *Fasten and tighten*
2. Affected door — *Verify correctly closed*

If door is open

3. Relevant engine — *Shut down*
4. Affected door — *Close and check*

If door is closed

3. Locking device — *Check*

If down in unlocked position

4. Abort mission.

IN FLIGHT

1. Passengers and crew seat belts — *Fasten and tighten*
2. Affected door and locked device — *Verify correctly closed*

If door is open or locking device is unlocked

3. **Land as soon as possible**

2.5 PITOT HEATING SYSTEM FAILURE

Annunciation window	Alert window
PITOT HEAT ON	Pitot heat
PITOT HEAT	Pitot heat

When the Pitot Heating system is activated, the green PITOT HEAT advisory light is turned ON.
If the amber PITOT HEAT caution light turns OFF, then the Pitot Heating system is functioning properly. Anytime the amber PITOT HEAT caution light is ON at the same time the green PITOT HEAT light is ON, then the Pitot Heating system is not functioning properly.

1. Pitot heat switch *OFF*
2. Verify Pitot Heating circuit breaker is IN
3. Pitot heat switch *ON*
4. Check PITOT HEAT caution light:
   If the amber light stays ON, assume a failure in the pitot heating system.
   Avoid visible moisture and OATs below 10 deg C.

2.6 COOLANT LIQUID LOW LEVEL

Annunciation window	Alert window
L COOLANT LOW	Lh Low Coolant

OR

R COOLANT LOW	Rh Low Coolant

When the engine coolant liquid level goes under the lower limit, the related L or R COOLANT LOW warning alert is displayed. Low coolant level condition may lead to high CHT/CT. When the warning is displayed, apply following procedure:

1. Check affected engine CHT/CT

If CHT is above 135°C or CT is above 120°C

2. Affected engine — *Reduce power setting to reduce CHT/CT up to the minimum practical*
3. **Land as soon as practical**

If CH/CT continues to rise and engine shows roughness or power loss

4. Affected engine — *SECURE (securing procedure on Para. 4)*
5. **Land as soon as possible** applying *one engine inoperative landing* procedure. See Para. 6.6

2.7 GEAR PUMP FAILURE

Annunciation window	Alert window
GEAR PUMP ON	Gear powered

The GEAR PUMP ON caution light turns ON when the landing gear hydraulic pump is electrically supplied.

After the landing gear retraction, if the red TRANS light turns OFF and the GEAR PUMP ON caution stays turned ON, this could indicate a gear pump relay failure to ON.

If TRANS light is OFF

1. Continue the mission monitoring the caution light.

If TRANS light is ON

2. Landing gear is not locked in UP position

NOTE

The electrical gear pump, continuously supplied, causes a current absorption which does not affect the mission unless this failure is coupled with the overall electrical failure. In this case, the residual battery endurance may be consistently lower than 30 minutes.

2.8 ENGINE FIRE

Annunciation window	Alert window
LH ENGINE FIRE	Left engine fire detected

OR

RH ENGINE FIRE	Right engine fire detected

In event of engine fire, the LH or RH ENGINE FIRE warning alert is displayed.
Refer to following procedures:

FIRE ON THE GROUND: see Para. 8.1
FIRE DURING TAKEOFF RUN: see Para. 8.2
FIRE IN FLIGHT: see Para. 8.3

2.9 LOSS OF INFORMATION DISPLAYED

When a LRU or a LRU function fails, a large red 'X' is typically displayed on the display field associated with the failed data.

NOTE

In most of cases, the red "X" annunciation is accompanied by a message advisory alert issuing a flashing ADVISORY Softkey annunciation which, once selected, acknowledges the presence of the message advisory alert and displays the alert text message in the Alerts Window. Refer to G950 Pilot's Guide for Tecnam P2006T (P/N 190-01146-00), last issue, Appendix A, Message Advisories list.

2.10 LOSS OF AIRSPEED INFORMATION

	AIRSPEED FAIL **(RED X ON DISPLAY FIELD)**
	Display system is not receiving airspeed input from the Air Data Computer.

INSTRUCTION: revert to standby analogical airspeed indicator

2.10 LOSS OF ATTITUDE INFORMATION

	ATTITUDE FAIL **(RED X ON DISPLAY FIELD)**
	Display system is not receiving attitude information from the AHRS**.**

INSTRUCTION: revert to standby analogical attitude indicator

2.11 LOSS OF ALTITUDE INFORMATION

	ALTITUDE FAIL **(RED X ON DISPLAY FIELD)**
	Display system is not receiving altitude input from the Air Data Computer.

INSTRUCTION: revert to standby analogical altitude indicator

2.12 Loss of vertical speed information

	VERT SPEED FAIL **(RED X ON DISPLAY FIELD)**
	Display system is not receiving vertical speed input from the Air Data Computer.

INSTRUCTION: determine vertical speed on the basis of altitude information

2.13 Loss of heading information

	HDG **(RED X ON DISPLAY FIELD)**
	Display system is not receiving valid heading input from AHRS.

INSTRUCTION: revert to magnetic compass

INTENTIONALLY LEFT BLANK

2.14 DISPLAY FAILURE

In the event of a display failure, the G950 System automatically switches to reversionary (backup) mode. In reversionary mode, all important flight information is presented on the remaining display in the same format as in normal operating mode. The change to backup paths is completely automated for all LRUs and no pilot action is required.

if the system fails to detect a display problem

1. DISPLAY BACKUP button *PUSH*

CAUTION

If a display fails, the related Integrated Avionics Unit (IAU) is cut off and can no longer communicate with the remaining display: consequently the NAV and COM functions provided to the failed display by the Integrated Avionics Unit are flagged as invalid on the remaining display.

INTENTIONALLY LEFT BLANK

3. ENGINE SECURING

Following procedure is applicable to shut-down one engine in flight:

1.	**Throttle Lever**	***IDLE***
2.	**Ignition**	***BOTH OFF***
3.	**Propeller Lever**	***FEATHER***
4.	**Fuel Selector**	***OFF***
5.	**Electrical fuel pump**	***OFF***

After securing engine(s), after analysing situation, refer immediately to following procedures:

ENGINE FAILURE IN FLIGHT:	see Para. 6.5
SINGLE GENERATOR FAILURE:	see Para. 2.1
or BOTH GENERATOR FAILURE:	see Para. 2.2
INFLIGHT ENGINE RESTART:	see Para. 6.2
ONE ENGINE INOPERATIVE LANDING:	see Para. 6.6
or LANDING WITHOUT ENGINE POWER:	see Para. 10.1

INTENTIONALLY LEFT BLANK

4. POWERPLANT EMERGENCIES

4.1 PROPELLER OVERSPEEDING

The aircraft is fitted with propeller/governor set by MT-Propeller such a way that the maximum propeller rpm exceedance is prevented. In case of propeller over-speeding in flight, apply following procedure:

1.	Throttle Lever	*REDUCE power to minimum practical*
2.	Propeller Lever	*REDUCE as practical (not in feathering)*
3.	RPM indicator	*CHECK*

If it is not possible to decrease propeller rpm, apply *engine securing procedure* (see Para. 3) and **land as soon as possible a**pplying *one engine inoperative landing* procedure (See Para. 6.6).

CAUTION

Maximum propeller rpm exceedance may cause the engine components damage. Propeller and engine shall be inspected in accordance with related Operators Manuals.

4.2 CHT LIMIT EXCEEDANCE

If CHT/CT exceeds its limit, apply following procedure:

1. Check affected engine CHT/CT

<u>If CHT is above 135°C or CT is above 120°C</u>

2. Affected engine *Reduce power setting to reduce CHT/CT up to the minimum practical*
3. **Land as soon as practical**

<u>If CHT/CT continues to rise and engine shows roughness or power loss</u>

4. Affected engine *SECURE (securing procedure on Para. 3)*
5. **Land as soon as possible** applying *one engine inoperative landing* procedure. See Para. 6.6

4.3 OIL TEMPERATURE LIMIT EXCEEDANCE

If oil temperature exceeds maximum limit (130°C):

1. OIL PRESS *CHECK*

If oil pressure is within limits

2. Affected engine *Reduce power setting to minimum applicable*
3. Affected engine *Keep propeller speed higher than 2000 RPM*

If oil pressure does not decrease

4. Airspeed *INCREASE*

NOTE

If oil temperature does not come back within limits, the thermostatic valve, regulating the oil flow to the heat exchangers, could be damaged or an oil leakage can be present in the oil supply line.

5. **Land as soon as practical** keeping the affected engine to the minimum necessary power
6. Monitor OIL PRESS and CHT/CT

if engine roughness / vibrations or erratic behaviour is detected:

7. Affected engine *SECURE (engine securing procedure on Para. 3)*
8. **Land as soon as possible** applying *one engine inoperative landing* procedure. See Para. 6.6

WARNING

Excessive oil pressure drop leads to a high pitch propeller configuration with consequent propeller feathering and engine stopping.

4.4 OIL PRESSURE LIMITS EXCEEDANCE

If oil pressure exceeds its lower or upper limit (0.8 – 7 bar), apply following procedure:

WARNING

Excessive oil pressure drop leads to a high pitch propeller configuration with consequent propeller feathering and engine stopping.

NOTE

An excessive oil pressure value can be counteracted by decreasing propeller rpm.

1. OIL PRESS *CHECK*

If oil pressure exceeds upper limit (7 bar)

2. Throttle Lever *first REDUCE affected engine power by 10%*
3. Propeller Lever *Keep low rpm*
4. OIL PRESS *CHECK (verify if came back within the limits)*
5. **Land as soon as practical**

If oil pressure is under the lower limit (0.8 bar)

2. **Land as soon as practical**

If oil pressure is continuously decreasing

3. **Affected engine** *SECURE (see engine securing procedure on Para. 3)*
4. **Land as soon as possible** applying *one engine inoperative landing* procedure. See Para. 6.6

4.5 LOW FUEL PRESSURE

If fuel pressure decreases below the lower limit (2.2 psi), apply following procedure:

1. Fuel press *CHECK*
2. Fuel quantity *CHECK*
3. Fuel consumption *MONITOR*

If a fuel leakage is deemed likely

5. **Land as soon as possible**.

If a fuel leakage can be excluded:

4. Electrical fuel pump *ON*
5. Feed the affected engine by means of opposite side fuel tank

If pressure does not come back within the limits

6. **Land as soon as practical**

INTENTIONALLY LEFT BLANK

5. OTHER EMERGENCIES

5.1 EMERGENCY DESCENT

CAUTION

Descent with airspeed at VLE, idle power and gear down will provide high descent rates and pitch attitudes up to -15°.

Anticipate altitude capture and return to level flight during emergency descent in order to assure a safe and smooth recovery from maneuver.

1.	Power levers	*IDLE*
2.	Flaps	*UP*
3.	IAS	*below VLO/VLE*
4.	Landing gear	*DOWN*
5.	Airspeed	*Up to VLE*

5.2 TOTAL ELECTRICAL FAILURE

In case of electrical system overall failure, apply following procedure:

1.	Emergency light	*ON if necessary*
2.	MASTER SWITCH	*OFF*
3.	FIELD LH and RH	*BOTH OFF*
4.	MASTER SWITCH	*ON*
5.	FIELD LH and RH	*BOTH ON*

If failure persists

9.	EMERG BATT switch	ON (if engine starting battery installed)

10. **Land as soon as possible** applying *emergency landing gear extension* procedure (see Para. 7.1)

WARNING

An electrical system overall failure prevents flaps operation: landing distance without flaps increases of about 25%.

CAUTION

A fully charged battery can supply electrical power for at least 30 minutes.

5.3 STATIC PORTS FAILURE

In case of static ports failure, the alternate static port in the cabin (shown below) must be activated.

1. Cabin ventilation *OFF (hot and cold air)*
2. ALTERNATE STATIC PORT VALVE *OPEN*
3. Continue the mission

5.4 UNINTENTIONAL FLIGHT INTO ICING CONDITIONS

1. Carburettor heat *BOTH ON*
2. Pitot heat *ON*
3. Fly as soon as practical toward a zone clear of visible moisture, precipitation and with higher temperature, changing altitude and/or direction.
4. Control surfaces *Move continuously to avoid locking*
5. Propellers rpm *INCREASE to prevent ice build-up on the blades*

WARNING

In event of ice build-up in correspondence of wing leading edges, stall speed increases.

WARNING

Ice build-up on wing, tail fin or flight control surfaces unexpected sudden roll and/or pitch tendencies can be experienced and may lead to unusual attitude and loss of aircraft control.

WARNING

Do not use Autopilot when icing formation is suspected or detected.

5.5 CARBURETTOR ICING

DURING TAKEOFF

The carburettor icing in "full throttle" mode is unlikely.

Take off in known or suspected icing formation is forbidden; in order to dispose of full engine take off power, take-off must be performed with carburettor heating OFF.

IN FLIGHT

Carburettor icing is considered probable when external air temperature is below 15° C and visible air moisture (clouds, mist, haze or fog) or atmospheric precipitation are present.

Generally, an OAT-to-dew point temperature spread lower than 10°C and OAT less than 15°C with visibility lower than 5 km is a positive indication of likely icing formation condition.

Should an inadvertent flight into known or forecast icing condition happen carburettor heating should be selected "ON" as soon as possible: the greater the advance carburettors are warmed the better the chances not to form ice and avoid engine power loss or reduction.

Keep Carb Heating "ON" until engine power is restored and area of possible icing condition is exited.

CAUTION

Carburettor Heating selected to "ON" will cause engine RPM reduction of about 100 RPM causing a sensible available engine power decrease.

5.6 FLAPS CONTROL FAILURE

DURING TAKEOFF

CAUTION

Flap UP take off, requires a T/O distance (50 ft height obstacle distance) increased by about 20%.

1. Airspeed *Keep below 93 KIAS*
2. **Land as soon as practical**

DURING APPROACH/LANDING

CAUTION

If the flaps control fails, consider the higher stall speed (see Section 5, Para. 6, "Stall Speed") and an increased landing distance of about 25%.

1. Airspeed *Keep over 75 KIAS*
2. **Land as soon as practical** on a runway of appropriate length

5.7 ELECTRICAL PITCH TRIM CONTROL FAILURE

a) Trim Runaway:
In the event of trim runaway:

1. AP DISC switch (if AP is installed)	PRESS and HOLD
2. TRIM DISC switch	OFF
3. AP DISC switch (if AP is installed)	RELEASE
4. Trim aircraft using trim wheel	

b) Trim Jamming:
Should trim control be jammed / inoperative:

1. Pitch trim breaker	CHECK

If circuit breaker is OUT:
2. Trim aircraft using trim wheel

If circuit breaker is IN:

2. TRIM DISC switch	OFF
3. Trim aircraft using trim wheel	

6 ONE ENGINE INOPERATIVE PROCEDURES

The ineffectiveness of one engine results in asymmetric traction which tends to yaw and bank the aircraft towards the inoperative engine. In this condition it is essential to maintain the direction of flight compensating the lower traction and counteracting the yawing effects by mean of rudder pedals. To improve directional control, it is advisable to bank the aircraft of about 5° to the side of the operating engine.

CAUTION

In addition, reduced available overall power and extended control surfaces will lead to a performances drop: a quick pitch attitude reduction will allow to keep a minimum safety airspeed.

The higher is the airspeed the better will be lateral and directional control efficiency: never allow airspeed to drop below V_{MCA}.

Best residual climb performances in OEI (One Engine Inoperative) condition have been recorded in Flap Up configuration and at V_{YSE}, which is marked as a Blue Line on the Airspeed indicator (calculated for maximum Take Off Weight and Sea, Level ISA condition) For actual condition V_{YSE} refer to Section 5 Para. 13, "One engine rate of climb".

CAUTION

V_{XSE} is actually very close to V_{YSE} in any condition, thus best climb performance will also be associated with best climb angle (gradient) performance. Refer to Section 5 Para. 14, One-Engine Rate of Climb at V_{xSE} , for relevant data.

6.1 CHARACTERISTIC AIRSPEEDS WITH ONE ENGINE INOPERATIVE

In case of one engine inoperative condition (OEI), pilot shall take into account the airspeeds shown below:

Conditions	Speed (KIAS)	
Minimum aircraft control speed with one engine inoperative and flaps set to T.O. (V_{MC})	62	
Best rate-of-climb speed OEI (V_{YSE})	MTOW 1180 kg	MTOW 1230 kg
	80	84
Best gradient speed OEI (V_{XSE})	79	83

NOTE

Reference is made to MTOW, 1180 kg and 1230 kg, at Sea Level and ISA condition (if Supplement G10- Increased MTOW @1230 KG - is applicable).

6.2 INFLIGHT ENGINE RESTART

WARNING

After:

- *mechanical engine seizure;*
- *fire;*
- *major propeller damage*

engine restart is not recommended.

1.	Carburettor heat	*ON if required*
2.	Electrical fuel pump	*ON*
3.	Fuel quantity indicator	*CHECK*
4.	Fuel Selector	*CHECK (Crossfeed if required)*
5.	FIELD	*OFF*
6.	Ignition	*BOTH ON*
7.	Operating engine Throttle Lever	*SET as practical*
8.	Stopped engine Throttle Lever	*IDLE*
9.	Stopped engine Propeller Lever	*FULL FORWARD*
10.	Start push-button	*PUSH*
11.	Propeller Lever	*SET at desired rpm*
12.	FIELD	*ON (check for positive ammeter)*
13.	Engine throttle levers	*SET as required*

If engine restart is unsuccessful

14.	EMERG BATT switch	ON (if starting battery installed)
15.	Repeat engine restart procedure	

CAUTION

After engine restart, if practical, moderate propeller rpm and throttle increase to allow OIL and CHT/CT temperatures for stabilizing in the green arcs.

NOTE

If the fuel quantity in the tank which feeds the stopped engine is low, select the opposite side fuel tank by means of the fuel selector.

If engine restart is still unsuccessful:

16.	Affected engine	*SECURE (see engine securing procedure Para. 3)*

17. **Land as soon as possible** applying *one engine inoperative landing* procedure. See Para. 6.6

6.3 ENGINE FAILURE DURING TAKEOFF RUN

BEFORE ROTATION: ABORT TAKE OFF

1.	**Throttle Lever**	***BOTH IDLE***
2.	**Rudder**	***Keep heading control***
3.	**Brakes**	***As required***

When safely stopped:

4.	Failed Engine Ignition	BOTH OFF
5.	Failed Engine Field	*OFF*
6.	Failed Engine Electrical fuel pump	*OFF*

IF THE DECISION IS TAKEN TO CONTINUE THE TAKEOFF:

WARNING

A take-off abort should always be preferred if a safe stop can be performed on ground.

A suggested "GO-NO-GO" criteria is: abort take-off until LG is still down and locked.

Once airborne accelerate to Blue Line Speed (V_{YSE}) before commanding LG retraction.

Take-off planning should take into account that high density altitude and aircraft mass may result in OEI negative climb rate.

V_{YSE} with flap up shall be flown in order to achieve best possible rate of climb after landing gear retraction and engine feathering.

1.	**Operating engine Throttle Lever**	***FULL POWER***
2.	**Operating engine Propeller Lever**	***FULL FORWARD***
3.	**Heading**	***Keep control using rudder and ailerons***
4.	**Attitude**	***Reduce as appropriate to keep airspeed over 62 KIAS***
5.	**Inoperative engine Propeller Lever**	***FEATHER***
6.	**Landing gear control lever**	***UP***
7.	**Airspeed**	***V_{XSE}/V_{YSE} as required***
8.	**Flaps**	***0°***

At safe altitude

9.	Inoperative engine	*Confirm and SECURE*
10.	Operative engine Electrical fuel pump	*Check ON*
11.	Operating engine	*Check engine instruments*
12.	Operating engine Fuel Selector	*Check correct feeding (crossfeed if needed)*

If engine restart is recommended:

13. Apply INFLIGHT ENGINE RESTART procedure *see Para 6.2*

If engine restart is unsuccessful or it is not recommended:

13. **Land as soon as possible**
14. One engine inoperative landing procedure. *see Para. 6.6*

WARNING

Following:

- *mechanical engine seizure;*
- *fire;*
- *major propeller damage*

engine restart is not recommended.

6.4 ENGINE FAILURE DURING CLIMB

1.	**Autopilot**	**OFF**
2.	**Heading**	***Keep control using rudder and ailerons***
3.	**Attitude**	***Reduce as appropriate to keep airspeed over 62 KIAS***

4.	Operating engine Throttle Lever	*FULL THROTTLE*
5.	Operating engine Propeller Lever	*FULL FORWARD*
6.	Operative engine Electrical fuel pump	*Check ON*
7.	Inoperative engine Propeller Lever	*FEATHER*
8.	Inoperative engine	Confirm and *SECURE*

If engine restart is possible:

9. Apply INFLIGHT ENGINE RESTART procedure *see Para 6.2*

If engine restart is unsuccessful or it is not recommended:

9. **Land as soon as possible**
10. One engine inoperative landing procedure. *see Para. 6.6*

WARNING

Following a mechanical engine seizure, fire or a major propeller damage engine restart is not recommended.

WARNING

Continuation of flight to a safe landing runway must be planned taking into account maximum operating ceiling in OEI condition. Refer to Section 5 Para 1, "One-engine rate of climb".

6.5 ENGINE FAILURE IN FLIGHT

1.	**Autopilot**	***OFF***
2.	**Heading**	***Keep control using rudder and ailerons***
3.	**Attitude**	***Adjust as appropriate to keep airspeed over 62 KIAS***

4.	Operating engine	*Monitor engine instruments*
5.	Operative engine Electrical fuel pump	*Check ON*
6.	Operating engine Fuel Selector	*Check correct feeding (crossfeed if needed)*

If engine restart is possible:

7.	Apply INFLIGHT ENGINE RESTART procedure	*see Para 6.2*

If engine restart is unsuccessful or it is not recommended:

8.	Land as soon as possible	
9.	One engine inoperative landing procedure.	*see Para. 6.6*

WARNING

Following a mechanical engine seizure, fire or a major propeller damage engine restart is not recommended.

WARNING

Continuation of flight to a safe landing runway must be planned taking into account maximum operating ceiling in OEI condition. Refer to Section 5 Para 12. Rate of climb with One Engine Inoperative.

6.6 ONE ENGINE INOPERATIVE LANDING

WARNING

Thoroughly evaluate residual Single Engine Go-Around capabilities and expected climb gradient should a Missed Approach / balked landing be executed.

Refer to Section 5, Para. Single engine go around/Balked landing/climb and Para. 13 and 14- One-engine Rate of Climb at V_{YSE} and V_{XSE}

WARNING

Autopilot must be kept OFF

1.	Seat belts	*Tightly fastened*
2.	Landing lights	*As required*
3.	Operating engine Fuel Selector	*Check correct feeding/crossfeed if needed*
4.	Inoperative engine Propeller Lever	*CHECK FEATHER*
5.	Inoperative engine	*CHECK SECURED*
6.	Operative engine Electrical fuel pump	*ON*

When on final leg:

7.	Flap	*T/O*
8.	Landing gear	*Select DOWN and check three green lights on*
9.	Approach Airspeed	V_{YSE}
10.	Touchdown speed	*70 KIAS*

7 LANDING GEAR SYSTEM FAILURES

7.1 EMERGENCY LANDING GEAR EXTENSION

NOTE

Landing gear extension failure is identified by means of the green lights not illuminated: relevant gear leg may not be fully extended and/or locked.

Light bulb operating status can be verified by pressing the LDG push-to-test button. Additionally, the red light TRANS indicates that one or more legs are moving and the PUMP ON amber light on the annunciator panel indicates the hydraulic gear pump is operating.

1.	Airspeed	*below* applicable VLO/VLE
2.	Landing gear control lever	*DOWN*
3.	Emergency gear extension access door	*REMOVE*
4.	RH control lever	*ROTATE 90° counterclockwise*
5.	Wait at least 20 seconds	

NOTE

Main Landing Gear legs green lights may be turned on, thus indicating effective main gear legs blocked in down position by mere effect of gravity force.

6.	LH control lever	*ROTATE 180° counterclockwise*
7.	**Land as soon as practical**	

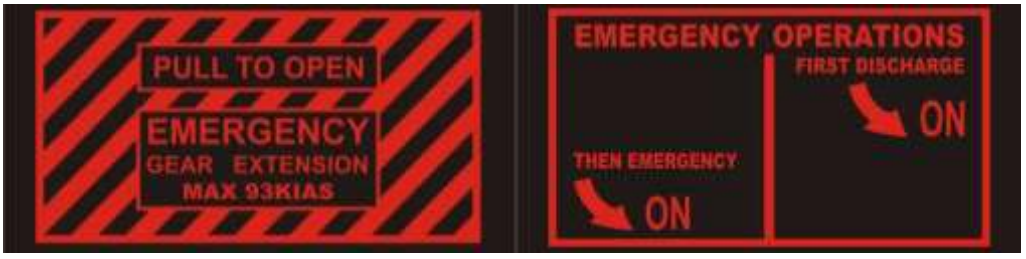

NOTE

The emergency landing gear extension operation takes about 20- sec.

7.2 COMPLETE GEAR UP OR NOSE GEAR UP LANDING

CAUTION

The following procedure applies if Nose Landing Gear is not extended and locked even after emergency extension procedure.

WARNING

A Nose Landing Gear up leg not down and locked might lead to a hazardous situation, especially on uneven runways.

WARNING

If landing gear position is not known, perform a tower fly-by at safe speed and altitude to have confirmation about its situation.

If possible coordinate fire brigade intervention along runway and report number of persons on board and remaining fuel type and quantity.

<u>If a complete Landing Gear up or a Nose Landing Gear up position is reported</u>:

Preparation

1.	Reduce fuel load if time and conditions permit	
2.	Crew and passengers safety belts	*Tightly fastened*
3.	Landing gear control lever	*UP*
4.	Green lights and TRANS light	*CHECK OFF*
5.	Flap setting	*plan approach with Flap Land*
	Before ground contact:	
6.	LH and RH Fuel Selector	*BOTH OFF*
7.	LH and RH Electrical fuel pump	*BOTH OFF*
8.	Ignitions	*ALL OFF*
	On touch down:	
9.	Landing attitude	*slight nose-up and wings levelled,*
10.	Touchdown speed	*as low as 50 KIAS with flap*
11.	Aircraft nose	*gently lower as speed bleeds off*
	After aircraft stops:	
12.	FIELD LH and RH	*BOTH OFF*
13.	MASTER SWITCH	*OFF*

CAUTION

Master switch to OFF impairs radio communication and outside aircraft lighting.

14. Aircraft Evacuation *carry out if necessary*

WARNING

Consider use of ditching emergency exit to escape in case pilot or passenger doors are blocked, watch for engine hot parts, fuel, hydraulic fluid or oil spills. Leave aircraft in upwind direction.

7.3 PARTIAL MAIN LG EXTENSION

CAUTION

The following procedure applies if one or both Main Landing Gear legs are not completely extended and locked even after emergency extension procedure.

WARNING

A partial gear landing (RH and/or LH leg not down and locked) might turn into a hazardous situation, especially on uneven runways.

If possible try to obtain a symmetric gear extension (e.g. by trying further landing gear retraction) in order to avoid swerving after touchdown. A gear up landing is generally considered safer.

WARNING

If landing gear position is not known, perform a tower fly-by at safe speed and altitude to have confirmation about its situation.

If possible coordinate fire brigade intervention along runway and report number of persons on board and remaining fuel type and quantity.

Preparation

1.	Reduce fuel load if time and conditions permit	
2.	Crew and passengers safety belts	*Tightly fastened*
3.	Landing gear control lever	*UP*
4.	Green lights and TRANS light	*CHECK OFF*
5.	Flap setting	*plan approach with Flap Land*

<u>If partially extended landing gear is confirmed:</u>

Before ground contact:

6.	LH and RH Fuel Selector	*BOTH OFF*
7.	LH and RH Electrical fuel pump	*BOTH OFF*
8.	Ignitions	*ALL OFF*

On touch down:

9.	Align for approach	*on the runway centreline*
10.	Touchdown speed	*as low as 50 KIAS*
11.	Touchdown	*on the extended gear only*
12.	Heading and direction	*maintain applying appropriate aileron and rudder/steering control*
13.	Retracted leg	*keep off the ground as long as possible*

After aircraft stops:

14. FIELD LH and RH *BOTH OFF*
15. MASTER SWITCH *OFF*

CAUTION

Master switch to OFF impairs radio communication and outside aircraft lighting.

16. Aircraft Evacuation *carry out if necessary*

WARNING

Consider use of ditching emergency exit to escape in case pilot or passenger doors are blocked, watch for engine hot parts, fuel, hydraulic fluid or oil spills. Leave aircraft in upwind direction.

7.4 FAILED RETRACTION

1. Airspeed — *Keep below applicable VLO/VLE*
2. Landing gear control lever — *DOWN*

WARNING

A Landing Gear lever recycle (further retraction attempt) may result in a final partial Landing Gear Extension, which may then compromise safe landing aircraft capability.

3. Landing Gear lights — *Check*

If a safe landing configuration is obtained (3 greens)

4. Land normally

If a safe landing gear configuration is not obtained:

4. Emergency LG extension procedure — *Apply (See Para. 7.1)*
5. Land as soon as practical

7.5 UNINTENTIONAL LANDING GEAR EXTENSION

CAUTION

An unwanted landing gear extension, with at least one leg moving downward, may be caused by hydraulic fluid loss and it is signaled by

- *significant aerodynamic noise increase;*
- *light and counteractable nose down pitch moment;*
- *red TRANS light turned on.*

1. Airspeed — *Keep below applicable VLO/VLE*
2. Landing gear control lever — *DOWN*
3. Landing Gear lights — *Check*

If a safe landing configuration is obtained (3 greens)

4. Land normally

If a safe landing gear configuration is not obtained:

4. Emergency LG extension procedure — *Apply (See Para. 7.1)*
5. **Land as soon as practical**

INTENTIONALLY LEFT BLANK

8 SMOKE AND FIRE OCCURRENCE

8.1 ENGINE FIRE ON THE GROUND

1.	**Fuel Selectors**	***BOTH OFF***
2.	**Ignitions**	***ALL OFF***
3.	**Electrical fuel pumps**	***BOTH OFF***
4.	**Cabin heat and defrost**	***OFF***
5.	**MASTER SWITCH**	***OFF***
6.	**Parking Brake**	***ENGAGED***
7.	**Aircraft Evacuation**	**carry out immediately**

WARNING

Consider use of ditching emergency exit to escape in case pilot or passenger doors are blocked, watch for engine hot parts, fuel, hydraulic fluid or oil spills. Leave aircraft in upwind direction.

8.2 ENGINE FIRE DURING TAKEOFF RUN

BEFORE ROTATION: ABORT TAKE OFF

1.	**Throttle Lever**	**BOTH IDLE**
2.	**Rudder**	***Keep heading control***
3.	**Brakes**	***As required***

With aircraft under control

4.	**Fuel Selector**	***BOTH OFF***
5.	**Ignitions**	***ALL OFF***
6.	**Electrical fuel pump**	***BOTH OFF***
7.	**Cabin heat and defrost**	***OFF***
8.	**MASTER SWITCH**	***OFF***
9.	**Parking Brake**	***ENGAGED***
10.	**Aircraft Evacuation**	***carry out immediately***

WARNING

Consider use of ditching emergency exit to escape in case pilot or passenger doors are blocked, watch for engine hot parts, fuel, hydraulic fluid or oil spills. Leave aircraft in upwind direction.

IF THE DECISION IS TAKEN TO CONTINUE THE TAKEOFF:

WARNING

A take-off abort should always be preferred if a safe stop can be performed on ground.

A suggested "GO-NO-GO" criteria is: abort take-off until LG is still down and locked.

Once airborne accelerate to Blue Line Speed (V_{YSE}) before commanding LG retraction.

Take-off planning should take into account that high density altitude and aircraft mass may result in OEI negative climb rate.

V_{YSE} with flap up shall be flown in order to achieve best possible rate of climb after landing gear retraction and engine feathering.

1.	**Operating engine Throttle Lever**	***FULL POWER***
2.	**Operating engine Propeller Lever**	***FULL FORWARD***
3.	**Heading**	***Keep control using rudder and ailerons***
4.	**Attitude**	***Reduce as appropriate to keep airspeed over 62 KIAS***
5.	**Fire affected engine Propeller Lever**	***FEATHER***
6.	**Landing gear control lever**	***UP***
7.	**Airspeed**	***V_{XSE}/V_{YSE} as required***
8.	**Flaps**	***0°***

At safe altitude

9.	Cabin heat and defrost	*BOTH OFF*
10.	Fire affected engine Fuel Selector	*Confirm and OFF*
11.	Fire affected engine Ignitions	*Confirm and BOTH OFF*
12.	Fire affected engine Electrical fuel pump	*Confirm and OFF*
13.	Fire affected engine FIELD	*OFF*
14.	**Land as soon as possible** applying *one engine inoperative landing* procedure. See Para. 6.6	

8.3 ENGINE FIRE IN FLIGHT

1.	**Cabin heat and defrost**	***BOTH OFF***
2.	**Autopilot**	***OFF***
3.	**Fire affected engine Fuel Selector**	***Confirm and OFF***
4.	**Fire affected engine Ignition**	***Confirm and BOTH OFF***
5.	**Fire affected engine Throttle Lever**	***Confirm and FULL FORWARD***
6.	**Fire affected engine Propeller Lever**	***Confirm and FEATHER***
7.	**Fire affected engine Electrical fuel pump**	***OFF***
8.	**Heading**	***Keep control using rudder and ailerons***
9.	**Attitude**	***Adjust as appropriate to keep airspeed over 62 KIAS***
10.	**Fire affected engine Field**	***OFF***
11.	**Cabin ventilation**	***OPEN***

12. **Land as soon as possible** applying *one engine inoperative landing* procedure. See Para. 6.6

8.4 ELECTRICAL SMOKE IN CABIN ON THE GROUND

1.	**MASTER SWITCH**	***OFF***
2.	**Cabin heat and defrost**	***OFF***
3.	**Throttle Lever**	***BOTH IDLE***
4.	**Ignitions**	***ALL OFF***
5.	**Fuel Selector**	***BOTH OFF***
6.	**Parking Brake**	***ENGAGED***
7.	**Aircraft Evacuation**	**carry out immediately**

WARNING

Consider use of ditching emergency exit to escape in case pilot or passenger doors are blocked, watch for engine hot parts, fuel, hydraulic fluid or oil spills. Leave aircraft in upwind direction.

8.5 ELECTRICAL SMOKE IN CABIN DURING FLIGHT

1. **Cabin ventilation** ***OPEN***
2. **Emergency light** ***ON***
3. **Standby attitude indicator switch** ***ON***
4. **Gain VMC conditions as soon as possible**

In case of cockpit fire:

5. **Fire extinguisher** ***use toward base of flames***

CAUTION

A tripped circuit breaker should not be reset.

If smoke persists, shed electrical supply in order to isolate faulty source by:

6. FIELD LH and RH *OFF*
7. AVIONICS LH and RH *OFF*
8. CROSS BUS LH and RH *BOTH OFF*

CAUTION

A fully charged battery can supply electrical power for at least 30 minutes.

If faulty source is found:

9. It may be possible to restore non faulty power sources (one at a time)

If smoke persists:

WARNING

Before total electrical system shutdown consider gaining VMC condition, at night set personal emergency light on.

Only emergency light and emergency ADI will be electrically powered.

All radio COM and NAV, Landing Gear lever (normal mode) and indication lights, electrical trims and flaps will be unserviceable.

10. MASTER SWITCH *OFF*

11. **Land as soon as possible**

When on ground:

12. Aircraft Evacuation *carry out as necessary*

WARNING

Consider use of ditching emergency exit to escape in case pilot or passenger doors are blocked, watch for engine hot parts, fuel, hydraulic fluid or oil spills. Leave aircraft in upwind direction.

9 UNINTENTIONAL SPIN RECOVERY

WARNING

Spin behaviour has not been demonstrated since certification process does not required it for this aircraft category.

Intentional spin is forbidden.

Stall with one engine inoperative is forbidden.

Should an unintentional spin occur, the classic recovery manoeuvre is deemed as being the best action to undertake:

1. **Both engines throttles** ***idle***
2. **Flight Controls** ***centralize***
3. **Rudder** ***fully against rotation until it stops***

10 LANDING EMERGENCIES

10.1 LANDING WITHOUT ENGINE POWER

In case of double engine failure both propellers should be feathered to achieve maximum efficiency. Best glide speed is attained with flap UP and equals V_Y for current aircraft mass and air density altitude. Refer to Section 5, Para. "Enroute Rate of Climb".

CAUTION

Normal landing gear extension requires MASTER switch ON, an efficient battery and takes around 20 seconds.
LG selection should be appropriately anticipated when sure on final.
Flap can be set to T/O or LAND when sure on final to reduce landing ground roll on short field.

Touchdown speed can be as low as 50 kt with flap down.

1. Airspeed

MTOW 1180kg	MTOW 1230 kg
V_Y = 83 KIAS	V_Y = 84 KIAS

2. Flaps — *UP*
3. Emergency landing field — *Select*

WARNING

Emergency landing strip should be chosen considering surface condition, length and obstacles. Wind can be guessed by smoke plumes direction and tree tops or grass bending. Select touchdown direction according to the furrows of a plowed field, not across.

4. Safety belts — *FASTEN and tighten*
5. Flaps — *Set when landing is assured*
6. Landing gear control lever — *DOWN when landing is assured*

CAUTION

To reduce landing gear extension time, evaluate use of emergency control system which requires about 12 sec.

Before touch down

7.	Fuel Selector	*BOTH OFF*
8.	Electrical fuel pump	*BOTH OFF*
9.	Ignitions	*ALL OFF*
10.	MASTER SWITCH	*OFF*

When stopped

11.	Aircraft Evacuation	*carry out if necessary*

WARNING

Consider use of ditching emergency exit to escape in case pilot or passenger doors are blocked, watch for engine hot parts, fuel, hydraulic fluid or oil spills. Leave aircraft in upwind direction.

10.2 LANDING WITH NOSE LANDING GEAR TIRE DEFLATED

WARNING

If possible, as a nose landing gear flat tire condition is known, coordinate fire brigade intervention along runway and report number of persons on board and remaining fuel type and quantity.

If Nose Landing Gear flat tire is confirmed:

Preparation

1.	Crew and passengers safety belts	*Tightly fastened*
2.	If time permits	*Burn fuel to lower landing weight*
3.	Flap setting	*plan approach with Flap Land*

Before ground contact:

4.	Fuel Selector	*BOTH OFF*
5.	Electrical fuel pump	*BOTH OFF*
6.	Ignitions	*ALL OFF*

On touch down:

7.	Landing attitude	*slight nose-up and wings levelled,*
8.	Touchdown speed	*as low as 50 KIAS with flap*
9.	Aircraft nose	*gently lower as speed bleeds off*

After aircraft stops:

10.	FIELD LH and RH	*BOTH OFF*
11.	MASTER SWITCH	*OFF*

CAUTION

Master switch to OFF impairs radio communication and outside aircraft lighting.

12.	Aircraft Evacuation	*carry out if necessary*

WARNING

Consider use of ditching emergency exit to escape in case pilot or passenger doors are blocked, watch for engine hot parts, fuel, hydraulic fluid or oil spills. Leave aircraft in upwind direction.

10.3 LANDING WITH A KNOWN MAIN LANDING GEAR TIRE DEFLATED

WARNING

An asymmetrical landing gear tire condition (RH and/or LH tires deflated) might turn into a hazardous situation, especially on uneven runways.

WARNING

If possible, as a landing gear tires condition is known, coordinate fire brigade intervention along runway and report number of persons on board and remaining fuel type and quantity.

If a main Landing Gear flat tire is confirmed:

Preparation

1.	Crew and passengers safety belts	*Tightly fastened*
2.	Flap setting	*plan approach with Flap Land*

Before ground contact:

3.	Ignitions	*ALL OFF*
4.	LH and RH Fuel Selector	*BOTH OFF*
5.	LH and RH Electrical fuel pump	*BOTH OFF*

On touch down:

6.	Align for approach	*on the runway centreline*
7.	Touchdown speed	*as low as 50 KIAS*
8.	Touchdown	*on the good tire gear only*
9.	Heading and direction	*maintain applying appropriate aileron and rudder/steering control*
10.	Flattened tire	*keep off the ground as long as possible*

After aircraft stops (or if runway departure is imminent):

11.	FIELD LH and RH	*BOTH OFF*
12.	MASTER SWITCH	*OFF*

CAUTION

Master switch to OFF impairs radio communication and outside aircraft lighting.

13.	Aircraft Evacuation	*carry out if necessary*

WARNING

Consider use of ditching emergency exit to escape in case pilot or passenger doors are blocked, watch for engine hot parts, fuel, hydraulic fluid or oil spills. Leave aircraft in upwind direction.

10.4 LANDING WITHOUT BRAKES

CAUTION

If possible, select an airport with suitable runway length.

Otherwise, evaluate the possibility to perform a gear up landing (refer to procedure reported on Para. 7.2). In the latter case consider the increasing hazard of an uneven pavement.

1. Safety belts *FASTEN*

After touch down if runway is deemed insufficient to decelerate:

2. Fuel Selector *BOTH OFF*
3. Electrical fuel pumps *BOTH OFF*
4. Ignitions *ALL OFF*
5. FIELD LH and RH *BOTH OFF*
6. MASTER SWITCH *OFF*

CAUTION

Master switch to OFF impairs radio communication and outside aircraft lighting.

Before end of runway or if runway departure is imminent:

7. Landing gear control lever *UP*

After aircraft stops:

8. Aircraft Evacuation *carry out if necessary*

WARNING

Consider use of ditching emergency exit to escape in case pilot or passenger doors are blocked, watch for engine hot parts, fuel, hydraulic fluid or oil spills. Leave aircraft in upwind direction.

11 AIRCRAFT EVACUATION

WARNING

Leave the aircraft when engines are fully stopped. Watch for engine hot parts and fuel, hydraulic fluid or oil spills when using fuselage doors. If fuselage doors are unserviceable escape through the ditching emergency exit

In case of engine fire escape from opposite or upwind aircraft side.

Verify (if not yet performed):

1.	**Fuel Selectors**	***BOTH OFF***
2.	**Ignitions**	***ALL OFF***
3.	**Electrical fuel pumps**	***BOTH OFF***
4.	**MASTER SWITCH**	***OFF***
5.	**Parking Brake**	***ENGAGED***
6.	**Leave the aircraft using emergency exits**	

12 DITCHING

WARNING

Contact with water shall happen with aircraft longitudinal axis and direction of motion parallel to the wave at the minimum possible speed. Keep the nose up as long as possible.

Once in the water, the aircraft shall be evacuated through the ditching emergency exit, if available put life vest on and set dinghy out first. Inflate them only outside the aircraft.

If available, try to approach any existing ship in the vicinity in order to be rapidly located and rescued right after ditching.

1.	Landing gear	*UP*
2.	Safety belts	*Tighten and fastened*
3.	Flaps	*FULL*

Before water impact

4.	Fuel Selector	*BOTH OFF*
5.	Electrical fuel pump	*BOTH OFF*
6.	Ignitions	*ALL OFF*
7.	MASTER SWITCH	*OFF*
8.	FIELD LH and RH	*BOTH OFF*
9.	Impact speed	*50 KIAS*

Aircraft evacuation

10.	Emergency exit handle	*rotate clockwise*
11.	Latch door	*push outward*
12.	Life vests	*don*
13.	Evacuate the aircraft	

Supplement G1: pages replacement instructions

SECTION 4 - NORMAL PROCEDURES

Apply following page replacement procedure

Supplement G1 – NORMAL PROCEDURES pages replace Basic AFM Section 4 as a whole.

INTENTIONALLY LEFT BLANK

SECTION 4 – NORMAL PROCEDURES

INDEX

1. INTRODUCTION 3
1.1. Normal ops general recommendations 3
2. AIRSPEEDS 7
2.1. Normal operations 7
2.2. Single engine training 8
3. Normal procedures checklist 9
3.1 Recommendations for cold weather operations 9
3.2 Pre-flight check – aircraft walk-around 11
3.3 Cockpit inspections 17
3.4 Engine starting 20
3.5 Before taxiing 22
3.6 Taxiing 22
3.7 Prior to takeoff 23
3.8 Line-up 24
3.9 Takeoff and climb 25
3.10 Cruise 26
3.11 Turbulent air operation 26
3.12 Descent and approach 27
3.13 Before landing 27
3.14 Balked landing/missed approach 28
3.15 After landing 28
3.16 Parking/shut down 29
3.17 Postflight checks 30
4. ADDITIONAL GUIDANCE FOR RNAV GPS 31
4.1 APPROACH APPLICATIONS 33
4.2 PBN (RNAV & RNP) OPERATIONAL ELIGIBILITY 36
5. Ground towing, parking and mooring 37
5.1. Towing 37
5.2. Parking 37
5.3. Mooring 37

INTENTIONALLY LEFT BLANK

1. INTRODUCTION

Section 4 describes checklists and recommended procedures for the conduct of normal operations for ***P2006T*** aircraft.

1.1. NORMAL OPS GENERAL RECOMMENDATIONS

The following points should be always brought to attention to pilot/instructor/operator when operating a Tecnam aircraft equipped with variable pitch propeller:

1. Propeller governor ground check.
As prescribed by the propeller/governor manufacturer, a drop of 400/500 propeller RPM should be produced during this check. Its aim is to confirm the governor efficiency, not its complete feathering function.
Especially during the first cycle of propeller lever pulling, the governor tendency is to respond to the input with consistent delay, causing the pilot to continue moving back the propeller lever until an abrupt RPM change is observed. This causes an excessive drop in propeller speed that may reach up to 800 RPM in some cases and, consequently, a drop of up to 2000 engine shaft RPM. The long term result is a major wear of engine gearbox, bushings and pistons. In some cases, it may also result in detonation.
In order to avoid these long term adverse effects, the governor ground check should be performed by slowly and gently pulling the propeller lever. The purging cycle should be repeated 3 times, making sure that the governor closely and firmly controls the rpm.

The following recommendations have to be followed during the test:

- propeller speed drops shall be of 400/500 propeller RPM
- the cycle shall be repeated 3 times
- the pilot shall be ready to push the propeller lever if a drop of >500 RPM is recorded

2. Power changes.
When power setting changes are required in any flight condition, remember the following correct procedure:

Power increase = FIRST Prop THEN Map

Power reduction = FIRST Map THEN Prop

Useful guideline chart that could be used for best propeller/manifold combination is following reported:

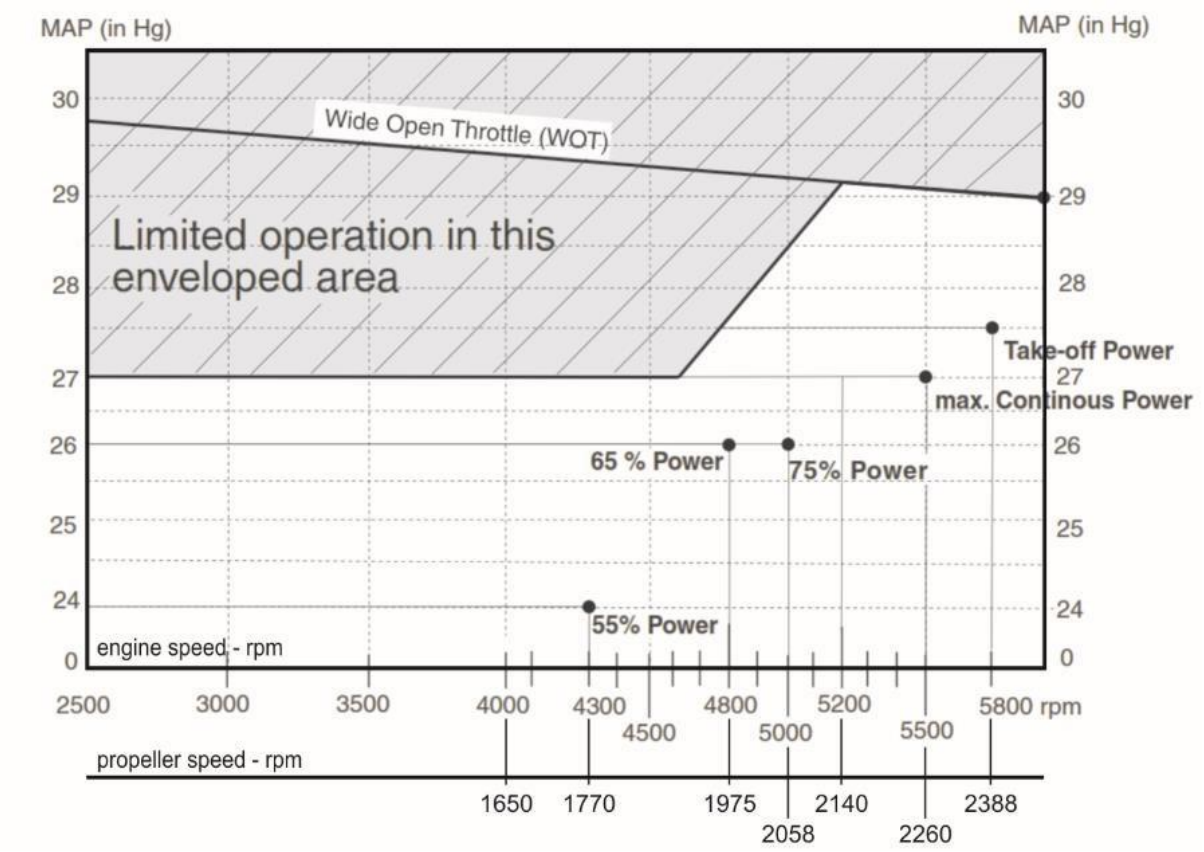

3. Suitable Fuels.

Tecnam remember operators to fill the aircraft with approved and suitable fuels. Use of not approved/unknown fuels may cause damages to the engine.

ONLY USE APPROVED FUELS

For details refer to Section 2 of this manual (or applicable Supplement) and latest issue of Rotax SI-912-016

G950 system use

For safety reasons, G950 operational procedures must be learned on the ground.

Document Garmin G950 Pilot's Guide for Tecnam P2006T (P/N 190-01146-XX) – last issue, reports detailed instructions to operate the system in subject. Make always reference to the above mentioned document.

CAUTION

Garmin G950 Pilot's Guide for Tecnam P2006T (P/N 190-01146-XX) – last issue - must be carried onboard the airplane at all times.

WARNING

To reduce the risk of unsafe operation, carefully review and understand all aspects of the G950 Pilot's Guide documentation at the last issue and the AFM for the aircraft. Thoroughly practice basic operation prior to actual use. During flight operations, carefully compare indications from the G950 to all available navigation sources, including the information from other NAVAIDs, visual sightings, charts, etc. For safety purposes, always resolve any discrepancies before continuing navigation.

WARNING

Do not use basemap (land and water data) information for primary navigation. Basemap data is intended only to supplement other approved navigation data sources and should be considered as an aid to enhance situational awareness. Do not use outdated database information. Databases used in the G950 system must be updated regularly in order to ensure that the information remains current. Pilots using any outdated database do so entirely at their own risk. Reference "Garmin G950 Pilot's Guide for the Tecnam P2006T" (P/N 190-01146-XX), last issue, Appendix B concerning SD card use and databases.

WARNING

For safety reasons, G950 operational procedures must be learned on the ground.

WARNING

Because of variation in the earth's magnetic field, operating the G950 within the following areas could result in loss of reliable attitude and heading indications.

North of 72° North latitude at all longitudes; South of 70° South latitude at all longitudes; North of 65° North latitude between longitude 75° W and 120° W. (Northern Canada); North of 70° North latitude between longitude 70° W and 128° W. (Northern Canada); North of 70° North latitude between longitude 85° E and 114° E. (Northern Russia); South of 55° South latitude between longitude 120° E and 165° E. (Region south of Australia and New Zealand).

WARNING

The altitude calculated by G950 GPS receivers is geometric height above Mean Sea Level and could vary significantly from the altitude displayed by pressure altimeters, such as the GDC 74A Air Data Computer, or other altimeters in aircraft. GPS altitude should never be used for vertical navigation. Always use pressure altitude displayed by the G950 PFD or other pressure altimeters in aircraft.

NOTE

If the pilot profile is changed during the flight, the HSI could not indicate the correct LOC or VOR indication until the pilot manually tunes the active frequency. Make sure that the displayed indication on the HSI indicator is consistent with the selected frequency.

NOTE

The data contained in the terrain and obstacle databases comes from government agencies. Garmin accurately processes and cross-validates the data, but cannot guarantee the accuracy and completeness of the data. Reference"Garmin G950 Pilot's Guide for the Tecnam P2006T" (P/N 190-01146-XX), last issue, Appendix B concerning SD card use and databases.

NOTE

Use of polarized eyewear may cause the flight displays to appear dim or blank.

2. AIRSPEEDS

2.1. NORMAL OPERATIONS

The following airspeeds are those which are significant for normal operations, with reference to both MTOW: 1180 kg and 1230 kg (if Supplement G10 - Increased MTOW @1230 KG - is applicable).

		MTOW	
	FLAPS	**1180kg**	**1230 kg**
Rotation Speed (in takeoff, V_R)	T/O	**64 KIAS**	**65 KIAS**
Best Angle-of-Climb Speed (V_X)	0°	**73 KIAS**	**72 KIAS**
Best Rate-of-Climb speed (V_Y)	0°	**80 KIAS**	**84 KIAS**
Approach speed	T/O	**90 KIAS**	**90 KIAS**
Final Approach Speed	FULL	**70 KIAS**	**71 KIAS**
Manoeuvring speed (V_A)	0°	**118 KIAS**	**122 KIAS**
Never Exceed Speed (V_{NE})	0°	**167 KIAS**	**171 KIAS**

2.2. SINGLE ENGINE TRAINING

V_{SSE} is a speed selected as training aid for pilots in the handling of multi-engine aircraft. It is the minimum speed for intentionally rendering on engine inoperative in flight. This minimum speed provides the margin the manufacturer recommends for us when intentionally performing engine inoperative maneuvers during training. Shutting down an engine for training shall not become a habit; for safety purpose, and in order to optimise training, engine shutdown to perform OEI shall be executed only when necessary and required by regulations (e.g. during flight check, skill tests or demonstration as per 14CFR Part61 or similar).

A simulated feather condition is obtained with propeller lever full forward and throttle lever set at 13.5 in Hg MAP at 70-90 KIAS and 2000-4000 ft (density altitude).

Recommended safe simulated OEI speed (V_{SSE})	**70 KIAS**

NOTE *Keep speed above V_{SSE} for simulated OEI training operations.*

In normal operations, shutting down an engine for training shall not become a habit, in particular for safety reasons and in order to optimise training; engine shutdown to perform OEI shall be executed only when required by regulations (e.g. during flight check, skill tests or demonstration as per 14CFR Part61 or equivalent rule).

The continuous operation of engine securing for training may indeed cause long term damages to the engine itself due to the high load coming from propeller (which is in feathering angle during the engine re-starting).

3. NORMAL PROCEDURES CHECKLIST

3.1 RECOMMENDATIONS FOR COLD WEATHER OPERATIONS

Engine cold weather operation

Refer to Rotax 912 Series Operators Manual, last issue, providing instructions for operating media (lubricant and coolant specifications) to be used in cold weather operation.

Parking

When the airplane is parked in cold weather conditions and it is expected to be soaked at temperatures below freezing, some precautions need to be taken.

Clear snow, slush, and ice in the parking area, or at least clear the area around the tires to prevent them from freezing to the ground. Apply plugs on Pitot and static ports.

The exposed airframe parts should be protected, especially the engines, the wheels, the blades and the gears against the snow or ice accumulation. Water and other freezable liquids should be removed from the airplane.

Standing water that could freeze should be removed from critical parts, as flaps and ailerons hinges, trim tabs hinges, drain points, LG doors, cabin doors etc.

With an ambient temperature of below -20°C, remove battery and store in a warm dry place; additionally in order to prevent a heavy discharge and to increase the battery life time, it is recommended to use an external power source for engine starting at temperatures lower than –15°C.

When wheel brakes come in contact with ice, slush, or snow with freezing conditions, the brake disk may freeze: park the aircraft with parking brake control knob in OFF position and ensure the aircraft is properly chocked and moored.

In any case, when the probability of ice, snow, or heavy frost is forecast, the use of a hangar is strongly recommended.

An external inspection of the aircraft is performed before each flight, as prescribed on Section 3.1.

For cold weather operations, the crew must focus on the check of following parts of airplane (free of snow/ice/standing water).

- control surfaces
- fuselage
- wings
- vertical and horizontal stabilator
- stall warning switch
- engine inlets
- engines draining points
- propeller blades
- LG doors
- Pitot, and static ports
- fuel tank vents

Tires show low pressure in cold weather: the required adjustments to inflation pressure should be performed on tires cooled to ambient temperature.

If the crew detects ice, anti-icing products are not allowed. To remove ice, tow the aircraft in the hangar and operate with a soft brush or a humid cloth.

WARNING

Removal of snow/ice accumulations is necessary prior to take-off because they will seriously affect airplane performance. Aircraft with ice/snow accumulation is not cleared for flight.

If the aircraft must be operated in cold weather conditions within the range -25ºC to -5ºC**,** it is suggested to perform following procedure in order to speed up the engine warm-up:

- Tow the airplane in a warm hangar (warmer than -5°C);
- Let airplane temperature stabilize;
- Check pressure in hydraulic system, recharge if necessary;
- Heat the cabin to a suitable value to avoid windshield frost in flight; an electrical fan heater may be used inside the cabin;
- Tow airplane outside and perform engine starting as soon as possible.

3.2 PRE-FLIGHT CHECK – AIRCRAFT WALK-AROUND

To perform the aircraft walk-around, carry out the checklists according to the pattern shown in Figure 4-1.

WARNING

If ignition switches are turned ON, a propeller movement can cause the engine starting with consequent hazard for people nearby.

NOTE

Visual inspection is defined as follows: check for defects, cracks, de-lamination, excessive play, unsafe or improper installation as well as for general condition, presence of foreign objects, slippage markers etc. For control surfaces, visual inspection also involves additional check for freedom of movement. Always check the ground in the area of the aircraft for evidence of fuel, oil or operating fluids leakages.

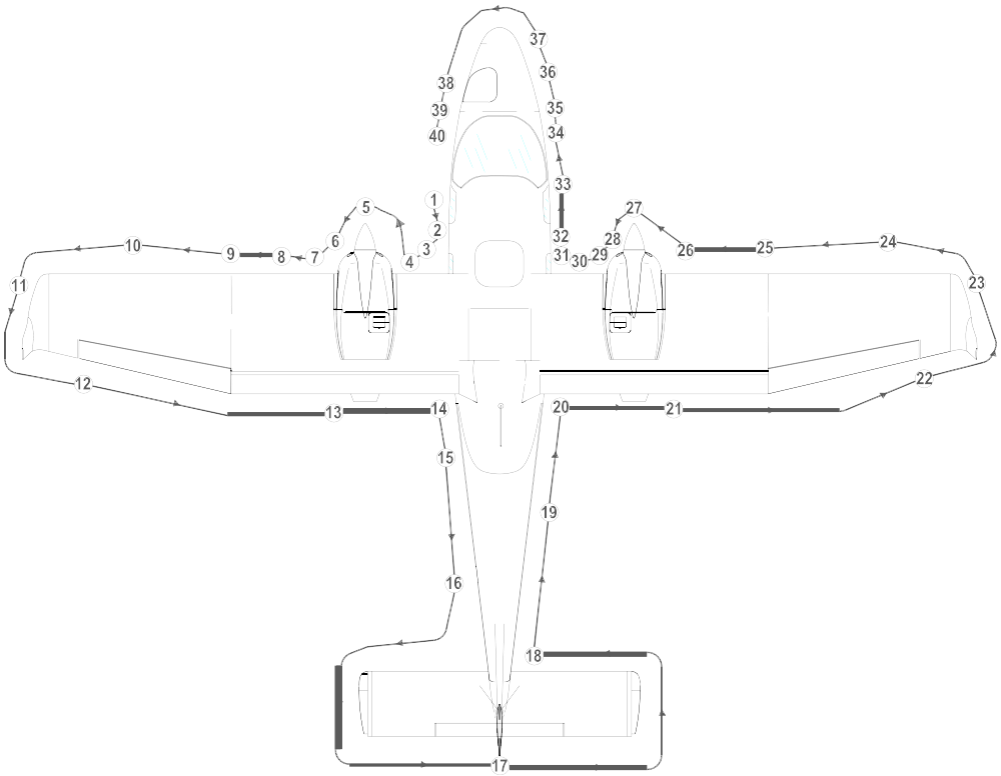

Figure 4.1

1	Pilot door and cabin	*Check door for integrity. Turn ON the Master Switch and check Stall Warning switch for operation and condition; check lighting of Landing/Taxi/Nav/Strobe lights, then turn OFF the Master Switch.*
2	Left main landing gear	*Check fuselage skin status, tire status (cuts, bruises, cracks and excessive wear), slippage markers integrity, gear structure and shock absorber, hoses, gear door attachments and gear micro-switches. There should be no sign of hydraulic fluid leakage.*
3	Wheel chock	*Remove if employed*
4	Propeller and spinner	*The propeller blades and spinner should be free of cracks, nicks, dents and other defects and should rotate freely. Check fixing and lack of play between blades and hub.*
5	*Left engine nacelle*	*Perform following inspections:* *a) Check the surface conditions.* *b) Nacelle inlets and exhausts openings must be free of obstructions. If inlet and outlet plugs are installed, they should be removed.* *c) Check radiators. There should be no indication of leakage of fluid and they have to be free of obstructions.* *d) <u>Only before the first flight of a day</u>:* *(1) Verify coolant level in the expansion tank, replenish as required up to top (level must be at least 2/3 of the expansion tank).* *(2) Verify coolant level in the overflow bottle through the slot under the nacelle: level must be between min. and max. mark. Replenish if required removing the upper cowling; after that, install upper cowling checking for interferences with radiators*

(3) Turn the propeller by hand to and fro, feeling the free rotation of 15°or 30° before the crankshaft starts to rotate. If the propeller can be turned between the dogs with practically no friction at all further investigation is necessary. Turn propeller by hand in direction of engine rotation several times and observe engine for odd noises or excessive resistance and normal compression.

e) Check oil level and replenish as required. Prior to oil check, switch off both ignitions circuits and turn the propeller by hand in direction of engine rotation several times to pump oil from the engine into the oil tank. This process is finished when air is returning back to the oil tank and can be noticed by a murmur from the open oil tank. Prior to long flights oil should be added so that the oil level reaches the "max" mark.

f) Drain off Gascolator for water and sediment (drain until no water comes off). Then make sure drain valve is closed.

g) Check drainage hoses clamps

h) Verify all parts are fixed or locked.

i) Verify all inspection doors are closed.

6	Air induction system	*Check engine air inlet for integrity and correct fixing. The air intake filter must be free of obstructions.*
7	Left fuel tank	*Check that the refuelling port cap is properly secured, then perform the fuel tank sump drainage operating the related valve which, after operation, must be checked closed. Fuel must checked for water and sediment. Verify the tank vent outlet is clear.*
8	Landing and taxi lights	*Visual inspection*

9	Left wing leading edge	*Visual inspection. Check cabin ventilation inlet and carburettor heating inlet for condition and free of obstruction. Check stall strip.*
10	Left wing top and bottom panels	*Visual inspection*
11	Left winglet, nav and strobe lights, static discharge wick	*Check for integrity and fixing*
12	Left aileron and balance mass	*Visual inspection, remove tie-down devices and control locks if employed.*
13	Left Flap and hinges	*Visual inspection*
14	Left static port	*Remove protective cap – Visual inspection*
15	Antennas	*Check for integrity*
16	Gear pump, external power and battery compartment	*Check emergency landing gear extension system pressure (low pressure limit: 20 bar), external power and battery compartments closure.*
17	Horizontal and vertical empennage and tabs. Static discharge wicks.	*Check the actuating mechanism of control surfaces and the connection with related tabs. Check wicks for integrity. Remove tie-down device if employed.*
18	Stabilator leading edge	*Check for integrity*
19	Fuselage top and bottom skin	*Visual inspection*
20	Right static port	*Remove protective cap – Visual inspection*
21	Right Flap and hinges	*Visual inspection*
22	Right aileron and balance weight	*Visual inspection, remove tie-down devices and control locks if employed.*
23	Right winglet, nav and strobe lights, static discharge wick	*Check for integrity and fixing and lighting*
24	Right wing top and bottom panels	*Visual inspection*
25	Right wing leading edge	*Visual inspection. Check cabin ventilation inlet and carburettor heating inlet for condition and free of obstruction. Check stall strip.*
26	Right fuel tank	*Check that the refuelling port cap is properly secured, then perform the fuel tank sump drainage operating the related valve which, after operation, must be checked*

		closed. Fuel must checked for water and sediment. Verify the tank vent outlet is clear.
27	Propeller and spinner:	*The propeller blades and spinner should be free of cracks, nicks, dents and other defects and should rotate freely. Check fixing and lack of play between blades and hub.*
28	Right engine nacelle	*Apply check procedure reported in the walk-around station 5 and 6*
29	Passenger door and cabin	*Check door for integrity. Check safety belts for integrity and baggage for correct positioning and fastening. Check ditching emergency exit safety lock. Check passengers ventilation ports for proper setting.*
30	Right main landing gear	*Apply check procedure reported in the walk-around Station 2*
31	Wheel chock	*Remove if employed*
32	Bottom fuselage antennas	*Check for integrity*
33	Right cabin ram-air inlet	*Visual inspection*
34	Right Pitot tube	*Remove protective cap and check for any obstruction*
35	Nose landing gear	*Check tire status (cuts, bruises, cracks and excessive wear),slippage markers integrity, gear structure and retraction mechanism, shock absorber and gear doors attachments. There should be no sign of hydraulic fluid leakage.*
36	Radome	*Check for integrity*
37	Radome access door	*Visual inspection*
38	Left Pitot tube	*Remove protective cap and check for any obstruction*
39	Left cabin ram-air inlet	*Visual inspection*

NOTE *Avoid blowing inside Pitot-tube and inside airspeed indicator system's static ports as this may damage instruments.*

INTENTIONALLY LEFT BLANK

3.3 COCKPIT INSPECTIONS

CAUTION

Instruct passengers on how to use safety belts and normal / emergency exits. Passenger embarkation should be done, avoiding contact with hot / oily parts such as engine exhaust pipes, drainage tubes and wheel brakes, or sharp wing control surfaces edges. Do not smoke on board.

CAUTION

Clean the displays using a clean, lint-free cloth and an eyeglass lens cleaner that is specified as safe for anti-reflective coatings. Cleaners containing ammonia will harm the anti-reflective coating.

1.	Parking brake	*CHECK ENGAGED*
2.	AFM and Garmin Pilot's Guide	*CHECK on board*
3.	Weight and balance	*CHECK if within the limits*
4.	Flight controls	*Remove seat belt used as lock*
5.	PFD and MFD	*CHECK clean*
6.	Seat	*Adjust as required*
7.	Seat belt	*Fastened*
8.	Passenger briefing	*Completed*
9.	Doors	*CLOSED AND LOCKED*
10.	Landing gear control lever	*CHECK DOWN*
11.	Breakers	*All IN*
12.	MASTER SWITCH	*ON*
13.	Fuel quantity	*CHECK*
14.	RH fuel selector	*RIGHT*
15.	LH fuel selector	*LEFT*
16.	RH Electrical Fuel Pump	*ON, check fuel pressure gauge correct operation.*
17.	RH Electrical Fuel pump	*OFF, check pressure decreased at zero*
18.	LH Electrical Fuel Pump	*ON, check fuel pressure gauge correct operation.*
19.	LH Electrical Fuel pump	*OFF, check pressure decreased at zero*
20.	Strobe light	*ON*
21.	Landing gear lights	*TEST*
22.	ELT	*CHECK set to ARM*
23.	Fire detector	*TEST*
24.	Engine levers friction	*Adjust if required*
25.	Flight controls	*CHECK free*
26.	Alternate static port	*CHECK closed*

27.	Cabin heat	*CLOSED*
28.	Flaps	*Operate control to FULL position. Verify extension. Retract flaps.*
29.	Pitch trim control	*Set to neutral position.*
30.	Rudder trim control	*Set to neutral position.*
31.	Eng. Starting Battery Voltmeter (if installed)	*Check 12 to 14 Volt*

INTENTIONALLY LEFT BLANK

3.4 ENGINE STARTING

CAUTION

Avionics switches must be set OFF during engine starting to prevent avionic equipment damage.

1	Start clearance	*Obtain if needed*
2	CHRONOMETER	*START*

Right engine starting

1	RH Throttle lever	*IDLE*
2	RH Carburetor heat	*OFF*
3	RH Propeller Lever	*FULL FORWARD*
4	RH Choke	*ON if required*

NOTE

Cold engine
Throttles idle (fully closed), chokes fully opened.
Soon after starting, advance the throttle to let the propeller reach 800 RPM and slowly close the choke. Keep engine at 900 RPM for warm up period.

Hot engine
Park the aircraft with the nose pointing into wind in order to aid cooling.
Keep chokes closed and slowly open the throttles one inch while cranking.

Flooded Engine after engine start failure
Keep chokes closed, open throttle fully and start the engine, then quickly reduce throttles to idle

5	RH Electrical Fuel pump	*ON, check advisory light ON and positive fuel press build up*
6	STROBES	*ON*
7	RH engine propeller zone	*CHECK free*
8	RH ignitions switches	*BOTH ON*

WARNING

Ensure that the area around engine propeller disc is clear from people and obstacles. Call out for propeller free.

9	RH start pushbutton	*PUSH*
10	RH engine oil gauge	*CHECK if increasing within 10 sec. (max 7 bar in cold operation)*
11	RH Throttle lever	*Advance to reach 1200 RPM*
12	RH Choke	*OFF*
13	RH Field	*ON*
14	RH Avionics	*ON*
15	RH Cross bus	*ON*

16	RH Ammeter	*CHECK Amps positive*
17	RH Voltmeter	*CHECK 12 to 14 Volt*
18	Electric fuel pump	OFF

Left engine starting

1	LH Throttle lever	*IDLE*
2	LH Carburetor heat	*OFF*
3	LH Propeller Lever	*FULL FORWARD*
4	LH Choke	*ON if required*
5	LH Electrical Fuel pump	*ON, check advisory light ON and positive fuel press build up*
6	LH engine propeller zone	*CHECK free*
7	LH ignitions switches	*BOTH ON*

WARNING

Ensure that the area around engine propeller disc is clear from people and obstacles. Call out for propeller free.

8	LH start pushbutton	*PUSH*
9	LH engine oil gauge	*CHECK if increasing within 10 sec. (max 7 bar in cold operation)*
10	LH Throttle lever	*Advance to reach 1200 RPM*
11	LH Choke	*OFF*
12	LH Field	*ON*
13	LH Avionics	*ON*
14	LH Cross bus	*ON*
15	LH Ammeter	*CHECK Amps positive*
16	LH Voltmeter	*CHECK 12 to 14 Volt*
17	LH Electrical fuel pump	*OFF*

3.5 BEFORE TAXIING

1	Let the engines warm up to a minimum oil temperature of 50°C at 1200 RPM	
2	Nav , Taxi and Landing lights	*ON*
3	Transponder	*Stand-by*
4	Passengers and crews seat belts	*Fastened*
5	Passengers and crews headphones	*Set as required*

3.6 TAXIING

NOTE *Ensure that the main and passengers' doors warning lights are turned off.*

1	LH/RH Fuel Selector	*As required*
2	LH and RH fuel pressure	*Monitor*
3	Parking Brake	*RELEASE*
4	Flight instruments	*CHECK*
5	Engine instruments	*CHECK*
6	Altimeter	*SET both and crosscheck* *max difference 150 ft*
7	Brakes	*TEST*

3.7 PRIOR TO TAKEOFF

1	Parking Brake	*ENGAGED*
2	RH Fuel Selector	*RIGHT*
3	LH Fuel Selector	*LEFT*
4	LH and RH fuel pressure	*CHECK*
5	LH and RH Engine parameters checks:	

- Oil temperature: *90° –';110° C (or 50° + 130 ° C, if MOD2006/002 is applied).*
- CHT / CT: *50° –';135° / 120° C*
- Oil pressure: *2-5 bar (above 1400 RPM): 0.8 bar (below 1400 RPM)*
- Fuel pressure: *2.2 – 5.8 psi (0.15 - 0.40 bar)*

  **2.2 – 7.26 psi (0.15 – 0.50 bar)*

**applicable for fuel pump part no.893110 and no.893114*

6	LH and RH Generator lights	*CHECK BOTH OFF*
7	LH and RH Propeller Lever	*FULL FORWARD*
8	LH and RH Throttle Lever	*1650 RPM*
9	RH Ignitions switches	Set L / R / BOTH *(RPM drop with single ignition circuit selected must not exceed 130 prop's RPM; maximum RPM difference by use of either circuits LEFT or RIGHT cannot overcome 50 RPM)*
10	RH Propeller Lever	*GOVERNOR CHECK* *a) Reduce prop speed to 1200 RPM;* *b) move propeller lever back to full forward position;* *c) repeat a) and b) 3 times;* *d) verify that the governor closely and firmly controls the RPM;* *e) verify that 1650 prop RPM are restored with prop lever in full forward position.*

NOTE *Do not cause the propeller speed drop below 1150 RPM in any case.*

11	RH Carburettor heat	*ON, verify propeller RPM decreasing about 100 RPM*
12	RH Carburettor heat	*OFF*
13	RH engine instruments	*CHECK parameters if within green arcs*
14	LH Ignitions switches	Set L / R / BOTH *(RPM drop with single ignition circuit selected must not exceed 130 prop's RPM; maximum RPM difference by use of either circuits LEFT or RIGHT cannot overcome 50 RPM)*

15	LH Propeller Lever	*GOVERNOR CHECK* *a) Reduce prop speed to 1200 RPM;* *b) move propeller lever back to full forward position;* *c) repeat a) and b) 3 times;* *d) verify that the governor closely and firmly controls the RPM;* *e) verify that 1650 prop RPM are restored with prop lever in full forward position.*

NOTE *Do not cause the propeller speed drop below 1150 RPM in any case.*

16	LH Carburettor heat	*ON, verify propeller RPM decreasing about 100 RPM*
17	LH Carburettor heat	*OFF*
18	LH engine instruments	*CHECK parameters if within green arcs*
19	LH and RH Fuel quantity indicator	*CHECK consistent with fuel plan*
20	Flaps	*T/O or as required (see Section 5, Take OFF performances)*
21	Pitch trim and rudder trim	*SET neutral position*
22	Flight controls	*Check free*
23	Seat belts fastened and doors closed and locked	*CHECK*

3.8 LINE-UP

1	Parking Brake	*RELEASE, check full in*
2	Annunciator window	*CHECK cautions and warnings OFF*
3	RH Fuel Selector	*RIGHT*
4	LH Fuel Selector	*LEFT*
5	Pitot heat	*as required*
6	XPDR	*SET ALT*
7	Magnetic compass	*CHECK*
8	AHRS	*CROSS CHECK*

3.9 TAKEOFF AND CLIMB

1	Landing light	*ON*
2	LH and RH Electrical Fuel pump	*BOTH ON*
3	Carburettors heat	*CHECK OFF*
4	LH and RH Propeller Lever	*FULL FORWARD*
5	LH and RH Throttle Lever	*FULL POWER*
6	Engines instruments	*Parameters within green arcs*
7	Rotation speed	

MTOW 1180kg	**MTOW 1230 kg**
Vr = 64 KIAS	*Vr = 65 KIAS*

8	Apply brakes to stop wheel spinning	
9	Landing gear control knob	*UP: check green lights and TRANS light turned OFF within about 20"*
10	Landing and taxi lights	*OFF above 10000 ft*
11	LH and RH Propeller Lever	*Set max cont power at* safe altitude

CAU-TION

Max take off power must be limited to 5 minutes. Reduce Throttles MAP power before retracting Propeller to 2200 RPM or below.

12	LH and RH Electrical Fuel pump	*BOTH OFF*

NOTE

It is recommended to retract landing gear when a positive climb rate is ensured at the applicable best speed (V_Y or V_X as necessary).
It has been demonstrated that best climb rate is always obtained with flaps in UP position: refer to Section 5, "Take off rate of climb" and "Enroute rate of climb" tables.
Noteworthily best climb gradient speed (V_X)flaps UP is lower than best climb speed (V_X)flaps T/O up to 6000 ft (density altitude).Refer to Section 5, "Best climb gradient speed" table.

3.10 CRUISE

1 LH and RH Propeller Lever *SET to 1900-2250 RPM*

CAUTION

Throttles MAP decrease should be made before propeller speed reduction below 2200 RPM, as, contrariwise, Propeller Lever increase RPM should be set before engine Throttle Levers are advanced.

2 Engine parameters check (LH and RH)

- Oil temperature: *90° – 110° C*
  (or 50° - 130 ° C, if MOD2006/002 is applied).
- CHT/CT: *50°– 135° / 50° - 120° C*
- Oil pressure: *2 - 5 bar.*
- Fuel pressure: *2.2 – 5.8 psi*
  **2.2 – 7.26 psi (0.15 – 0.50 bar)*

**applicable for fuel pump part no.893110 and no.893114*

3 Carburettor heat as needed *(see also instructions addressed on Section 3.*

WARNING

Deselect and do not use Auto Pilot if possible icing condition area is inadvertently entered.

4 Fuel balance and crossfeed *check as necessary*

NOTE

To evaporate possibly accumulated condensation water, once per flight day (for approximately 5 minutes) 100° C (212° F) oil temperature must be reached.

3.11 TURBULENT AIR OPERATION

In keeping with good operating practice used in all aircraft, it is recommended that when turbulent air is encountered or expected, the airspeed be reduced to maneuvering speed to reduce the structural loads caused by gusts and to allow for inadvertent speed build-ups, which may occur as a result of the turbulence or of distractions caused by the conditions.

3.12 DESCENT AND APPROACH

1	Propellers	*As required*
NOTE	*In order to control engine cooling and life, it is preferable to descend with power above idle and RPM lower than full continuous.*	
2	Carburettors heat	*As required*
3	Altimeter setting	*QNH set and crosscheck*
4	Rear passengers seats	*Set at full aft position*

3.13 BEFORE LANDING

1	Rear passengers seats	*Seats set at full aft and lower position*
2	LH and RH Electrical Fuel pump	*BOTH ON*
3	On downwind leg:	*Flaps T/O*
4	Speed below applicable VLO/VLE	*Landing gear control knob - DOWN – Check green lights ON*
5	Carburettors heat	*CHECK OFF*
6	LH and RH Propeller Lever	*FULL FORWARD*
7	On final leg: speed below 93 KIAS	*Flaps FULL*
8	Final Approach Speed	
9	Landing and taxi light	*ON*
10	Touchdown speed	*65 KIAS*

MTOW 1180kg	MTOW 1230 kg
V_{FE}= *119KIAS*	V_{FE}=*122KIAS*

MTOW 1180kg	MTOW 1230 kg
V_{APP}= *70KIAS*	V_{APP}=*71KIAS*

3.14 BALKED LANDING/MISSED APPROACH

1	LH and RH Propeller Lever	*FULL FORWARD*
2	LH and RH Throttle Lever	*FULL POWER*

CAUTION *Propeller Lever increase to max RPM should be attained before engine Throttle Levers are advanced to max take off power. Max take off power must be limited to 5 minutes.*

3	Flaps	*T/O*
4	Speed	*Keep over 62 KIAS, climb to V_Y or V_X as applicable*
5	Landing gear	*UP as positive climb is achieved*
6	Flaps	*UP*

NOTE *It is recommended to retract landing gear when a positive climb rate is ensured at the applicable best speed (V_Y or V_X as necessary).*
It has been demonstrated that best climb rate is always obtained with flaps in UP position: refer to Section 5, "Take off rate of climb" and "Enroute rate of climb" tables.
Noteworthily best climb gradient speed (V_X)flaps UP is lower than best climb speed (V_X)flaps T/O up to 6000 ft (density altitude).Refer to Section 5, "Best climb gradient speed" table.

3.15 AFTER LANDING

1	LH and RH Electrical Fuel pump	*BOTH OFF*
2	Flaps	*0°*
3	Pitot Heat	*OFF*
4	Landing light	*OFF when required*

3.16 PARKING/SHUT DOWN

NOTE *It is always suggested to park the aircraft with the nose pointing into wind to improve cooling after shut down.*

1	Parking brake	*Engage*
2	Taxi light	*OFF*
3	Engines	*Allow for cooling down 1 minute at idle power*
4	Flaps	*Check UP*
5	Trims	*Check neutral*

NOTE *Ensure the engine is at its lowest possible idle speed before selecting ignitions off.*

6	Ignition switches	*Turn OFF one at a time*
7	LH and RH AVIONIC BUS	*OFF*
8	LH and RH CROSS BUS	*OFF*
9	LH/RH Field	*OFF*
10	All external lights switches	*OFF*
11	Master Switch	*OFF*
12	Emg Batt / Emg cockpit light / Emg ADI switches	*Check OFF*

WARNING *Before disembarkation verify propellers are fully stopped.*

CAUTION *Instruct passengers to fully open pax door (against nacelle stop) and depart alongside aircraft fuselage, avoiding contact with hot / oily parts such as engine exhaust pipes, drainage tubes and wheel brakes, or sharp wing control surfaces edges.*

CAUTION *Crew should avoid propeller disc area crossing while proceeding alongside a fully opened pilot's door (up to 110°).*

3.17 POSTFLIGHT CHECKS

1	Protective cover for Pitot tubes, stall warning and static port plugs.	*Install*
2	Lock one control wheel with safety belt.	
3	Wheel chocks	*Place under MLG*
4	Aileron lock	*Place and tighten*
5	Pilot and passengers doors.	*Close and latch*

4. ADDITIONAL GUIDANCE FOR RNAV

Experience of RNAV systems, and Flight FMS in general, has identified the pitfalls of way-point entry error at the receiver as well as inaccuracies and errors in the database itself.

Research and experience have both shown that human error, often the result of a lack of familiarity with the airborne equipment, represents the major hazard in operations using RNAV systems. Therefore, it is imperative that pilots understand their system thoroughly and are able to determine whether it is safe to proceed.

This requires robust procedures, which check for possible errors in the computer database, monitor continued performance of the RNAV systems and enable pilots to identify and avoid not only their own mistakes but also errors in the information presented to them.

Flight planning on RNAV routes should include the following recommendation.

- During the pre-flight planning phase, given a GPS constellation of 23 satellites or less (22 or less for GPS stand-alone equipment that incorporate pressure altitude aiding), the availability of GPS integrity (RAIM) should be confirmed for the intended flight (route and time). This should be obtained from a prediction program either ground-based, or provided as an equipment function, or from an alternative method acceptable to the Authority;
- Where a navigation data base is installed, the data base validity (current AIRAC cycle) should be checked before flight;
- Traditional navigation equipment (e.g. VOR, DME and ADF) should be selected to available aids so as to allow immediate cross-checking or reversion in the event of loss of GPS navigation capability.

1) *Pre-flight Planning*

During the pre-flight planning phase, the availability of the navigation infrastructure, required for the intended operation, including any non-RNAV contingencies, must be confirmed for the period of intended operation. Availability of the onboard navigation equipment necessary for the route to be flown must be confirmed. The onboard navigation database must be appropriate for the region of intended operation and must include the navigation aids, waypoints, and coded terminal airspace procedures for the departure, arrival and alternate airfields.

Where the responsible airspace authority has specified in the AIP that dual PRNAV systems are required for specific terminal P-RNAV procedure, the availability of dual P-RNAV systems must be confirmed. This typically will apply where procedures are effective below the applicable minimum obstacle clearance altitude or where radar coverage is inadequate for the purposes of supporting P-RNAV. This will also take into account the particular hazards of a terminal area and the feasibility of contingency procedures following loss of P-RNAV capability.

RAIM availability must be confirmed with account taken of the latest information

2) *Departure*

At system initialisation, the flight crew must confirm that the navigation database is current and verify that the aircraft position has been entered correctly. The active flight plan should be checked by comparing the charts, SID or other applicable documents, with the map display. This includes confirmation of the waypoint sequence, reasonableness of track angles and distances, any altitude or speed constraints, and, where possible, which waypoints are fly-by and which are fly-over. If required by a procedure, a check will need to be made to confirm that updating will use a specific navigation aid(s), or to confirm exclusion of a specific navigation aid. A procedure shall not be used if doubt exists as to the validity of the procedure in the navigation database

The creation of new waypoints by manual entry into the RNAV system by the flight crew is not permitted as it would invalidate the affected P-RNAV procedure.

Route modifications in the terminal area may take the form of radar headings or 'direct to' clearances and the flight crew must be capable of reacting in a timely fashion. This may include the insertion in the flight plan of waypoints loaded from the database.

During the procedure and where feasible, flight progress should be monitored for navigational reasonableness, by cross-checks, with conventional navigation aids using the primary display

3) *Arrival*

Prior to the arrival phase, the flight crew should verify that the correct terminal procedure has been loaded. The active flight plan should be checked by comparing the charts with the map display. This includes confirmation of the waypoint sequence, reasonableness of track angles and distances, any altitude or speed constraints, and, where possible, which waypoints are fly-by and which are fly-over. If required by a procedure, a check will need to be made to confirm that updating will exclude a particular navigation aid. A procedure shall not be used if doubt exists as to the validity of the procedure in the navigation database.

Note: as a minimum, the arrival checks could be a simple inspection of a suitable map display that achieves the objectives of this paragraph.

The creation of new waypoints by manual entry into the RNAV system by the flight crew would invalidate the P-RNAV procedure and is not permitted.

Where the contingency to revert to a conventional arrival procedure is required, the flight crew must make the necessary preparation.

During the procedure and where feasible, flight progress should be monitored for navigational reasonableness by cross-checks with conventional navigation aids using the primary display

Route modifications in the terminal area may take the form of radar headings or 'direct to' clearances and the flight crew must be capable of reacting in a timely fashion.

Although a particular method is not mandated, any published altitude and speed constraints must be observed.

In the event that either the GPS or the EGNOS signal is not available at the destination, by the nature of the system, and its susceptibility to interference, there exists the possibility that it

will also be unavailable over a wide area. Therefore, it is probable that the signal will also be unavailable at a nearby diversion aerodrome.

Notwithstanding any normal operational requirements for the identification of an alternate aerodrome, where a RNAV approach is to be flown in conditions where a visual approach will not be possible; pilots should always ensure that either:

1) A different type of approach system is available at the destination, not dependent on GPS data and for which the weather is forecast to be suitable to enable a landing to be made from that approach, or;
2) There is at least one alternate destination within range, where a different type of approach system is available, which is not dependent on GPS data and for which the weather is forecast to be suitable to enable a landing to be made from that approach.

4.1 APPROACH APPLICATIONS

NOTE

When GPS is not approved for the selected final approach course, the message "NOT APPROVED FOR GPS" is displayed. GPS provides guidance for the approach, but the HIS must be switched to a NAV receiver to fly the final course of the approach

NOTE

If certain GPS parameters (SBAS, RAIM, etc.) are not available, some published approach procedures for the desired airport may not be displayed in the list of available approaches.

An Approach Procedure (APPR) can be loaded at any airport that has one available, and provides guidance for non-precision and precision approaches to airports with published instrument approach procedures.

NOTE

Only one approach can be loaded at a time in a flight plan. If an approach is loaded when another approach is already in the active flight plan, the new approach replaces the previous approach. The route is defined by selection of an approach and the transition waypoints.

Whenever an approach is selected, the choice to either "load" or "activate" is given. "Loading" adds the approach to the end of the flight plan without immediately using it for navigation guidance. This allows continued navigation via the intermediate waypoints in the original flight plan, but keeps the procedure available on the Active Flight Plan Page for quick activation when needed. "Activating" also adds the procedure to the end of the flight plan but immediately begins to provide guidance to the first waypoint in the approach.

When selecting an approach, a "GPS" designation to the right of the procedure name indicates the procedure can be flown using the GPS receiver. Some procedures do not have this designation, meaning the GPS receiver can be used for supplemental navigation guidance only.

NOTE

If the GPS receiver cannot be used for primary guidance, the appropriate navigation receiver must be used for the selected approach (e.g., VOR or ILS). The final course segment of ILS approaches, for example, must be flown by tuning the NAV receiver to the proper frequency and selecting that NAV receiver on the CDI

The G950 SBAS GPS allows for flying LNAV and LPV approach service levels according to the published chart.

A sample of how the active approach service level is annunciated on the HSI is shown in the following table:

HSI Annunciation	Description	Example on HSI
LNAV	RNAV GPS approach using published LNAV minima	***Approach Service Level***
LPV (available only if SBAS available)	RNAV GPS approach using published LPV minima	

Before reaching the IAF, the flight crew should verify that the correct procedure has been loaded into the receiver's route or flight plan. A comparison with the approach chart should be made including the following:

- The waypoint sequence.
- Reasonableness of the tracks and distances of the approach legs, accuracy of the inbound course and mileage of the FAS.
- Verify from the charts, map display or CDU, which waypoints are fly-by and which are fly-over.
- Check any map display to ensure the track lines actually 'fly-over' or 'fly-by' the respective waypoints in the procedure.

By the time the aircraft reaches the IAF the pilot should have completed the above and been cleared for the approach. Also, the approach must have been activated in the receiver at least by this time.

Approach Applications which are classified as RNP Approach (APCH) in accordance with ICAO Doc 9613 Performance Based Navigation (PBN) Manual (and ICAO state Letter SP65/4-10/53) give access to minima (on an instrument approach procedure) designated as:

LNAV (Lateral Navigation)

This is a Non-Precision or 2D Approach with Lateral only navigation guidance provided by GNSS and an Aircraft Based Augmentation System (ABAS). Receiver Autonomous

Integrity Monitoring (RAIM) is a form of ABAS. Lateral guidance is linear with accuracy to within +/- 0.3 NM parallel to either side of the final approach track.

LPV (Localiser Performance with Vertical Guidance)

This is an Approach Procedure with Vertical Guidance. The Lateral and Vertical guidance is provided by GPS and SBAS. Lateral and vertical guidance are angular with increasing sensitivity as the aircraft progresses down the final approach track; much like an ILS indication. LPV approach and annunciation on HSI is available only is SBAS available.

CAUTION

Before selecting a LPV approach, make sure SBAS is indicated ACTIVE in the GPS status box on AUX-GPS STATUS page on MFD.

If DISABLED highlight the appropriate SBAS SELECTION Box under SBAS softkey under AUX-GPS Status Page on MFD

NOTE

Should SBAS signal be lost, augmentation is lost. It may be possible to continue with LNAV only but this is reliant on the availability of RAIM.

NOTE: The instrument approach procedures associated with RNP APCH are entitled RNAV (GNSS) to reflect that GNSS is the primary navigation system. With the inherent onboard performance monitoring and alerting provided by GNSS, the navigation specification qualifies as RNP, however these procedures pre-date PBN, so the chart name has remained as RNAV.

Missed approach procedures

Before commencing an RNAV (GNSS) missed approach, a MAP should be possible without reference to GPS derived navigation so that, in the event of a loss of GPS accuracy or loss of integrity during the approach, a safe return to above Minimum Sector Altitude can be made.

This may be possible by dead reckoning (DR) navigation but where this is not possible and the MAP requires reference to terrestrial navigation aids, these must be available, tuned and correctly identified before passing the IAF and remain available throughout the approach.

Reasons for a missed approach are many and if GPS information remains available for the MAP, the pilot must be able to sequence the system correctly past the MAP, in order to follow the published MAP correctly.

Pilots should be fully competent in the necessary selection routines required by their own equipment, in order to transition to the MAP and preserve accurate navigation throughout.

When GPS navigation is NOT available for the MAP, it may be necessary to reset the display function of the HSI/CDI to disengage GPS information and regain VOR/LOC display. Pilots must be fully conversant with navigation display selections in order safely to follow the MAP.

Abnormal procedures for approaches

As the aircraft approaches the FAF (LNAV Only, without SBAS), the receiver automatically perform a final RAIM prediction for the approach. The receiver will not enter the approach mode if this RAIM prediction is negative. In this case, the approach should be discontinued.

However, this RAIM check assumes availability of the full constellation and will not take account of scheduled interruptions or failures. This can lead to a successful RAIM prediction at this point when the RAIM function itself is not available.

If RAIM is lost after passing the FAF the equipment should continue to provide navigation, where possible for five minutes, before giving a RAIM loss indication and this should be enough to complete the approach.

Should RAIM detect an out of tolerance situation, a warning will be given and a missed approach should be initiated immediately

The approach should always be discontinued:

(a) If the receiver fails to engage the correct approach mode or;
(b) In case of Loss Of Integrity (LOI) monitoring or;
(c) Whenever the HSI/CDI indication (or GP indication where applicable) exceeds half scale displacement or;
(d) If a RAIM (or equivalent) warning is activated or;
(e) If RAIM (or equivalent) function is not available and annunciated before passing the FAF.

4.2 PBN (RNAV & RNP) OPERATIONAL ELIGIBILITY

The Garmin GNSS navigation system as installed in this airplane is approved for navigation using GPS and SBAS (within the coverage of a Satellite Based Augmentation System complying with ICAO Annex 10) for IFR en- route, terminal area, precision and non-precision approach operations.

Both GNSS receivers are required to be operating and receiving usable signals except for routes requiring only one Long Range Navigation sensor.

The G950 System has been shown to be eligible for:

- B-RNAV (RNAV-5)
- RNAV1 / P-RNAV (RNP-1) Enroute and Terminal navigation
- RNP APCH LNAV (does not include APV BARO-VNAV operation which is not cleared)
- LPV with SBAS

provided that the G950 is receiving usable navigation information from at least one GPS receiver.

5. GROUND TOWING, PARKING AND MOORING

5.1. TOWING

CAUTION

When the a/c is moved on the ground, the Master Switch must be turned ON until the a/c is parked.

To tow the aircraft it is necessary to use a metal stiff bar connected to the nose gear.

WARNING

Do not turn nose wheel above 20° either side of center: greater steering angles can damage the wheel stop. The tow bar must be removed before engines starting.

5.2. PARKING

General

Under normal weather conditions, the airplane may be parked and headed in a direction that will facilitate servicing without regard to prevailing winds. Ensure that it is sufficiently protected against adverse weather conditions and present no danger to other aircraft.

Procedure

1. Position airplane on levelled surface, headed into the prevailing wind, if practical.
2. Engage parking brake and install control locks
3. Secure pilot control wheel by wrapping the seat belt around it.

NOTE:

Do not engage the parking brakes at low ambient temperature; accumulation of moisture may cause the brakes to freeze. In this case use wheel chocks.

In case of long time parking or overnight parking, it is recommended to moor the a/c as shown on Para. 4.3.

CAUTION

Mooring is strongly recommended when the wind is more than 15 knots and the a/c is completely refuelled.

5.3. MOORING

The aircraft is moored to insure its immovability, protection, and security under various weather conditions.

CAUTION

Mooring is strongly recommended when the wind is more than 15 knots and the a/c is completely refuelled.

Procedure

1. Position airplane on levelled surface and headed into the prevailing wind.
2. Center nose wheel, engage parking brake and/or use the wheel chocks.

NOTE: *Do not engage the parking brakes at low ambient temperature; accumulation of moisture may cause the brakes to freeze. In this case use wheel chocks.*

3. Secure pilot control wheel by wrapping the seat belt around it
4. Assure flaps are retracted
5. Electrically ground airplane, by connecting ground cable to the engine muffle
6. Install control locks and protective plugs.
7. Close and lock cabin doors.
8. Secure tie-down cables to the nose gear leg (in correspondence of the wheel fork) and to the wings and tail cone tie-down rings at approximately 45 degree with respect to the ground. (Refer to following figures)

NOTE: *Additional preparation for high winds includes tie-down ropes from the main landing gear forks employment.*

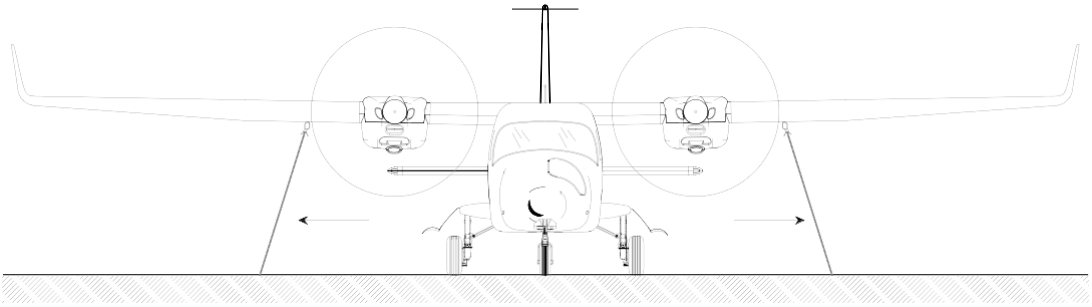

Mooring – front view

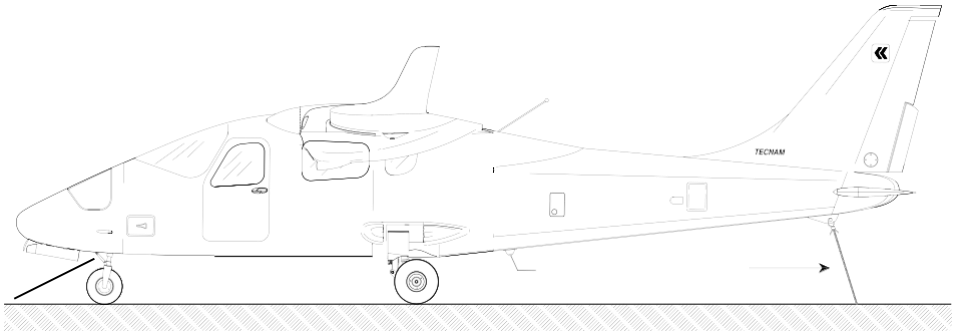

Mooring – side view

Supplement G1: pages replacement instructions

SECTION 5 - PERFORMANCES

See basic AFM - Section 5

INTENTIONALLY LEFT BLANK

Supplement G1: page replacement instructions

SECTION 6 - WEIGHT AND BALANCE

See basic AFM - Section 6

INTENTIONALLY LEFT BLANK

Supplement G1: page replacement instructions

SECTION 7 - AIRFRAME and SYSTEMS DESCRIPTION

Apply following page replacement procedure:

Supplement G1 – AIRFRAME and SYSTEMS DESCRIPTION page		Basic AFM Section 7 page
S7-37 thru S7-46	**REPLACE**	7-37 thru 7-44

INTENTIONALLY LEFT BLANK

17. INSTRUMENTS PANEL

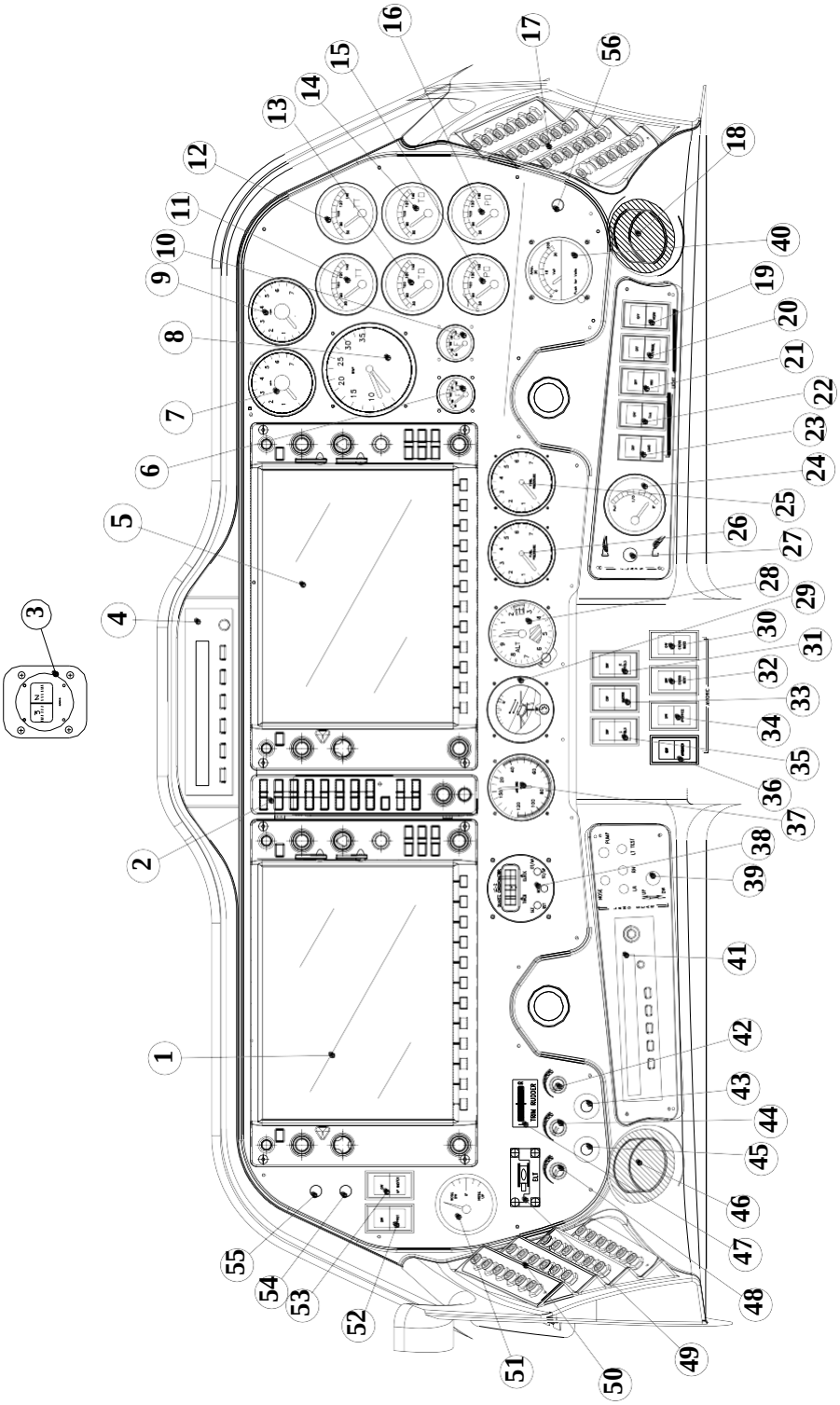

GARMIN G950 IFDS - Instruments panel (typical layout)

Item	Description
1	GDU 1040 (PFD)
2	GMA 1347
3	Compass
4	A/P Programmer/Computer
5	GDU 1040 (MFD)
6	LH fuel quantity indicator
7	LH R.P.M.
8	Dual M.A.P. indicator
9	RH R.P.M.
10	RH fuel quantity indicator
11	LH CHT
12	RH CHT
13	LH Oil Temperature
14	RH Oil Temperature
15	LH oil pressure
16	RH oil pressure
17	RH breakers panel
18	RH ram air inlet
19	Instruments light switch
20	Strobe light switch
21	Navigation light switch
22	Taxi light switch
23	Landing light switch
24	Position flaps indicator
25	RH fuel pressure
26	LH fuel pressure
27	Flap switch
28	Standby Altimeter
29	Standby Attitude indicator
30	RH Cross bus switch

Item	Description
31	RH Field
32	LH Cross bus switch
33	Master switch
34	RH Avionic switch
35	LH Field
36	LH Avionic switch
37	Standby Airspeed indicator
38	Chronometer
39	LG control knob
40	Voltammeter Indicator
41	ADF control panel
42	Cockpit light dimmer
43	Cabin heat (warm air from RH engine)
44	Avionics lights dimmer
45	Cabin heat (warm air from LH engine)
46	LH ram air inlet
47	Trim rudder indicator
48	Switches built-in lights dimmer
49	ELT Indicator
50	RH breakers panel
51	Pitch trim indicator
52	Pitot heat switch
53	A/P Master switch
54	A/P trim master switch
55	Fire Detector push-to-test
56	LH/RH Ammeter selector switch

INTENTIONALLY LEFT BLANK

18. ELECTRICAL SYSTEM

Primary DC power is provided by two engine-driven generators which, during normal operations, operate in parallel.

Each generator is rated at 14,2-14,8 Vdc, 40 Amp, and it is fitted with an integrated regulator, which acts to maintain a constant output voltage, and with an automatic overvoltage device protecting the circuits and the electric components from an excessive voltage caused by generator failures.

The power rating of the each generator is such that if one generator fails the other one can still supply the airplane equipment to maintain flight safety.

Secondary DC power is provided by a battery (lead type - Gill Teledyne G35, 12 V, 38-Ah in 20h run time) and an external DC power source can be connected to the aircraft DC distribution system.

On the instruments panel, right side, it is installed a voltmeter/ammeter. The ammeter section can indicate the current supplied by either left or right generator switching a dedicated selector.

There are five different busses (make reference to Figure 11):

- Battery bus
- LH Generator bus
- RH Generator bus
- LH Avionics bus
- RH Avionics bus

The distribution system operates as a single bus with power being supplied by the battery and both generators but it is possible to separate the left busses from the right busses when required by means of the Cross Bus switches.

All electrical loads are divided among the five busses on the basis of their importance and required power: equipment with duplicate functions is connected to separate busses.

The Battery bus, which supplies the most important loads, is energized from three sources: the battery and both generators. This allows the bus for remaining active also in case of two independent faults in the supply paths.

The following loads are connected to the battery bus:

Battery Bus
GMA 1347 Audio Panel
GIA #1
GDU PFD
Cooling Fan
Converter 1
Standby attitude indicator
LH and RH Fuel electrical pump
LH and RH Fuel pressure
LH and RH Fuel quantity
LH and RH Oil pressure
LH and RH Oil temperature
LH and RH CHT
LH and RH RPM indicator
Cabin lights
Cockpit lights
Switches built-in lights
Avionics lights
Strobe lights
Flaps
Doors pressure switches
Engine hour meter (2 units)
Turn coordinator (A/P slaved)
LG hydraulic pump
LG indicating & control system
LH and RH Fire detector
Chronometer
12V cabin electrical power sockets (2 units)

In addition, directly on the battery, the following devices are connected:

• Emergency back-up attitude indicator (RH attitude indicator – usually supplied from RH generator bus), when installed;
- Emergency Light
- Chronometer

The first two devices are controlled by the pertinent switches located on the LH breakers rack.

The other loads are so divided among following busses:

LH GEN Bus	LH Avionic Bus
Pitot heat	DME
Landing light	Transponder
Taxi light	Encoder altimeter

RH GEN Bus	RH Avionic Bus
NAV lights	ADF
Rudder trim	COM 2
Stall warning	NAV 2
RH attitude indicator	A/P (*)
	A/P Pitch Trim (*)

(*) if installed

On the central pedestal (see Figure below) there are seven switches disposed on two rows: on the first row there is the MASTER SWITCH which allows for connecting, through the battery relay, the battery to the battery bus.

LH and RH FIELD switches control the pertinent generator: setting the switch to OFF puts the pertinent generator off-line.

In correspondence of the second row there are 4 switches LH/RH AVIONIC and LH/ RH CROSS BUS.

Central pedestal switches console

The first two allow, through a relay, for cutting off the power supply to the pertinent avionic bus.

The second ones allow, through a relay, for realizing the parallel connection between the pertinent generator bus and the battery bus. Setting these ones to OFF,

the pertinent generator bus (and related avionic bus supplied) is separated from the battery bus and from opposite generator bus.

When both generators are correctly operating and all above mentioned switches are in ON position, all the busses are connected to the generators.

The ignition switches, two for each engine and grouped on the over head panel, are instead independent from the airplane electrical system (generation and distribution); they only control and open the engine electrical circuit.

WARNING

If ignition switches are turned ON, a propeller movement can cause the engine starting with consequent hazard for people nearby.

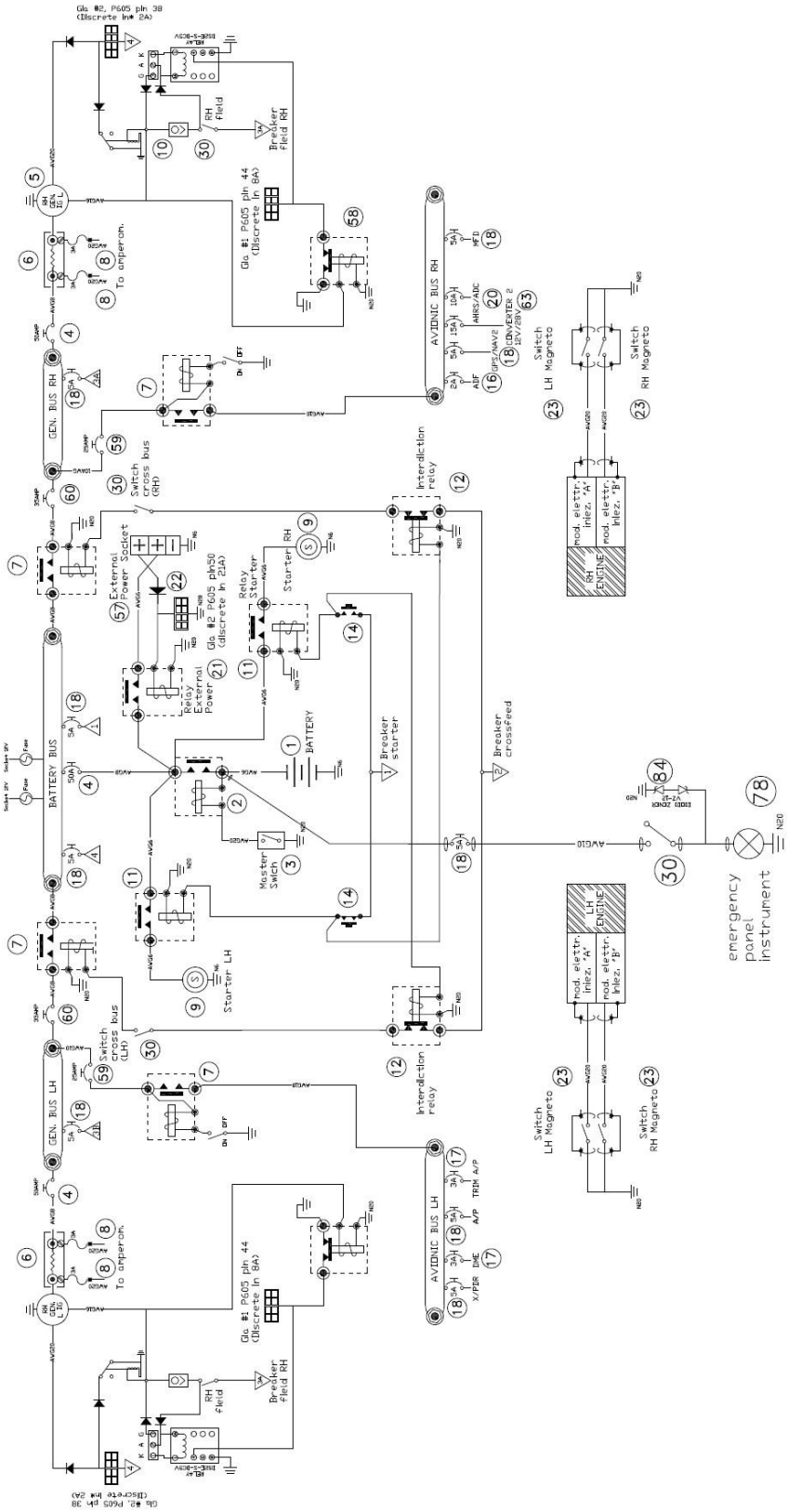

Electric system schematic

INTENTIONALLY LEFT BLANK

SUPPLEMENT NO. G2 – S-TEC FIFTY FIVE X AUTOPILOT

Record of Revisions

Rev	Revised page	Description of Revision	Tecnam Approval			EASA Approval or Under DOA Privileges
			DO	OoA	HDO	
0	all	Editorial change	A. Sabino	D. Ronca	M. Oliva	DOA privileges
1	G2-1 G2-2 G2-9	Supplement title and references to Garmin avionics have been changed.	A. Sabino	D. Ronca	M. Oliva	Approved under the authority of DOA ref. EASA.21J.335 MOD2006/357.190226

Note (*): this Supplement has been originally issued under EASA Major Design Change Approval no. 10029331 (dated 18 March 2010)

List of Effective Pages

Page	Revision	Page	Revision
G2-1	Rev 1	**G2-6**	Rev 0
G2-2	Rev 1	**G2-7**	Rev 0
G2-3	Rev 0	**G2-8**	Rev 0
G2-4	Rev 0	**G2-9**	Rev 1
G2-5	Rev 0	**G2-10**	Rev 0

INTRODUCTION

This section contains supplemental information to operate, in a safe and efficient manner, the aircraft when equipped with S-TEC Fifty Five X autopilot device interfacing Garmin integrated avionics suite.

GENERAL

The System Fifty Five X is a rate based autopilot. When in control of the roll axis, the autopilot senses turn rate, as well as closure rate to the selected course, along with the non-rate quantities of heading error, course error and course deviation indication.

When in control of the pitch axis, the autopilot senses vertical speed, acceleration, and closure rate to the selected glideslope, along with the non-rate quantities of altitude and glideslope deviation indication.

These sensed data provide feedback to the autopilot, which processes them in order to control the aircraft through the use of mechanisms coupled to the control system.

The “autotrim” function senses when the aircraft needs to be trimmed about the pitch axis, and responds by driving the trim servo in the proper direction to provide trim.

LIMITATIONS (EASA APPROVED)

NOTE

The S-TEC "Pilot's Operating Handbook Fifty Five X"(4th Edition – First Revision dated March 01, 2008 or a more updated version) must be carried in the aircraft and made available to the pilot at all time.

NOTE

In accordance with FAA recommendation (AC 00-24B), use of basic "Altitude Hold" mode is not recommended during operation in severe turbulence.

Following operating limitations shall apply when the aircraft is equipped with S-TEC Fifty Five X autopilot:

- The Autopilot is certified for Category I – ILS Approaches [with a decision height not lower than 200 feet AGL (61m)]
- Autopilot operation forbidden with flaps extended more than TO position
- During Autopilot operation, a pilot with seat belt fastened must be seated at the left pilot position
- The use of Autopilot during single engine operation is forbidden
- Autopilot DISC during take-off and landing
- Maximum speed for Autopilot operation is 135 KIAS
- Minimum speed for Autopilot operation is 85 KIAS
- Minimum altitude AGL for Autopilot operation is:
    a. Cruise and Descent: 1000 ft
    b. Climb after takeoff and not precision approach: 400 ft
    c. ILS CAT I precision approach: 200 ft

On the instrument panel, in clear view of the pilot, it is placed the following placard reminding the observance of aircraft operating limitations during Autopilot operation:

OPERATING LIMITATIONS FOR AUTOPILOT S-TEC 55X

- Category I – ILS Approaches only (200 ft AGL)
- Do not use AP with flaps extended more than TO position
- Pilot with seat belt fastened must be seated at the left pilot position during AP operation
- Do not use AP during single engine operation
- Do not use AP during take-off and landing
- AP operanting speeds range: 85 to 135 KIAS
- Min. altitude AGL for Autopilot operation is:
  Cruise and Descent: 1000 ft
  Climb after takeoff and not precision approach: 400 ft

EMERGENCY PROCEDURES

NOTE

In event of autopilot malfunction, or when the system is not performing as expected or commanded, take immediately the aircraft control disconnecting the autopilot which must be set inoperative until the failure has been identified and corrected.

Altitude lost during a pitch axis autopilot malfunction and recovery

Following table addresses the altitude lost during a pitch axis malfunction and recovery for each reported flight phase:

Flight phase	Altitude loss
Climb	200 ft
Cruise	150 ft
Descent	200 ft
Maneuvering	50 ft
Approach	80 ft

Autopilot hardover or failure to hold the selected heading

In case of Autopilot hardover or failure to hold the selected heading, apply following procedure:

Accomplish items 1 and 2 simultaneously:

1.	Airplane control wheel	*GRASP FIRMLY and OVERPOWER if necessary to regain aircraft control*
2.	AP DISC/TRIM INTR switch	*PRESS*
3.	AP MASTER SWITCH	*OFF*
4.	AP Circuit Breaker	*PULL*

CAUTION

When Autopilot is disconnected as a consequence of a malfunction, hold the control wheel firmly: it may be necessary up to 35 pounds (15.8 daN) of force on the control wheel to hold the airplane level.

NOTE

When Autopilot is disconnected, it may be necessary operate the pitch trim through either the Manual Electric Trim Switch or the Trim Wheel.

Electric trim malfunction

In case of Electric Trim malfunction (either in AP Autotrim mode or when manually operated through the Manual Electric Trim Switch), apply following procedure:

1.	AP DISC/TRIM INTR switch	*PRESS and HOLD*
2.	TRIM MASTER SWITCH	*OFF*
3.	TRIM Circuit Breaker	*PULL*
4.	AP DISC/TRIM INTR switch	*RELEASE*

CAUTION

When Autopilot is disconnected because of a pitch trim malfunction, hold the control wheel firmly: it could be necessary up to 35 pounds (15.8 daN) of force on the control wheel to hold the airplane level.

NOTE

When electric trim is disconnected, it may be necessary operate the pitch trim through the Trim Wheel.

NOTE

When electric trim is disconnected, Autopilot system can be operated both in pitch and roll modes; nevertheless, when a pitch mode (ALT HOLD, VS, GS) is engaged, the Autopilot will provide an annunciation whenever it is necessary to manually trim the aircraft about the pitch axis using the Trim Wheel. Make reference to S-TEC "Pilot's Operating Handbook Fifty Five X"(4th Edition – First Revision dated March 01, 2008 or a more updated version).

Heading information signal lost

When AP is engaged and the heading information is lost (red X on display field – make also reference to Supplement G1 – Emergency procedures), the AP must be disconnected applying following procedure:

Accomplish items 1 and 2 simultaneously:

1. Airplane control wheel	*GRASP FIRMLY and OVERPOWER if necessary to regain aircraft control*
2. AP DISC/TRIM INTR switch	*PRESS*
3. AP MASTER SWITCH	*OFF*
4. AP Circuit Breaker	*PULL*

5. Refer to other navigation means for heading information

CAUTION

When Autopilot is disconnected as a consequence of a malfunction, hold the control wheel firmly: it may be necessary up to 35 pounds (15.8 daN) of force on the control wheel to hold the airplane level.

NOTE

When Autopilot is disconnected, it may be necessary operate the pitch trim through either the Manual Electric Trim Switch or the Trim Wheel.

NORMAL OPERATIONS

Normal operating procedures, including pre-flight checks, are described on S-TEC "Pilot's Operating Handbook Fifty Five X" (4th Edition – First Revision dated March 01, 2008 or a more updated version).

Status/mode annunciations and/or visual representations are simultaneously displayed on both the Garmin avionics (AFCS Status Box and/or PFD) and the S-TEC Fifty Five X Autopilot Display.

Make reference to the applicable Garmin Avionics Pilot's Guide for Tecnam P2006T.

WARNING

The vertical speed mode is used to establish and hold a PILOT selected vertical speed. Since the autopilot receives no airspeed information, it is the responsibility of the pilot to ensure that the vertical speed selection is within the operating limits of the aircraft's capabilities. Selection of a vertical speed beyond the capability of the aircraft can create a condition of reduced air-speed, and possibly lead to a stall condition.

PERFORMANCES

S-TEC Fifty Five X Autopilot employment does not affect the aircraft performances.

WEIGHT AND BALANCE

See Section 6 of this Manual.

SYSTEMS

The System Fifty Five X Block Diagram is shown in the following figure.

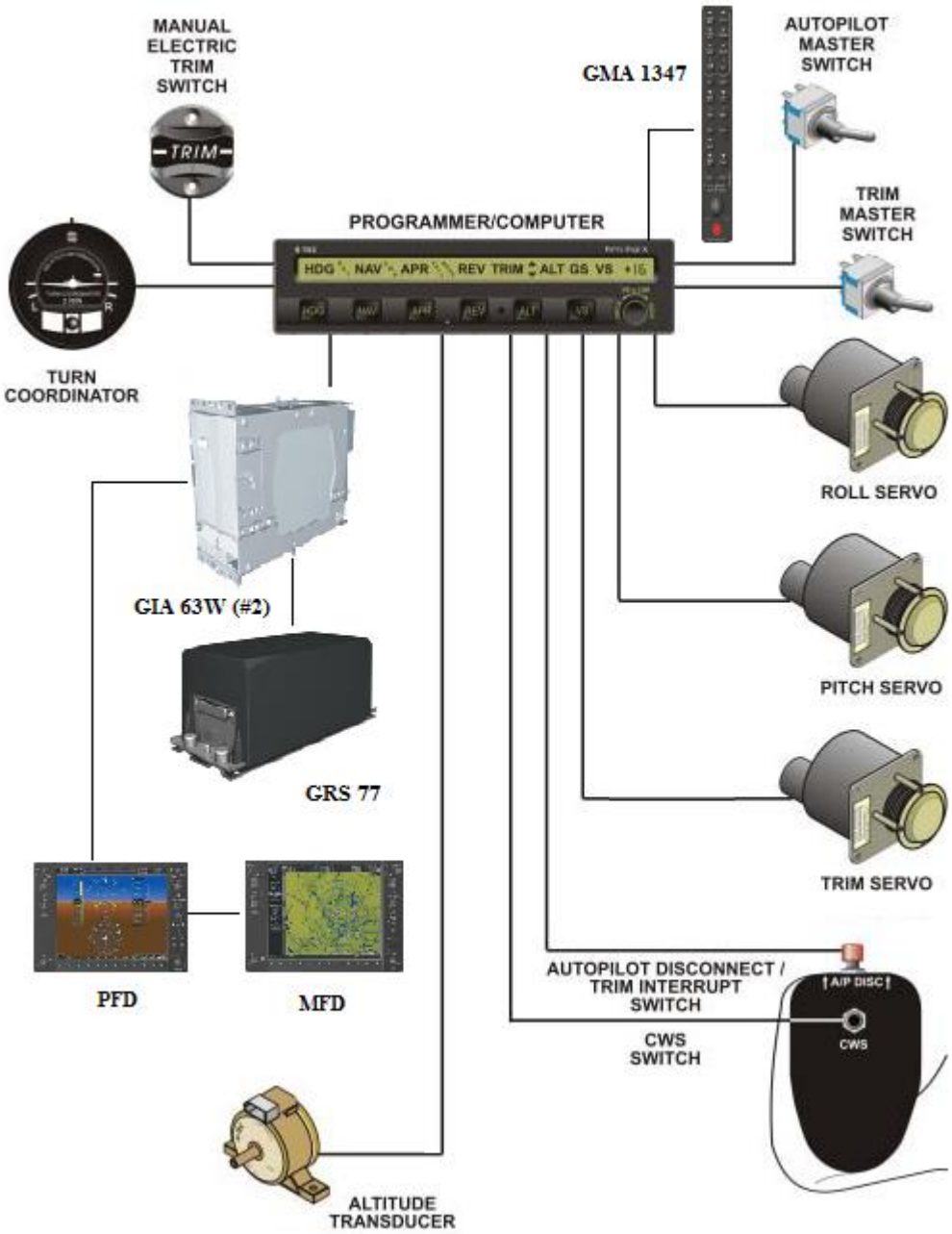

SUPPLEMENT NO. G3 – KR 87 ADF SYSTEM FOR GARMIN G950

Record of Revisions

Rev	Revised page	Description of Revision	Tecnam Approval			EASA Approval Or Under DOA Privileges
			DO	OoA	HDO	
0	all	Editorial change (*)	A. Sabino	C. Caruso	M. Oliva	DOA Privileges

Note (*): this Supplement has been originally issued under EASA Major Design Change Approval no. 10029633 (dated 8 April 2010)

List of Effective Pages

Page	Revision	Page	Revision
G3-1	Rev 0	**G3-3**	Rev 0
G3-2	Rev 0	**G3-4**	Rev 0

INTRODUCTION

This section contains supplemental information to operate, in a safe and efficient manner, the aircraft when equipped with ADF KR 87 device in conjunction with Garmin G950 system.

GENERAL

KR 87 is an ADF for navigation with respect to the Non Directional Beacon stations.

LIMITATIONS

ADF KR 87 manuals do not address operating limitations more severe than those usually applicable to the P2006T.

EMERGENCY PROCEDURES

Particular meteorological conditions can distort the equipment indications. Therefore, to avoid false indications about NDB direction, it is necessary to select ANT function in order to query the selected station and to listen to its identification code.

Near electrical interferences (electrical storms), ADF indicator tends to head toward the interferences themselves. Take into account this likelihood when the indicator heads, for example, toward highly cloudy or stormy zones.

Wrong indications could arise also during night flights, near mountainous reliefs and as effect of the coastal refraction.

NORMAL OPERATIONS

Normal operating procedures are reported on the following documents:

1) Garmin G950 Pilot's Guide for Tecnam P2006T (P/N 190-01146-00) – last issue.
2) ADF system "Pilot's guide and Reference", P/N KIKR87-PG-C - last issue.

Bearing information is displayed on the Garmin G950 PFD, to the lower sides of the HSI: the PFD softkeys BRG1 and BRG2 cycles respectively Bearing 1 and Bearing 2 Information Window through the different bearing sources, including ADF/frequency.

Pressing the ADF Key on the GMA 1347 Audio Panel turns ADF receiver audio on or off on the headset/speaker.

PERFORMANCES

ADF KR-87 employment does not affect the aircraft performances.

WEIGHT AND BALANCE

See Section 6 of this Manual.

SYSTEMS

Refer to the guide “KR-87” P/N KIKR87-PG-C for a system description. The interface with Garmin G950 is shown on the following Figure.

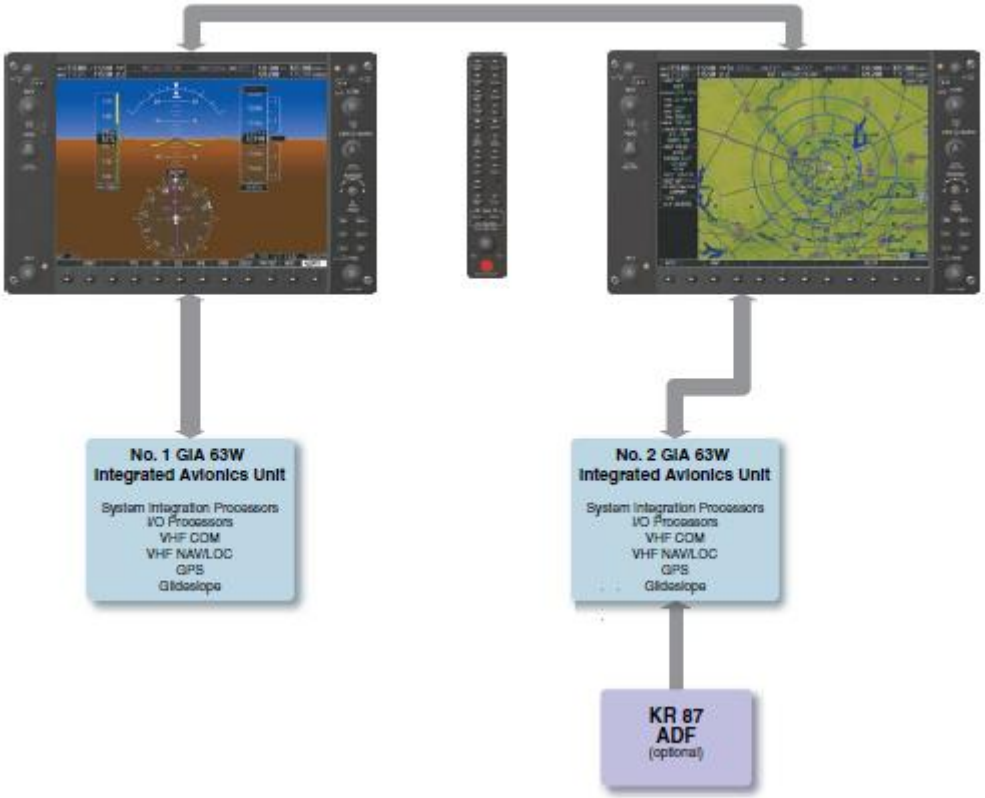

SUPPLEMENT NO. G4 – KN 63 DME SYSTEM FOR GARMIN INTEGRATED AVIONICS SUITE

Record of Revisions

Rev	Revised page	Description of Revision	Tecnam Approval			EASA Approval Or Under DOA Privileges
			DO	OoA	HDO	
0	-	See Note (*)				
1	G4-1 G4-2	Amended title and references to Garmin Integrated Avionics Suite.	A. Sabino	D. Ronca	M. Oliva	Approved under the authority of DOA ref. EASA.21J.335 MOD2006/357.190226

Note (*): this Supplement has been originally issued under EASA Major Design Change Approval no. 10029633 (dated 8 April 2010)

List of Effective Pages

Page	Revision	Page	Revision
G4-1	Rev 1	**G4-3**	Rev 0
G4-2	Rev 1	**G4-4**	Rev 0

INTRODUCTION

This section contains supplemental information to operate, in a safe and efficient manner, the aircraft when equipped with DME KN 63 device in conjunction with Garmin Integrated Avionics Suite.

GENERAL

KN 63 is a DME equipment fitted with a remote module interfacing the Garmin Integrated Avionics Suite. Indications are displayed above the PFD BRG1 Information Window.

LIMITATIONS

DME KN 63 manuals do not address operating limitations more severe than those usually applicable to the P2006T.

EMERGENCY PROCEDURES

In determined conditions, near the beacon, DME signal can be lost or distorted. Take into account this likelihood when a beacon approach is performed.

NORMAL OPERATIONS

Normal operating procedures are reported on the applicable Garmin Integrated Avionics Suite Pilot's Guide for Tecnam P2006T – last issue.

Make reference also to "KN 63 Installation Manual ", P/N 006-00176 Rev. 4 dated October 2004.

The PFD softkey DME displays the DME Tuning Window, allowing tuning and selection of the DME.

The DME Information Window is displayed above the BRG1 Information Window and shows the DME label, tuning mode (NAV1, NAV2, or HOLD), frequency, and distance. When a signal is invalid, the distance is replaced by "–.– – NM".

Pressing the DME Key on the GMA 1347 Audio Panel turns DME audio on or off on the headset/speaker.

PERFORMANCES

DME KN 63 employment does not affect the aircraft performances.

WEIGHT AND BALANCE

See Section 6 of this Manual.

SYSTEMS

Refer to the guide "KN 63 Installation Manual", P/N 006-00176 Rev. 4 dated October 2004 for a complete system description. The interface with Garmin G950 is shown on the following Figure.

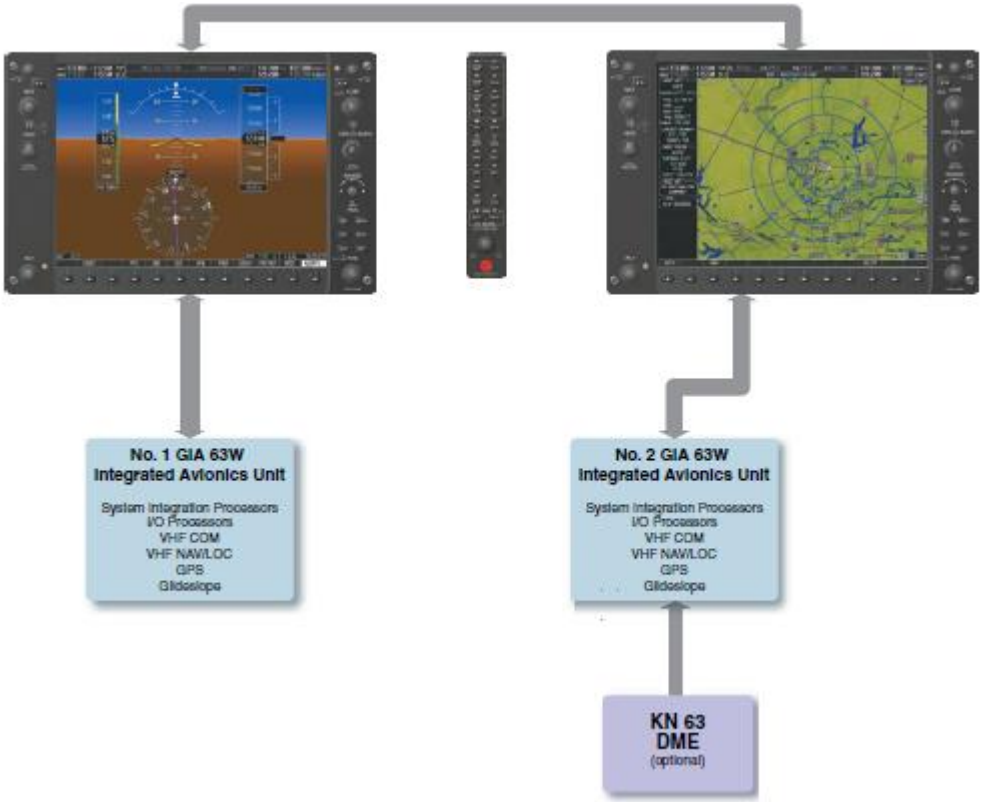

INTENTIONALLY LEFT BLANK

SUPPLEMENT NO. G5 – ENGINE STARTING BATTERY

Record of Revisions

Rev	Revised page	Description of Revision	Tecnam Approval			EASA Approval or Under DOA Privileges
			DO	OoA	HDO	
0	-	Editorial change (*)	A. Sabino	C.Caruso	M.Oliva	DOA privileges

Note (*): this Supplement has been originally issued under EASA Major Design Change Approval no. 10031750 (dated 9 September 2010)

List of Effective Pages

Page	Revision	Page	Revision
G5-1	Rev 0	**G5-3**	Rev 0
G5-2	Rev 0	**G5-4**	Rev 0

INTRODUCTION

This section contains information to operate the airplane equipped with a supplemental battery dedicated to engines starting.

GENERAL

The engine starting battery is housed in a dedicated box under the main battery box: both batteries are accessible through the inspection cap F10 on the left side of the tail cone.

LIMITATIONS

See Section 2 of this Manual.

EMERGENCY PROCEDURES

In event of the following failure conditions, addressed on Section 3 of this Manual and leading to fly without power generation system:

- **Both generators failure (Para. 3.1)**
- **Both generators overvoltage (Para 3.3)**
- **Inflight engine restart (Para 8.2)**

apply, at the end of related checklist, following procedure:

EMERG BATT switch	*ON*

WARNING

push the Emergency battery switch to ON to avoid a power generation system failure.

NORMAL OPERATIONS

During Cockpit Inspections (see Para. 3.2 – Section 4 of this Manual), perform also following check:

Eng. Starting Battery Voltmeter	*CHECK 12 to 14 Volt*

PERFORMANCES

See Section 5 of this Manual.

WEIGHT AND BALANCE

For weight and balance, make reference to Section 6 of this Manual; additionally, the equipment list reported on Para. 5 is so integrated:

EQUIPMENT LIST		AIRCRAFT S/N__	DATE:		
REF.	DESCRIPTION	P/N	INST	WEIGHT [kg]	ARM [M]
AVIONICS & MISCELLANEOUS					
A14-1	Engine Starting Battery (EnerSys SBS8)		X	2.7	3.7

SYSTEMS

When airplane embodies the design change in subject, in addition to the main battery, a dedicated engine starting battery is introduced.

The entire primary loads stand connected to the main battery itself and the engine starting battery is recharged by the generators.

This modification is transparent to the crew because it does not change deeply the usual normal and emergency procedures.

Additionally, in event of the overall loss of power generation, the starting battery can be put in parallel with the main battery by means of the EMERG BATT switch activation.

In order to allow the charging status check of the battery, a voltmeter is provided. Pushing the button close to the voltmeter, crew can read the battery status.

Both batteries are accessible through the inspection cap F10 on the left side of the tail cone.

When the design change in subject is embodied, following placards are installed on the airplane:

Description	Placard	Place
Engine starting battery voltmeter location	Eng. Starting Battery Voltmeter	Close to the voltmeter
Batteries compartment location	OPEN HERE 1/4 TURN BATTERIES INSIDE	Fuselage tail cone, left side

SUPPLEMENT NO. G6 – POWER SUPPLY FROM BUILT-IN GENERATORS

Record of Revisions

Rev	Revised page	Description of Revision	Tecnam Approval			EASA Approval or Under DOA Privileges
			DO	OoA	HDO	
0	all	Editorial change (*)	A. Sabino	C. Caruso	M. Oliva	DOA privileges

Note (*): this Supplement has been originally issued under EASA Major Design Change Approval no. 10031748, rev 1 (dated 17 November 2010)

List of Effective Pages

Page	Revision	Page	Revision
G6-1	Rev 0	**G6-4**	Rev 0
G6-2	Rev 0	**G6-5**	Rev 0
G6-3	Rev 0	**G6-6**	Rev 0

INTRODUCTION

This section contains information to operate the airplane equipped with built-in generators.

GENERAL

The Rotax engine built-in generators, one for each engine, feed two bus bars.

LIMITATIONS (EASA APPROVED)

Following limitations must apply when the built in generators are operative:

During Take-off, Climb, Landing and Single Engine operations:

LH and RH AUX FIELD switch	*BOTH OFF*

EMERGENCY PROCEDURES

In event of the following failure conditions (addressed on Section S3 of this Manual):

- **Single Engine operations**
- **Single generator failure (Para. 3.2)**
- **Single generator overvoltage (Para 3.4)**
- **Both generators failure (Para. 3.1)**
- **Both generators overvoltage (Para 3.3)**
- **Engine securing (Para. 5)**
- **Electrical system overall failure (Para. 7.1)**
- **All smoke and fire occurrences (Para 10.1 to 10.5)**

apply following procedure:

LH and RH AUX FIELD switch	*BOTH OFF*

NORMAL OPERATIONS

See Section 4 of this Manual.

PERFORMANCES

See Section 5 of this Manual.

WEIGHT AND BALANCE

See Section 6 of this Manual.

SYSTEMS

When the airplane embodies the design change in subject, the Rotax engine built-in generators are enabled in order to supply power to two bus bars.

Each built-in generator is activated by means of a switch (LH and RH AUX FIELD) located on the LH breakers rack where are located also the breakers related to the auxiliary power generation system.

LH breakers rack: built-in generators field switches and system related breakers (panel type 1)

When panel type 2 is installed (see picture below), each generator field is first excited selecting START on the toggle switch. Then, to allow power generation, toggle switch must be set to ON position.

LH breakers rack: built-in generators field switches and system related breakers (panel type 2)

For both panels, the light (switch built-in light for panel 1) indicates that the electrical power is generated.

INTENTIONALLY LEFT BLANK

SUPPLEMENT NO. G7

AFM SUPPLEMENT FOR CIS COUNTRIES OPERATORS

Record of Revisions

Rev	Revised page	Description of Revision	Tecnam Approval			EASA Approval or Under DOA Privileges
			DO	OoA	HDO	
0	-	See Note (*)				

Note (*): this Supplement has been originally issued on 12 November 2010, after EASA Third Country Validation process completion.

List of Effective Pages

Page	Revision	Page	Revision
G7-1	Rev 0	**G7-13**	Rev 0
G7-2	Rev 0	**G7-14**	Rev 0
G7-3	Rev 0	**G7-15**	Rev 0
G7-4	Rev 0	**G7-16**	Rev 0
G7-5	Rev 0	**G7-17**	Rev 0
G7-6	Rev 0	**G7-18**	Rev 0
G7-7	Rev 0	**G7-19**	Rev 0
G7-8	Rev 0	**G7-20**	Rev 0
G7-9	Rev 0	**G7-21**	Rev 0
G7-10	Rev 0	**G7-22**	Rev 0
G7-11	Rev 0	**G7-23**	Rev 0
G7-12	Rev 0	**G7-24**	Rev 0

TABLE OF CONTENTS

INTRODUCTION 3
GENERAL 3

LIMITATIONS (EASA APPROVED) 4
Approved maneuvers 4
Ambient Temperature 4
Flight Altitude 4
Airfield elevation 4
Operation from unpaved runways 4
Over-water flights 5
Flight crew 5
Other placards 6

EMERGENCY PROCEDURES 8
Smoke and fire occurrence 8
Failure of Control System 8
Loss of Stabilator Control 8
Loss of Aileron Control 9
Loss of Rudder Control 9
One engine inoperative procedures 10
Characteristic airspeeds with one engine inoperative 10
Inflight engine restart 11
Landing emergencies 12
Landing without engine power 12
Landing on the Airfield 12

NORMAL OPERATIONS 13
Cold weather operations 13
Airspeeds for normal operations 13
Aircraft walk-around 14
Cockpit inspections 15
Takeoff and climb 16
Cruise 16
Balked landing 17

PERFORMANCES 18
Takeoff performances 18
climb performance (one engine inoperative) 20

WEIGHT AND BALANCE 21
SYSTEMS 22
Instruments panel 22

INTRODUCTION

This supplement applies for CIS countries operators.

GENERAL

This supplement must be placed in EASA Approved P2006T Aircraft Flight Manual Section 9, if the airplane is certified to the CIS configuration. The information contained herein complements the basic information in the EASA Approved Aircraft Flight Manual. For limitations, procedures, and performance information not contained in this supplement, refer to the EASA Approved Aircraft Flight Manual.

LIMITATIONS (EASA APPROVED)

APPROVED MANEUVERS

Non aerobatic operations include:

- Any manoeuvre pertaining to "normal" flight
- Stalls
- Lazy eights
- Turns in which the angle of bank is not more than 60°
- Chandelle

WARNING

Acrobatic manoeuvres, including whip stalls, spins and turns with angle of bank of more than 60°, are not approved for such a category. In addition, stall with one engine inoperative is forbidden.

WARNING

Limit load factor could be exceeded by moving flight controls to maximum deflection at a speed above $V_A=V_O$ (118 KIAS, Manoeuvring Speed).

AMBIENT TEMPERATURE

Ambient temperature: from -25°C to +40°C.

FLIGHT ALTITUDE

Flight Altitude limitation: 3000 m (9800ft) and 3600 m (11800ft) for max. 30 minutes.

AIRFIELD ELEVATION

Maximum airfield elevation (Pressure Altitude): less than 2400 m (8000ft).

OPERATION FROM UNPAVED RUNWAYS

Operation from unpaved runways is limited by soil strength of 6 kg per sq. centimeter ($\sigma \geq 6 kg/cm^2$).

OVER-WATER FLIGHTS

Extended over-water flights are allowed within the limitations prescribed by CIS operational regulations.

FLIGHT CREW

Minimum permitted: 1 pilot
Maximum people on board: 4 people (including pilot)

NOTE If right control wheel is not removed, right seat may be occupied by the crew member.

OTHER PLACARDS

Description	Placard	Place
Smoking ban	NO SMOKING НЕ КУРИТЬ	Instruments panel, right side
Ditching emergency exit: opening instructions	 АВАРИЙНЫЙ ВЫХОД НА ВОДУ 1. Повернуть 2. Сильно толкнуть дверь	Ditching emergency exit handle: internal side
Ditching emergency exit: opening instructions	 АВАРИЙНЫЙ ВЫХОД НА ВОДУ 1. Повернуть 2. Сильно толкнуть дверь	Ditching emergency exit handle: external side
Door locking system: bypass instructions	 ДЛЯ АВАРИЙНОГО ДОСТУПА 1. Нажать вниз и удержать красный флажок 2. Открыть дверь	Main door and emergency exit: external side

Description	Placard	Place
Door locking system: by-pass instructions	 ДЛЯ АВАРИЙНОГО ВЫХОДА 1. Нажать вниз и удержать красный флажок 2. Открыть дверь	Main door and emergency exit: internal side
Main door: exit instructions	 ПРЕДУПРЕЖДЕНИЕ Перед открытием двери убедиться, что винт остановлен Выход в переднюю часть самолета	Main door, internal side
Emergency exit label	EMERGENCY EXIT АВАРИЙНЫЙ ВЫХОД	Emergency exit: internal and external side

EMERGENCY PROCEDURES

SMOKE AND FIRE OCCURRENCE

Use ventilation window in case of smoke in cabin for all cases.

FAILURE OF CONTROL SYSTEM

LOSS OF STABILATOR CONTROL

In case of loss of pilot side stabilator control (disconnected or jammed), apply following procedure:

1. Continue the flight at the speed of 80 - 85 KIAS due to the aircraft weight in cruise configuration.
2. Bank angle: not more than 30° during turning.
3. Control the aircraft with mechanical trim and engine power setting.

NOTE

The increase of thrust causes a nose up moment; the decrease of thrust causes a nose down moment. The control by trim operation is related to the trim position: trim UP for aircraft nose Up; trim DOWN for aircraft nose DOWN.

CAUTION

Perform approach and landing only in cruise configuration (Flap 0°).

It is necessary to move the landing gear in down position before starting the glide and to balance the aircraft with trim and thrust.

It is possible to correct the glide path by trim operation to minimize the thrust engines changes.

Only after touchdown it is possible to move the engine controls in idle position.

Land as soon as possible.

Loss of Aileron Control

In case of loss of pilot side aileron control (disconnected or jammed), apply following procedure:

1. Continue flight at the speed of 80 - 85 KIAS due to the aircraft weight in cruise configuration.
2. Control the airplane bank angle by means of the rudder.
3. Bank angle: not more than 30° during turning.
4. **Land as soon as practical.**

CAUTION

Perform approach and landing only in cruise configuration (Flap 0°).

Perform approach and landing with crosswind trend type landing.

Loss of Rudder Control

In case of loss of pilot side rudder control (disconnected or jammed), apply following procedure.

1. Continue flight at the speed of 80 - 85 KIAS due to the aircraft weight in cruise configuration.
2. Control airplane bank angle by means of ailerons.
3. Bank angle: not more than 30° during turning.
4. **Land as soon as practical.**

CAUTION

Perform approach and landing only in cruise configuration (Flap 0°).

Perform approach and landing with crosswind trend type landing.

ONE ENGINE INOPERATIVE PROCEDURES

NOTE

The ineffectiveness of one engine results in an asymmetric traction condition which tends to yaw and to bank the aircraft. In this condition it is essential to maintain the direction of flight compensating the lower traction through the operating engine and counteracting the yawing effects through the use of pedals and rudder trim. To improve the efficiency, it is preferred to bank the aircraft to the side of the operating engine by about 5°.

Depending upon the circumstances that may arise, apply the emergency procedure as below.

CHARACTERISTIC AIRSPEEDS WITH ONE ENGINE INOPERATIVE

In case of one engine inoperative condition, pilot shall take into account the airspeeds shown below:

Conditions	Speed (KIAS)
Minimum aircraft control speed with one engine inoperative and flaps set to T.O. (V_{MC})	62
Best rate-of-climb speed with flaps set to T.O. (V_Y)	70
Best rate-of-climb speed with one engine inoperative with flaps set to 0° (V_{YSE})	80 (1180kg) 78 (1080kg) 75 (980kg)

NOTE

Perform approach and landing only with flap set at 0°.

INFLIGHT ENGINE RESTART

NOTE *It is preferred to restart the engine at an altitude below 4000ft and at the suggested speed of 80 KIAS or more*

1.	Carburettor heat	*ON if required*
2.	Electrical fuel pump	*ON*
3.	Fuel quantity indicator	*CHECK*
4.	Fuel Selector	*CHECK (Crossfeed if required)*
5.	FIELD	*OFF*
6.	Ignition	*BOTH ON*
7.	Operating engine Throttle Lever	*IDLE (only if practical)*
8.	Stopped engine Throttle Lever	*IDLE*
9.	Stopped engine Propeller Lever	*FULL FORWARD*
10.	Start push-button	*PUSH*
11.	Propeller Lever	*SET at desired rpm*
12.	FIELD	*ON*
13.	Engine throttle levers	*SET as required*

NOTE *If the fuel quantity in the tank which feeds the stopped engine is low, select the opposite side fuel tank by means of the fuel selector.*

NOTE *After starter engagement during in-flight engine restart, PFD indication may be temporarily lost. PFD Attitude recovery can last up to 3-4 minutes. During attitude recovery it is necessary to maintain level straight-line flight.*

In case of unsuccessful engine restart:

1. SECURE engine (see *engine securing procedure* on Para. 5)
2. **Land as soon as practical** applying *one engine inoperative landing* procedure. See Para. 8.6

In case of successful engine restart:

1. **Land as soon as practical**

CAUTION *After engine restart, if practical, moderate propeller rpm to allow the temperatures for stabilizing in the green arcs.*

LANDING EMERGENCIES

LANDING WITHOUT ENGINE POWER

Landing on the Airfield

CAUTION

Both engines failure condition requires both propellers feathered and aircraft attitude set to maximum efficiency until the selection of the field, on which to perform an emergency landing, is made.

1.	Airspeed (VY+4kts)	84 KIAS (1180kg) *82* KIAS (1080kg) 79 KIAS (980kg)
2.	Flaps	*Only 0°*
3.	Landing gear control lever	*DOWN*

CAUTION

To shorten the landing gear extension time, evaluate the possibility to use the emergency extension control. In this way the time required to complete the extension is shorter by about 8 sec.

4.	Select landing field (check for obstacles and wind)	
5.	Safety belts	*FASTEN*

Before touch down

6.	Fuel Selector	*BOTH OFF*
7.	Electrical fuel pump	*BOTH OFF*
8.	Ignitions	*ALL OFF*
9.	MASTER SWITCHES	*ALL OFF*

WARNING

Emergency Landing outside of airfield shall be performed with landing gear retracted and starting flaps extension in FULL configuration at 50 ft of altitude. To reach the maximum gliding distance at the optimal airspeed above mentioned, and to reduce the loss of altitude during a 180° turn, turn with 30° bank angle.

NOTE

The distance covered in correspondence of the optimal speed V_Y is about 4000 meters by 1000ft of altitude.

NOTE

The loss of altitude, when a 180° turn is performed with bank angle of 30°, is about 200ft in correspondence of V_Y.

NORMAL OPERATIONS

COLD WEATHER OPERATIONS

If the aircraft is operated in cold weather conditions (from -25ºC till -5ºC) it is necessary to perform following procedures:

- Heat the cabin to +25ºC to avoid windshield frost in flight
- Heat the engines with external source to + 20º C
- Check the pressure in hydraulic system, recharge if necessary

AIRSPEEDS FOR NORMAL OPERATIONS

The following airspeeds are those which are significant for normal operations.

	FLAPS	1180kg (2600lb)
Rotation Speed (in takeoff, V_R)	T/O	**64 KIAS**
Speed over a 15 meters obstacle (V_{obs}) Take Off	T/O	**70 KIAS**
Best Angle-of-Climb Speed (V_X)	0°	**80 KIAS**
Best Rate-of-Climb speed (V_Y)	0°	**80 KIAS**
Approach speed	T/O	**90 KIAS**
Speed over a 15 meters obstacle (V_{obs}) Landing	T/O	**70 KIAS**
Final Approach Speed	FULL	**70 KIAS**
Manoeuvring speed (V_A)	0°	**118 KIAS**
Never Exceed Speed (V_{NE})	0°	**167 KIAS**

For training purposes, keep speed above following reference data before setting one engine to *zero* thrust condition (i.e. propeller lever full forward and throttle lever set at 15 mmHg MAP):

Safe single engine speed with flaps T/O (V_{SSE})	**70 KIAS**
Safe single engine speed with flaps 0° (V_{SSE})	**80 KIAS (1180kg)** **78 KIAS (1080kg)** **75 KIAS (980kg)**

AIRCRAFT WALK-AROUND

In addition to the aircraft walk-around checklist reported on basic AFM, Section 4, perform following checks:

Left and right wing leading edge	*Check stall strip.*

COCKPIT INSPECTIONS

NOTE

Make sure that passengers are familiar with the safety belts and emergency exits employment and that they do not smoke on board. Passengers boarding, paying attention to the propeller disc, is under the pilot's responsibility.

CAUTION

Clean the displays using a clean, lint-free cloth and an eyeglass lens cleaner that is specified as safe for anti-reflective coatings. Cleaners containing ammonia will harm the anti-reflective coating.

1.	Parking brake	*CHECK ENGAGED*
2.	AFM and Garmin Pilot's Guide	*CHECK on board*
3.	Weight and balance	*CHECK if within the limits*
4.	Flight controls	*Remove seat belt used as lock*
5.	PFD and MFD	*CHECK clean and set altitude displaying in meters (see G950 Pilot's Guide)*
6.	Seat	*Adjust as required*
7.	Seat belt	*Fastened*
8.	Passenger briefing	*Completed*
9.	Doors	*CLOSED AND LOCKED*
10	Landing gear control lever	*CHECK DOWN*
11	Breakers	*All ON*
12	MASTER SWITCH	*ON*
13	Fuel quantity	*CHECK*
14	RH fuel selector	*RIGHT*
15	LH fuel selector	*LEFT*
16	RH Electrical Fuel Pump	*ON, check fuel pressure gauge correct operation.*
17	RH Electrical Fuel pump	*OFF, check pressure decreased at zero*
18	LH Electrical Fuel Pump	*ON, check fuel pressure gauge correct operation.*
19	LH Electrical Fuel pump	*OFF, check pressure decreased at zero*
20	Strobe light	*ON*
21	Landing gear lights	*TEST*
22	ELT	*CHECK set to ARM*
23	Fire detector	*TEST*
24	Engine levers friction	*Adjust if required*
25	Flight controls	*CHECK free*
26	Alternate static port	*CHECK closed*
27	Cabin heat	*CLOSED*
28	Flaps	*Operate control to FULL position, verifying extension. Then retract flaps.*
29	Pitch trim control	*Set to neutral position.*
30	Rudder trim control	*Set to neutral position.*

TAKEOFF AND CLIMB

1	Call TWR for takeoff	
2	Check for clear final and wind on runway	*Direction and intensity*
3	LH and RH Electrical Fuel pump	*BOTH ON*
5	Carburettors heat	*CHECK OFF*
8	LH and RH Propeller Lever	*FULL FORWARD*
9	LH and RH Throttle Lever	*FULL THROTTLE (about 2400 ± 100 propeller rpm)*
10	Engines instruments	*Parameters within green arcs*
11	Rotation speed	*Vr = 64 KIAS*
12	Rotation and takeoff	
13	Apply slightly brakes to stop wheel spinning	
14	Landing gear control knob	*UP: check green lights and TRANS light turned OFF*
15	Speed over obstacle	*70KIAS*
16	Flaps	*0° at 300 ft (AGL)*
21	Landing and taxi lights	*OFF*
17	Establish climb rate	*Above 80 KIAS*
18	Trim adjustment	
19	LH and RH Propeller Lever	*Set at 2250 rpm (*after reaching safe altitude*)*
20	LH and RH Electrical Fuel pump	*BOTH OFF*

CRUISE

Flights in the CIS airspace are allowed only along the routes with continuous ATC monitoring using RBS mode in VHF covering zones.

1	Reach cruise altitude	
2	Set throttle and rpm as required for the cruise	
3	LH and RH Propeller Lever	*SET to 1900-2400 rpm*
4	Trim	*As required*
5	Engine parameters check (LH and RH)	

- Oil temperature: *90°÷110 ° C.*
- CHT: *90° ÷ 110 °C*
- Oil pressure: *2 - 5 bar.*
- Fuel pressure: *2.2 – 5.8 psi (0.15 - 0.40 bar)*

6 Carburettor heat as needed *(see also instructions addressed on Section 3)*

BALKED LANDING

1	LH and RH Throttle Lever	*FULL THROTTLE*
2	LH and RH Propeller Lever	*FULL FORWARD*
3	Speed	*Over 70 KIAS*
4	Flaps	*T/O*
5	Landing gear	*UP*
6	Carburettor heat	*CHECK OFF*
7	LH and RH Electrical Fuel pump	*CHECK ON*

PERFORMANCES

TAKEOFF PERFORMANCES

Takeoff ground roll

CONDITIONS:

- Flaps: T/O
- Throttle levers: FULL FORWARD
- Runway: paved

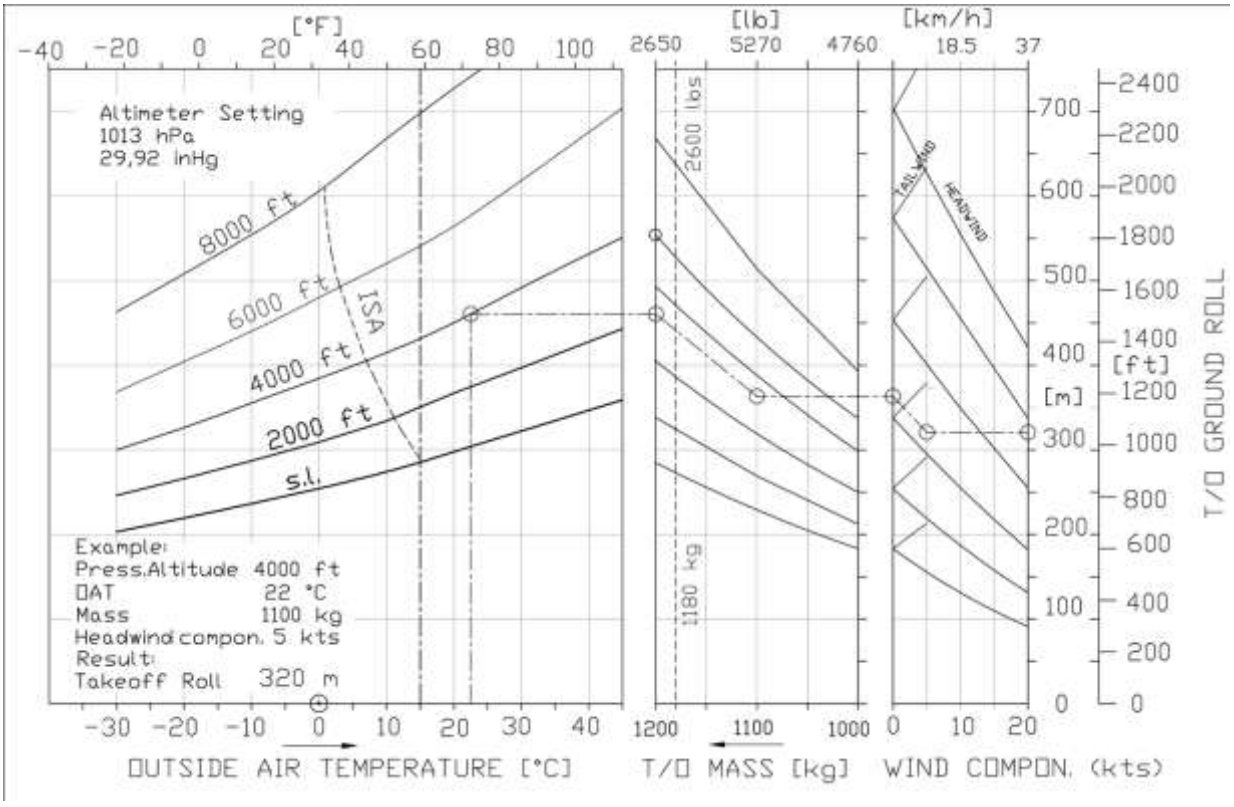

Figure 1 - Takeoff ground roll

NOTE

In case of headwind, the takeoff run decreases by 2.5m for each knot of wind (8 ft/kt).

In case of tailwind, the takeoff run increases by 10m for each knot of wind (33 ft/kt).

Measurement distances for short grass (less than 2 inches) must be increased of 10%
Measurement distances for high grass (more than 2 inches) must be increased of 15%

A rising runway with a gradient of 1% causes an acceleration decreasing of the same intensity and, consequently, the takeoff run increases by 5%.

Takeoff distance

CONDITIONS:

- Flaps: T/O
- Throttle levers: FULL FORWARD
- Runway: paved

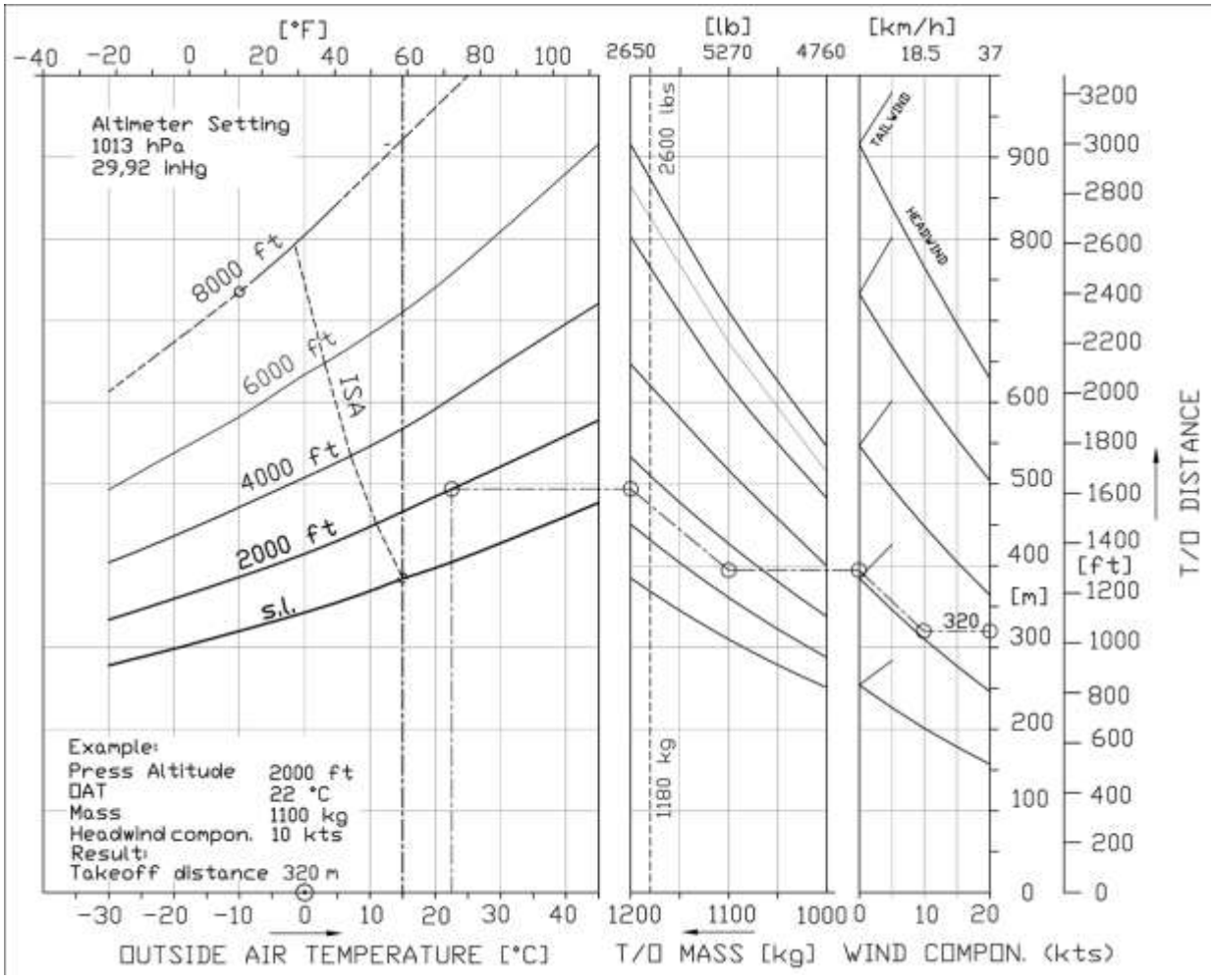

Figure 2 - Takeoff distance (50 ft. Obs)

NOTE

In case of headwind, the takeoff run decreases by 4m for each knot of wind (13 ft/kt).

In case of tailwind, the takeoff run increases by 14m for each knot of wind (40 ft/kt).

Take off roll measurement distances for short grass (less than 2 inches) must be increased of 10%
Take off roll measurement distances for high grass (more than 2 inches) must be increased of 15%

A rising runway with a gradient of 1% causes a takeoff run increasing by about 4%.

CLIMB PERFORMANCE (ONE ENGINE INOPERATIVE)

CONDITIONS:

- AC Clean configuration
- One engine inoperative
- Max Cont. Power – Airspeed:

Weight [kg]	V_{SSE} [KIAS]
1180	80
1080	78
980	75

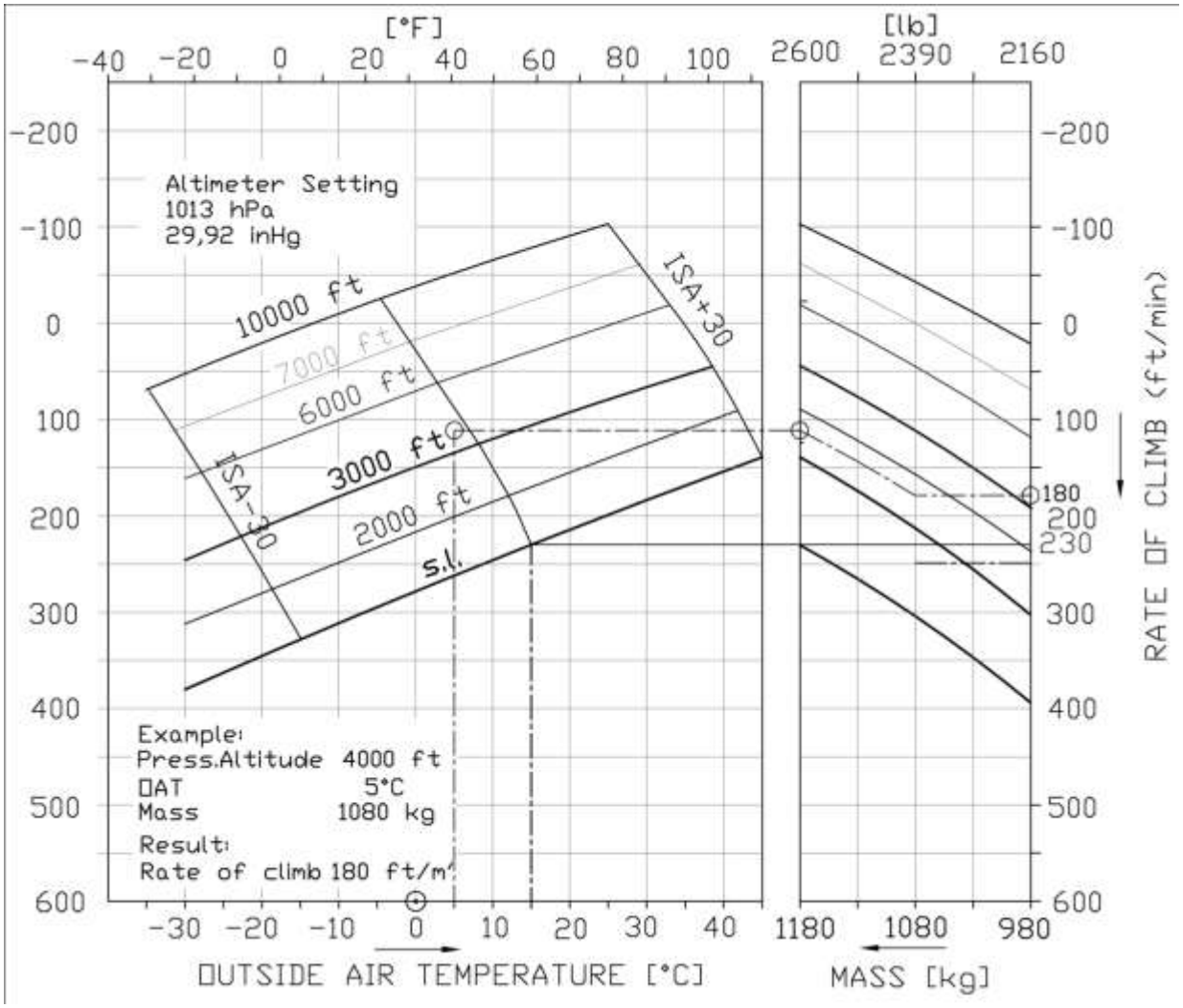

Figure 3 – Rate of Climb (one engine inoperative)

WEIGHT AND BALANCE

For weight and balance, make reference to Section 6 of this Manual.

SYSTEMS

INSTRUMENTS PANEL

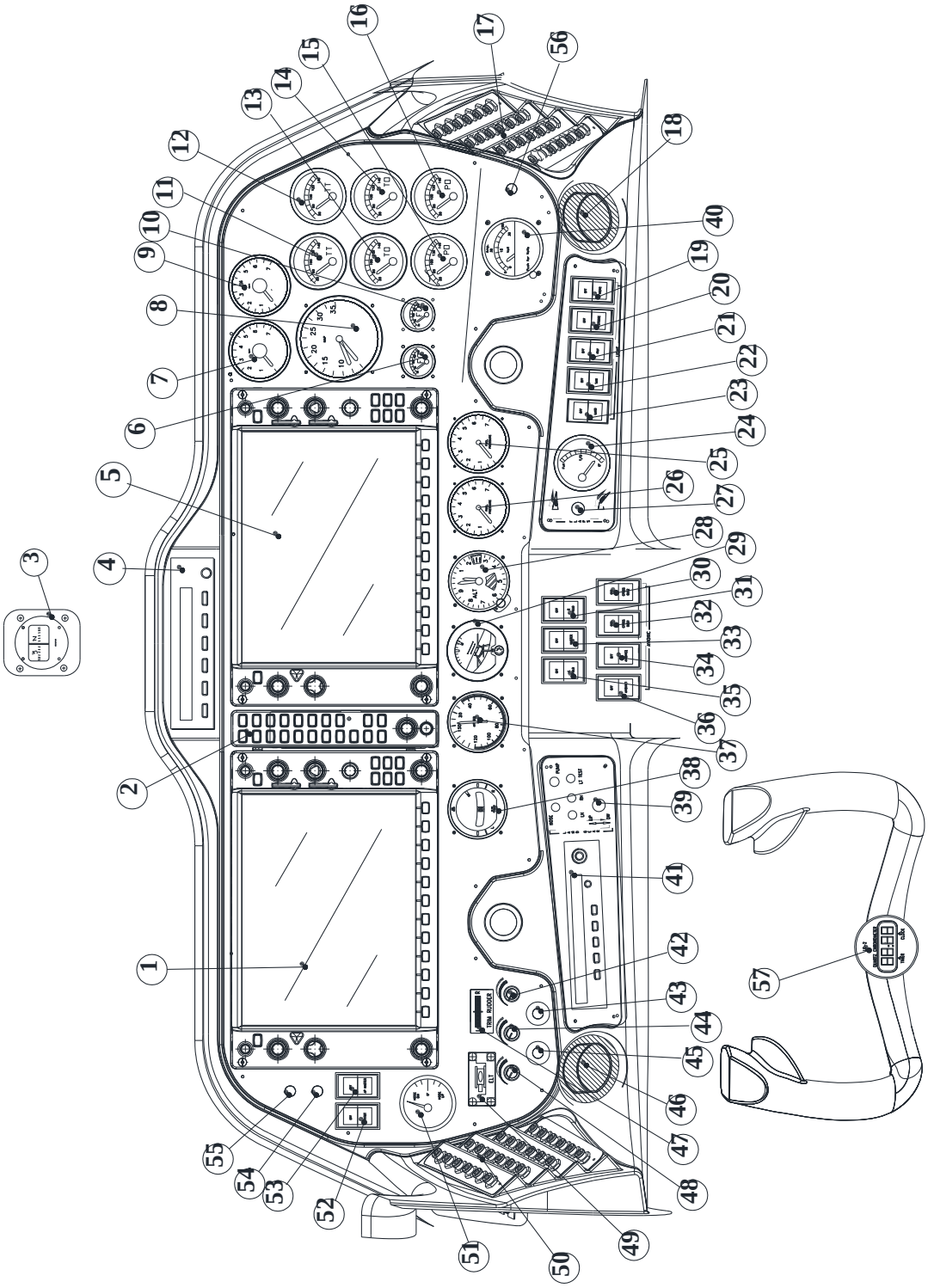

Instruments panel (typical layout)

Item	Description
1	GDU 1040 (PFD)
2	GMA 1347
3	Compass
4	A/P Programmer/Computer
5	GDU 1040 (MFD)
6	LH fuel quantity indicator
7	LH R.P.M.
8	Dual M.A.P. indicator
9	RH R.P.M.
10	RH fuel quantity indicator
11	LH CHT
12	RH CHT
13	LH Oil Temperature
14	RH Oil Temperature
15	LH oil pressure
16	RH oil pressure
17	RH breakers panel
18	RH ram air inlet
19	Instruments light switch
20	Strobe light switch
21	Navigation light switch
22	Taxi light switch
23	Landing light switch
24	Position flaps indicator
25	RH fuel pressure
26	LH fuel pressure
27	Flap switch
28	Standby Altimeter
29	Standby Attitude indicator

Item	Description
30	RH Cross bus switch
31	RH Field
32	LH Cross bus switch
33	Master switch
34	RH Avionic switch
35	LH Field
36	LH Avionic switch
37	Standby Airspeed indicator
38	Side slip indicator
39	LG control knob
40	Voltammeter Indicator
41	ADF control panel
42	Cockpit light dimmer
43	Cabin heat (warm air from RH engine)
44	Avionics lights dimmer
45	Cabin heat (warm air from LH engine)
46	LH ram air inlet
47	Trim rudder indicator
48	Switches built-in lights dimmer
49	ELT Indicator
50	RH breakers panel
51	Pitch trim indicator
52	Pitot heat switch
53	A/P Master switch
54	A/P trim master switch
55	Fire Detector push-to-test
56	LH/RH Ammeter selector switch
57	Chronometer

SUPPLEMENT NO. G8

BRAZILIAN AIRCRAFT FLIGHT MANUAL SUPPLEMENT

(EASA APPROVED)

Record of Revisions

Rev	Revised page	Description of Revision	Tecnam Approval			EASA Approval or Under DOA Privileges
			DO	OoA	HDO	
0	-	See Note (*)				

Note (*): this Supplement has been originally issued on 4 March 2011, after EASA Third Country Validation process completion.

List of Effective Pages

Page	Revision	Page	Revision
G8-1	Rev 0	**G8-6**	Rev 0
G8-2	Rev 0	**G8-7**	Rev 0
G8-3	Rev 0	**G8-8**	Rev 0
G8-4	Rev 0	**G8-9**	Rev 0
G8-5	Rev 0	**G8-10**	Rev 0

TABLE OF CONTENTS

INTRODUCTION 4

GENERAL 4

LIMITATIONS 5
Approved fuel 5
VHF/COMM system 5
GPS systems 6
GPS operation (for airplanes with autopilot installed) 6
GPS operation (for airplanes without autopilot installed) 7
WAAS and SBAS functionalities: 7
Placards in portuguese 8

INTRODUCTION

This supplement applies for Brazilian registered aircraft.

GENERAL

Information contained herein complements the basic information in the EASA Approved Aircraft Flight Manual when the aircraft is registered in Brazil.

For limitations, procedures, and performance information not contained in this Supplement, refer to the basic Aircraft Flight Manual.

LIMITATIONS

APPROVED FUEL

APPROVED FUEL: AVGAS 100 LL (ASTM D910)

CAUTION

Use of automotive gasoline (MOGAS) is not allowed for operation in Brazil.

CAUTION

Use of Aviation Fuel Avgas 100LL results in greater wear of valve seats and greater combustion deposits inside cylinders due to higher lead content. Make reference to Rotax Maintenance Manual who provides dedicated checks due to the prolonged use of Avgas.

VHF/COMM SYSTEM

When operating the VHF/COMM system in Brazilian air space, the selection of the channel spacing of 8.33 kHz can cause the loss of communication with the Air Traffic Control (ATC).

GPS SYSTEMS

GPS OPERATION (FOR AIRPLANES WITH AUTOPILOT INSTALLED)

- Use of GPS for precision approach navigation mode is not allowed.

- Use of GPS is prohibited as primary means for navigation. GPS is approved as supplemental means for navigation;

- Navigation using of the GPS system as the source of information is limited to IFR en route, terminal area and non-precision approach mode;

- During IFR in terminal area or non-precision approach using GPS, autopilot or flight director must be coupled to GPS.

- If RAIM function becomes unavailable in “en route” phase of flight, position must be verified every 15 minutes using other IFR approved navigation system;

- During IFR in terminal area or non-precision approach using GPS, in case RAIM function becomes unavailable, the GPS navigation must be discontinued;

- Before an IFR non-precision approach using GPS, the availability of the RAIM function must be checked to the time and place predicted (RAIM prediction). If predicted the unavailability of the RAIM function, navigation must be planned with others approved navigation systems;

- Before a non-precision approach using GPS, the database information must be compared with that in the approach chart, including transitions, position and altitude of waypoints;

- IFR non-precision approach using GPS must be based on the approved procedures of the equipment database. It cannot be done based on data manually included.

GPS OPERATION (FOR AIRPLANES WITHOUT AUTOPILOT INSTALLED)

- Use of GPS for precision approach navigation mode is not allowed.

- Use of GPS is prohibited as primary means for navigation. GPS is approved as supplemental means for navigation;

- Use of GPS is prohibited for IFR in terminal area or in non-precision approach operations;

- If RAIM function becomes unavailable in en route phase of flight, position must be verified every 15 minutes using other IFR approved navigation system.

WAAS AND SBAS FUNCTIONALITIES:

The WAAS and SBAS functionalities are not available in Brazil and these functions are not tested or approved in Brazilian air space.

PLACARDS IN PORTUGUESE

Description	Placard	Place
Smoking ban	NÃO FUME	Instruments panel, right side
Engine oil level and specifications		On the engine nacelle, in correspondence of the engine oil reservoir access door
Fuel type and quantity		In correspondence of each fuel tank filler cap.
Baggage compartment capacity		Baggage compartment (vertical panel)

Description	Placard	Place
Ditching emergency exit: opening instructions		Ditching emergency exit handle: external side
Ditching emergency exit: opening instructions		Ditching emergency exit handle: internal side
Door locking system: bypass instructions	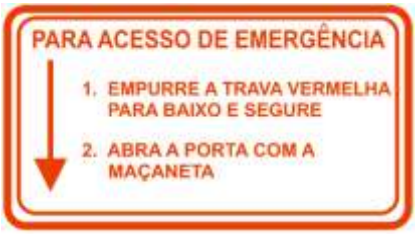	Main door and emergency exit: external side
Door locking system: bypass instructions		Main door and emergency exit: internal side

Description	Placard	Place
Main door: exit instructions	ADVERTÊNCIA VERIFIQUE SE AS HELICES ESTÃO PARADAS ANTES DE ABRIR A PORTA SAIDA EM DIREÇÃO À FRENTE DA AERONAVE	Main door, internal side
Emergency exit label	SAÍDA DE EMERGÊNCIA	Emergency exit: internal and external side
Towing maximum turning angle	CUIDADO Ângulo de giro máximo do reboque 20° do centro para cada lado	Nose landing gear front door

SUPPLEMENT NO. G9

CHINESE AIRCRAFT FLIGHT MANUAL SUPPLEMENT

(EASA APPROVED)

Record of Revisions

Rev	Revised page	Description of Revision	Tecnam Approval			EASA Approval or Under DOA Privileges
			DO	OoA	HDO	
0	-	First issue	P. Violetti	M. Oliva	L. Pascale	Third Country Validation

List of Effective Pages

Page	Revision	Page	Revision
G9-1	Rev 0	**G9-7**	Rev 0
G9-2	Rev 0	**G9-8**	Rev 0
G9-3	Rev 0	**G9-9**	Rev 0
G9-4	Rev 0	**G9-10**	Rev 0
G9-5	Rev 0	**G9-11**	Rev 0
G9-6	Rev 0	**G9-12**	Rev 0

TABLE OF CONTENTS

INTRODUCTION 4
GENERAL 4
LIMITATIONS 5
Approved fuel 5
Placards in Chinese 6
NORMAL OPERATIONS 10
Cold weather operations 10

INTRODUCTION

This supplement applies for Chinese registered aircraft.

GENERAL

Information contained herein complements the basic information in the EASA Approved Aircraft Flight Manual when the aircraft is registered in China.

For limitations, procedures, and performance information not contained in this Supplement, refer to the basic Aircraft Flight Manual.

LIMITATIONS

APPROVED FUEL

- MOGAS compliant with PRC National Standard GB17930-2006 - Octane Rating (RON) 97
- MOGAS ASTM D4814
- MOGAS EN 228 Super/Super plus (min. RON 95)
- AVGAS 100 LL (ASTM D910)

CAUTION

Prolonged use of Aviation Fuel Avgas 100LL results in greater wear of valve seats and greater combustion deposits inside cylinders due to higher lead content. It is therefore suggested to avoid using this type of fuel unless strictly necessary. Make reference to Rotax Maintenance Manual who provides dedicated checks due to the prolonged use of Avgas.

PLACARDS IN CHINESE

Description/Place	Placard	Chinese
Smoking ban. Instruments panel, right side	NO SMOKING	禁止吸烟
Engine oil level and specifications. On the engine nacelle, in correspondence of the engine oil reservoir access door	OIL TANK CHECK LEVEL OIL LEVEL MAX 3Lt OK MIN 2Lt DO NOT FLY WITH OIL LEVEL OUT OF LIMITS USE ONLY OIL WITH API CLASSIFICATION SG OR HIGHER	滑油箱 检查油位 滑油油位 最大 3Lt OK 最低 2Lt 滑油油位超出限制时，禁止飞行。 只允许使用API规定的或更高级别的滑油。
Fuel type and quantity. In correspondence of each fuel tank filler cap.	MOGAS GB17930 OCTANE RATING (RON)97 – MOGAS ASTM D4814 AVGAS 100LL (ASTM D910) 97 LITERS (25.6 U.S. GALS.) TOTAL USABLE CAPACITY	GB17930 97号车用汽油–ASTM D4814车用汽油 航空汽油 100LL（ASTM D910） 97升（25.6 U.S. 加仑） 合计可用容量
Baggage compartment capacity. Baggage compartment (vertical panel)	MAX BAGGAGE LOAD 80kg/176lb MAX. SPEC. PRESS. 0.9 kg/dm² - 19 lbs/sqft FASTEN THE BAGGAGES WITH CARGO NET BEFORE FLIGHT	最大行李载荷 80kg/176磅 最大规定压强 0.9 kg/dm2-19lbs/sqft 飞行前用行李网固定行李。

Description/Place	Placard	Chinese
Ditching emergency exit: opening instructions. Ditching emergency exit handle: internal side		水上迫降应急出口 1、旋转。 2、平稳向外推。
Ditching emergency exit: opening instructions. Ditching emergency exit handle: external side		水上迫降应急出口 1、旋转。 2、平稳向内拉。
Door locking system: by-pass instructions. Main door and emergency exit: external side		应急通道 1、按住红色扭。 2、用把手打开门。
Door locking system: by-pass instructions. Main door and emergency exit: internal side		应急出口 1、按住红色扭。 2、用把手打开门。

Description/Place	Placard	Chinese
Main door: exit instructions. Main door, internal side	WARNING VERIFY PROPELLER STOPPED BEFORE OPENING DOOR EXIT TOWARDS FRONT OF AIRCRAFT	警告 打开门，向飞机前方撤离前，确认螺旋桨已经停止转动。
Emergency exit label. Emergency exit: internal and external side	EMERGENCY EXIT	应急出口
Maximum steering angle. Front of the aircraft.	CAUTION TOWING MAXIMUM TURNING ANGLE: 20° EITHER SIDE OF CENTER	注意 牵引最大转弯角度：中立两侧20度。

INTENTIONALLY LEFT BLANK

NORMAL OPERATIONS

COLD WEATHER OPERATIONS

Engine cold weather operation

Refer to Rotax 912 Series Operators Manual, last issue, providing instructions for operating media (lubricant and coolant specifications) to be used in cold weather operation.

Parking

When the airplane is parked in cold weather conditions and it is expected to be soaked at temperatures below freezing, some precautions need to be taken.

Clear snow, slush, and ice in the parking area, or at least clear the area around the tires to prevent them from freezing to the ground. Apply plugs on Pitot and static ports.

The exposed airframe parts should be protected, especially the engines, the wheels, the blades and the gears against the snow or ice accumulation. Water and other freezable liquids should be removed from the airplane.

Standing water that could freeze should be removed from critical parts, as flaps and ailerons hinges, trim tabs hinges, drain points, LG doors, cabin doors etc.

With an ambient temperature of below -20°C, remove battery and store in a warm dry place; additionally in order to prevent a heavy discharge and to increase the battery life time, it is recommended to use an external power source for engine starting at temperatures lower than –15°C.

When wheel brakes come in contact with ice, slush, or snow with freezing conditions, the brake disk may freeze: park the aircraft with parking brake control knob in OFF position and ensure the aircraft is properly chocked and moored.
In any case, when the probability of ice, snow, or heavy frost is forecast, the use of a hangar is strongly recommended.

Preflight

WARNING

Flight in expected and/or known icing conditions is forbidden.

An external inspection of the aircraft is performed before each flight, as prescribed on Section 4. For cold weather operations, the crew must focus on the check of following parts of airplane (free of snow/ice/standing water).

- control surfaces
- fuselage
- wings
- vertical and horizontal stabilator
- stall warning switch
- engine inlets
- engines draining points
- propeller blades
- LG doors
- Pitot, and static ports
- fuel tank vents

Tires show low pressure in cold weather: the required adjustments to inflation pressure should be performed on tires cooled to ambient temperature.

If the crew detects ice, anti icing products are not allowed. To remove ice, tow the aircraft in the hangar and operate with a soft brush or a humid cloth.

WARNING

Removal of snow/ice accumulations is necessary prior to takeoff because they will seriously affect airplane performance. Aircraft with ice/snow accumulation are forbidden to flight.

If the aircraft must be operated in cold weather conditions within the range -25ºC to -5ºC**,** it is suggested to perform following procedure in order to speed up the engine warm-up:

- Tow the airplane in a warm hangar (at temperature more then -5ºC).
- Let airplane temperature stabilize.
- Heat the cabin at a suitable value for crew comfort: an electrical fan heater can be used inside the cabin.
- Tow airplane outside and perform engine starting.

INTENTIONALLY LEFT BLANK

SUPPLEMENT NO. G10 – INCREASED MTOW (1230 KG)

RECORD OF REVISIONS

Rev	Revised page	Description of Revision	Tecnam Approval			EASA Approval Or Under DOA Privileges
			DO	OoA	HDO	
0	--	New Edition	D. Ronca	C. Caruso	M. Oliva	-
1	SW5-16	Amend of Cruise performances table	D. Ronca	C. Caruso	M. Oliva	Approved under the authority of DOA, ref. EASA.21J.335 (MOD2006/290.170316)

LOEP

	Page	Revision
Cover pages	G10-1 thru 2	Rev 1
	G10-3 thru 12	Rev 0
Section 2	SW2- 5	Rev 0
	SW2-6	Rev 0
	SW2-7	Rev 0
	SW2-8	Rev 0
	SW2-15	Rev 0
	SW2-16	Rev 0
	SW2-21	Rev 0
	SW2-22	Rev 0
Section 5	SW5-1	Rev 0
	SW5-2 thru 4	Rev 0
	SW5-5	Rev 0
	SW5-6	Rev 0
	SW5-7 thru 9	Rev 0
	SW5-10 thru 15	Rev 0
	SW5-16	Rev 1
	SW5-17 thru 22	Rev 0

INTRODUCTION

This Supplement applies to aircraft equipped with Garmin G950 Integrated Flight Deck System (Design Change MOD 2006/002).

It contains supplemental information to perform Increased Maximum Takeoff Weight (1230 kg) operations when the Tecnam Service Bulletin SB 077-CS or Design Change MOD 2006/015 has been embodied on the airplane.

The information contained herein supplements or supersedes the basic Aircraft Flight Manual or the Supplement G1, as applicable: detailed instructions are provided to allow the owner for replacing the Basic AFM/Supplement G1 pages containing information amended as per the Increased MTOW Design Change in subject.

It is the owner's responsibility to replace the mentioned pages in accordance with the instructions herein addressed section by section.

IMPORTANT

The owner has to apply the instructions reported on Supplement G1, then those herein reported.

Supplement G10: pages replacement instructions

SECTION 1 - GENERAL

See Section 1 of the Basic Manual

Supplement G10: pages replacement instructions

SECTION 2 - LIMITATIONS

Make sure you first applied instructions reported on Supplement G1, Section 2 Limitations

Apply following pages replacement procedure:

Supplement G10 – LIMITATIONS page		Supplement G1 Section 2 page
SW2-5	**REPLACES**	Page 2-5 of Basic AFM, Section 2
SW2-6	**REPLACES**	Page 2-6 of Basic AFM, Section 2
SW2-7	**REPLACES**	Page S2-7 of Supplement G1, Section 2
SW2-8	**REPLACES**	Page S2-8 of Supplement G1, Section 2
SW2-15	**REPLACES**	Page 2-15 of Basic AFM, Section 2
SW2-16	**REPLACES**	Page 2-16 of Basic AFM, Section 2
SW2-21	**REPLACES**	Page S2-21 of Supplement G1, Section 2
SW2-22	**REPLACES**	Page S2-22 of Supplement G1, Section 2

INTENTIONALLY LEFT BLANK

2 SPEED LIMITATIONS

The following table addresses the airspeed limitations and their operational significance:

SPEED			KIAS	KCAS	REMARKS
V_{NE}	Never exceed speed		171	172	Do not exceed this speed in any operation.
V_{NO}	Maximum Structural Cruising Speed		138	136	Do not exceed this speed except in smooth air, and only with caution.
V_A	Design Manoeuvring speed		122	119	Do not make full or abrupt control movement above this speed, because under certain conditions the aircraft may be overstressed by full control movement.
V_O	Operating Manoeuvring speed				
V_{LE}	Maximum Landing Gear extended speed		93	93	Do not exceed this speed with the landing gear extended.
V_{LO}	Maximum Landing Gear operating speed		93	93	Do not exceed this speed when operating the landing gear.
V_{FE}	Maximum flaps extended speed	***FULL***	93	93	Do not exceed this speed for indicated flaps setting.
		T.O.	122	119	
V_{MC}	Aircraft minimum control speed with one engine inoperative		62	62	Do not reduce speed below this value in event of one engine inoperative condition.

INTENTIONALLY LEFT BLANK

3 AIRSPEED INDICATOR MARKINGS

Airspeed indicator markings and their colour code are explained in the following table.

MARKING	KIAS	EXPLANATION
White band	**54-93**	Lower limit is V_{SO}, upper limit is the maximum allowable speed with flaps extended in *FULL* position.
Red line	**62**	Minimum aircraft control speed with one engine inoperative and flaps set to T.O.
Green band	**66-138**	Normal aircraft operating range (lower limit is V_{S1}, stall speed in "clean" configuration, and upper limit is the maximum structural cruise speed V_{NO}).
Blue line	**84**	Best rate-of-climb speed with one engine inoperative at sea level.
Yellow band	**138-171**	Speed range where manoeuvres must be conducted with caution and only in smooth air.
Red line	**171**	Maximum speed for all operations.

INTENTIONALLY LEFT BLANK

14 WEIGHTS

Condition	Weight	
Maximum takeoff weight	1230 kg	2712 lb
Maximum landing weight	1230 kg	2712 lb
Maximum zero wing fuel weight	1195 kg	2635 lb

NOTE *Refer to Para. 21.4 of this AFM Section for baggage loading limitations.*

INTENTIONALLY LEFT BLANK

21. LIMITATIONS PLACARDS

Hereinafter the placards, related to the operating limitations and installed on ***P2006T***, are reported.

21.1. SPEED LIMITATIONS

On the left side instrument panel, the following placards reporting the speed limitations are placed:

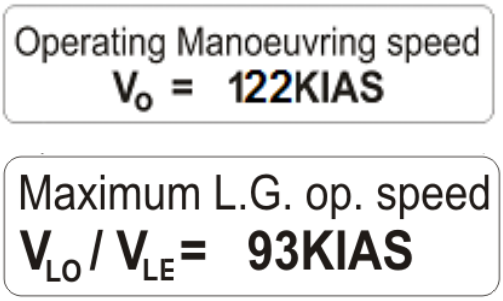

Speed limitations placard for MTOW @1230 kg (2712 lb)

21.2. OPERATING LIMITATIONS

On the instrument panel, it is placed the following placard reminding the observance of aircraft operating limitations; make reference to Para. 22 for the list of equipment required on board to allow flight operations in VFR Day, VFR Night, IFR Day and IFR Night conditions.

This A/C can be operated only in normal category DAY-NIGHT-VFR-IFR (with required equipment) in non-icing conditions. All aerobatics manoeuvres including spinning are prohibited. For operational limitations refer to FLIGHT MANUAL

Supplement G10: pages replacement instructions

EMERGENCY PROCEDURES

Apply following instruction:

Section 3 - EMERGENCY PROCEDURES pages as per Supplement G1 Instructions are still valid

NOTE

Because of MTOW increase, the best rate-of-climb speed with one engine inoperative (V_{YSE}) is 84 KIAS. Refer to "Characteristic airspeeds with one engine inoperative" table reported on basic AFM Section 3.

Supplement G10: pages replacement instructions

NORMAL PROCEDURES

Apply following instruction:

Section 4 - NORMAL PROCEDURES pages as per Supplement G1 instructions are still valid

Supplement G10: pages replacement instructions

PERFORMANCES

Apply following instruction:

Supplement G10 – PERFORMANCES pages replace basic AFM Section 5 as a whole.

INTENTIONALLY LEFT BLANK

SECTION 5 - PERFORMANCES

INDEX

1. Introduction 2
2. Use of performances charts 2
3. Airspeed indicator system calibration 3
4. ICAO Standard Atmosphere 4
5. Stall speed 5
6. Crosswind 6
7. Takeoff performances 7
8. Take-off Rate of Climb at V_y 10
9. Take-off Rate of Climb at V_x 11
10. Enroute Rate of Climb at V_y 12
11. Enroute Rate of Climb at V_x 13
12. One-Engine Rate of Climb at V_{ySE} 14
13. One-Engine Rate of Climb at V_{xSE} 15
14. Cruise performances 16
15. Landing performances 19
16. Balked landing climb gradient 22
17. Noise data 22

1. INTRODUCTION

This section provides all necessary data for an accurate and comprehensive planning of flight activity from takeoff to landing.

Data reported in graphs and/or in tables were determined using:

- "Flight Test Data" under conditions prescribed by EASA CS-23 regulation
- aircraft and engine in good condition
- average piloting techniques

Each graph or table was determined according to ICAO Standard Atmosphere (ISA - s.l.); evaluations of the impact on performances were carried out by theoretical means for:

*airspeed
*external temperature
*altitude
*weight
*runway type and condition

2. USE OF PERFORMANCES CHARTS

Performances data are presented in tabular or graphical form to illustrate the effect of different variables such as altitude, temperature and weight. Given information is sufficient to plan the mission with required precision and safety.

Additional information is provided for each table or graph.

3. AIRSPEED INDICATOR SYSTEM CALIBRATION

Graph shows calibrated airspeed V_{CAS} as a function of indicated airspeed V_{IAS}.

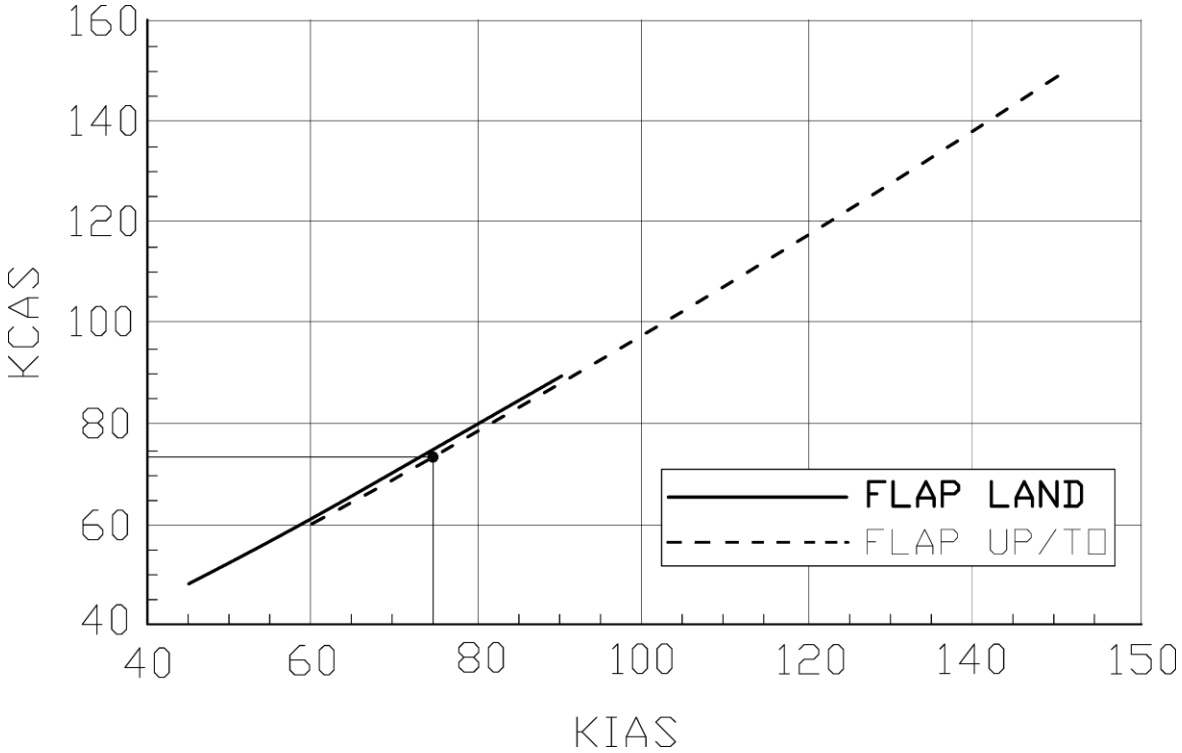

Figure 1 - IAS/CAS chart

Example:

Given	***Find***
KIAS *75*	KCAS *74*

4. ICAO STANDARD ATMOSPHERE

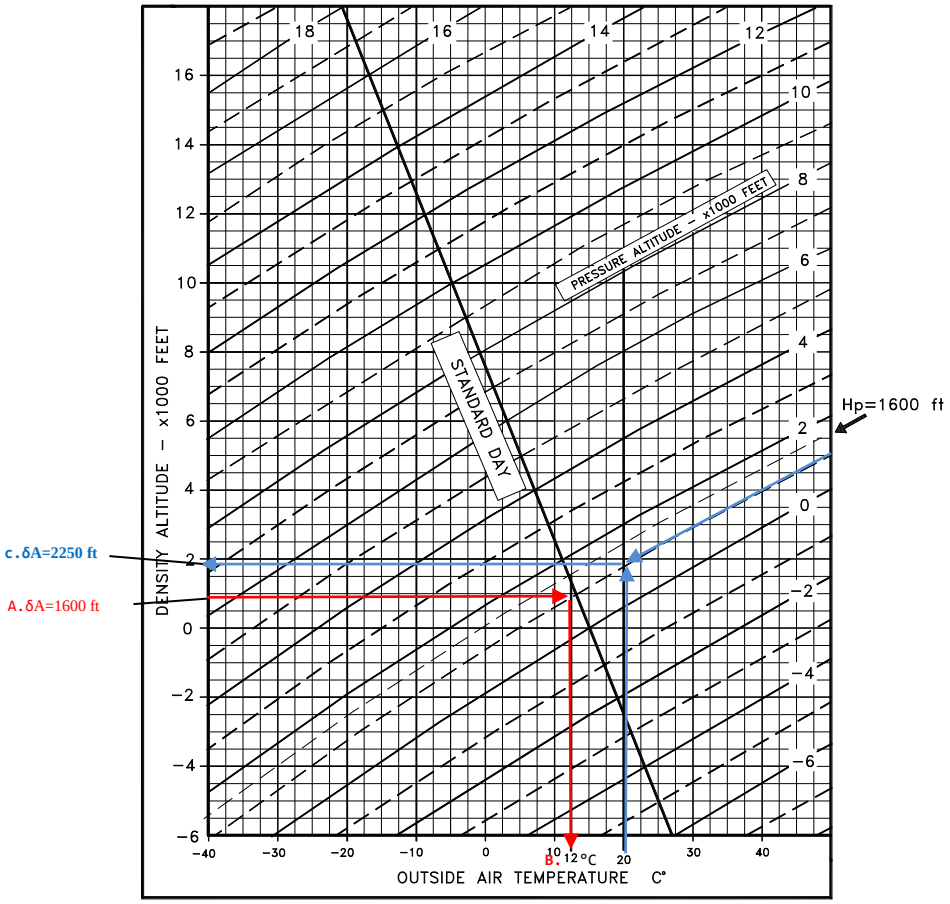

Figure 2 – ICAO chart

Examples:

Given

a. Temperature = 20°C

b. Pressure altitude = 1600'

Find

c. Corresponding Density Altitude = 2250'

Given

A. Pressure altitude = 1600'

ISA condition

Find

B. ISA Air Temperature = 12°C

5. STALL SPEED

Weight: *1230 kg (2712 lb)*
Throttle Levers: *IDLE*
Landing Gear: *Down*
CG: *Most Forward (16.5%)*
No ground effect

WEIGHT	BANK ANGLE	STALL SPEED					
		FLAPS 0°		FLAPS T/O		FLAPS FULL	
[kg]	*[deg]*	KIAS	KCAS	KIAS	KCAS	KIAS	KCAS
1230 *(FWD C.G.)*	0	66	65	59	57	54	55
	15	67	66	58	58	55	56
	30	71	70	61	61	59	59
	45	79	78	68	68	65	65
	60	95	93	83	81	79	78

NOTE

Altitude loss during conventional stall recovery, as demonstrated during flight tests is approximately 250 ft with banking below 30°.

6. CROSSWIND

Maximum demonstrated crosswind is 17 Kts

⇒ *Example:*

Given	***Find***
Wind direction (*with respect to aircraft longitudinal axis*) = 30°	Headwind = 17.5 Kts
Wind speed = 20 Kts	Crosswind = 10 Kts

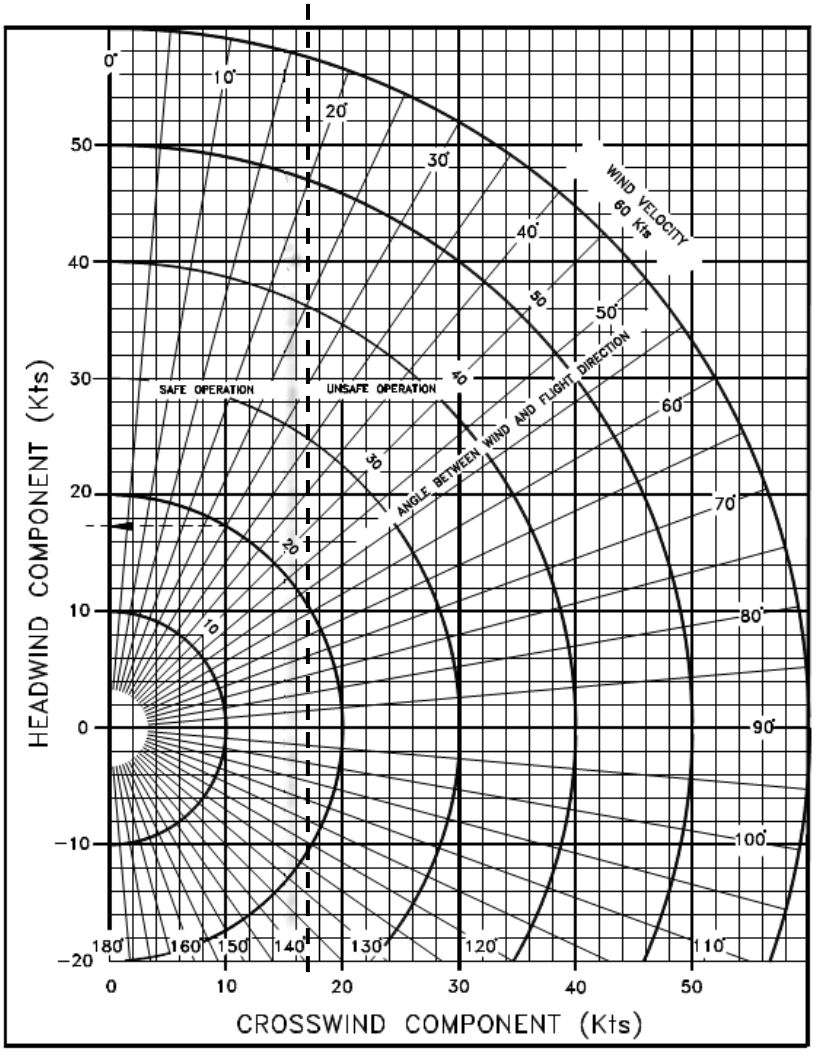

Figure 3 – Crosswind diagram

7. TAKEOFF PERFORMANCES

Weight = *1230 kg (2712 lb)*

Flaps: *T/O*
Speed at Lift-Off = *65 KIAS*
Speed Over *50ft* Obstacle = *70 KIAS*
Throttle Levers: *Full Forward*
Runway: *Grass*

Corrections

Headwind: - 2.5m for each kt (*8 ft/kt*)
Tailwind: + 10m for each kt (*33ft/kt*)
Paved Runway: - *6%* to Ground Roll
Runway slope: + 5% to Ground Roll for each +1%

Pressure Altitude [ft]		Distance [m]				
		Temperature [°C]				ISA
		-25	0	25	50	
S.L.	Ground Roll	207	263	328	401	**301**
	At 50 ft AGL	271	345	429	525	**394**
1000	Ground Roll	231	294	366	447	**330**
	At 50 ft AGL	303	385	479	586	**432**
2000	Ground Roll	258	328	409	500	**362**
	At 50 ft AGL	338	430	535	654	**474**
3000	Ground Roll	289	367	457	559	**398**
	At 50 ft AGL	378	480	598	731	**521**
4000	Ground Roll	323	411	511	625	**438**
	At 50 ft AGL	423	537	669	818	**573**
5000	Ground Roll	362	460	572	700	**481**
	At 50 ft AGL	473	602	749	916	**630**
6000	Ground Roll	405	515	642	785	**530**
	At 50 ft AGL	531	675	840	1027	**694**
7000	Ground Roll	455	578	720	880	**584**
	At 50 ft AGL	595	757	942	1152	**765**
8000	Ground Roll	511	650	809	989	**645**
	At 50 ft AGL	669	850	1059	1295	**844**
9000	Ground Roll	575	730	909	1112	**712**
	At 50 ft AGL	752	956	1190	1456	**932**
10000	Ground Roll	647	822	1023	1252	**786**
	At 50 ft AGL	847	1076	1340	1638	**1029**

Weight = *1080 kg (2381 lb)*

Flaps: *T/O*
Speed at Lift-Off = *65 KIAS*
Speed Over *50ft* Obstacle = *70 KIAS*
Throttle Levers: *Full Forward*
Runway: *Grass*

Corrections

Headwind: - 2.5m for each kt (*8 ft/kt*)
Tailwind: + 10m for each kt (*33ft/kt*)
Paved Runway: - *6%* to Ground Roll
Runway slope: + 5% to Ground Roll for each +1%

Pressure Altitude [ft]		Distance [m]				
		Temperature [°C]				ISA
		-25	0	25	50	
S.L.	Ground Roll	148	188	234	286	**215**
	At 50 ft AGL	193	246	306	374	**281**
1000	Ground Roll	165	210	261	319	**235**
	At 50 ft AGL	216	274	341	418	**308**
2000	Ground Roll	184	234	291	356	**258**
	At 50 ft AGL	241	306	381	466	**338**
3000	Ground Roll	206	262	326	398	**284**
	At 50 ft AGL	269	342	426	521	**372**
4000	Ground Roll	230	293	364	446	**312**
	At 50 ft AGL	301	383	477	583	**409**
5000	Ground Roll	258	328	408	499	**343**
	At 50 ft AGL	338	429	534	653	**449**
6000	Ground Roll	289	368	457	559	**378**
	At 50 ft AGL	378	481	599	732	**495**
7000	Ground Roll	324	412	513	628	**417**
	At 50 ft AGL	425	540	672	822	**545**
8000	Ground Roll	364	463	577	705	**460**
	At 50 ft AGL	477	606	755	923	**602**
9000	Ground Roll	410	521	648	793	**508**
	At 50 ft AGL	536	682	849	1038	**664**
10000	Ground Roll	461	586	730	893	**561**
	At 50 ft AGL	604	767	955	1168	**734**

Weight = *930 kg (2051 lb)*

Flaps: *T/O*
Speed at Lift-Off = *65 KIAS*
Speed Over *50ft* Obstacle = *70 KIAS*
Throttle Levers: *Full Forward*
Runway: *Grass*

Corrections

Headwind: - 2.5m for each kt (*8 ft/kt*)
Tailwind: + 10m for each kt (*33ft/kt*)
Paved Runway: - *6%* to Ground Roll
Runway slope: + 5% to Ground Roll for each +1%

Pressure Altitude [ft]		Distance [m]				
		Temperature [°C]				ISA
		-25	0	25	50	
S.L.	Ground Roll	100	127	158	194	**146**
	At 50 ft AGL	131	167	207	254	**190**
1000	Ground Roll	112	142	177	216	**160**
	At 50 ft AGL	146	186	231	283	**209**
2000	Ground Roll	125	159	197	242	**175**
	At 50 ft AGL	163	208	258	316	**229**
3000	Ground Roll	140	177	221	270	**192**
	At 50 ft AGL	183	232	289	353	**252**
4000	Ground Roll	156	198	247	302	**212**
	At 50 ft AGL	204	260	323	395	**277**
5000	Ground Roll	175	222	277	338	**233**
	At 50 ft AGL	229	291	362	443	**305**
6000	Ground Roll	196	249	310	379	**256**
	At 50 ft AGL	257	326	406	496	**335**
7000	Ground Roll	220	280	348	426	**282**
	At 50 ft AGL	288	366	455	557	**370**
8000	Ground Roll	247	314	391	478	**312**
	At 50 ft AGL	323	411	512	626	**408**
9000	Ground Roll	278	353	440	538	**344**
	At 50 ft AGL	364	462	575	704	**450**
10000	Ground Roll	313	397	495	605	**380**
	At 50 ft AGL	409	520	648	792	**498**

8. TAKE-OFF RATE OF CLIMB AT V_Y

Power Setting: Maximum Continuous Power
Flaps: Take-Off
Landing Gear: Up

Weight [kg]	Pressure Altitude [ft]	Climb Speed V_Y [KIAS]	Rate of Climb [ft/min] Temperature [°C] -25	0	25	50	ISA
1230	**S.L.**	**86**	1276	1088	920	768	**985**
	2000	**83**	1133	948	783	634	**873**
	4000	**79**	990	809	646	500	**761**
	6000	**76**	848	670	510	366	**649**
	8000	**73**	707	531	374	233	**537**
	10000	**70**	565	393	239	100	**425**
	12000	**67**	425	256	104	-32	**313**
	14000	**64**	285	118	-30	-164	**201**
1080	**S.L.**	**85**	1507	1302	1119	954	**1190**
	2000	**82**	1351	1150	970	808	**1068**
	4000	**79**	1196	998	822	662	**946**
	6000	**76**	1041	847	674	517	**825**
	8000	**73**	887	696	526	372	**703**
	10000	**69**	734	546	379	228	**581**
	12000	**66**	581	397	232	84	**459**
	14000	**63**	428	248	86	-59	**338**
930	**S.L.**	**85**	1803	1575	1372	1189	**1451**
	2000	**82**	1630	1406	1206	1026	**1315**
	4000	**79**	1457	1238	1041	864	**1180**
	6000	**75**	1286	1070	877	703	**1045**
	8000	**72**	1114	902	713	542	**909**
	10000	**69**	944	735	549	382	**774**
	12000	**65**	774	569	387	222	**639**
	14000	**62**	604	404	224	63	**503**

9. TAKE-OFF RATE OF CLIMB AT V_x

Power Setting: Maximum Continuous Power
Flaps: Take-Off
Landing Gear: Up

Weight [kg]	Pressure Altitude [ft]	Climb Speed V_x [KIAS]	Rate of Climb at V_x [ft/min] Temperature [°C] -25	0	25	50	ISA
1230	**S.L.**	**78**	1214	1037	880	738	**941**
	1000	**76**	1147	972	816	675	**888**
	2000	**75**	1080	906	751	612	**836**
	3000	**74**	1013	841	687	549	**783**
	4000	**73**	946	776	623	486	**731**
	5000	**72**	879	710	560	424	**678**
	6000	**71**	813	645	496	361	**626**
	7000	**70**	746	580	432	299	**574**
1080	**S.L.**	**78**	1283	1102	940	794	**1002**
	1000	**76**	1214	1034	874	729	**949**
	2000	**75**	1145	967	808	664	**895**
	3000	**74**	1076	900	742	600	**841**
	4000	**73**	1008	833	676	535	**787**
	5000	**72**	939	766	611	471	**733**
	6000	**71**	871	699	545	407	**679**
	7000	**70**	803	632	480	342	**625**
930	**S.L.**	**78**	1435	1243	1072	918	**1138**
	1000	**76**	1362	1172	1002	849	**1081**
	2000	**75**	1289	1101	932	780	**1024**
	3000	**74**	1216	1030	863	712	**967**
	4000	**73**	1144	958	793	644	**910**
	5000	**72**	1071	888	724	576	**853**
	6000	**71**	999	817	654	508	**796**
	7000	**69**	927	746	585	440	**739**

10. ENROUTE RATE OF CLIMB AT V_Y

Power Setting: Maximum Continuous Power
Flaps: Up
Landing Gear: Up

Weight [kg]	Pressure Altitude [ft]	Climb Speed V_Y [KIAS]	Rate of Climb [ft/min] Temperature [°C] -25	0	25	50	ISA
1230	**S.L.**	**84**	1317	1135	973	827	**1036**
	2000	**83**	1179	1000	841	697	**928**
	4000	**81**	1041	865	709	568	**819**
	6000	**80**	904	731	577	439	**711**
	8000	**78**	767	598	446	310	**603**
	10000	**77**	631	464	316	182	**495**
	12000	**75**	495	332	186	54	**387**
	14000	**73**	360	199	56	-73	**279**
1080	**S.L.**	**83**	1560	1360	1182	1022	**1251**
	2000	**82**	1408	1212	1037	879	**1132**
	4000	**80**	1257	1064	892	737	**1014**
	6000	**78**	1106	917	748	595	**895**
	8000	**76**	956	770	604	454	**776**
	10000	**74**	807	624	461	314	**658**
	12000	**72**	657	478	318	173	**539**
	14000	**70**	509	333	175	34	**420**
930	**S.L.**	**82**	1873	1649	1449	1269	**1527**
	2000	**81**	1703	1483	1286	1109	**1393**
	4000	**79**	1533	1317	1124	950	**1260**
	6000	**77**	1364	1151	962	791	**1127**
	8000	**75**	1196	987	800	632	**994**
	10000	**73**	1028	823	639	474	**861**
	12000	**71**	860	659	479	317	**727**
	14000	**69**	693	496	319	160	**594**

11. ENROUTE RATE OF CLIMB AT V_x

Power Setting: Maximum Continuous Power
Flaps: Up
Landing Gear: Up

Weight [kg]	Pressure Altitude [ft]	Climb Speed V_x [KIAS]	Rate of Climb at V_x [ft/min] Temperature [°C] -25	0	25	50	ISA
1230	**S.L.**	**72**	1241	1073	924	789	**982**
	1000	**72**	1177	1011	863	729	**932**
	2000	**72**	1114	949	802	669	**882**
	3000	**72**	1050	887	741	609	**832**
	4000	**72**	986	825	680	550	**782**
	5000	**72**	923	763	619	490	**732**
	6000	**71**	860	701	559	431	**682**
	7000	**71**	797	639	498	371	**632**
1080	**S.L.**	**72**	1480	1295	1130	981	**1194**
	1000	**72**	1410	1226	1062	915	**1139**
	2000	**72**	1340	1158	995	848	**1084**
	3000	**72**	1269	1089	928	782	**1029**
	4000	**71**	1199	1020	861	717	**973**
	5000	**71**	1129	952	794	651	**918**
	6000	**71**	1059	884	727	585	**863**
	7000	**71**	990	815	660	520	**808**
930	**S.L.**	**72**	1787	1578	1391	1223	**1463**
	1000	**72**	1707	1500	1315	1148	**1401**
	2000	**71**	1628	1422	1239	1074	**1339**
	3000	**71**	1549	1345	1163	999	**1277**
	4000	**71**	1470	1268	1087	925	**1215**
	5000	**71**	1391	1190	1012	851	**1153**
	6000	**71**	1312	1113	936	777	**1090**
	7000	**70**	1233	1036	861	703	**1028**

12. ONE-ENGINE RATE OF CLIMB AT V_{YSE}

Power Setting: Maximum Continuous Power (operative engine)
propeller feathered (inoperative engine)
Flaps: Up
Landing Gear: Up

Weight [kg]	Pressure Altitude [ft]	Climb Speed V_{YSE} [KIAS]	Rate of Climb [ft/min] Temperature [°C] -25	0	25	50	ISA
1230	S.L.	84	330	230	142	62	176
	1000	83	292	193	106	26	147
	2000	82	254	157	69	-9	117
	3000	81	216	120	33	-44	87
	4000	80	179	83	-3	-80	58
	5000	79	141	46	-38	-115	28
	6000	79	104	10	-74	-150	-1
	7000	78	67	-27	-110	-185	-31
1080	S.L.	80	436	330	235	149	271
	1000	80	396	290	196	111	240
	2000	79	355	251	157	73	208
	3000	79	315	211	118	35	176
	4000	79	275	172	80	-3	145
	5000	79	234	132	41	-41	113
	6000	78	194	93	3	-78	81
	7000	78	154	54	-35	-116	50
930	S.L.	79	574	455	349	253	390
	1000	79	529	411	305	211	355
	2000	79	483	367	262	168	319
	3000	78	438	322	219	126	284
	4000	78	393	278	176	83	248
	5000	78	348	235	133	41	213
	6000	78	304	191	90	-1	178
	7000	77	259	147	47	-43	142

13. ONE-ENGINE RATE OF CLIMB AT V_{xSE}

Power Setting: Maximum Continuous Power (operative engine)
propeller feathered (inoperative engine)
Flaps: Up
Landing Gear: Up

Weight [kg]	Pressure Altitude [ft]	Climb Speed V_{xSE} [KIAS]	Rate of Climb at V_{xSE} [ft/min] Temperature [°C] -25	0	25	50	ISA
1230	S.L.	83	325	227	140	61	174
	1000	82	288	191	104	26	145
	2000	81	251	155	69	-9	116
	3000	81	214	118	33	-44	86
	4000	80	177	82	-2	-78	57
	5000	79	140	46	-38	-113	28
	6000	78	103	10	-73	-148	-1
	7000	77	66	-26	-108	-183	-30
1080	S.L.	79	424	321	229	147	265
	1000	79	385	283	192	110	234
	2000	79	346	245	155	73	204
	3000	79	307	207	117	37	173
	4000	79	268	169	80	0	143
	5000	78	229	131	43	-36	112
	6000	78	190	93	6	-73	81
	7000	78	152	55	-31	-109	51
930	S.L.	78	556	442	341	249	380
	1000	78	513	400	299	209	346
	2000	78	469	358	258	168	312
	3000	78	426	316	217	128	279
	4000	78	383	274	176	87	245
	5000	78	340	232	134	47	211
	6000	77	298	190	93	7	177
	7000	77	255	148	52	-34	143

14. CRUISE PERFORMANCES

Weight: *1150 kg (2535 lb)*
Pressure Altitude: *0 ft*

RPM*	MAP [inHg]	ISA – 30°C (-15°C)			ISA (15°C)			ISA + 30°C (45°C)		
		PWR	KTAS	F.C.** [lt/hr]	PWR	KTAS	F.C.** [lt/hr]	PWR	KTAS	F.C.** [lt/hr]
2250	**29.5**	103%	143	28.6	97%	145	27.1	92%	146	25.8
2250	**28**	88%	134	24.5	83%	136	23.2	79%	138	22
2250	**26**	69%	122	19.2	65%	124	18.2	62%	125	17.3
2250	**24**	59%	115	16.6	56%	116	15.7	53%	117	14.9
2250	**22**	46%	103	12.8	43%	103	12.1	41%	103	11.5
2250	**20**	39%	96	11	37%	95	10.4	35%	94	9.9
2100	**28**	84%	132	23.5	80%	134	22.2	76%	135	21.1
2100	**26**	66%	121	18.5	63%	122	17.5	60%	123	16.7
2100	**24**	57%	114	16	54%	114	15.1	52%	115	14.4
2100	**22**	43%	100	12.1	41%	100	11.5	39%	100	10.9
2100	**20**	37%	92	10.2	35%	91	9.7	33%	89	9.2
1900	**26**	61%	117	17.1	58%	118	16.2	55%	119	15.4
1900	**24**	53%	110	14.9	50%	111	14.1	48%	111	13.4
1900	**22**	41%	97	11.4	39%	97	10.8	37%	96	10.2
1900	**20**	35%	89	9.6	33%	88	9.1	31%	85	8.7

* *Propeller RPM*
** *Fuel Consumption for each Engine*

Weight: *1150 kg (2535 lb)*
Pressure Altitude: *3000 ft*

RPM*	MAP [inHg]	ISA – 30°C (-21°C) PWR	KTAS	F.C.** [lt/hr]	ISA (9°C) PWR	TCAS	F.C.** [lt/hr]	ISA + 30°C (39°C) PWR	KTAS	F.C.** [lt/hr]
2388	**26.4**	92%	141	25.7	87%	143	24.3	83%	144	23.1
2250	**26.4**	89%	139	25	85%	141	23.6	80%	143	22.4
2250	**26**	85%	137	23.9	81%	138	22.6	77%	140	21.5
2250	**24**	72%	128	20	68%	129	18.9	64%	130	18
2250	**22**	57%	116	16	54%	117	15.1	51%	118	14.3
2250	**20**	48%	108	13.4	45%	108	12.7	43%	108	12.1
2100	**26.4**	85%	137	23.9	81%	138	22.6	77%	140	21.4
2100	**26**	82%	134	22.8	77%	136	21.6	73%	137	20.5
2100	**24**	69%	125	19.2	65%	127	18.1	62%	128	17.2
2100	**22**	54%	114	15.2	51%	114	14.3	49%	115	13.6
2100	**20**	45%	104	12.6	43%	104	11.9	41%	104	11.3
1900	**26.4**	78%	132	21.9	74%	134	20.7	70%	135	19.6
1900	**26**	75%	130	20.9	71%	131	19.8	67%	132	18.8
1900	**24**	63%	121	17.7	60%	122	16.7	57%	123	15.9
1900	**22**	50%	110	14.1	48%	110	13.3	45%	110	12.6
1900	**20**	42%	101	11.7	40%	101	11.1	38%	100	10.6

* *Propeller RPM*
** *Fuel Consumption for each Engine*

Weight: *1150 kg (2535 lb)*
Pressure Altitude: *6000 ft*

RPM*	MAP [inHg]	ISA – 30°C (-27°C) PWR	KTAS	F.C.** [lt/hr]	ISA (3°C) PWR	KTAS	F.C.** [lt/hr]	ISA + 30°C (33°C) PWR	KTAS	F.C.** [lt/hr]
2388	**23.6**	83%	139	23.3	79%	141	22	75%	142	20.9
2250	**23.6**	81%	138	22.6	76%	139	21.4	73%	141	20.3
2250	**22**	68%	129	19.1	65%	130	18.1	61%	131	17.2
2250	**20**	57%	119	15.8	54%	120	14.9	51%	120	14.2
2250	**18**	46%	108	12.9	44%	108	12.2	41%	107	11.6
2100	**23.6**	77%	135	21.6	73%	137	20.4	69%	138	19.4
2100	**22**	65%	126	18.2	62%	127	17.2	59%	128	16.4
2100	**20**	54%	116	15	51%	116	14.1	48%	117	13.4
2100	**18**	44%	106	12.4	42%	106	11.7	40%	105	11.1
1900	**23.6**	71%	130	19.8	67%	132	18.7	64%	133	17.8
1900	**22**	60%	122	16.8	57%	123	15.8	54%	123	15
1900	**20**	50%	112	13.9	47%	112	13.1	44%	112	12.4
1900	**18**	41%	102	11.6	39%	102	10.9	37%	100	10.4

* *Propeller RPM*
** *Fuel Consumption for each Engine*

Weight: *1150 kg (2535 lb)*
Pressure Altitude: *9000 ft*

RPM*	MAP [inHg]	ISA – 30°C (-33°C)			ISA (-3°C)			ISA + 30°C (27°C)		
		PWR	KTAS	F.C.** [lt/hr]	PWR	KTAS	F.C.** [lt/hr]	PWR	KTAS	F.C.** [lt/hr]
2388	**21.1**	75%	137	20.9	71%	139	19.7	67%	140	18.7
2250	**21.1**	73%	136	20.3	69%	137	19.2	65%	138	18.2
2250	**20**	65%	130	18.3	62%	131	17.2	58%	131	16.3
2250	**18**	53%	118	14.9	50%	119	14	48%	118	13.3
2100	**21.1**	69%	133	19.4	65%	134	18.3	62%	135	17.4
2100	**20**	62%	127	17.4	59%	128	16.4	56%	128	15.6
2100	**18**	51%	116	14.2	48%	116	13.4	46%	116	12.7
1900	**21.1**	64%	128	17.8	60%	129	16.8	57%	130	15.9
1900	**20**	57%	122	16	54%	123	15.1	51%	123	14.3
1900	**18**	47%	112	13.2	44%	112	12.4	42%	111	11.8

* *Propeller RPM*
** *Fuel Consumption for each Engine*

Weight: *1150 kg (2535 lb)*
Pressure Altitude: *12000 ft*

RPM*	MAP [inHg]	ISA – 30°C (-39°C)			ISA (-9°C)			ISA + 30°C (21°C)		
		PWR	KTAS	F.C.** [lt/hr]	PWR	KTAS	F.C.** [lt/hr]	PWR	KTAS	F.C.** [lt/hr]
2388	**18.8**	67%	135	18.8	63%	136	17.7	60%	136	16.7
2250	**18.8**	65%	133	18.2	61%	134	17.2	58%	134	16.3
2250	**18**	60%	129	16.8	57%	129	15.9	54%	129	15
2100	**18.8**	62%	130	17.4	59%	131	16.4	56%	132	15.5
2100	**18**	58%	126	16.1	54%	126	15.2	51%	126	14.4
1900	**18.8**	57%	125	15.9	54%	126	15	51%	126	14.2
1900	**18**	53%	121	14.8	50%	121	13.9	47%	121	13.2

* *Propeller RPM*
** *Fuel Consumption for each Engine*

15. LANDING PERFORMANCES

Weight = *1230 kg (2712 lb)*

Flaps: *LAND*
Short Final Approach Speed = *70 KIAS*
Throttle Levers: *Idle*
Runway: *Grass*

Corrections

Headwind: - 5m for each kt (*16 ft/kt*)

Tailwind: + 11m for each kt (*36ft/kt*)

Paved Runway: - *2%* to Ground Roll

Runway slope: - 2.5% to Ground Roll for each +1%

Pressure Altitude [ft]		Distance [m]				
		Temperature [°C]				ISA
		-25	0	25	50	
S.L.	Ground Roll	199	219	239	259	**231**
	At 50 ft AGL	308	334	359	384	**349**
1000	Ground Roll	206	227	248	269	**238**
	At 50 ft AGL	318	344	370	396	**358**
2000	Ground Roll	214	236	257	279	**245**
	At 50 ft AGL	328	355	382	408	**367**
3000	Ground Roll	222	244	267	289	**252**
	At 50 ft AGL	348	377	406	434	**385**
4000	Ground Roll	230	254	277	300	**260**
	At 50 ft AGL	348	377	406	434	**385**
5000	Ground Roll	239	263	287	311	**268**
	At 50 ft AGL	359	389	419	448	**395**
6000	Ground Roll	248	273	298	323	**276**
	At 50 ft AGL	371	402	432	463	**405**
7000	Ground Roll	258	284	310	336	**285**
	At 50 ft AGL	382	415	446	478	**416**
8000	Ground Roll	268	295	322	349	**294**
	At 50 ft AGL	395	428	461	494	**427**
9000	Ground Roll	278	306	334	362	**303**
	At 50 ft AGL	408	442	476	510	**438**
10000	Ground Roll	289	318	348	377	**313**
	At 50 ft AGL	421	457	492	527	**450**

Weight = *1080 kg (2381 lb)*

Flaps: *LAND*
Short Final Approach Speed = *70 KIAS*
Throttle Levers: *Idle*
Runway: *Grass*

Corrections

Headwind: - 5m for each kt (*16 ft/kt*)
Tailwind: + 11m for each kt (*36ft/kt*)
Paved Runway: - *2%* to Ground Roll
Runway slope: - 2.5% to Ground Roll for each +1%

Pressure Altitude [ft]		Distance [m]				
		Temperature [°C]				ISA
		-25	0	25	50	
S.L.	Ground Roll	175	192	210	227	**203**
	At 50 ft AGL	271	293	315	337	**306**
1000	Ground Roll	181	199	218	236	**209**
	At 50 ft AGL	279	302	325	348	**314**
2000	Ground Roll	188	207	226	245	**215**
	At 50 ft AGL	288	311	335	358	**322**
3000	Ground Roll	195	215	234	254	**222**
	At 50 ft AGL	306	331	356	381	**338**
4000	Ground Roll	202	223	243	263	**228**
	At 50 ft AGL	306	331	356	381	**338**
5000	Ground Roll	210	231	252	273	**235**
	At 50 ft AGL	315	342	368	394	**347**
6000	Ground Roll	218	240	262	284	**243**
	At 50 ft AGL	325	353	380	406	**356**
7000	Ground Roll	226	249	272	295	**250**
	At 50 ft AGL	336	364	392	420	**365**
8000	Ground Roll	235	259	283	306	**258**
	At 50 ft AGL	347	376	405	434	**375**
9000	Ground Roll	244	269	294	318	**266**
	At 50 ft AGL	358	388	418	448	**385**
10000	Ground Roll	254	280	305	331	**275**
	At 50 ft AGL	370	401	432	463	**395**

Weight = *930 kg (2051 lb)*
Flaps: *LAND*
Short Final Approach Speed = *70 KIAS*
Throttle Levers: *Idle*
Runway: *Grass*

Corrections

Headwind: - 5m for each kt (*16 ft/kt*)

Tailwind: + 11m for each kt (*36ft/kt*)

Paved Runway: - *2%* to Ground Roll

Runway slope: - 2.5% to Ground Roll for each +1%

Pressure Altitude [ft]		Distance [m]				
		Temperature [°C]				ISA
		-25	0	25	50	
S.L.	Ground Roll	150	166	181	196	**175**
	At 50 ft AGL	233	252	271	290	**264**
1000	Ground Roll	156	172	187	203	**180**
	At 50 ft AGL	240	260	280	299	**270**
2000	Ground Roll	162	178	194	211	**185**
	At 50 ft AGL	248	268	288	309	**277**
3000	Ground Roll	168	185	202	219	**191**
	At 50 ft AGL	263	285	307	328	**291**
4000	Ground Roll	174	192	209	227	**197**
	At 50 ft AGL	263	285	307	328	**291**
5000	Ground Roll	181	199	217	235	**203**
	At 50 ft AGL	272	294	317	339	**299**
6000	Ground Roll	188	207	226	244	**209**
	At 50 ft AGL	280	304	327	350	**307**
7000	Ground Roll	195	215	234	254	**215**
	At 50 ft AGL	289	313	338	361	**315**
8000	Ground Roll	203	223	243	264	**222**
	At 50 ft AGL	299	324	349	373	**323**
9000	Ground Roll	210	232	253	274	**229**
	At 50 ft AGL	308	334	360	386	**331**
10000	Ground Roll	219	241	263	285	**237**
	At 50 ft AGL	319	346	372	399	**340**

16. BALKED LANDING CLIMB GRADIENT

Flight conditions (ISA and SL):

Weight:	*1230 kg (2712 lb)*
Throttle levers	*Both FULL FORWARD*
Flaps	*T/O*
Landing gear	*DOWN*
Weight	*MTOW 1230kg (2712 lb)*
Speed	*72 KIAS*
Climb gradient	*9.4% (5.4°)*

17. NOISE DATA

Noise level, determined in accordance with ICAO/Annex 16 4th Ed., July 2005, Vol. I°, Chapter 10, is **72.82** dB(A).

INTENTIONALLY LEFT BLANK

Supplement G10: page replacement instructions

WEIGHT AND BALANCE

See Section 6 of the Basic Manual

Supplement G10: page replacement instructions

AIRFRAME and SYSTEMS DESCRIPTION

Apply following instruction:

Section 7 – AIRFRAME and SYSTEMS DESCRIPTION pages as per Supplement G1 instructions are still valid

SUPPLEMENT NO. G11 – VLO/VLE INCREASE

RECORD OF REVISIONS

Rev	Revised page	Description of Revision	Tecnam Approval			EASA Approval Or Under DOA Privileges
			DO	OoA	HDO	
0	all	Editorial change (*)	A. Sabino	C. Caruso	M. Oliva	DOA Approval

(*) This supplement was originally issued under EASA approval no. 10041602.

LOEP

Page	Revision
G11-1	Rev 0
G11-2	Rev 0
G11-3	Rev 0
G11-4	Rev 0
G11-5	Rev 0
G11-6	Rev 0

INTRODUCTION

This Supplement applies to aircraft equipped with Garmin G950 Integrated Flight Deck System (Design Change MOD 2006/002) and provides supplemental information to increase the Vlo/Vle when the Tecnam Service Bulletin SB 098-CS or Design Change MOD 2006/033 has been embodied on the airplane.

The information contained herein supersedes the basic Aircraft Flight Manual.

SECTION 2 - LIMITATIONS

SPEED LIMITATIONS

On the left side instrument panel, above on the left, it is placed the following placard reporting the speed limitations:

Maximum L.G. op. speed

V_{LO} / V_{LE} = 122 KIAS

INTENTIONALLY LEFT BLANK

SUPPLEMENT NO. G12 – SOUTH AFRICAN AFM

(SACAA APPROVED)

Record of Revisions

Rev	Revised page	Description of Revision	Tecnam Approval			EASA Approval Or Under DOA Privileges
			DO	OoA	HDO	
0	All	Editorial Change	A. Sabino	C. Caruso	M. Oliva	See Note (*)

Note (*): this Supplement has been originally issued on 2 May 2013, after EASA Third Country Validation process completion.

LOEP

Page	Revision	Page	Revision
G11-1	Rev 0	**G11-5**	Rev 0
G11-2	Rev 0	**G11-6**	Rev 0
G11-3	Rev 0	**G11-7**	Rev 0
G11-4	Rev 0	**G11-8**	Rev 0

TABLE OF CONTENTS

INTRODUCTION 4
LIMITATIONS 5
Maximum operating altitude 5
Inflight engine restart 5
GPS systems 6
GPS GNS 430 or GNS 530 operation (for airplanes with autopilot installed) 6
GPS GNS 430 or GNS 530 operation (for airplanes without autopilot installed) 6
WAAS and SBAS functionalities: 7

INTRODUCTION

This Supplement applies for South African registered aircraft

It contains supplemental information to the basic information approved in EASA aircraft Flight Manual when the aircraft is registered in South Africa.

For Limitations, procedures, and performance information not contained in this supplement, refer to the basic Aircraft Flight Manual.

The information contained herein supplements or supersedes the basic Aircraft Flight Manual or the Supplement G1, as applicable.

LIMITATIONS

MAXIMUM OPERATING ALTITUDE

Maximum operating altitude is 14000 ft (4260 m) MSL.

CAUTION

At altitudes between 10 000 feet (3048 m) and 12 000 feet (3658 m) for longer than 120 minutes intended flight time, or above 12 000 feet, the aircraft shall not be operated unless the aircrew is provided with the supplemental oxygen as prescribed in Document SA-CATS 91 and such oxygen may be used continuously whenever these circumstances prevail."

INFLIGHT ENGINE RESTART

The inflight engine restart procedure is reported on a placard (shown below) installed on the central console.

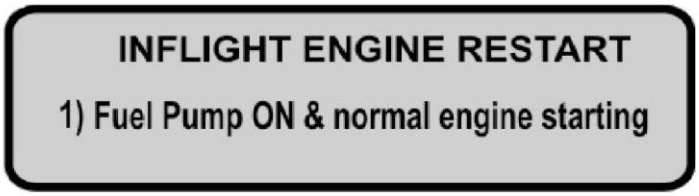

GPS SYSTEMS

GPS GNS 430 OR GNS 530 OPERATION (FOR AIRPLANES WITH AUTOPILOT INSTALLED)

- Use of GPS for precision approach navigation mode is not allowed.

- Use of GPS is prohibited as primary means for navigation. GPS is approved as supplemental means for navigation;

- Navigation using of the GPS system as the source of information is limited to IFR en route, terminal area and non-precision approach mode;

- During IFR in terminal area or non-precision approach using GPS, autopilot or flight director must be coupled to GPS.

- If RAIM function becomes unavailable in “en route” phase of flight, position must be verified every 15 minutes using other IFR approved navigation system;

- During IFR in terminal area or non-precision approach using GPS, in case RAIM function becomes unavailable, the GPS navigation must be discontinued;

- Before an IFR non-precision approach using GPS, the availability of the RAIM function must be checked to the time and place predicted (RAIM prediction). If predicted the unavailability of the RAIM function, navigation must be planned with others approved navigation systems;

- Before a non-precision approach using GPS, the database information must be compared with that in the approach chart, including transitions, position and altitude of waypoints;

- IFR non-precision approach using GPS must be based on the approved procedures of the equipment database. It cannot be done based on data manually included.

GPS GNS 430 OR GNS 530 OPERATION (FOR AIRPLANES WITHOUT AUTOPILOT INSTALLED)

- Use of GPS for precision approach navigation mode is not allowed.

- Use of GPS is prohibited as primary means for navigation. GPS is approved as supplemental means for navigation;

- Use of GPS is prohibited for IFR in terminal area or in non-precision approach operations;

- If RAIM function becomes unavailable in en route phase of flight, position must be verified every 15 minutes using other IFR approved navigation system.

WAAS AND SBAS FUNCTIONALITIES

The WAAS and SBAS functionalities are not available in South Africa and these functions are not tested or approved in South African air space.

INTENTIONALLY LEFT BLANK

SUPPLEMENT NO. G13 – ALTERNATORS WITH 70 A INSTALLATION

Record of Revisions

Rev	Revised page	Description of Revision	Tecnam Approval			EASA Approval Or Under DOA Privileges
			DO	OoA	HDO	
0	all	Editorial change	A. Sabino	C. Caruso	M. Oliva	DOA Privileges.
1	G13-1, 4, 5, 6	Electrical loads distribution updated	A. Glorioso	D. Ronca	M. Oliva	Approved under the authority of DOA, ref. EASA.21J.335 (MOD2006/380.191111)
2	G13-1, 4, 5, 6	Electrical loads distribution updated	G.Valentino	D. Ronca	M. Oliva	Approved under the authority of DOA, ref. EASA.21J.335 (MOD2006/382.200129)

List of Effective Pages

Page	Revision
G13-1	Rev 2
G13-2	Rev 0
G13-3	Rev 0
G13-4	Rev 2
G13-5	Rev 2
G13-6	Rev 2

INTRODUCTION

This section contains supplemental information to operate, in a safe and efficient manner, the aircraft when 70A alternators are installed replacing the standard, 40A ones (Design Change MOD 2006/202).

The information contained herein supplements or supersedes the basic Aircraft Flight Manual: detailed instructions are provided to allow the owner for replacing the AFM pages containing information amended as per the Design Change in subject.

It is the owner's responsibility to replace the mentioned pages in the AFM in accordance with the instructions herein addressed section by section.

GENERAL

When 70A alternators are installed replacing the standard, 40A ones, the electrical system logic is not affected by any substantial change. Primary DC power is provided by two engine-driven alternators which, during normal operations, operate in parallel.

Each alternator is rated at 14,2-14,8 Vdc (through two external voltage regulators), 70 Amp and is provided with an automatic overvoltage device protecting the circuits and the electric components from an excessive voltage caused by alternator's failures.

The power rating of the each generator is such that if one generator fails the other one can still supply the airplane equipment to maintain flight safety.

SECTION 3 - EMERGENCY PROCEDURES

This section report some procedures which replace the same procedure in the basic AFM.
The procedures affected from the replacement of existing 40A alternators with 70A are the following:

- **Single alternator failure/overvoltage**
- **Both alternators failure**
- **Both alternators overvoltage**

SINGLE ALTERNATOR FAILURE / OVERVOLTAGE

Annunciation window	Alert window
L ALT FAIL	Lh Alternator

OR

R ALT FAIL	Rh Alternator

1. FIELD LH (or RH) *OFF*
2. FIELD LH (or RH) *ON*

<u>If the LH (or RH) ALT caution stays displayed</u>

3. FIELD LH (or RH) *OFF*

NOTE *The battery and a single generator are able to supply the electrical power necessary for flight, but redundancy is lost.*

Equipment will be lost accordingly to the following table:

LH Gen Bus	LH Avionic Bus	RH Avionic Bus	RH Gen Bus
Taxi Light	Trim A/P	COM 2	Rudder Trim
Pitot Heat	A/P	MFD	Co.pilot seat
Voltage regulator	XPDR	ADF (if installed)	Voltage regulator RH
Cabin Fan	DME	GPS/NAV 2	NAV Light
	Turn coord	Converter 12/28	Audio panel
	TCAS (if installed)	12V socket	Avionic Fan

4. Land as soon as practicable

BOTH ALTERNATORS FAILURE

Annunciation window	Alert window
L ALT FAIL	Lh Alternator
R ALT FAIL	Rh Alternator

In event of both L and R ALT FAIL caution alerts displayed:

1. FIELD LH and RH *BOTH OFF*
2. FIELD LH and RH *BOTH ON (one at a time)*

If the LH (or RH) ALT caution stays displayed

1. Verify good ammeter indications on restored alternator
2. Refer to Single alternator failure / overvoltage drill (Para 2.1)

If both LH and RH ALT cautions stay displayed

3. FIELD LH and RH *BOTH OFF*
4. CROSS BUS LH and RH *BOTH OFF*

If engine starting battery modification is applied

5. EMERG BATT switch ON
6. **Land as soon as possible.**

If engine starting battery modification is not applied

5. **Land as soon as possible.**

Equipment will be lost accordingly to the following table:

LH Gen Bus	LH Avionic Bus	RH Avionic Bus	RH Gen Bus
Taxi Light	Trim A/P	COM 2	Rudder Trim
Pitot Heat	A/P	MFD	Co.pilot seat
Voltage regulator	XPDR	ADF (if installed)	Voltage regulator RH
Cabin Fan	DME	GPS/NAV 2	NAV Light
	Turn coord	Converter 12/28	Audio panel
	TCAS (if installed)	12V socket	Avionic Fan

NOTE *The battery will supply electrical power for at least 30 minutes.*

BOTH ALTERNATORS OVERVOLTAGE

Annunciation window	Alert window
L BUS VOLT HIGH	Lh overvoltage
R BUS VOLT HIGH	Rh overvoltage

In event of both L and R BUS VOLT HIGH warning alerts displayed:

1. FIELD LH and RH *BOTH OFF*
2. FIELD LH and RH *BOTH ON (one at a time)*

If the LH (or RH) BUS VOLT HIGH caution stays displayed

3. Verify good ammeter indications on restored alternator
4. Refer to Single alternator failure / overvoltage drill (Para 2.1)

If both LH and RH BUS VOLT HIGH warning stay displayed

3. CROSS BUS LH and RH *BOTH OFF*
4. FIELD LH and RH *BOTH OFF*
5. FIELD LH and RH *BOTH ON (one at a time)*

If LH (or RH) BUS VOLT HIGH warning stays displayed

6. Verify good ammeter indications on restored alternator
7. Switch CROSS BUS on the restored alternator side
8. Refer to Single alternator failure / overvoltage drill (Para 2.1)

If both LH and RH BUS VOLT HIGH warning stay displayed

7. FIELD LH and RH *BOTH OFF*

If engine starting battery modification is applied

7. EMERG BATT switch ON
8. **Land as soon as possible.**

If engine starting battery modification is not applied

8. **Land as soon as possible.**

Equipment will be lost accordingly to the following table:

LH Gen Bus	LH Avionic Bus	RH Avionic Bus	RH Gen Bus
Taxi Light	Trim A/P	COM 2	Rudder Trim
Pitot Heat	A/P	MFD	Co.pilot seat
Voltage regulator	XPDR	ADF (if installed)	Voltage regulator RH
Cabin Fan	DME	GPS/NAV 2	NAV Light
	Turn coord	Converter 12/28	Audio panel
	TCAS (if installed)	12V socket	Avionic Fan

NOTE *The battery can supply electrical power for at least 30 minutes.*

SUPPLEMENT NO. G14

SMP FOR GARMIN G950 AVIONICS

RECORD OF REVISIONS

Rev	Revised page	Description of Revision	Tecnam Approval			EASA Approval Or Under DOA Privileges
			DO	OoA	HDO	
0	-	First issue	D. Ronca	C. Caruso	M. Oliva	DOA Approval
1	S4-26	Integration of information formerly contained in Supplement G18.	A. Sabino	C. Caruso	M. Oliva	DOA Approval
2	G14-1,2	Title changed.	A. Sabino	C. Caruso	M. Oliva	Approved under the authority of DOA ref. EASA.21J.335 (MOD2006/345.181120)
	SMP4-27	Procedure amended.				

LOEP

	Pages	Revision
Cover pages	G14 – 3 thru 22	*Rev. 0*
	G14 – 1, 2	*Rev. 2*
Section 2	SMP2 – 3	*Rev. 0*
Section 3	SSMP3 – 3 thru 5	*Rev. 0*
	SSMP3 – 7 thru 9	*Rev. 0*
	SSMP3 – 21	*Rev. 0*
	SSMP3 – 29	*Rev. 0*
	SSMP3 – 36 thru 40	*Rev. 0*
	SSMP3 – 49 thru 53	*Rev. 0*
Section 4	SSMP4 – 26	*Rev. 1*
	SSMP4 – 27	*Rev. 2*
Section 7	SSMP7 – 41	*Rev. 0*
	SSMP7 – 44 thru 48	*Rev. 0*

INTRODUCTION

This section contains supplemental information to operate, in a safe and efficient manner, the aircraft when equipped with Garmin G950 Integrated Flight Deck System (Design Change MOD 2006/002) and with Special Mission Platform. The Special Mission Platform refers to the following design changes:

- MOD2006/046 - Power supply from built-in generators
- MOD2006/202 - Replacement of existing 40A alternators with 70A
- MOD2006/204 - Installation of converter box

For the two first design changes the supplements (n° A15 and G13) are already approved by EASA and in this supplement we report the same information for reference.

The Rotax engine built-in generators, one for each engine, feed two bus bars made available for end user equipment, when the design change 2006/046 is installed.

When 70A alternators are installed replacing the standard, 40A ones, the electrical system logic is not affected by any substantial change. Primary DC power is provided by two engine-driven alternators which, during normal operations, operate in parallel.

Each alternator is rated at 14,2-14,8 Vdc (through two external, first fuselage frame installed voltage regulators), 70 Amp and is provided with an automatic overvoltage device protecting the circuits and the electric components from an excessive voltage caused by alternator's failures.

The power rating of the each generator is such that if one generator fails the other one can still supply the airplane equipment to maintain flight safety.

The information contained herein supplements or supersedes the basic Aircraft Flight Manual or the Supplement G1, as applicable: detailed instructions are provided to allow the owner for replacing the Basic AFM/Supplement G1 pages containing information amended as per the Design Changes in subject.

NOTE

Usually, the Special Mission Platform P2006T is also equipped with holes in the cabin and/or tailcone, ready for third parties sensor's integration. While the Tecnam intent is to offer a platform ready for sensors' integration, it is end-user responsibility to receive the approval from authority for each equipment installation.

It is the owner's/operator's responsibility to replace the mentioned pages in the AFM in accordance with the instructions herein addressed section by section.

INTENTIONALLY LEFT BLANK

Supplement G14: pages replacement instructions

SECTION 1 – GENERAL

Apply following instruction:

See Basic AFM - Section 1

INTENTIONALLY LEFT BLANK

Supplement G14: pages replacement instructions

SECTION 2 – LIMITATIONS

Apply following pages replacement procedure:

Supplement G14 - LIMITATIONS page		Basic AFM Section 2 page
SMP2 – 3	**REPLACES**	Page 2 – 3 of Basic AFM, Section 2

INTENTIONALLY LEFT BLANK

1. INTRODUCTION

Section 2 includes operating limitations, instrument markings and basic placards necessary for safe operation of ***P2006T*** aircraft, its engines and standard systems and equipment.

LH and RH AUX FIELDS, enabling the converter box operations for Special Mission purposes, should be kept OFF during take-off, climb, landing and any abnormal procedure that affects electrical generating system (including single engine operation):

During Take-off, Climb, Landing and Single Engine Operations:

LH and RH AUX FIELD switches ***BOTH OFF***

NOTE *This limitation only applies when both 70Amp alternators and converter box are installed.*

NOTE *Safety provisions, as following described, automatically disengage the LH and RH AUX FIELDS in case of one main field malfunction (i.e. for OEI). Also, if only one AUX FIELD switch is ON, the converter box is not powered.*

INTENTIONALLY LEFT BLANK

Supplement G14: pages replacement instructions

SECTION 3 – EMERGENCY PROCEDURES

Apply following pages replacement procedure:

Supplement G14 - EMERGENCY PROCEDURES page		Supplement G1 Section 3 page
SSMP3 – 3 thru 5	**REPLACE**	Page S3 – 3 thru 5 of Supplement G1, Section 3
SSMP3 – 7 thru 9	**REPLACE**	Page S3 – 8 thru 11 of Supplement G1, Section 3
SSMP3 – 21	**REPLACES**	Page S3 – 21 of Supplement G1, Section 3
SSMP3 – 29	**REPLACES**	Page S3 – 29 of Supplement G1, Section 3
SSMP3 – 36 thru 40	**REPLACE**	Page S3 – 36 thru 40 of Supplement G1, Section 3
SSMP3 – 49 thru 53	**REPLACE**	Page S3 – 49 thru 53 of Supplement G1, Section 3

INTENTIONALLY LEFT BLANK

1. INTRODUCTION

Section 3 includes checklists and detailed procedures for coping with various types of emergency conditions that could arise after a system failure.

The procedures affected from installation of the Special Mission Platform are the following:

- **Single alternator failure / overvoltage**
- **Both alternators failure**
- **Both alternators overvoltage**
- **Engine securing**
- **Total electrical failure**
- **Inflight engine restart**
- **Engine failure during takeoff run**
- **Engine failure during climb**
- **Engine failure in flight**
- **Engine fire on the ground**
- **Engine fire during takeoff run**
- **Engine fire in flight**
- **Electrical smoke in cabin on the ground**
- **Electrical smoke in cabin during flight**

The main difference regarding aircraft systems, compared with the basic AFM, is the presence of the Power supply from built-in generators, Alternators with 70A and Converter Box. The powering and disconnection of converter box is very simple and, in most of abnormal cases, is automatically managed by relays and safety provisions.
The converter box (following described in Section 7) is managed by the pilot only via two switches, located in the bottom LH side of pilot seat on a single panel provided by: two switches, two breakers and two indicating lamps.
Only when pilot selects BOTH switches ON (right and left AUX) and both alternators are operative the system allows a surplus of power generated by the engines and alternators to flow into 4x converters and, then, into mission equipment, when installed.
The health status of converters inside the box (located into the baggage compartment) is monitored by mission operator, via 4x failure indicating lamps. Following the key concepts when managing converter boxes:

1. Mission Power Switches: they enable the converter box ONLY when BOTH are set to ON;
2. Converter box power: enabled only if both LH and RH main alternators are generating power;
3. Converter box: automatically switches OFF in case LH or RH main alternators is faulty / not generating;
4. Converter box: automatically switches OFF in case LH or RH mission switch is set to OFF;

5. Failure lamp: when illuminated, indicates that the correspondent converter is not working properly and needs to be replaced if the maximum available power from converter box is needed. When all converters are working properly, the system is capable to output 40A@28V. If one converter fails, 12A@28V are lost. For this reason, the end-user mission can continue if the equipment demand is less than 25/28A. On the contrary, the converter needs to be replaced.

Before operating the aircraft, the pilot/operator should become thoroughly familiar with this manual and, in particular, with this Section. Further on a continued and appropriate training and self study should be done.

Two types of emergency procedures are hereby given.

a. "BOLD FACES" which must be known by heart by the pilot and executed, in the correct and complete sequence, immediately after the failure is detected and confirmed.

   These procedures characters are boxed and highlighted:

1.1 ENGINE FAILURE DURING TAKEOFF RUN

BEFORE ROTATION: ABORT TAKE OFF		
1.	**Throttle Lever**	***BOTH IDLE***
2.	**Rudder**	***Keep heading control***
3.	**- -**	
4.	**- -**	

b. "other procedures" which should be well theoretically known and mastered, but that can be executed entering and following step by step the AFM current section appropriate checklist.

Additionally operating the aircraft, the pilot should become thoroughly familiar with the Garmin G950 Pilot's Guide for Tecnam P2006T (P/N 190-01146-XX) – last issue - and, in particular, with the present AFM Section.

CAUTION

Garmin G950 Pilot's Guide for Tecnam P2006T (P/N 190-01146-XX) – last issue - must be carried onboard the airplane at all times.

WARNING

Garmin G950 has a very high degree of functional integrity. However, the pilot must recognize that providing monitoring and/or self-test capability for all conceivable system failures is not practical. Although unlikely, it may be possible for erroneous operation to occur without a fault indication shown by the G950. It is thus the responsibility of the pilot to detect such an occurrence by means of crosschecking with all redundant or correlated information available in the cockpit.

In any case, as a failure or abnormal behaviour is detected pilots should act as follows:

1. Keep self-control and maintain aircraft flight attitude and parameters
2. Analyse the situation identifying, if required, the area for a possible emergency landing
3. Apply the pertinent procedure
4. Inform the Air Traffic Control as applicable

NOTE

For the safe conduct of later flights, any anomaly and/or failure must be communicated to the National Authorities in charge, in order to put the aircraft in a fully operational and safe condition.

NOTE

*In this Chapter, following definitions apply**:***
***Land as soon as possible**: land without delay at the nearest suitable area at which a safe approach and landing is assured.*

***Land as soon as practical**: land at the nearest approved landing area where suitable repairs can be made.*

2.1. SINGLE ALTERNATOR FAILURE / OVERVOLTAGE

Annunciation window	Alert window
L ALT FAIL	Lh Alternator

OR

R ALT FAIL	Rh Alternator

1. FIELD LH (or RH) *OFF*
2. LH and RH AUX FIELD switch *BOTH OFF*
3. FIELD LH (or RH) *ON*

<u>If the LH (or RH) ALT caution stays displayed</u>

1. FIELD LH (or RH) *OFF*

<u>If the LH (or RH) GENERATOR caution persists displayed</u>

1. CROSS BUS LH (or RH) *OFF*
2. **Land as soon as practical.**

NOTE *The battery and a single generator are able to supply the electrical power necessary for the entire mission, but redundancy is lost.*

2.2 BOTH ALTERNATORS FAILURE

Annunciation window	Alert window
L ALT FAIL	Lh Alternator
R ALT FAIL	Rh Alternator

In event of both L and R ALT FAIL caution alerts displayed:

1. FIELD LH and RH *BOTH OFF*
2. LH and RH AUX FIELD switch *BOTH OFF*
3. FIELD LH and RH *BOTH ON*

If both LH and RH ALT cautions stay displayed

1. FIELD LH and RH *BOTH OFF*
2. CROSS BUS LH and RH *BOTH OFF*

If engine starting battery modification is applied

1. EMERG BATT switch ON
2. **Land as soon as possible.**

If engine starting battery modification is not applied

1. **Land as soon as possible.**

NOTE *The battery can supply electrical power for at least 30 minutes.*

2.3 BOTH ALTERNATORS OVERVOLTAGE

Annunciation window	Alert window
L BUS VOLT HIGH	Lh overvoltage
R BUS VOLT HIGH	Rh overvoltage

In event of both L and R BUS VOLT HIGH warning alerts displayed:

1. FIELD LH and RH *BOTH OFF*
2. LH and RH AUX FIELD switch *BOTH OFF*
3. FIELD LH and RH *BOTH ON (one at a time)*

<u>if LH (or RH) OVERVOLT warning stays displayed</u>

1. FIELD LH (or RH) *OFF*

<u>if both LH and RH OVERVOLT warning stay displayed</u>

1. CROSS BUS LH and RH *BOTH OFF*
2. FIELD LH and RH *BOTH OFF*
3. FIELD LH and RH *BOTH ON (one at a time)*

If LH (or RH) OVERVOLT warningt stays displayed

1. FIELD LH (or RH) *OFF*
2. CROSS BUS LH (or RH) *ON*

If both LH and RH OVERVOLT warning stay displayed

1. FIELD LH and RH *BOTH OFF*
2. CROSS BUS LH and RH *BOTH OFF*

<u>If engine starting battery modification is applied</u>

1. EMERG BATT switch ON
2. **Land as soon as possible.**

<u>If engine starting battery modification is not applied</u>

1. **Land as soon as possible.**

NOTE *The battery can supply electrical power for at least 30 minutes.*

3. ENGINE SECURING

Following procedure is applicable to shut-down one engine in flight:

1. Throttle Lever	***IDLE***
2. Ignition	***BOTH OFF***
3. Propeller Lever	***FEATHER***
4. Fuel Selector	***OFF***
5. Electrical fuel pump	***OFF***
6. LH and RH AUX FIELD switch	***BOTH OFF***

NOTE *If necessary, this procedure is applicable to both engines. When both engines are secured, both CROSS BUS switches must be set to OFF.*

After securing engine(s), after analysing situation, refer immediately to following procedures:

ENGINE FAILURE IN FLIGHT:	see Para. 6.5
SINGLE GENERATOR FAILURE:	see Para. 2.1
or BOTH GENERATOR FAILURE:	see Para. 2.2
INFLIGHT ENGINE RESTART:	see Para. 6.2
ONE ENGINE INOPERATIVE LANDING:	see Para. 6.6
or LANDING WITHOUT ENGINE POWER:	see Para. 10.1

5. OTHER EMERGENCIES

5.1 EMERGENCY DESCENT

CAUTION

Descent with airspeed at VLE, idle power and gear down will provide high descent rates and pitch attitudes up to -15° .

Anticipate altitude capture and return to level flight during emergency descent in order to assure a safe and smooth recovery from maneuver.

1.	Power levers	*IDLE*
2.	Flaps	*UP*
3.	IAS	*below VLO/VLE*
4.	Landing gear	*DOWN*
5.	Airspeed	*Up to VLE*

5.2 TOTAL ELECTRICAL FAILURE

In case of electrical system overall failure, apply following procedure:

1.	Emergency light	*ON*
2.	Standby attitude indicator switch	*ON*
3.	MASTER SWITCH	*OFF*
4.	FIELD LH and RH	*BOTH OFF*
5.	LH and RH AUX FIELD switch	*BOTH OFF*
6.	MASTER SWITCH	*ON*
7.	FIELD LH and RH	*BOTH ON*

<u>If failure persists</u>

9.	EMERG BATT switch	ON (if engine starting battery installed)

10. **Land as soon as possible** applying *emergency landing gear extension* procedure (see Para. 7.1)

WARNING

An electrical system overall failure prevents flaps operation: landing distance without flaps increases of about 25%.

CAUTION

A fully charged battery can supply electrical power for at least 30 minutes.

6.2 INFLIGHT ENGINE RESTART

WARNING

After:

- *mechanical engine seizure;*
- *fire;*
- *major propeller damage*

engine restart is not recommended.

1.	Carburettor heat	*ON if required*
2.	Electrical fuel pump	*ON*
3.	Fuel quantity indicator	*CHECK*
4.	Fuel Selector	*CHECK (Crossfeed if required)*
5.	FIELD	*OFF*
6.	LH and RH AUX FIELD switch	*BOTH OFF*
7.	Ignition	*BOTH ON*
8.	Operating engine Throttle Lever	*SET as practical*
9.	Stopped engine Throttle Lever	*IDLE*
10.	Stopped engine Propeller Lever	*FULL FORWARD*
11.	Start push-button	*PUSH*
12.	Propeller Lever	*SET at desired rpm*
13.	FIELD	*ON (check for positive ammeter)*
14.	Engine throttle levers	*SET as required*

<u>If engine restart is unsuccessful</u>

15.	EMERG BATT switch	ON (if starting battery installed)
16.	Repeat engine restart procedure	

CAUTION

After engine restart, if practical, moderate propeller rpm and throttle increase to allow OIL and CHT/CT temperatures for stabilizing in the green arcs.

NOTE

If the fuel quantity in the tank which feeds the stopped engine is low, select the opposite side fuel tank by means of the fuel selector.

<u>If engine restart is still unsuccessful:</u>

17.	Affected engine	*SECURE (see engine securing procedure Para. 3)*

18. **Land as soon as possible** applying *one engine inoperative landing* procedure. See Para. 6.6

6.3 ENGINE FAILURE DURING TAKEOFF RUN

BEFORE ROTATION: ABORT TAKE OFF

1.	**Throttle Lever**	***BOTH IDLE***
2.	**Rudder**	***Keep heading control***
3.	**Brakes**	***As required***

When safely stopped:

4.	Failed Engine Ignition	BOTH OFF
5.	Failed Engine Field	*OFF*
6.	LH and RH AUX FIELD switch	*BOTH OFF*
7.	Failed Engine Electrical fuel pump	*OFF*

IF THE DECISION IS TAKEN TO CONTINUE THE TAKEOFF:

WARNING

A take-off abort should always be preferred if a safe stop can be performed on ground.

A suggested "GO-NO-GO" criteria is: abort take-off until LG is still down and locked.

Once airborne accelerate to Blue Line Speed (V_{YSE}) before commanding LG retraction.

Take-off planning should take into account that high density altitude and aircraft mass may result in OEI negative climb rate.

V_{YSE} with flap up shall be flown in order to achieve best possible rate of climb after landing gear retraction and engine feathering.

1.	**Operating engine Throttle Lever**	***FULL POWER***
2.	**Operating engine Propeller Lever**	***FULL FORWARD***
3.	**Heading**	***Keep control using rudder and ailerons***
4.	**Attitude**	***Reduce as appropriate to keep airspeed over 62 KIAS***
5.	**Inoperative engine Propeller Lever**	***FEATHER***
6.	**Landing gear control lever**	***UP***
7.	**Airspeed**	***V_{XSE}/V_{YSE} as required***
8.	**Flaps**	***0°***
9.	**LH and RH AUX FIELD switch**	***BOTH OFF***

6.4 ENGINE FAILURE DURING CLIMB

1.	**Autopilot**	**OFF**
2.	**Heading**	***Keep control using rudder and ailerons***
3.	**Attitude**	***Reduce as appropriate to keep airspeed over 62 KIAS***

4.	Operating engine Throttle Lever	*FULL THROTTLE*
5.	Operating engine Propeller Lever	*FULL FORWARD*
6.	Operative engine Electrical fuel pump	*Check ON*
7.	LH and RH AUX FIELD switch	*BOTH OFF*
8.	Inoperative engine Propeller Lever	*FEATHER*
9.	Inoperative engine	Confirm and *SECURE*

If engine restart is possible:

10. Apply INFLIGHT ENGINE RESTART procedure *see Para 6.2*

If engine restart is unsuccessful or it is not recommended:

11. **Land as soon as possible**
12. One engine inoperative landing procedure. *see Para. 6.6*

WARNING

Following a mechanical engine seizure, fire or a major propeller damage engine restart is not recommended.

WARNING

Continuation of flight to a safe landing runway must be planned taking into account maximum operating ceiling in OEI condition. Refer to Section 5 Para 1, "One-engine rate of climb".

6.5 ENGINE FAILURE IN FLIGHT

1.	**Autopilot**	***OFF***
2.	**Heading**	***Keep control using rudder and ailerons***
3.	**Attitude**	***Adjust as appropriate to keep airspeed over 62 KIAS***

4.	LH and RH AUX FIELD switch	*BOTH OFF*
5.	Operating engine	*Monitor engine instruments*
6.	Operative engine Electrical fuel pump	*Check ON*
7.	Operating engine Fuel Selector	*Check correct feeding (crossfeed if needed)*

<u>If engine restart is possible:</u>

8.	Apply INFLIGHT ENGINE RESTART procedure	*see Para 6.2*

<u>If engine restart is unsuccessful or it is not recommended:</u>

9.	Land as soon as possible	
10.	One engine inoperative landing procedure.	*see Para. 6.6*

WARNING

Following a mechanical engine seizure, fire or a major propeller damage engine restart is not recommended.

WARNING

Continuation of flight to a safe landing runway must be planned taking into account maximum operating ceiling in OEI condition. Refer to Section 5 Para 12. Rate of climb with One Engine Inoperative.

8 SMOKE AND FIRE OCCURRENCE

8.1 ENGINE FIRE ON THE GROUND

1.	**Fuel Selectors**	***BOTH OFF***
2.	**Ignitions**	***ALL OFF***
3.	**LH and RH AUX FIELD switch**	***BOTH OFF***
4.	**Electrical fuel pumps**	***BOTH OFF***
5.	**Cabin heat and defrost**	***OFF***
6.	**MASTER SWITCH**	***OFF***
7.	**Parking Brake**	***ENGAGED***
8.	**Aircraft Evacuation**	**carry out immediately**

WARNING

Consider use of ditching emergency exit to escape in case pilot or passenger doors are blocked, watch for engine hot parts, fuel, hydraulic fluid or oil spills. Leave aircraft in upwind direction.

8.2 ENGINE FIRE DURING TAKEOFF RUN

BEFORE ROTATION: ABORT TAKE OFF

1.	**Throttle Lever**	**BOTH IDLE**
2.	**Rudder**	***Keep heading control***
3.	**Brakes**	***As required***

With aircraft under control

4.	**Fuel Selector**	***BOTH OFF***
5.	**Ignitions**	***ALL OFF***
6.	**LH and RH AUX FIELD switch**	***BOTH OFF***
7.	**Electrical fuel pump**	***BOTH OFF***
8.	**Cabin heat and defrost**	***OFF***
9.	**MASTER SWITCH**	***OFF***
10.	**Parking Brake**	***ENGAGED***
11.	**Aircraft Evacuation**	***carry out immediately***

WARNING

Consider use of ditching emergency exit to escape in case pilot or passenger doors are blocked, watch for engine hot parts, fuel, hydraulic fluid or oil spills. Leave aircraft in upwind direction.

IF THE DECISION IS TAKEN TO CONTINUE THE TAKEOFF:

WARNING

A take-off abort should always be preferred if a safe stop can be performed on ground.

A suggested "GO-NO-GO" criteria is: abort take-off until LG is still down and locked.

Once airborne accelerate to Blue Line Speed (V_{YSE}) before commanding LG retraction.

Take-off planning should take into account that high density altitude and aircraft mass may result in OEI negative climb rate.

V_{YSE} with flap up shall be flown in order to achieve best possible rate of climb after landing gear retraction and engine feathering.

1.	**Operating engine Throttle Lever**	***FULL POWER***
2.	**Operating engine Propeller Lever**	***FULL FORWARD***
3.	**Heading**	***Keep control using rudder and ailerons***
4.	**Attitude**	***Reduce as appropriate to keep airspeed over 62 KIAS***
5.	**Fire affected engine Propeller Lever**	***FEATHER***
6.	**Landing gear control lever**	***UP***
7.	**Airspeed**	***V_{XSE}/V_{YSE} as required***
8.	**Flaps**	***0°***

At safe altitude

9.	LH and RH AUX FIELD switch	*BOTH OFF*
10.	Cabin heat and defrost	*BOTH OFF*
11.	Fire affected engine Fuel Selector	*Confirm and OFF*
12.	Fire affected engine Ignitions	*Confirm and BOTH OFF*
13.	Fire affected engine Electrical fuel pump	*Confirm and OFF*
14.	Fire affected engine FIELD	*OFF*

15. **Land as soon as possible** applying *one engine inoperative landing* procedure. See Para. 6.6

8.3 ENGINE FIRE IN FLIGHT

1.	**Cabin heat and defrost**	***BOTH OFF***
2.	**LH and RH AUX FIELD switch**	***BOTH OFF***
3.	**Autopilot**	***OFF***
4.	**Fire affected engine Fuel Selector**	***Confirm and OFF***
5.	**Fire affected engine Ignition**	***Confirm and BOTH OFF***
6.	**Fire affected engine Throttle Lever**	***Confirm and FULL FORWARD***
7.	**Fire affected engine Propeller Lever**	***Confirm and FEATHER***
8.	**Fire affected engine Electrical fuel pump**	***OFF***
9.	**Heading**	***Keep control using rudder and ailerons***
10.	**Attitude**	***Adjust as appropriate to keep airspeed over 62 KIAS***
11.	**Fire affected engine Field**	***OFF***
12.	**Cabin ventilation**	***OPEN***

13. **Land as soon as possible** applying *one engine inoperative landing* procedure. See Para. 6.6

8.4 ELECTRICAL SMOKE IN CABIN ON THE GROUND

1.	**MASTER SWITCH**	***OFF***
2.	**Cabin heat and defrost**	***OFF***
3.	**LH and RH AUX FIELD switch**	***BOTH OFF***
4.	**Throttle Lever**	***BOTH IDLE***
5.	**Ignitions**	***ALL OFF***
6.	**Fuel Selector**	***BOTH OFF***
7.	**Parking Brake**	***ENGAGED***
8.	**Aircraft Evacuation**	**carry out immediately**

WARNING

Consider use of ditching emergency exit to escape in case pilot or passenger doors are blocked, watch for engine hot parts, fuel, hydraulic fluid or oil spills. Leave aircraft in upwind direction.

8.5 ELECTRICAL SMOKE IN CABIN DURING FLIGHT

1. Cabin ventilation	***OPEN***
2. Emergency light	***ON***
3. Standby attitude indicator switch	***ON***
4. Gain VMC conditions as soon as possible	

In case of cockpit fire:

5. Fire extinguisher	***use toward base of flames***

CAUTION

A tripped circuit breaker should not be reset.

If smoke persists, shed electrical supply in order to isolate faulty source by:

6. FIELD LH and RH	*OFF*
7. LH and RH AUX FIELD switch	*BOTH OFF*
8. AVIONICS LH and RH	*OFF*
9. CROSS BUS LH and RH	*BOTH OFF*

CAUTION

A fully charged battery can supply electrical power for at least 30 minutes.

If faulty source is found:

10. It may be possible to restore non faulty power sources (one at a time)

If smoke persists:

WARNING

Before total electrical system shutdown consider gaining VMC condition, at night set personal emergency light on.

Only emergency light and emergency ADI will be electrically powered.

All radio COM and NAV, Landing Gear lever (normal mode) and indication lights, electrical trims and flaps will be unserviceable.

11. MASTER SWITCH *OFF*

12. **Land as soon as possible**

INTENTIONALLY LEFT BLANK

Supplement G14: pages replacement instructions

SECTION 4 – NORMAL PROCEDURES

Apply following pages replacement procedure:

Supplement G14 - NORMAL PROCEDURES page		Supplement S1 Section 4 page
SSMP4 – 26 thru 27	**REPLACE**	Page S4 – 26 thru 27 of Supplement G1, Section 4

INTENTIONALLY LEFT BLANK

3.10 CRUISE

1 LH and RH Propeller Lever *SET to 1900-2250 RPM*

CAUTION

Throttles MAP decrease should be made before propeller speed reduction below 2200 RPM, as, contrariwise, Propeller Lever increase RPM should be set before engine Throttle Levers are advanced.

2 Engine parameters check (LH and RH)

- Oil temperature: *90° - 110 ° C*
  (or 50° - 130° C, if MOD2006/002 is applied)
- CHT / CT: *50° - 135° / 50° - 120 °C*
- Oil pressure: *2 - 5 bar.*
- Fuel pressure: *2.2 – 5.8 psi*
  **2.2 – 7.26 psi (0.15 – 0.50 bar)*

**applicable for fuel pump part no.893110 and no.893114*

3 Carburettor heat as needed *(see also instructions addressed on Section 3*

WARNING

Deselect and do not use Auto Pilot if possible icing condition area is inadvertently entered.

4 Fuel balance and crossfeed *check as necessary*

NOTE

To evaporate possibly accumulated condensation water, once per flight day (for approximately 5 minutes) 100° C (212° F) oil temperature must be reached.

3.10.1 CONVERTER BOX TURN ON

1	LH and RH AUX FIELD	*ON*
2	Converter Box	*Check enabled (no fail lamps)*
3	Mission systems	*Use as required*

3.10.2 CONVERTER BOX TURN OFF

1	Mission systems	*Shut down as necessary*
2	LH and RH AUX FIELD	*OFF*
3	Green lamps on switch panel	*Check OFF*

3.11 TURBULENT AIR OPERATION

In keeping with good operating practice used in all aircraft, it is recommended that when turbulent air is encountered or expected, the airspeed be reduced to maneuvering speed to reduce the structural loads caused by gusts and to allow for inadvertent speed build-ups, which may occur as a result of the turbulence or of distractions caused by the conditions.

3.12 DESCENT AND APPROACH

1	Propellers	*As required*
NOTE	*In order to control engine cooling and life, it is preferable to descend with power above idle and RPM lower than full continuous.*	
2	Carburettors heat	*As required*
3	Altimeter setting	*QNH set and crosscheck*
4	Rear passengers seats	*Set at full aft position*

3.13 BEFORE LANDING

1	Rear passengers seats	*Seats set at full aft and lower position*
2	LH and RH Electrical Fuel pump	*BOTH ON*
3	On downwind leg:	*Flaps T/O*
4	Speed below applicable VLO/VLE	*Landing gear control knob - DOWN – Check green lights ON*
5	Carburettors heat	*CHECK OFF*
6	LH and RH Propeller Lever	*FULL FORWARD*
7	On final leg: speed below 93 KIAS	*Flaps FULL*
8	Final Approach Speed	
9	Landing and taxi light	*ON*
10	Touchdown speed	*65 KIAS*

MTOW 1180kg	MTOW 1230 kg
V_{FE}= *119KIAS*	V_{FE}=*122KIAS*

MTOW 1180kg	MTOW 1230 kg
V_{APP}= *70KIAS*	V_{APP}=*71KIAS*

Supplement G14: pages replacement instructions

SECTION 5 – PERFORMANCE

Apply following instruction:

See Basic AFM - Section 5

NOTE

Usually, the Special Mission Platform P2006T is also equipped with holes in the cabin and/or tailcone, ready for third parties sensor's integration. While the Tecnam intent is to offer a platform ready for sensors' integration, it is end-user responsibility to receive the approval from authority for each equipment installation, including the supplement of Section 5, should the equipment affect it (i.e. protruding cameras).

INTENTIONALLY LEFT BLANK

Supplement G14: pages replacement instructions

SECTION 6 – WEIGHT AND BALANCE

Apply following instruction:

See Basic AFM - Section 6

INTENTIONALLY LEFT BLANK

Supplement G14: pages replacement instructions

SECTION 7 – AIRFRAME AND SYSTEMS DESCRIPTION

Apply following pages replacement procedure:

Supplement G14 - AIRFRAME AND SYSTEMS DESCRIPTION page		Supplement S1 Section 7 page
SSMP7 – 41	**REPLACES**	Page S7 – 41 of Supplement G1, Section 7
SSMP7 – 44 thru 48	**REPLACE**	Page S7 – 44 thru 46 of Supplement G1, Section 7

INTENTIONALLY LEFT BLANK

18. ELECTRICAL SYSTEMS

Primary DC power is provided by two engine-driven alternators which, during normal operations, operate in parallel.

Each alternator is rated at 14,2-14,8 VDC, 70 Amp, and it is fitted with an external voltage regulator, which acts to maintain a constant output voltage, and with an automatic overvoltage device protecting the circuits and the electric components from an excessive voltage caused by alternator failures.

The power rating of the each alternator is such that if one alternator fails the other one can still supply the airplane equipment to maintain flight safety.

Secondary DC power is provided by a battery (lead type - Gill Teledyne G35, 12 V, 23-Ah in 1h run time) and an external DC power source can be connected to the aircraft DC distribution system.

On the instruments panel, right side, it is installed a voltmeter/ammeter. The ammeter section can indicate the current supplied by either left or right alternator switching a dedicated selector.

There are five different busses (make reference to Figure 11):

- Battery bus
- LH Alternator bus
- RH Alternator bus
- LH Avionic bus
- RH Avionic bus

The distribution system operates as a single bus with power being supplied by the battery and both alternator but it is possible to separate the left busses from the right busses when required by means of the Cross Bus switches.

All electrical loads are divided among the five busses on the basis of their importance and required power: equipment with duplicate functions are connected to separate busses.

The Battery bus, which supplies the most important loads, is energized from three sources: the battery and both alternator. This allows the bus for remaining active also in case of two independent faults in the supply paths.

The second ones allow, through a relay, for cutting off the power supply to the pertinent avionic bus.

When both generators are correctly operating and all above mentioned switches are in ON position, all the busses are connected to the generators.

The ignition switches, two for each engine and grouped on the over head panel, are instead independent from the airplane electrical system (generation and distribution); they only control and open the engine electrical circuit.

WARNING

If ignition switches are turned ON, a propeller movement can cause the engine starting with consequent hazard for people nearby.

18.1 MISSION POWER CONTROL

When the airplane embodies the design change "Power supply from built-in generators", the Rotax engine built-in generators are enabled in order to supply power to two available bus bars.

Each built-in generator is activated by means of a switch (LH and RH AUX FIELD) located on the LH breakers rack where are located also the breakers related to the auxiliary power generation system.

The light (switch built-in light) indicates that the electrical power is being generated.

The below figure presents the control panel for the built-in generators which in turn activate the converter box:

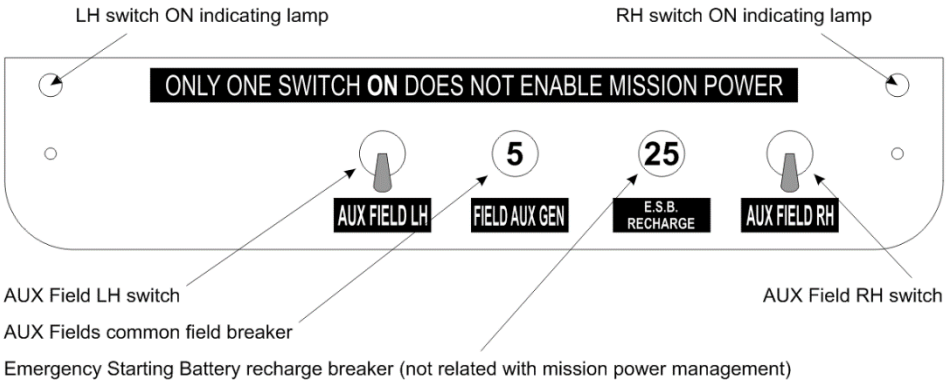

Switches panels

Next paragraph describes the converter and connector box installed in the P2006T baggage compartment floor. This box allows the operator to have a source of 28Volt/40Amp electrical power for different mission equipment.

18.1.1 CONVERTER BOX

The following points illustrate how the converter box works:

1. A closed, light alloy made box incorporates 4x converters Ameri-King AK-550-12, each one capable of 12Amp/28VDC output using a 14VDC input;
2. Each converter is fed by one different power generation:
   - 20Amp coming directly from the LH aux generator bus;
   - 20Amp coming directly from the RH aux generator bus;
   - 30Amp coming from the LH external alternator bus;
   - 30Amp coming from the RH external alternator bus;
3. Each converter is protected with circuit breakers on the INPUT and OUTPUT sides;
4. The 30Amp current coming from the LH and RH external alternators is the amount of power surplus available due to the 2006/202 design change;
5. The same switches shown in the MOD2006/046 and reported in the figure above enable the relays that feed the converters;
6. Four relays enable the external power to feed also the converter box for ground test purposes, when external socket is connected;
7. A connector box allows the end user to have a maximum current of 40Amp at 28VDC available (1120W).

NOTE

When using the ground power unit to test on-ground the mission equipment, remember that:

- *14VDC GPU only can be used, as done on standard P2006T.*
- *the minimum GPU capacity to properly feed mission equipment should be at least 150Amp @14VDC*
- *The FIELD AUX switches needs to be "ON" to test converter box connected equipment, "OFF" to test the aircraft avionics*

NOTE

When connecting mission equipment to the system please note tha the amount of current provided depends on engine rpm setting. The maximum electrical power is available from 1.900rpm on.

In the following figures the new Electrical system schematic is reported.

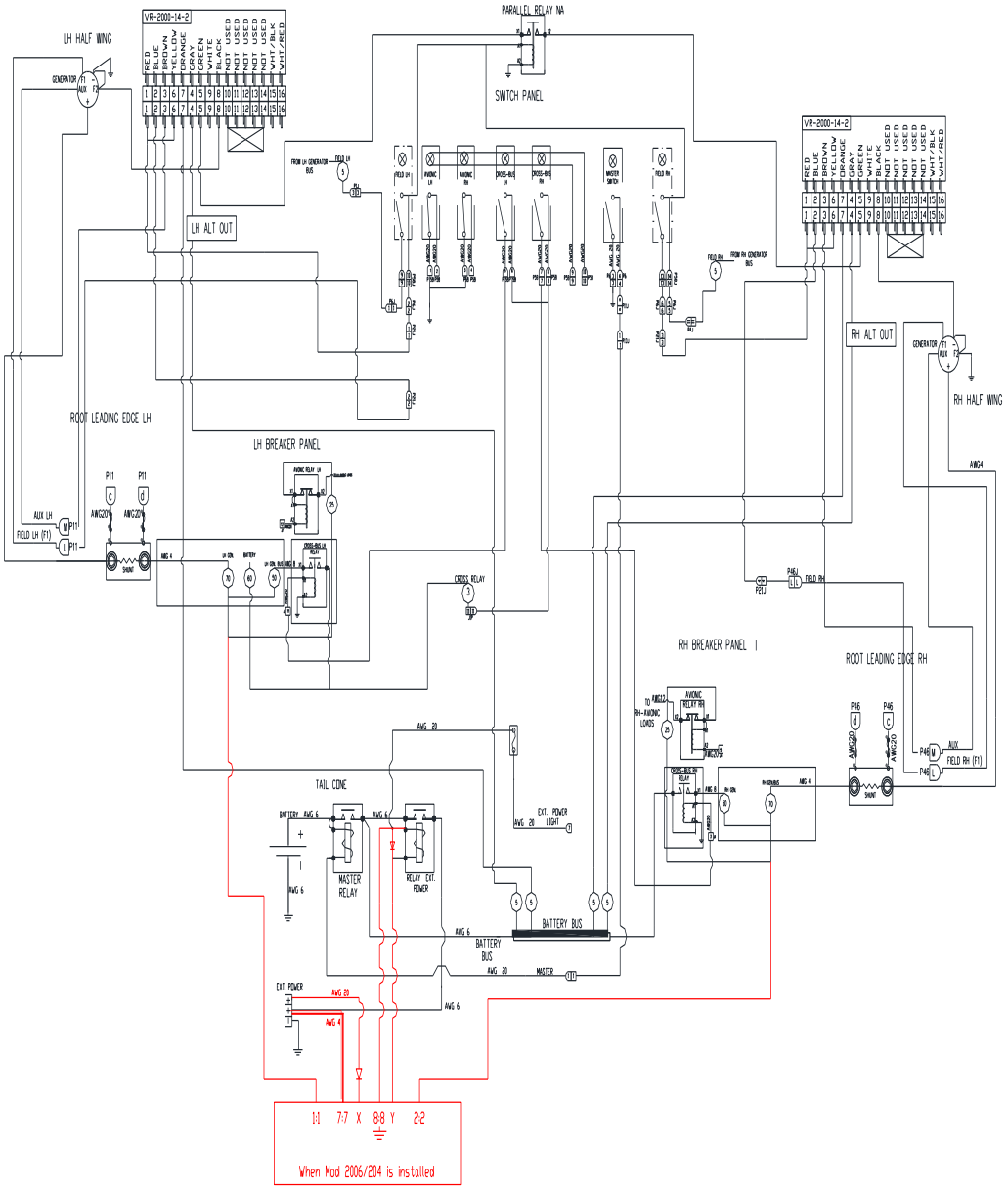

Electrical system schematic (Page 1)

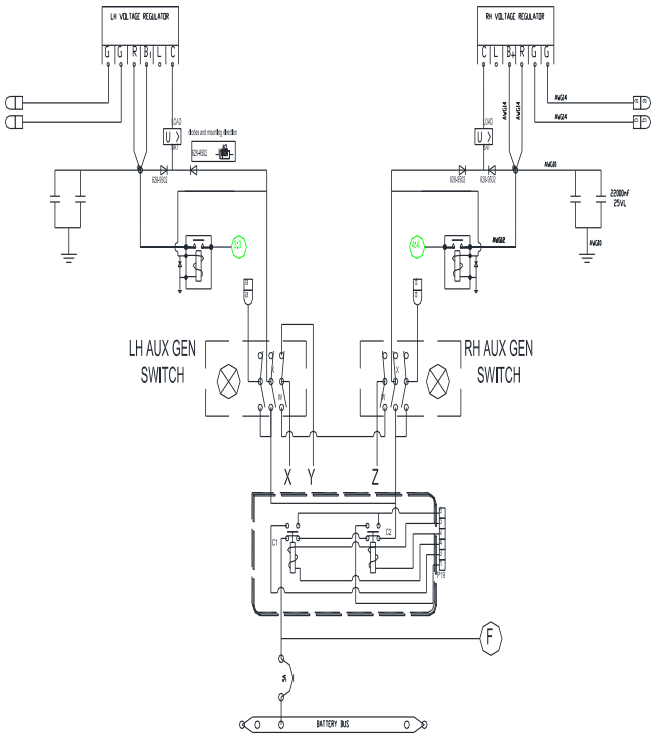

Figure 25 – Electrical system schematic (Page 2)

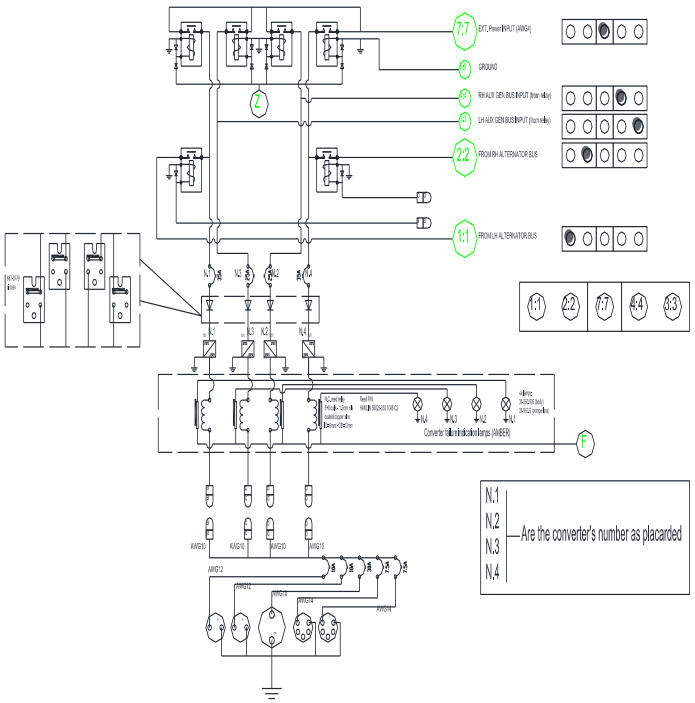

Electrical system schematic (Page 3)

INTENTIONALLY LEFT BLANK

Supplement G14: pages replacement instructions

SECTION 8 – GROUND HANDLING & SERVICE

Apply following instruction:

See Basic AFM - Section 8

INTENTIONALLY LEFT BLANK

SUPPLEMENT NO. G15
JAPANESE AFMS

Record of Revisions

Rev	Revised page	Description of Revision	Tecnam Approval			EASA Approval Or Under DOA Privileges
			DO	OoA	HDO	
0	--	First issue	D. Ronca	C. Caruso	M. Oliva	See Note (*)

Note (*): this Supplement has been originally issued after EASA Third Country Validation process.

LOEP

Page	Revision	Page	Revision
G15-1	Rev 0		
G15-2	Rev 0		
G15-3	Rev 0		
G15-4	Rev 0		
G15-5	Rev 0		
G15-6	Rev 0		
G15-7	Rev 0		
G15-8	Rev 0		

TABLE OF CONTENTS

INTRODUCTION 4
1. LIMITATION 5
1.1. Approved Fuel 5
2. Japanese Placards 6
2.1. Operating Limitations 6
2.2. Rear Seats 6
2.3. Other Placards 7

INTRODUCTION

This Supplement applies for Japanese registered aircraft.

It contains supplemental information to the basic information approved in EASA aircraft Flight Manual when the aircraft is registered in Japan.

This supplement is applicable to both P2006T digital and analogue configuration.

For Limitations, procedures, and performance information not contained in this supplement, refer to the basic Aircraft Flight Manual.

1. LIMITATION

1.1. Approved Fuel

- MOGAS ASTM D4814
- MOGAS EN 228 Super/Super plus (min. RON 95)
- AVGAS 100 LL (ASTM D910)

NOTE: For additional information, refer to Rotax Service Instruction No. 912-016, latest issue.

CAUTION

Prolonged use of Aviation Fuel Avgas 100LL results in greater wear of valve seats and greater combustion deposits inside cylinders due to higher lead content. It is therefore suggested to avoid using this type of fuel unless strictly necessary. Make reference to Rotax Maintenance Manual who provides dedicated checks due to the prolonged use of Avgas.

2. Japanese Placards

Hereinafter the placards, related to the operating limitations and installed on P2006T, are reported.

2.1. Operating Limitations

On the instrument panel, it is placed the following placard reminding the observance of aircraft operating limitations; make reference to Para. 22 for the list of equipment required on board to allow flight operations in VFR Day, VFR Night, IFR Day and IFR Night conditions.

運用限界
この航空機は飛行規程の運用限界に従い、N類の航空機として運用しなければならない。着氷気象状態での飛行及びスピンを含むすべての曲技飛行は禁止されている。
運用様式
有視界飛行方式（昼間、夜間）計器飛行方式（昼間、夜間）
※ 必要な装備品が装備されている場合に限る ※

2.2. Rear Seats

During Taxi, Take OFF, Landing (including Emergency Landing), both rear seats must be kept in the lowest and full aft position.

The following placard is located aside both rear seats.

Rear seats must be kept in lowest and full aft position during Taxi, Take Off, Landing and Emergency Landing

---

後部座席は、航空機が地上移動、離陸、着陸及び緊急着陸する際最も低位置かつ後方に移動させていなければならない。

2.3. Other Placards

Description	Placard (English and Japanese)	Place
Smoking ban.	NO SMOKING | 禁煙	Instruments panel, right side
Ditching emergency exit: opening instructions		Ditching emergency exit handle: internal side
Ditching emergency exit: opening instructions		Ditching emergency exit handle: external side
Door locking system: by-pass instructions		Main door and emergency exit: internal side
Door locking system: by-pass instructions		Main door and emergency exit: external side

Emergency exit label	EMERGENCY EXIT 非 常 口	Emergency exit: internal and external side
Main door: exit instructions	WARNING VERIFY PROPELLER STOPPED BEFORE OPENING DOOR EXIT TOWARDS FRONT OF AIRCRAFT 警 告 航空機の前方に出る際は、ドアを開ける前にプロペラが完全に停止していることを確認すること	Main door, internal side

SUPPLEMENT NO. G16 - MD302 ALTERNATIVE STAND-BY INSTRUMENT

RECORD OF REVISIONS

Rev	Revised page	Description of Revision	Tecnam Approval			EASA Approval Or Under DOA Privileges
			DO	OoA	HDO	
0	-	First issue	D. Ronca	C. Caruso	M. Oliva	EASA Approval No. 10058288
1	SMD4-15, SMD4-6	S4-15 replaced by S4-6	A. Sabino	C.Caruso	M. Oliva	DOA Privileges
	SMD2-12	Cancelled. Information integrated in basic AFM.				

LOEP

	Pages	Revision
Cover pages	G16–1 thru 10	*Rev. 1*
Section 3	SMD3 – 15 thru 16	*Rev. 0*
	SMD3 – 30	*Rev. 0*
Section 4	SMD4 – 6	*Rev. 1*
Section 7	MD7 – 29	*Rev. 0*
	SMD7 – 37	*Rev. 0*
	SMD7 – 39	*Rev. 0*

INTRODUCTION

This section contains supplemental information to operate, in a safe and efficient manner, the aircraft when equipped with Garmin G950 Integrated Flight Deck System (Design Change MOD 2006/002) and with MD302. The MD302 refers to the following design change:

- MOD2006/212 - MD302 Alternative Stand-By Instrument

The information contained herein supplements or supersedes the basic Aircraft Flight Manual or the Supplement G1, as applicable: detailed instructions are provided to allow the owner for replacing the Basic AFM/Supplement G1 pages containing information amended as per the Design Change in subject.

It is the owner's/operator's responsibility to replace the mentioned pages in the AFM in accordance with the instructions herein addressed section by section.

Supplement G16: pages replacement instructions

SECTION 1 – GENERAL

Apply following instruction:

See Basic AFM - Section 1

Supplement G16: pages replacement instructions

SECTION 2 – LIMITATIONS

Apply following instructions:

See Basic AFM - Section 2

Supplement G16: pages replacement instructions

SECTION 3 – EMERGENCY PROCEDURES

Apply following pages replacement procedure:

Supplement G16 - EMERGENCY PROCEDURES page		Supplement S1 Section 3 page
MD3 – 15 thru 16	**REPLACE**	Page S3–15 thru 16 of Supplement G1, Section 3
MD3 – 30	**REPLACES**	Page S3–30 of Supplement G1, Section 3

2.9 LOSS OF INFORMATION DISPLAYED

When a LRU or a LRU function fails, a large red 'X' is typically displayed on the display field associated with the failed data.

NOTE

In most of cases, the red "X" annunciation is accompanied by a message advisory alert issuing a flashing ADVISORY Softkey annunciation which, once selected, acknowledges the presence of the message advisory alert and displays the alert text message in the Alerts Window. Refer to G950 Pilot's Guide for Tecnam P2006T (P/N 190-01146-00), last issue, Appendix A, Message Advisories list.

2.10 LOSS OF AIRSPEED INFORMATION

	AIRSPEED FAIL **(RED X ON DISPLAY FIELD)**
	Display system is not receiving airspeed input from the Air Data Computer.

INSTRUCTION: revert to stand-by airspeed indicator

2.10 LOSS OF ATTITUDE INFORMATION

	ATTITUDE FAIL **(RED X ON DISPLAY FIELD)**
	Display system is not receiving attitude information from the AHRS**.**

INSTRUCTION: revert to stand-by attitude indicator

2.11 LOSS OF ALTITUDE INFORMATION

	ALTITUDE FAIL **(RED X ON DISPLAY FIELD)**
	Display system is not receiving altitude input from the Air Data Computer.

INSTRUCTION: revert to stand-by altitude indicator

5.3 MD 302 BATTERY FAILURE

WARNING

The MD302 internal battery will recharge itself from aircraft power while in normal mode. A battery capacity check occurs each time the unit is powered on. If the battery capacity is determined to be less than 80%, there will be a battery pack warning. If the warning persists more than once in a short time the battery must be replaced.

5.4 STATIC PORTS FAILURE

In case of static ports failure, the alternate static port in the cabin (shown below) must be activated.

1. Cabin ventilation *OFF (hot and cold air)*
2. ALTERNATE STATIC PORT VALVE *OPEN*
3. Continue the mission

Supplement G16: pages replacement instructions

SECTION 4 – NORMAL PROCEDURES

Apply following pages replacement procedure:

Supplement G16 - NORMAL PROCEDURES page		Supplement S1 Section 4 page
SMD4 – 6	**REPLACES**	Page S4–6 Supplement G01, Section 4

WARNING

The altitude calculated by G950 GPS receivers is geometric height above Mean Sea Level and could vary significantly from the altitude displayed by pressure altimeters, such as the GDC 74A Air Data Computer, or other altimeters in aircraft. GPS altitude should never be used for vertical navigation. Always use pressure altitude displayed by the G950 PFD or other pressure altimeters in aircraft.

NOTE

If the pilot profile is changed during the flight, the HSI could not indicate the correct LOC or VOR indication until the pilot manually tunes the active frequency. Make sure that the displayed indication on the HSI indicator is consistent with the selected frequency.

NOTE

The data contained in the terrain and obstacle databases comes from government agencies. Garmin accurately processes and cross-validates the data, but cannot guarantee the accuracy and completeness of the data. Reference "Garmin G950 Pilot's Guide for the Tecnam P2006T" (P/N 190-01146-XX), last issue, Appendix B concerning SD card use and databases.

NOTE

Use of polarized eyewear may cause the flight displays to appear dim or blank.

MD302 system use

WARNING

"The detailed description, operation and functionalities of MD302 Stand By Attitude Module are provided on MD302 Stand-By Attitude Module Pilot's Guide" document P/N 9017846 rev.D, which is to be considered to be attached to this AFM and kept onboard the aircraft.

Supplement G16: pages replacement instructions

SECTION 5 – PERFORMANCE

Apply following instruction:

See Basic AFM - Section 5

Supplement G16: pages replacement instructions

SECTION 6 – WEIGHT AND BALANCE

Apply following instruction:

See Basic AFM - Section 6

Supplement G16: pages replacement instructions

SECTION 7 – AIRFRAME AND SYSTEMS DESCRIPTION

Apply following pages replacement procedure:

Supplement G16 - AIRFRAME AND SYSTEM DESCRIPTION page		Basis AFM/Supplement S1 Section 7 page
MD7 – 29	**REPLACES**	Page 7 – 29 of Basic AFM, Section 7
SMD7 – 37	**REPLACES**	Page 7 – 37 of Supplement S1, Section 7
SMD7 – 39	**REPLACES**	Page 7 – 39 of Supplement S1, Section 7

16. MD302 ALTERNATIVE STAND-BY INSTRUMENT

In order to improve the digital version cockpit layout of the P2006T in terms of human-machine interface, weight saving and reliability this backup instrument V.1.0.5 is installed.

For more details refer to MOD2006/212.

WARNING

All MD302 Stand-by Attitude Module settings, set up during the aircraft delivery or after a maintenance activity, must not be modified.

WARNING

In case of replacement of MD302 Stand-by Attitude Module, verify proper software load and confirm that its software version number is compliance with that one showed above, before install it.

17. INSTRUMENTS PANEL

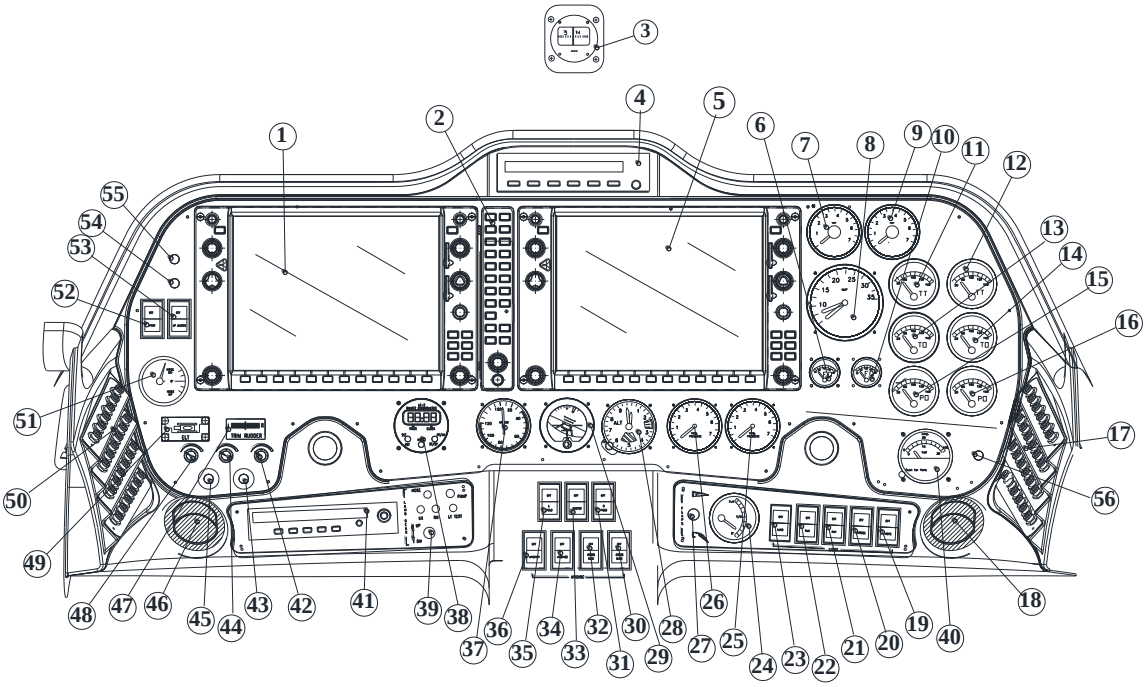

GARMIN G950 IFDS - Instruments panel (typical layout)

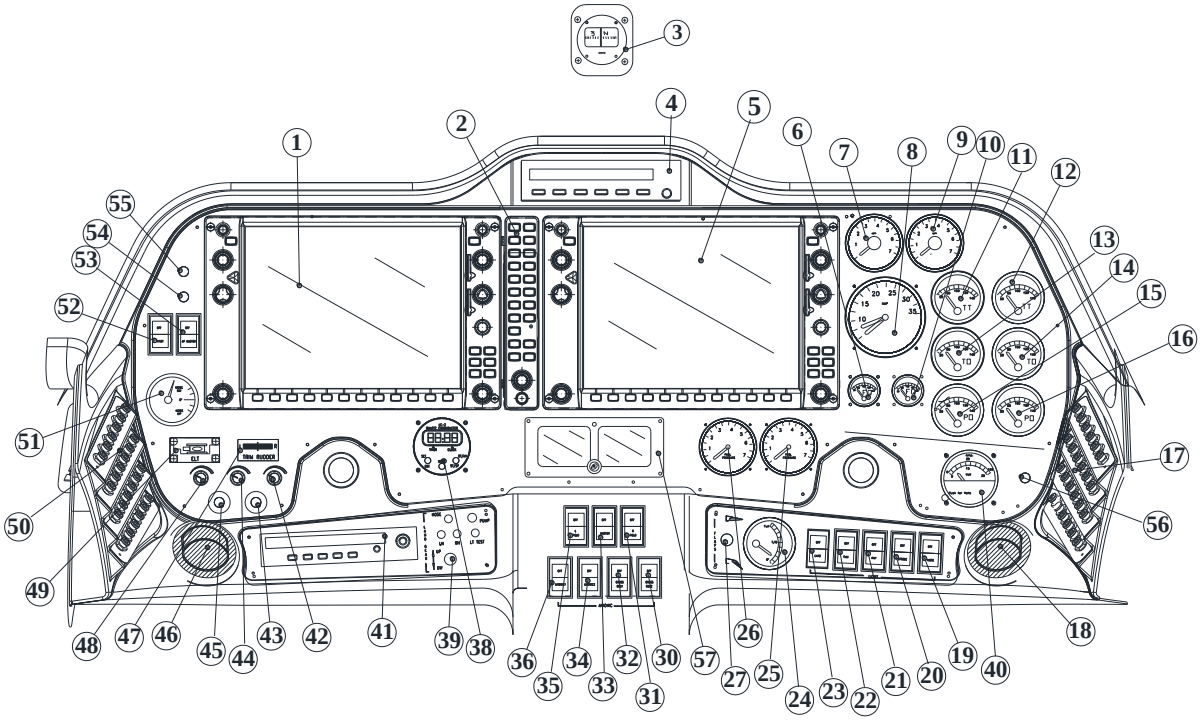

GARMIN G950 IFDS - Instruments panel - layout with MD302 digital stand-by instrument(MOD2006/212)

Item	Description
31	RH Field
32	LH Cross bus switch
33	Master switch
34	RH Avionic switch
35	LH Field
36	LH Avionic switch
37	Standby Airspeed indicator
38	Chronometer
39	LG control knob
40	Voltammeter Indicator
41	ADF control panel
42	Cockpit light dimmer
43	Cabin heat (warm air from RH engine)
44	Avionics lights dimmer
45	Cabin heat (warm air from LH engine)
46	LH ram air inlet
47	Trim rudder indicator
48	Switches built-in lights dimmer
49	ELT Indicator
50	RH breakers panel
51	Pitch trim indicator
52	Pitot heat switch
53	A/P Master switch
54	A/P trim master switch
55	Fire Detector push-to-test
56	LH/RH Ammeter selector switch
57	Mid-Continent MD302 Stand-By Instrument

Supplement G16: pages replacement instructions

SECTION 8 – GROUND HANDLING & SERVICE

Apply following instruction:

See Basic AFM - Section 8

INTENTIONALLY LEFT BLANK

SUPPLEMENT NO. G17 - STORMSCOPE

RECORD OF REVISIONS

Rev	Revised page	Description of Revision	Tecnam Approval			EASA Approval Or Under DOA Privileges
			DO	OoA	HDO	
0	-	First issue	D. Ronca	C. Caruso	M. Oliva	DOA Approval
1	all	Page replacement and equipment list suppressed	A. Sabino	C. Caruso	M. Oliva	DOA Approval

LOEP

	Pages	Revision
Cover pages	G17 – 1 thru 6	*Rev. 1*

INTRODUCTION

This supplement contains supplemental information to operate, in a safe and efficient manner, the aircraft when equipped with WX500 Stormscope; this equipment refers to the following design change:

- MOD2006/216 – Stormscope installation

The information contained herein supplements or supersedes the basic Aircraft Flight Manual or the Supplement G1, as applicable.

SECTION 1 – GENERAL

The following information supplements Section 1 of basic AFM and related supplements.

NOTE

The Stormscope does neither replace a weather radar nor weather information. The Stormscope is only used as an additional source of information beside approved weather information.

SECTION 2 – LIMITATIONS

See Section 2 of basic AFM and related supplements.

SECTION – EMERGENC PROCEDURES

See Section 3 of basic AFM and related supplements.

SECTION 4 – NORMAL PROCEDURES

See Section 4 of basic AFM and related supplements.

SECTION 5 – EMERGENC PROCEDURES

See Section 5 of basic AFM and related supplements.

SECTION 6 – WEIGHT AND BALANCE

See Section 6 of basic AFM and related supplements.

SECTION AIRFRAME AND S STEMS DESCRIPTION

The following information supplements Section 7 of basic AFM and related supplements.

WX500 STORMSCOPE SYSTEM

The thunderstorm detection passive sensor WX500 Stormscope is fully operated and displayed via the Garmin G950 Multi function display, in the map menu. Is is installed in order to shown the lightning data.

The sensor maps discharge the electrical activity for 360 degrees around the aircraft to a distance of 200 nautical miles, in relation to the aircraft's *Stormscope* antenna. The estimated distance from the aircraft to the discharge point is reported in NM while the bearing represents the angle between the fore and aft axis of the antenna, which is in line with the longitudinal axis (nose) of the aircraft.

The WX-500 processor is installed in the right side of the baggage compartment while the NY-163 antenna is installed on the bottom side of the tail.

For more details see WX-500 Installation Manual and the latest revision of the Garmin G950 Pilot's guide Doc. No.: 190-00726-00.

W D C

In the following figure the *Stormscope* wiring diagram is reported.

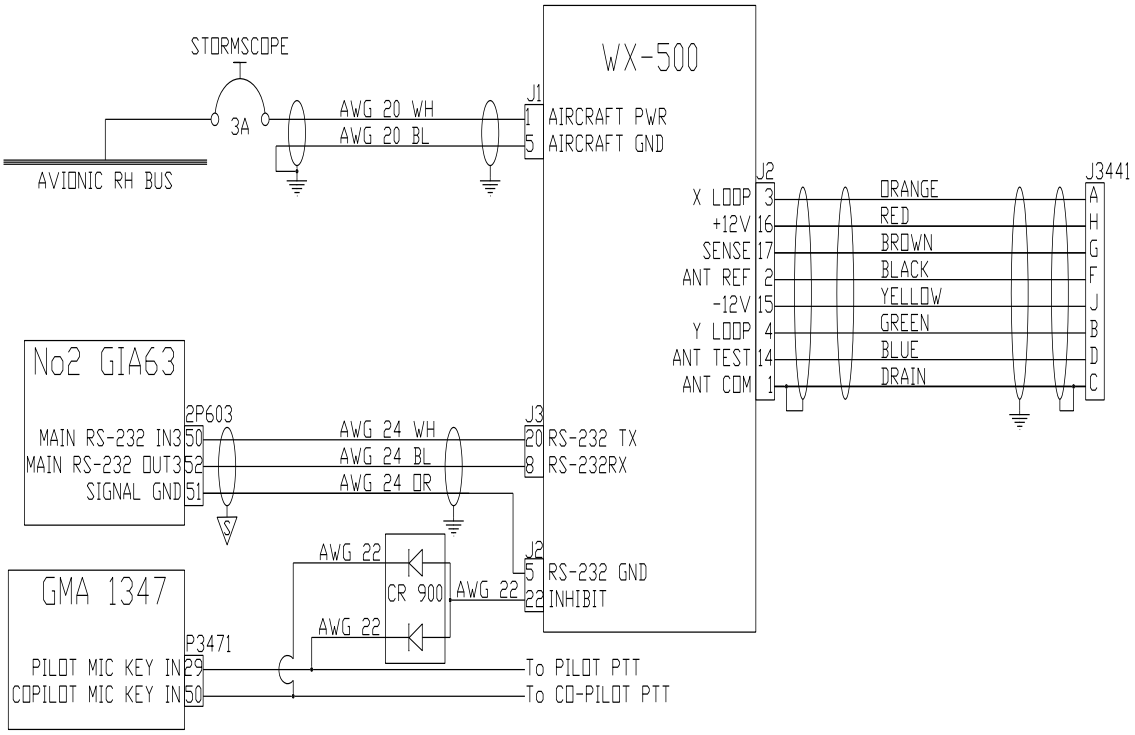

Wiring diagram

SECTION 8 – AIRCRAFT CARE AND MAINTENANCE

See Section 8 of basic AFM and related supplements.

INTENTIONALLY LEFT BLANK

SUPPLEMENT No. G19

G1000 NXi, Increased MTOW, Increased V_{LE}/V_{LO} and MD302

RECORD OF REVISIONS

Rev	Revised page	Description of Revision	Tecnam Approval			EASA Approval or Under DOA Privileges
			DO	OoA	HDO	
0	-	Initial issue	A. Sabino	C. Caruso	M. Oliva	EASA Approval N° 10062361
1	S2-6,8,12,16	Suppressed, information reported in basic AFM	A. Sabino	C. Caruso	M. Oliva	DOA Approval
	S4-24	Oil T indication for MOD2006/002				
2	S4-25 to 27	Normal procedures amended	A. Sabino	D. Ronca	M. Oliva	Approved under the authority of DOA, ref. EASA.21J.335 (MOD2006/345.181120)
3	S2-30, S7-40, 41	GIA and GMA update, electric loads arrangement updated	G. Valentino	D. Ronca	M. Oliva	Approved under the authority of DOA, ref. EASA.21J.335 (MOD2006/336.180703)
4	S3-1	Index updated	G. Valentino	D. Ronca	M. Oliva	Approved under the authority of DOA, ref. EASA.21J.335 (MOD2006/375.190826)
	S3-7 thru 9 S7-40, 41	Electrical loads distribution updated				
	S3-33	Electrical pitch trim control failure procedure added				
5	G19-1, 2, 7, 17	Update cover	G. Valentino	D. Ronca	M. Oliva	Approved under the authority of DOA, ref. EASA.21J.335 (MOD2006/382.200129)
	S2-12	Update powerplant limitations				
	S3-7,8,9 S3-42	Typo errors Note about landing gear CAS messages correct				
	S4-19,20	Update “Engine starting” checklist				
	S7-16, 37, 40, 41	Typo errors Added “Internal lights” page Correction of description about “Instrument light switch” Update list of breakers				

LOEP

	Pages	Revision
Cover pages	G19-1, 2, 7, 17	Rev 5
	3 thru 6, 8 thru 16, 18 thru 20	Rev 0
Section S2	5,7, 13 thru 16,21,22,29	Rev 0
	30	Rev 3
	12	Rev. 5
Section S3	2 thru 6, 10 thru 32, 34 thru 41, 43 thru 62	Rev 0
	1, 33	Rev 4
	7 thru 9, 42	Rev 5
Section S4	25 to 27	Rev 2
	24	Rev 1
	1 thru 18, 21 thru 23, 28 thru 38	Rev 0
	19, 20	Rev. 5
Section S5	1 thru 22	Rev 0
Section S7	1, 2, 29 thru 36, 38, 39, 42	Rev 0
	16, 37, 40, 41	Rev. 5

INTRODUCTION

This section contains supplemental information to operate, in a safe and efficient manner, the aircraft when equipped with the following design changes:

- Weight Increment (Design Change MOD2006/015)
- V_{LE} and V_{LO} Increment (Design Change MOD2006/033)
- MD302 Alternative Stand-By Instrument (Design Change MOD2006/212)
- Garmin G1000 NXi Avionic Suite (Design Change MOD2006/271).

The information herein contained supplements or supersedes the basic Aircraft Flight Manual: detailed instructions are provided to allow the owner for replacing the AFM pages containing information amended as per the Design Change in subject.

It is the owner's responsibility to replace the mentioned pages in the AFM in accordance with the instructions herein addressed section by section.

CAUTION

Garmin G1000 NXi Pilot's Guide for Tecnam P2006T (P/N 190-02286-00) – last issue – must be carried on board the airplane at all times.

CAUTION

MD302 Stand-By Attitude Module Pilot's Guide" document P/N 9017846 rev.D is to be considered to be attached to this AFM and kept onboard the aircraft.

INTENTIONALLY LEFT BLANK

Supplement G19: pages replacement instructions

SECTION 1 - GENERAL

See Basic AFM - Section 1

INTENTIONALLY LEFT BLANK

Supplement G19: pages replacement instructions

SECTION 2 - LIMITATIONS

Apply following pages replacement procedure:

Supplement G19 – LIMITATIONS page		Basic AFM Section 2 page
S2-5	**REPLACES**	2-5
S2-7	**REPLACES**	2-7
S2-12	**REPLACES**	2-12
S2-13	**REPLACES**	2-13
S2-14	**REPLACES**	2-14
S2-15	**REPLACES**	2-15
S2-21	**REPLACES**	2-21
S2-22	**REPLACES**	2-22
S2-29	**REPLACES**	2-29
S2-30	**REPLACES**	2-30

INTENTIONALLY LEFT BLANK

2. SPEED LIMITATIONS

The following table addresses the airspeed limitations and their operational significance:

SPEED			KIAS	KCAS	REMARKS
V_{NE}	Never exceed speed		171	172	Do not exceed this speed in any operation.
V_{NO}	Maximum Structural Cruising Speed		138	136	Do not exceed this speed except in smooth air, and only with caution.
V_A	Design Manoeuvring speed		122	119	Do not make full or abrupt control movement above this speed, because under certain conditions the aircraft may be overstressed by full control movement.
V_O	Operating Manoeuvring speed				
V_{LE}	Maximum Landing Gear extended speed		122	119	Do not exceed this speed with the landing gear extended.
V_{LO}	Maximum Landing Gear operating speed		122	119	Do not exceed this speed when operating the landing gear.
V_{FE}	Maximum flaps extended speed	***FULL***	93	93	Do not exceed this speed for indicated flaps setting.
		T.O.	122	119	
V_{MC}	Aircraft minimum control speed with one engine inoperative		62	62	Do not reduce speed below this value in event of one engine inoperative condition.

3. AIRSPEED INDICATOR MARKINGS

The Airspeed Indicator displays airspeed on a rolling number gauge using a moving tape.

The airspeed is displayed inside the black pointer. The pointer remains black until reaching never-exceed speed (V_{NE}), at which point it turns red.

Airspeed indicator markings and their colour code are explained in the following table.

MARKING	KIAS	EXPLANATION
White band	**54-93**	Lower limit is V_{SO}, upper limit is the maximum allowable speed with flaps extended in *FULL* position.
Red line	**62**	Minimum aircraft control speed with one engine inoperative and flaps set to T.O.
Green band	**66-138**	Normal aircraft operating range (lower limit is V_{S1}, stall speed in "clean" configuration, and upper limit is the maximum structural cruise speed V_{NO}).
Blue line	**84**	Best rate-of-climb speed with one engine inoperative.
Yellow band	**138-171**	Speed range where manoeuvres must be conducted with caution and only in smooth air.
Red line	**171**	Maximum speed for all operations.

11. POWERPLANT INSTRUMENTS MARKINGS

Powerplant instrument markings and their colour code significance are shown below:

INSTRUMENT		RED LINE/ARC Minimum limit	WHITE LINE/ARC Advisory	GREEN LINE/ARC Normal operating	YELLOW ARC Caution	RED LINE/ARC Maximum limit
Propeller	RPM	/	0-577	577 - 2265	2265 - 2388	2388-2500
MAP	inHG	/	0-35	/	/	/
Oil temp.	°C	50	/	90-110	50-90 110-130	130
			0-50	50 – 130(1)	/(2)	130-135
CT	°C	50	0-50	50 – 120	/	120-125
CHT(3)	°C	/	50-135	/	/	135
Oil pressure	bar	0.8	/	2 - 5	0.8 - 2 5 - 7 (4)	7
Fuel press.	psi	2.2	0-2.1	2.2 – 5.8 or 7.2(5)	/	5.8
						7.2(3)- 8
Fuel Q.ty	litres	0(6)-10	/	10-97	/	/

12. OTHER INSTRUMENTS MARKINGS

INSTRUMENT		RED LINE/ARC Minimum limit	WHITE LINE/ARC Advisory	GREEN LINE/ARC Normal operating	YELLOW ARC Caution	RED LINE/ARC Maximum limit
Voltmeter	Volt	10-10,5	/	12 - 16	/	16-16.5
Ammeter	Amp	/	/	0-40	/	41-50
Ammeter[7]	Amp	/	/	0-70	/	71-80

If MOD2006/212 is embodied, markings are unchanged so refer to the basic AFM for information.

1 Applicable for aircraft with MOD2012/280 embodied

2 Applicable for aircraft with MOD2012/280 embodied.

3 Applicable for Engines up to serial no. 4924543(included) and repaired engine which doesn't change the cylinder head n°3 with new one (part no. 413195).

4 In event of cold starting operation, it is permitted a maximum oil pressure of 7 bar for a short period.

5 Only applicable for fuel pump part n. 893110 or 893114.

6 "0" indication shows the unusable fuel quantity (2,8 litres for each fuel tank).

7 Applicable for aircraft embodying MOD2012/202.

13. WARNINGS, CAUTIONS AND ADVISORIES LIGHTS

Following table addresses the warning and caution alerts and safe operating annunciations shown (unless differently specified) on the Annunciation Window:

Warning alert (RED)	Cause
L BUS VOLT HIGH	LH electric system overvoltage
R BUS VOLT HIGH	RH electric system overvoltage
L COOLANT LOW	Left engine - coolant liquid low level
L COOLANT LOW	Right engine - coolant liquid low level
PILOT DR OPEN	Main door open and/or unlocked
REAR DR OPEN	Rear door open and/or unlocked
LH ENGINE FIRE	Left engine compartment: fire detected
RH ENGINE FIRE	Right engine compartment: fire detected
LG TRANSITION	One or more legs are in transition phase and/or the selected retracted/extended position is not yet reached
Caution alert (AMBER)	**Cause**
L ALT FAIL	LH generator failure
R ALT FAIL	RH generator failure
PITOT HEAT	Pitot heating system failure/not activated
EXT POWER ON	External electrical supply connected
GEAR PUMP ON	LG pump electrically supplied
Safe operating annunciation (GREEN)	**Indication**
L FUEL PUMP ON	Left engine - electrical fuel pump ON
R FUEL PUMP ON	Right engine - electrical fuel pump ON
PITOT HEAT ON	Pitot heating system ON
LG Down & Locked	Landing gear extended and locked

Aural means are provided by Garmin G1000 NXi: a repeating tone is associated to the warning alerts and a single chime is associated to the caution alerts. Safe operating annunciations do not have any aural chime generated.

Make reference to Garmin G1000 NXi Pilot's Guide for P2006T (P/N 190-02286-00), last issue.

14 WEIGHTS

Condition	Weight	
Maximum takeoff weight	1230 kg	2712 lb
Maximum landing weight	1230 kg	2712 lb
Maximum zero wing fuel weight	1195 kg	2635 lb

NOTE *Refer to Para. 21.4 of this AFM Section for baggage loading limitations.*

21. LIMITATIONS PLACARDS

Hereinafter the placards, related to the operating limitations and installed on ***P2006T***, are reported.

21.1. SPEED LIMITATIONS

On the left side instrument panel, the following placards reporting the speed limitations are placed:

Operating Manoeuvring speed
V_O = 122KIAS

Maximum L.G. op. speed
V_{LO} / V_{LE} = 122KIAS

21.2. OPERATING LIMITATIONS

On the instrument panel, it is placed the following placard reminding the observance of aircraft operating limitations; make reference to Para. 22 for the list of equipment required on board to allow flight operations in VFR Day, VFR Night, IFR Day and IFR Night conditions.

This A/C can be operated only in normal category DAY-NIGHT-VFR-IFR (with required equipment) in non-icing conditions. All aerobatics manoeuvres including spinning are prohibited. For operational limitations refer to FLIGHT MANUAL

22. KINDS OF OPERATIONS EQUIPMENT LIST

This paragraph reports the KOEL table, concerning the equipment list required on board under CS-23 regulations to allow flight operations in VFR Day, VFR Night, IFR Day and IFR Night conditions.

Flight in VFR Day and Night, IFR Day and Night is permitted only if the prescribed equipment is installed and operational.

Additional equipment, or a different equipment list, for the intended operation may be required by national operational requirements and also depends on the route to be flown.

Equipment	VFR Day	VFR Night	IFR Day	IFR Night
Magnetic compass	●	●	●	●
GDU 1050 - Display Unit (2)	●	●	●	●
GIA 63W/64W - Integrated Avionics Unit (2)	●	●	●	●
GDC 72 - Air Data Computer	●	●	●	●
GTP 59 - OAT sensor	●	●	●	●
GRS 79 - AHRS	●	●	●	●
GMU 44 - Magnetometer	●	●	●	●
GMA 1347/1360 - Audio panel / MKR Receiver	●	●	●	●
GTX 345R - Transponder	●	●	●	●
MD-302 - Standby Attitude Module	●	●	●	●
Pitot heating system	●	●	●	●
Breakers panels	●	●	●	●
First Aid kit	●	●	●	●
Fire extinguisher	●	●	●	●
Fire detectors (2)	●	●	●	●
Position lights	●	●	●	●
Landing light	●	●	●	●
Taxi light	●	●	●	●
Strobe lights	●	●	●	●
Torch		●	●	●
Cabin light		●	●	●
Panel lights		●	●	●
Map lights		●	●	●
Cockpit lights		●	●	●
Emergency light	●	●	●	●
Volt-Ammeter	●	●	●	●
ELT	●	●	●	●
Alternate static source	●	●	●	●
Stall warning system	●	●	●	●
KN63 - DME			●	●
	VFR Day	VFR Night	IFR Day	IFR Night

Supplement G19: pages replacement instructions

SECTION 3 - EMERGENCY PROCEDURES

Supplement G19 Section 3 – EMERGENCY PROCEDURES
replaces Basic AFM Section 3 as a whole

INTENTIONALLY LEFT IN BLANK

SECTION 3 – EMERGENCY PROCEDURES

INDEX

1. INTRODUCTION 3
1.1. Engine failure during takeoff run 3

2. AIRPLANE ALERTS 6
2.1 Single alternator failure / overvoltage 7
2.2 Both alternators failure 8
2.3 Both alternators overvoltage 9
2.4 Failed door closure 10
2.5 Pitot heating system failure 11
2.6 Coolant liquid low level 12
2.7 Gear Pump failure 13
2.8 Engine fire 14
2.9 Loss of information displayed 15
2.10 Loss of airspeed information 15
2.10 Loss of attitude information 16
2.11 Loss of altitude information 16
2.12 Loss of vertical speed information 17
2.13 Loss of heading information 17
2.14 Display failure 19

3. ENGINE SECURING 21

4. POWERPLANT EMERGENCIES 23
4.1 Propeller overspeeding 23
4.2 CHT limit exceedance 24
4.3 Oil temperature limit exceedance 25
4.4 Oil pressure limits exceedance 26
4.5 Low fuel pressure 27

5. OTHER EMERGENCIES 29
5.1 Emergency descent 29
5.2 Total electrical failure 29
5.3 Static ports failure 30
5.4 Unintentional flight into icing conditions 31
5.5 Carburettor icing 32
5.6 Flaps control failure 33
5.7 Electrical pitch trim control failure 33

6 ONE ENGINE INOPERATIVE PROCEDURES 34
6.1 Characteristic airspeeds with one engine inoperative 35
6.2 Inflight engine restart 36
6.3 Engine failure during takeoff run 37
6.4 Engine failure during climb 39
6.5 Engine failure in flight 40

6.6 One engine inoperative landing 41

7 LANDING GEAR SYSTEM FAILURES 42
7.1 Emergency landing gear extension 42
7.2 Complete Gear up or nose gear up landing 43
7.3 Partial Main LG extension 45
7.4 Failed retraction 47
7.5 Unintentional landing gear extension 47

8 SMOKE AND FIRE OCCURRENCE 49
8.1 Engine fire on the ground 49
8.2 Engine fire during takeoff run 50
8.3 Engine fire in flight 52
8.4 Electrical smoke in cabin on the ground 52
8.5 Electrical smoke in cabin during flight 53

9 UNINTENTIONAL SPIN RECOVERY 55

10 LANDING EMERGENCIES 56
10.1 Landing without engine power 56
10.2 Landing with Nose landing gear tire deflated 58
10.3 Landing with a known main landing gear tire deflated 59
10.4 Landing without brakes 60

11 AIRCRAFT EVACUATION 61

12 DITCHING 62

1. INTRODUCTION

Section 3 includes checklists and detailed procedures for coping with various types of emergency conditions that could arise after a system failure.

Before operating the aircraft, the pilot should become thoroughly familiar with this manual and, in particular, with this Section. Further on a continued and appropriate training and self study should be done.

Two types of emergency procedures are hereby given.

a. "BOLD FACES" which must be known by heart by the pilot and executed, in the correct and complete sequence, immediately after the failure is detected and confirmed.
These procedures characters are boxed and highlighted:

1.1. ENGINE FAILURE DURING TAKEOFF RUN

BEFORE ROTATION: ABORT TAKE OFF

1.	**Throttle Lever**	***BOTH IDLE***
2.	**Rudder**	***Keep heading control***
3.	- -	
4.	- -	

b. "other procedures" which should be well theoretically known and mastered, but that can be executed entering and following step by step the AFM current section appropriate checklist.

Additionally operating the aircraft, the pilot should become thoroughly familiar with the Garmin G1000 NXI Pilot's Guide for Tecnam P2006T(P/N 190-02286-00) – last issue - and, in particular, with the present AFM Section.

CAUTION

Garmin G1000 NXI Pilot's Guide for Tecnam P2006T (P/N 190-02286-00) – last issue - must be carried onboard the airplane at all times.

WARNING

Garmin G1000 NXI has a very high degree of functional integrity. However, the pilot must recognize that providing monitoring and/or self-test capability for all conceivable system failures is not practical. Although unlikely, it may be possible for erroneous operation to occur without a fault indication shown by the G1000 NXI. It is thus the responsibility of the pilot to detect such an occurrence by means of crosschecking with all redundant or correlated information available in the cockpit.

In any case, as a failure or abnormal behaviour is detected pilots should act as follows:

1. *Keep self-control and maintain aircraft flight attitude and parameters*
2. *Analyse the situation identifying, if required, the area for a possible emergency landing*
3. *Apply the pertinent procedure*
4. *Inform the Air Traffic Control as applicable*

NOTE

For the safe conduct of later flights, any anomaly and/or failure must be communicated to the National Authorities in charge, in order to put the aircraft in a fully operational and safe condition.

NOTE

In this Chapter, following definitions apply:
***Land as soon as possible**: land without delay at the nearest suitable area at which a safe approach and landing is assured.*
***Land as soon as practical**: land at the nearest approved landing area where suitable repairs can be made.*

INTENTIONALLY LEFT BLANK

2. AIRPLANE ALERTS

Annunciation Window, located to the right of the Altimeter and Vertical Speed Indicator, supplies 16 alerts for warnings and cautions along with safe operating annunciations. The colours are as follows:

GREEN: to indicate that pertinent device is turned ON
AMBER: to indicate no-hazard situations which have to be considered and which require a proper crew action
RED: to indicate emergency conditions

Warning alert text is shown in red in the Annunciation Window and is accompanied by a continuous chime and a flashing WARNING Softkey annunciation. Selecting the WARNING Softkey acknowledges the presence of the warning alert and stops the aural chime.

Caution alert text is shown in yellow in the Annunciation Window and is accompanied by a single chime and a flashing CAUTION Softkey annunciation. Selecting the CAUTION Softkey acknowledges the presence of the caution alert. Caution voice alerts repeat three times or until acknowledged by selecting the CAUTION Softkey.

All aircraft annunciations can be displayed simultaneously in the Annunciation Window. A white horizontal line separates annunciations that are acknowledged from annunciations that are not yet acknowledged. Higher priority annunciations are displayed towards the top of the window.

In order to give a short description about the airplane alerts, text messages are displayed on the Alerts Window: pressing the ALERTS Softkey displays the Alerts Window, pressing the ALERTS Softkey a second time removes the Alerts Window from the display. When the Alerts Window is displayed, the FMS knob can be used to scroll through the alert message list.

21 SINGLE ALTERNATOR FAILURE / OVERVOLTAGE

Annunciation window	Alert window
L ALT FAIL	Lh Alternator

OR

R ALT FAIL	Rh Alternator

1. FIELD LH (or RH) *OFF*
2. FIELD LH (or RH) *ON*

If the LH (or RH) ALT caution stays displayed

3. FIELD LH (or RH) *OFF*
4. Avionic LH *OFF*
5. ADF (if installed) *OFF*

NOTE *Switching OFF avionic LH and ADF (if installed) will permit to shed non-essential electrical power.*
The battery and a single generator are able to supply the electrical power necessary for flight, but redundancy is lost.

If conditions permit:

NOTE *Switching CROSS BUS OFF will further reduce alternator load; the decision mainly depends on weather conditions.*

6. CROSS BUS LH (or RH) OFF

Equipment will be lost accordingly to the following table:

LH Gen Bus	LH Avionic Bus	RH Avionic Bus	RH Gen Bus
Taxi Light	Trim A/P	COM 2	Rudder Trim
Pitot Heat	A/P	M.F.D.	Co-pilot seat
Voltage regulator	XPDR	A.D.F. (if installed)	Voltage regulator RH
Cabin fan	D.M.E.	GPS/NAV 2	Nav Light
	Turn coord	Converter 12/28	Audio panel
	TCAS (if installed)	12V socket	Avionic Fan

7. Land as soon as practicable

2.2 BOTH ALTERNATORS FAILURE

Annunciation window	Alert window
L ALT FAIL	Lh Alternator
R ALT FAIL	Rh Alternator

In event of both L and R ALT FAIL caution alerts displayed:

1. FIELD LH and RH *BOTH OFF*
2. FIELD LH and RH *BOTH ON*

If the LH (or RH) ALT caution stays displayed

1. Verify good ammeter indications on restored alternator
2. Refer to Single alternator failure / overvoltage drill (Para 2.1)

If both LH and RH ALT cautions stay displayed

3. FIELD LH and RH *BOTH OFF*
4. CROSS BUS LH and RH *BOTH OFF*

If engine starting battery modification is applied

5. EMERG BATT switch ON
6. **Land as soon as possible.**

If engine starting battery modification is not applied

5. **Land as soon as possible.**

Equipment will be lost accordingly to the following table:

LH Gen Bus	LH Avionic Bus	RH Avionic Bus	RH Gen Bus
Taxi Light	Trim A/P	COM 2	Rudder Trim
Pitot Heat	A/P	M.F.D.	Co-pilot seat
Voltage regulator	XPDR	A.D.F. (if installed)	Voltage regulator RH
Cabin fan	D.M.E.	GPS/NAV 2	Nav Light
	Turn coord	Converter 12/28	Audio panel
	TCAS (if installed)	12V socket	Avionic Fan

NOTE *The battery can supply electrical power for at least 30 minutes.*

2.3 BOTH ALTERNATORS OVERVOLTAGE

Annunciation window	Alert window
L BUS VOLT HIGH	Lh overvoltage
R BUS VOLT HIGH	Rh overvoltage

In event of both L and R BUS VOLT HIGH warning alerts displayed:

1. FIELD LH and RH *BOTH OFF*
2. FIELD LH and RH *BOTH ON (one at a time)*

If the LH (or RH) BUS VOLT HIGH warning is still displayed

3. Verify good ammeter indications on restored alternator
4. Refer to Single alternator failure / overvoltage drill (Para 2.1)

If both LH and RH BUS VOLT HIGH warning are still displayed

3. CROSS BUS LH and RH BOTH OFF
4. FIELD LH and RH BOTH OFF
5. FIELD LH and RH BOTH ON (one at a time)

If LH (or RH) BUS VOLT HIGH warning is still displayed

6. Verify good ammeter indications on restored alternator
7. Switch CROSS BUS on the restored alternator side
8. Refer to Single alternator failure / overvoltage drill (Para 2.1)

If both LH and RH BUS VOLT HIGH warning are still displayed

6. FIELD LH and RH *BOTH OFF*

If engine starting battery modification is applied

7. EMERG BATT switch ON
8. **Land as soon as possible.**

If engine starting battery modification is not applied

7. **Land as soon as possible**

Equipment will be lost accordingly to the following table:

LH Gen Bus	LH Avionic Bus	RH Avionic Bus	RH Gen Bus
Taxi Light	Trim A/P	COM 2	Rudder Trim
Pitot Heat	A/P	M.F.D.	Co-pilot seat
Voltage regulator	XPDR	A.D.F. (if installed)	Voltage regulator RH
Cabin fan	D.M.E.	GPS/NAV 2	Nav Light
	Turn coord	Converter 12/28	Audio panel
	TCAS (if installed)	12V socket	Avionic Fan

NOTE *The battery can supply electrical power for at least 30 minutes.*

2.4 FAILED DOOR CLOSURE

Annunciation window	Alert window
PILOT DR OPEN	Main door open

OR

REAR DR OPEN	Rear door open

In case of door opening / unlocking, related PILOT or REAR DR OPEN alert is displayed. In this case, apply following procedure:

ON THE GROUND

1. Passengers and crew seat belts *Fasten and tighten*
2. Affected door *Verify correctly closed*

If door is open

3. Relevant engine *Shut down*
4. Affected door *Close and check*

If door is closed

3. Locking device *Check*

If down in unlocked position

4. Abort mission.

IN FLIGHT

1. Passengers and crew seat belts *Fasten and tighten*
2. Affected door and locked device *Verify correctly closed*

If door is open or locking device is unlocked

3. **Land as soon as possible**

2.5 PITOT HEATING SYSTEM FAILURE

Annunciation window	Alert window
PITOT HEAT ON	Pitot heat
PITOT HEAT	Pitot heat

When the Pitot Heating system is activated, the green PITOT HEAT advisory light is turned ON.
If the amber PITOT HEAT caution light turns OFF, then the Pitot Heating system is functioning properly. Anytime the amber PITOT HEAT caution light is ON at the same time the green PITOT HEAT light is ON, then the Pitot Heating system is not functioning properly.

1. Pitot heat switch *OFF*
2. Verify Pitot Heating circuit breaker is IN
3. Pitot heat switch *ON*
4. Check PITOT HEAT caution light:

   If the amber light stays ON, assume a failure in the pitot heating system.
   Avoid visible moisture and OATs below 10 deg C.

2.6 COOLANT LIQUID LOW LEVEL

Annunciation window	Alert window
L COOLANT LOW	Lh Low Coolant

OR

R COOLANT LOW	Rh Low Coolant

When the engine coolant liquid level goes under the lower limit, the related L or R COOLANT LOW warning alert is displayed. Low coolant level condition may lead to high CHT/CT. When the warning is displayed, apply following procedure:

1. Check affected engine CHT/CT

If CHT is above 135°C or CT is above 120°C

2. Affected engine *Reduce power setting to reduce CHT/CT up to the minimum practical*
3. **Land as soon as practical**

If CH/CT continues to rise and engine shows roughness or power loss

4. Affected engine *SECURE (securing procedure on Para. 4)*
5. **Land as soon as possible** applying *one engine inoperative landing* procedure. See Para. 6.6

2.7 GEAR PUMP FAILURE

Annunciation window	Alert window
GEAR PUMP ON	Gear powered

The GEAR PUMP ON caution light turns ON when the landing gear hydraulic pump is electrically supplied.

After the landing gear retraction, if the red TRANS light turns OFF and the GEAR PUMP ON caution stays turned ON, this could indicate a gear pump relay failure to ON.

If TRANS light is OFF

1. Continue the mission monitoring the caution light.

If TRANS light is ON

2. Landing gear is not locked in UP position

NOTE

The electrical gear pump, continuously supplied, causes a current absorption which does not affect the mission unless this failure is coupled with the overall electrical failure. In this case, the residual battery endurance may be consistently lower than 30 minutes.

2.8 ENGINE FIRE

Annunciation window	Alert window
LH ENGINE FIRE	Left engine fire detected
RH ENGINE FIRE	
OR	Right engine fire detected

In event of engine fire, the LH or RH ENGINE FIRE warning alert is displayed.
Refer to following procedures:

FIRE ON THE GROUND: see Para. 8.1
FIRE DURING TAKEOFF RUN: see Para. 8.2
FIRE IN FLIGHT: see Para. 8.3

2.9 LOSS OF INFORMATION DISPLAYED

When a LRU or a LRU function fails, a large red 'X' is typically displayed on the display field associated with the failed data.

NOTE

In most of cases, the red "X" annunciation is accompanied by a message advisory alert issuing a flashing ADVISORY Softkey annunciation which, once selected, acknowledges the presence of the message advisory alert and displays the alert text message in the Alerts Window. Refer to G1000 NXI Pilot's Guide for Tecnam P2006T (P/N 190-02286-00), last issue, Appendix A, Message Advisories list.

2.10 LOSS OF AIRSPEED INFORMATION

	AIRSPEED FAIL **(RED X ON DISPLAY FIELD)**
	Display system is not receiving airspeed input from the Air Data Computer.

INSTRUCTION: revert to standby airspeed indicator

2.11 LOSS OF ATTITUDE INFORMATION

	ATTITUDE FAIL **(RED X ON DISPLAY FIELD)**
	Display system is not receiving attitude information from the AHRS.

INSTRUCTION: revert to standby attitude indicator

2.12 LOSS OF ALTITUDE INFORMATION

	ALTITUDE FAIL **(RED X ON DISPLAY FIELD)**
	Display system is not receiving altitude input from the Air Data Computer.

INSTRUCTION: revert to standby altitude indicator

2.13 LOSS OF VERTICAL SPEED INFORMATION

	VERT SPEED FAIL **(RED X ON DISPLAY FIELD)**
	Display system is not receiving vertical speed input from the Air Data Computer.

INSTRUCTION: determine vertical speed on the basis of altitude information

2.14 LOSS OF HEADING INFORMATION

	HDG **(RED X ON DISPLAY FIELD)**
	Display system is not receiving valid heading input from AHRS.

INSTRUCTION: revert to magnetic compass

INTENTIONALLY LEFT BLANK

2.15 DISPLAY FAILURE

In the event of a display failure, the G1000 NXi System automatically switches to reversionary (backup) mode. In reversionary mode, all important flight information is presented on the remaining display in the same format as in normal operating mode. The change to backup paths is completely automated for all LRUs and no pilot action is required.

if the system fails to detect a display problem

1. DISPLAY BACKUP button *PUSH*

CAUTION

If a display fails, the related Integrated Avionics Unit (IAU) is cut off and can no longer communicate with the remaining display: consequently the NAV and COM functions provided to the failed display by the Integrated Avionics Unit are flagged as invalid on the remaining display.

INTENTIONALLY LEFT BLANK

3. ENGINE SECURING

Following procedure is applicable to shut-down one engine in flight:

1.	**Throttle Lever**	***IDLE***
2.	**Ignition**	***BOTH***
3.	**Propeller Lever**	***OFF***
4.	**Fuel Selector**	***FEATHER***
5.	**Electrical fuel pump**	***OFF***

After securing engine(s), after analysing situation, refer immediately to following procedures:

ENGINE FAILURE IN FLIGHT:	see Para. 6.5
SINGLE GENERATOR FAILURE:	see Para. 2.1
or BOTH GENERATOR FAILURE:	see Para. 2.2
INFLIGHT ENGINE RESTART:	see Para. 6.2
ONE ENGINE INOPERATIVE LANDING:	see Para. 6.6
or LANDING WITHOUT ENGINE POWER:	see Para. 10.1

INTENTIONALLY LEFT BLANK

4. POWERPLANT EMERGENCIES

4.1 PROPELLER OVERSPEEDING

The aircraft is fitted with propeller/governor set by MT-Propeller such a way that the maximum propeller rpm exceedance is prevented. In case of propeller over-speeding in flight, apply following procedure:

1.	Throttle Lever	*REDUCE power to minimum practical*
2.	Propeller Lever	*REDUCE as practical (not in feathering)*
3.	RPM indicator	*CHECK*

If it is not possible to decrease propeller rpm, apply *engine securing procedure* (see Para. 3) and **land as soon as possible** applying *one engine inoperative landing* procedure (See Para. 6.6).

CAUTION

Maximum propeller rpm exceedance may cause the engine components damage. Propeller and engine shall be inspected in accordance with related Operators Manuals.

4.2 CHT LIMIT EXCEEDANCE

If CHT/CT exceeds its limit, apply following procedure:

1. Check affected engine CHT/CT

<u>If CHT is above 135°C or CT is above 120°C</u>

2. Affected engine — *Reduce power setting to reduce CHT/CT up to the minimum practical*
3. **Land as soon as practical**

<u>If CHT/CT continues to rise and engine shows roughness or power loss</u>

4. Affected engine — *SECURE (securing procedure on Para. 3)*
5. **Land as soon as possible** applying *one engine inoperative landing* procedure. See Para. 6.6

4.3 OIL TEMPERATURE LIMIT EXCEEDANCE

If oil temperature exceeds maximum limit (130°C):

1. OIL PRESS *CHECK*

If oil pressure is within limits

2. Affected engine *Reduce power setting to minimum applicable*
3. Affected engine *Keep propeller speed higher than 2000 RPM*

If oil pressure does not decrease

4. Airspeed *INCREASE*

NOTE

If oil temperature does not come back within limits, the thermostatic valve, regulating the oil flow to the heat exchangers, could be damaged or an oil leakage can be present in the oil supply line.

5. **Land as soon as practical** keeping the affected engine to the minimum necessary power
6. Monitor OIL PRESS and CHT/CT

if engine roughness / vibrations or erratic behaviour is detected:

7. Affected engine *SECURE (engine securing procedure on Para. 3)*
8. **Land as soon as possible** applying *one engine inoperative landing* procedure. See Para. 6.6

WARNING

Excessive oil pressure drop leads to a high pitch propeller configuration with consequent propeller feathering and engine stopping.

4.4 OIL PRESSURE LIMITS EXCEEDANCE

If oil pressure exceeds its lower or upper limit (0.8 – 7 bar), apply following procedure:

WARNING

Excessive oil pressure drop leads to a high pitch propeller configuration with consequent propeller feathering and engine stopping.

NOTE

An excessive oil pressure value can be counteracted by decreasing propeller rpm.

1. OIL PRESS *CHECK*

If oil pressure exceeds upper limit (7 bar)

2. Throttle Lever *first REDUCE affected engine power by 10%*
3. Propeller Lever *Keep low rpm*
4. OIL PRESS *CHECK (verify if came back within the limits)*
5. **Land as soon as practical**

If oil pressure is under the lower limit (0.8 bar)

2. **Land as soon as practical**

If oil pressure is continuously decreasing

3. **Affected engine** *SECURE (see engine securing procedure on Para. 3)*
4. **Land as soon as possible** applying *one engine inoperative landing* procedure. See Para. 6.6

4.5 LOW FUEL PRESSURE

If fuel pressure decreases below the lower limit (2.2 psi), apply following procedure:

1. Fuel press *CHECK*
2. Fuel quantity *CHECK*
3. Fuel consumption *MONITOR*

If a fuel leakage is deemed likely

5. **Land as soon as possible**.

If a fuel leakage can be excluded:

4. Electrical fuel pump *ON*
5. Feed the affected engine by means of opposite side fuel tank

If pressure does not come back within the limits

6. **Land as soon as practical**

INTENTIONALLY LEFT BLANK

5. OTHER EMERGENCIES

5.1 EMERGENCY DESCENT

CAUTION

Descent with airspeed at VLE, idle power and gear down will provide high descent rates and pitch attitudes up to -15°.

Anticipate altitude capture and return to level flight during emergency descent in order to assure a safe and smooth recovery from maneuver.

1.	Power levers	*IDLE*
2.	Flaps	*UP*
3.	IAS	*below VLO/VLE*
4.	Landing gear	*DOWN*
5.	Airspeed	*Up to VLE*

5.2 TOTAL ELECTRICAL FAILURE

In case of electrical system overall failure, apply following procedure:

1.	Emergency light	*ON if necessary*
2.	MASTER SWITCH	*OFF*
3.	FIELD LH and RH	*BOTH OFF*
4.	MASTER SWITCH	*ON*
5.	FIELD LH and RH	*BOTH ON*

If failure persists

9.	EMERG BATT switch	ON (if engine starting battery installed)

10. **Land as soon as possible** applying *emergency landing gear extension* procedure (see Para. 7.1)

WARNING

An electrical system overall failure prevents flaps operation: landing distance without flaps increases of about 25%.

CAUTION

A fully charged battery can supply electrical power for at least 30 minutes.

5.3 MD 302 BATTERY FAILURE

WARNING

The MD302 internal battery will recharge itself from aircraft power while in normal mode. A battery capacity check occurs each time the unit is powered on. If the battery capacity is determined to be less than 80%, there will be a battery pack warning. If the warning persists more than once in a short time the battery must be replaced.

5.4 STATIC PORTS FAILURE

In case of static ports failure, the alternate static port in the cabin (shown below) must be activated.

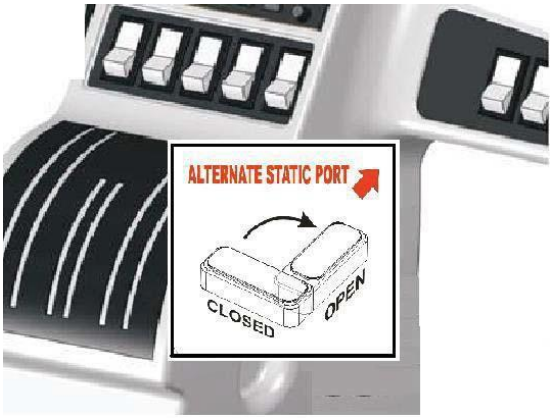

1.	Cabin ventilation	*OFF (hot and cold air)*
2.	ALTERNATE STATIC PORT VALVE	*OPEN*
3.	Continue the mission	

5.4 UNINTENTIONAL FLIGHT INTO ICING CONDITIONS

1. Carburettor heat — *BOTH ON*
2. Pitot heat — *ON*
3. Fly as soon as practical toward a zone clear of visible moisture, precipitation and with higher temperature, changing altitude and/or direction.
4. Control surfaces — *Move continuously to avoid locking*
5. Propellers rpm — *INCREASE to prevent ice build-up on the blades*

WARNING

In event of ice build-up in correspondence of wing leading edges, stall speed increases.

WARNING

Ice build-up on wing, tail fin or flight control surfaces unexpected sudden roll and/or pitch tendencies can be experienced and may lead to unusual attitude and loss of aircraft control.

WARNING

Do not use Autopilot when icing formation is suspected or detected.

5.5 CARBURETTOR ICING

DURING TAKEOFF

The carburettor icing in "full throttle" mode is unlikely.

Take off in known or suspected icing formation is forbidden; in order to dispose of full engine take off power, take-off must be performed with carburettor heating OFF.

IN FLIGHT

Carburettor icing is considered probable when external air temperature is below 15° C and visible air moisture (clouds, mist, haze or fog) or atmospheric precipitation are present.

Generally, an OAT-to-dew point temperature spread lower than 10°C and OAT less than 15°C with visibility lower than 5 km is a positive indication of likely icing formation condition.

Should an inadvertent flight into known or forecast icing condition happen carburettor heating should be selected "ON" as soon as possible: the greater the advance carburettors are warmed the better the chances not to form ice and avoid engine power loss or reduction.

Keep Carb Heating "ON" until engine power is restored and area of possible icing condition is exited.

CAUTION

Carburettor Heating selected to "ON" will cause engine RPM reduction of about 100 RPM causing a sensible available engine power decrease.

5.6 FLAPS CONTROL FAILURE

DURING TAKEOFF

CAUTION

Flap UP take off, requires a T/O distance (50 ft height obstacle distance) increased by about 20%.

1. Airspeed — *Keep below 93 KIAS*
2. **Land as soon as practical**

DURING APPROACH/LANDING

CAUTION

If the flaps control fails, consider the higher stall speed (see Section 5, Para. 6, "Stall Speed") and an increased landing distance of about 25%.

1. Airspeed — *Keep over 75 KIAS*
2. **Land as soon as practical** on a runway of appropriate length

5.7 ELECTRICAL PITCH TRIM CONTROL FAILURE

a) Trim Runaway:

In the event of trim runaway:

1. AP DISC switch (if AP is installed) — PRESS and HOLD
2. TRIM DISC switch — OFF
3. AP DISC switch (if AP is installed) — RELEASE
4. Trim aircraft using trim wheel

b) Trim Jamming:

Should trim control be jammed / inoperative:

1. Pitch trim breaker — CHECK

If circuit breaker is OUT:

2. Trim aircraft using trim wheel

If circuit breaker is IN:

2. TRIM DISC switch — OFF
3. Trim aircraft using trim wheel

6 ONE ENGINE INOPERATIVE PROCEDURES

The ineffectiveness of one engine results in asymmetric traction which tends to yaw and bank the aircraft towards the inoperative engine. In this condition it is essential to maintain the direction of flight compensating the lower traction and counteracting the yawing effects by mean of rudder pedals. To improve directional control, it is advisable to bank the aircraft of about 5° to the side of the operating engine.

CAUTION

In addition, reduced available overall power and extended control surfaces will lead to a performances drop: a quick pitch attitude reduction will allow to keep a minimum safety airspeed.

The higher is the airspeed the better will be lateral and directional control efficiency: never allow airspeed to drop below V_{MCA}.

Best residual climb performances in OEI (One Engine Inoperative) condition have been recorded in Flap Up configuration and at V_{YSE}, which is marked as a Blue Line on the Airspeed indicator (calculated for maximum Take Off Weight and Sea, Level ISA condition) For actual condition V_{YSE} refer to Section 5 Para. 13, "One engine rate of climb".

CAUTION

V_{XSE} is actually very close to V_{YSE} in any condition, thus best climb performance will also be associated with best climb angle (gradient) performance. Refer to Section 5 Para. 14, One-Engine Rate of Climb at V_{xSE}, for relevant data.

6.1 CHARACTERISTIC AIRSPEEDS WITH ONE ENGINE INOPERATIVE

In case of one engine inoperative condition (OEI), pilot shall take into account the airspeeds shown below:

Conditions	Speed (KIAS)	
Minimum aircraft control speed with one engine inoperative and flaps set to T.O. (V_{MC})	62	
Best rate-of-climb speed OEI (V_{YSE})	MTOW 1180 kg	MTOW 1230 kg
	80	84
Best gradient speed OEI (V_{XSE})	79	83

6.2 INFLIGHT ENGINE RESTART

WARNING

After:

- *mechanical engine seizure;*
- *fire;*
- *major propeller damage*

engine restart is not recommended.

1.	Carburettor heat	*ON if required*
2.	Electrical fuel pump	*ON*
3.	Fuel quantity indicator	*CHECK*
4.	Fuel Selector	*CHECK (Crossfeed if required)*
5.	FIELD	*OFF*
6.	Ignition	*BOTH ON*
7.	Operating engine Throttle Lever	*SET as practical*
8.	Stopped engine Throttle Lever	*IDLE*
9.	Stopped engine Propeller Lever	*FULL FORWARD*
10.	Start push-button	*PUSH*
11.	Propeller Lever	*SET at desired rpm*
12.	FIELD	*ON (check for positive ammeter)*
13.	Engine throttle levers	*SET as required*

If engine restart is unsuccessful

14.	EMERG BATT switch	ON (if starting battery installed)
15.	Repeat engine restart procedure	

CAUTION

After engine restart, if practical, moderate propeller rpm and throttle increase to allow OIL and CHT/CT temperatures for stabilizing in the green arcs.

NOTE

If the fuel quantity in the tank which feeds the stopped engine is low, select the opposite side fuel tank by means of the fuel selector.

If engine restart is still unsuccessful:

16.	Affected engine	*SECURE (see engine securing procedure Para. 3)*

17. **Land as soon as possible** applying *one engine inoperative landing* procedure. See Para. 6.6

6.3 ENGINE FAILURE DURING TAKEOFF RUN

BEFORE ROTATION: ABORT TAKE OFF

1.	**Throttle Lever**	***BOTH IDLE***
2.	**Rudder**	***Keep heading control***
3.	**Brakes**	***As required***

When safely stopped:

4.	Failed Engine Ignition	BOTH OFF
5.	Failed Engine Field	*OFF*
6.	Failed Engine Electrical fuel pump	*OFF*

IF THE DECISION IS TAKEN TO CONTINUE THE TAKEOFF:

WARNING

A take-off abort should always be preferred if a safe stop can be performed on ground.

A suggested "GO-NO-GO" criteria is: abort take-off until LG is still down and locked.

Once airborne accelerate to Blue Line Speed (V_{YSE}) before commanding LG retraction.

Take-off planning should take into account that high density altitude and aircraft mass may result in OEI negative climb rate.

V_{YSE} with flap up shall be flown in order to achieve best possible rate of climb after landing gear retraction and engine feathering.

1.	**Operating engine Throttle Lever**	***FULL POWER***
2.	**Operating engine Propeller Lever**	***FULL FORWARD***
3.	**Heading**	***Keep control using rudder and ailerons***
4.	**Attitude**	***Reduce as appropriate to keep airspeed over 62 KIAS***
5.	**Inoperative engine Propeller Lever**	***FEATHER***
6.	**Landing gear control lever**	***UP***
7.	**Airspeed**	***V_{XSE}/V_{YSE} as required***
8.	**Flaps**	***0°***

At safe altitude

9.	Inoperative engine	*Confirm and SECURE*
10.	Operative engine Electrical fuel pump	*Check ON*
11.	Operating engine	*Check engine instruments*
12.	Operating engine Fuel Selector	*Check correct feeding (crossfeed if needed)*

If engine restart is recommended:

13. Apply INFLIGHT ENGINE RESTART procedure *see Para 6.2*

If engine restart is unsuccessful or it is not recommended:

13. Land as soon as possible

14. One engine inoperative landing procedure. *see Para. 6.6*

WARNING

Following:

- *mechanical engine seizure;*
- *fire;*
- *major propeller damage*

engine restart is not recommended.

6.4 ENGINE FAILURE DURING CLIMB

1.	**Autopilot**	**OFF**
2.	**Heading**	***Keep control using rudder and ailerons***
3.	**Attitude**	***Reduce as appropriate to keep airspeed over 62 KIAS***

4.	Operating engine Throttle Lever	*FULL THROTTLE*
5.	Operating engine Propeller Lever	*FULL FORWARD*
6.	Operative engine Electrical fuel pump	*Check ON*
7.	Inoperative engine Propeller Lever	*FEATHER*
8.	Inoperative engine	Confirm and *SECURE*

If engine restart is possible:

9. Apply INFLIGHT ENGINE RESTART procedure *see Para 6.2*

If engine restart is unsuccessful or it is not recommended:

9. **Land as soon as possible**
10. One engine inoperative landing procedure. *see Para. 6.6*

WARNING

Following a mechanical engine seizure, fire or a major propeller damage engine restart is not recommended.

WARNING

Continuation of flight to a safe landing runway must be planned taking into account maximum operating ceiling in OEI condition. Refer to Section 5 Para 1, "One-engine rate of climb".

6.5 ENGINE FAILURE IN FLIGHT

1.	**Autopilot**	***OFF***
2.	**Heading**	***Keep control using rudder and ailerons***
3.	**Attitude**	***Adjust as appropriate to keep airspeed over 62 KIAS***

4.	Operating engine	*Monitor engine instruments*
5.	Operative engine Electrical fuel pump	*Check ON*
6.	Operating engine Fuel Selector	*Check correct feeding (crossfeed if needed)*

If engine restart is possible:

7.	Apply INFLIGHT ENGINE RESTART procedure	*see Para 6.2*

If engine restart is unsuccessful or it is not recommended:

8.	Land as soon as possible	
9.	One engine inoperative landing procedure.	*see Para. 6.6*

WARNING

Following a mechanical engine seizure, fire or a major propeller damage engine restart is not recommended.

WARNING

Continuation of flight to a safe landing runway must be planned taking into account maximum operating ceiling in OEI condition. Refer to Section 5 Para 12. Rate of climb with One Engine Inoperative.

6.6 ONE ENGINE INOPERATIVE LANDING

WARNING

Thoroughly evaluate residual Single Engine Go-Around capabilities and expected climb gradient should a Missed Approach / balked landing be executed.

Refer to Section 5, Para. Single engine go around/Balked landing/climb and Para. 13 and 14- One-engine Rate of Climb at V_{YSE} and V_{XSE}

WARNING

Autopilot must be kept OFF

1.	Seat belts	*Tightly fastened*
2.	Landing lights	*As required*
3.	Operating engine Fuel Selector	*Check correct feeding/crossfeed if needed*
4.	Inoperative engine Propeller Lever	*CHECK FEATHER*
5.	Inoperative engine	*CHECK SECURED*
6.	Operative engine Electrical fuel pump	*ON*

When on final leg:

7.	Flap	*T/O*
8.	Landing gear	*Select DOWN and check three green lights on*
9.	Approach Airspeed	V_{YSE}
10.	Touchdown speed	*70 KIAS*

7 LANDING GEAR SYSTEM FAILURES

7.1 EMERGENCY LANDING GEAR EXTENSION

NOTE

Landing gear extension failure is identified by means a warning message "LANDING GEAR" illuminated: relevant gear leg may not be fully extended and/or locked.
Additionally, the light inside the switch and the warning "LANDING GEAR" will flash inverted red-white, when gear is unlocked in-transit, or if one or more of the landing gears have lost signla and the amber CAS message "GEAR PUMP ON" on the PDF indicates the hydraulic gear pump is operating.

1.	Airspeed	*below* applicable VLO/VLE
2.	Landing gear control lever	*DOWN*
3.	Emergency gear extension access door	*REMOVE*
4.	RH control lever	*ROTATE 90° counterclockwise*
5.	Wait at least 20 seconds	

NOTE

Main Landing Gear legs green lights may be turned on, thus indicating effective main gear legs blocked in down position by mere effect of gravity force.

6.	LH control lever	*ROTATE 180° counterclockwise*
7.	**Land as soon as practical**	

NOTE

The emergency landing gear extension operation takes about 20- sec.

7.2 COMPLETE GEAR UP OR NOSE GEAR UP LANDING

CAUTION

The following procedure applies if Nose Landing Gear is not extended and locked even after emergency extension procedure.

WARNING

A Nose Landing Gear up leg not down and locked might lead to a hazardous situation, especially on uneven runways.

WARNING

If landing gear position is not known, perform a tower fly-by at safe speed and altitude to have confirmation about its situation.

If possible coordinate fire brigade intervention along runway and report number of persons on board and remaining fuel type and quantity.

<u>If a complete Landing Gear up or a Nose Landing Gear up position is reported</u>:

Preparation

1.	Reduce fuel load if time and conditions permit	
2.	Crew and passengers safety belts	*Tightly fastened*
3.	Landing gear control lever	*UP*
4.	Green lights and TRANS light	*CHECK OFF*
5.	Flap setting	*plan approach with Flap Land*
	Before ground contact:	
6.	LH and RH Fuel Selector	*BOTH OFF*
7.	LH and RH Electrical fuel pump	*BOTH OFF*
8.	Ignitions	*ALL OFF*
	On touch down:	
9.	Landing attitude	*slight nose-up and wings levelled,*
10.	Touchdown speed	*as low as 50 KIAS with flap*
11.	Aircraft nose	*gently lower as speed bleeds off*
	After aircraft stops:	
12.	FIELD LH and RH	*BOTH OFF*
13.	MASTER SWITCH	*OFF*

CAUTION

Master switch to OFF impairs radio communication and outside aircraft lighting.

14. Aircraft Evacuation *carry out if necessary*

WARNING

Consider use of ditching emergency exit to escape in case pilot or passenger doors are blocked, watch for engine hot parts, fuel, hydraulic fluid or oil spills. Leave aircraft in upwind direction.

7.3 PARTIAL MAIN LG EXTENSION

CAUTION

The following procedure applies if one or both Main Landing Gear legs are not completely extended and locked even after emergency extension procedure.

WARNING

A partial gear landing (RH and/or LH leg not down and locked) might turn into a hazardous situation, especially on uneven runways.

If possible try to obtain a symmetric gear extension (e.g. by trying further landing gear retraction) in order to avoid swerving after touchdown. A gear up landing is generally considered safer.

WARNING

If landing gear position is not known, perform a tower fly-by at safe speed and altitude to have confirmation about its situation.

If possible coordinate fire brigade intervention along runway and report number of persons on board and remaining fuel type and quantity.

Preparation

1.	Reduce fuel load if time and conditions permit	
2.	Crew and passengers safety belts	*Tightly fastened*
3.	Landing gear control lever	*UP*
4.	Green lights and TRANS light	*CHECK OFF*
5.	Flap setting	*plan approach with Flap Land*

<u>If partially extended landing gear is confirmed:</u>

Before ground contact:

6.	LH and RH Fuel Selector	*BOTH OFF*
7.	LH and RH Electrical fuel pump	*BOTH OFF*
8.	Ignitions	*ALL OFF*

On touch down:

9.	Align for approach	*on the runway centreline*
10.	Touchdown speed	*as low as 50 KIAS*
11.	Touchdown	*on the extended gear only*
12.	Heading and direction	*maintain applying appropriate aileron and rudder/steering control*
13.	Retracted leg	*keep off the ground as long as possible*

After aircraft stops:

14.	FIELD LH and RH	*BOTH OFF*
15.	MASTER SWITCH	*OFF*

CAUTION

Master switch to OFF impairs radio communication and outside aircraft lighting.

16.	Aircraft Evacuation	*carry out if necessary*

WARNING

Consider use of ditching emergency exit to escape in case pilot or passenger doors are blocked, watch for engine hot parts, fuel, hydraulic fluid or oil spills. Leave aircraft in upwind direction.

7.4 FAILED RETRACTION

1.	Airspeed	*Keep below applicable VLO/VLE*
2.	Landing gear control lever	*DOWN*

WARNING

A Landing Gear lever recycle (further retraction attempt) may result in a final partial Landing Gear Extension, which may then compromise safe landing aircraft capability.

3.	Landing Gear lights	*Check*

If a safe landing configuration is obtained (3 greens)

4. Land normally

If a safe landing gear configuration is not obtained:

4.	Emergency LG extension procedure	*Apply (See Para. 7.1)*
5.	Land as soon as practical	

7.5 UNINTENTIONAL LANDING GEAR EXTENSION

CAUTION

An unwanted landing gear extension, with at least one leg moving downward, may be caused by hydraulic fluid loss and it is signaled by

- *significant aerodynamic noise increase;*
- *light and counteractable nose down pitch moment;*
- *red TRANS light turned on.*

1.	Airspeed	*Keep below applicable VLO/VLE*
2.	Landing gear control lever	*DOWN*
3.	Landing Gear lights	*Check*

If a safe landing configuration is obtained (3 greens)

4. Land normally

If a safe landing gear configuration is not obtained:

4.	Emergency LG extension procedure	*Apply (See Para. 7.1)*
5.	**Land as soon as practical**	

INTENTIONALLY LEFT BLANK

8 SMOKE AND FIRE OCCURRENCE

8.1 ENGINE FIRE ON THE GROUND

1.	**Fuel Selectors**	***BOTH OFF***
2.	**Ignitions**	***ALL OFF***
3.	**Electrical fuel pumps**	***BOTH OFF***
4.	**Cabin heat and defrost**	***OFF***
5.	**MASTER SWITCH**	***OFF***
6.	**Parking Brake**	***ENGAGED***
7.	**Aircraft Evacuation**	**carry out immediately**

WARNING

Consider use of ditching emergency exit to escape in case pilot or passenger doors are blocked, watch for engine hot parts, fuel, hydraulic fluid or oil spills. Leave aircraft in upwind direction.

8.2 ENGINE FIRE DURING TAKEOFF RUN

BEFORE ROTATION: ABORT TAKE OFF

1.	**Throttle Lever**	**BOTH IDLE**
2.	**Rudder**	***Keep heading control***
3.	**Brakes**	***As required***

With aircraft under control

4.	**Fuel Selector**	***BOTH OFF***
5.	**Ignitions**	***ALL OFF***
6.	**Electrical fuel pump**	***BOTH OFF***
7.	**Cabin heat and defrost**	***OFF***
8.	**MASTER SWITCH**	***OFF***
9.	**Parking Brake**	***ENGAGED***
10.	**Aircraft Evacuation**	***carry out immediately***

WARNING

Consider use of ditching emergency exit to escape in case pilot or passenger doors are blocked, watch for engine hot parts, fuel, hydraulic fluid or oil spills. Leave aircraft in upwind direction.

IF THE DECISION IS TAKEN TO CONTINUE THE TAKEOFF:

WARNING

A take-off abort should always be preferred if a safe stop can be performed on ground.

A suggested "GO-NO-GO" criteria is: abort take-off until LG is still down and locked.

Once airborne accelerate to Blue Line Speed (V_{YSE}) before commanding LG retraction.

Take-off planning should take into account that high density altitude and aircraft mass may result in OEI negative climb rate.

V_{YSE} with flap up shall be flown in order to achieve best possible rate of climb after landing gear retraction and engine feathering.

1.	**Operating engine Throttle Lever**	***FULL POWER***
2.	**Operating engine Propeller Lever**	***FULL FORWARD***
3.	**Heading**	***Keep control using rudder and ailerons***
4.	**Attitude**	***Reduce as appropriate to keep airspeed over 62 KIAS***
5.	**Fire affected engine Propeller Lever**	***FEATHER***
6.	**Landing gear control lever**	***UP***
7.	**Airspeed**	***V_{XSE}/V_{YSE} as required***
8.	**Flaps**	***0°***

At safe altitude

9.	Cabin heat and defrost	*BOTH OFF*
10.	Fire affected engine Fuel Selector	*Confirm and OFF*
11.	Fire affected engine Ignitions	*Confirm and BOTH OFF*
12.	Fire affected engine Electrical fuel pump	*Confirm and OFF*
13.	Fire affected engine FIELD	*OFF*
14.	**Land as soon as possible** applying *one engine inoperative landing* procedure. See Para. 6.6	

8.3 ENGINE FIRE IN FLIGHT

1.	**Cabin heat and defrost**	***BOTH OFF***
2.	**Autopilot**	***OFF***
3.	**Fire affected engine Fuel Selector**	***Confirm and OFF***
4.	**Fire affected engine Ignition**	***Confirm and BOTH OFF***
5.	**Fire affected engine Throttle Lever**	***Confirm and FULL FORWARD***
6.	**Fire affected engine Propeller Lever**	***Confirm and FEATHER***
7.	**Fire affected engine Electrical fuel pump**	***OFF***
8.	**Heading**	***Keep control using rudder and ailerons***
9.	**Attitude**	***Adjust as appropriate to keep airspeed over 62 KIAS***
10.	**Fire affected engine Field**	***OFF***
11.	**Cabin ventilation**	***OPEN***

12. **Land as soon as possible** applying *one engine inoperative landing* procedure. See Para. 6.6

8.4 ELECTRICAL SMOKE IN CABIN ON THE GROUND

1.	**MASTER SWITCH**	***OFF***
2.	**Cabin heat and defrost**	***OFF***
3.	**Throttle Lever**	***BOTH IDLE***
4.	**Ignitions**	***ALL OFF***
5.	**Fuel Selector**	***BOTH OFF***
6.	**Parking Brake**	***ENGAGED***
7.	**Aircraft Evacuation**	**carry out immediately**

WARNING

Consider use of ditching emergency exit to escape in case pilot or passenger doors are blocked, watch for engine hot parts, fuel, hydraulic fluid or oil spills. Leave aircraft in upwind direction.

8.5 ELECTRICAL SMOKE IN CABIN DURING FLIGHT

1.	**Cabin ventilation**	***OPEN***
2.	**Emergency light**	***ON***
3.	**Standby attitude indicator switch**	***ON***
4.	**Gain VMC conditions as soon as possible**	

In case of cockpit fire:

5.	**Fire extinguisher**	***use toward base of flames***

CAUTION

A tripped circuit breaker should not be reset.

If smoke persists, shed electrical supply in order to isolate faulty source by:

6.	FIELD LH and RH	*OFF*
7.	AVIONICS LH and RH	*OFF*
8.	CROSS BUS LH and RH	*BOTH OFF*

CAUTION

A fully charged battery can supply electrical power for at least 30 minutes.

If faulty source is found:

9. It may be possible to restore non faultypower sources (one at a time)

If smoke persists:

WARNING

Before total electrical system shutdown consider gaining VMC condition, at night set personal emergency light on.

Only emergency light and emergency ADI will be electrically powered.

All radio COM and NAV, Landing Gear lever (normal mode) and indication lights, electrical trims and flaps will be unserviceable.

10.	MASTER SWITCH	*OFF*

11. **Land as soon as possible**

When on ground:

12. Aircraft Evacuation *carry out as necessary*

WARNING

Consider use of ditching emergency exit to escape in case pilot or passenger doors are blocked, watch for engine hot parts, fuel, hydraulic fluid or oil spills. Leave aircraft in upwind direction.

9 UNINTENTIONAL SPIN RECOVERY

WARNING

Spin behaviour has not been demonstrated since certification process does not required it for this aircraft category.

Intentional spin is forbidden.

Stall with one engine inoperative is forbidden.

Should an unintentional spin occur, the classic recovery manoeuvre is deemed as being the best action to undertake:

1. **Both engines throttles**	***idle***
2. **Flight Controls**	***centralize***
3. **Rudder**	***fully against rotation until it stops***

10 LANDING EMERGENCIES

10.1 LANDING WITHOUT ENGINE POWER

In case of double engine failure both propellers should be feathered to achieve maximum efficiency. Best glide speed is attained with flap UP and equals V_Y for current aircraft mass and air density altitude. Refer to Section 5, Para. "Enroute Rate of Climb".

CAUTION

Normal landing gear extension requires MASTER switch ON, an efficient battery and takes around 20 seconds.
LG selection should be appropriately anticipated when sure on final.
Flap can be set to T/O or LAND when sure on final to reduce landing ground roll on short field.

Touchdown speed can be as low as 50 kt with flap down.

1. Airspeed

MTOW 1180kg	MTOW 1230 kg
V_Y = 83 KIAS	V_Y = 84 KIAS

2. Flaps — *UP*
3. Emergency landing field — *Select*

WARNING

Emergency landing strip should be chosen considering surface condition, length and obstacles. Wind can be guessed by smoke plumes direction and tree tops or grass bending. Select touchdown direction according to the furrows of a plowed field, not across.

4. Safety belts — *FASTEN and tighten*
5. Flaps — *Set when landing is assured*
6. Landing gear control lever — *DOWN when landing is assured*

CAUTION

To reduce landing gear extension time, evaluate use of emergency control system which requires about 12 sec.

Before touch down

7.	Fuel Selector	*BOTH OFF*
8.	Electrical fuel pump	*BOTH OFF*
9.	Ignitions	*ALL OFF*
10.	MASTER SWITCH	*OFF*

When stopped

11.	Aircraft Evacuation	*carry out if necessary*

WARNING

Consider use of ditching emergency exit to escape in case pilot or passenger doors are blocked, watch for engine hot parts, fuel, hydraulic fluid or oil spills. Leave aircraft in upwind direction.

10.2 LANDING WITH NOSE LANDING GEAR TIRE DEFLATED

WARNING

If possible, as a nose landing gear flat tire condition is known, coor- dinate fire brigade intervention along runway and report number of persons on board and remaining fuel type and quantity.

If Nose Landing Gear flat tire is confirmed:

Preparation

1.	Crew and passengers safety belts	*Tightly fastened*
2.	If time permits	*Burn fuel to lower landing weight*
3.	Flap setting	*plan approach with Flap Land*

Before ground contact:

4.	Fuel Selector	*BOTH OFF*
5.	Electrical fuel pump	*BOTH OFF*
6.	Ignitions	*ALL OFF*

On touch down:

7.	Landing attitude	*slight nose-up and wings levelled,*
8.	Touchdown speed	*as low as 50 KIAS with flap*
9.	Aircraft nose	*gently lower as speed bleeds off*

After aircraft stops:

10.	FIELD LH and RH	*BOTH OFF*
11.	MASTER SWITCH	*OFF*

CAUTION

Master switch to OFF impairs radio communication and outside air-craft lighting.

12.	Aircraft Evacuation	*carry out if necessary*

WARNING

Consider use of ditching emergency exit to escape in case pilot or passenger doors are blocked, watch for engine hot parts, fuel, hydraulic fluid or oil spills. Leave aircraft in upwind direction.

10.3 LANDING WITH A KNOWN MAIN LANDING GEAR TIRE DEFLATED

WARNING

An asymmetrical landing gear tire condition (RH and/or LH tires deflated) might turn into a hazardous situation, especially on uneven runways.

WARNING

If possible, as a landing gear tires condition is known, coordinate fire brigade intervention along runway and report number of persons on board and remaining fuel type and quantity.

If a main Landing Gear flat tire is confirmed:

Preparation

1.	Crew and passengers safety belts	*Tightly fastened*
2.	Flap setting	*plan approach with Flap Land*

Before ground contact:

3.	Ignitions	ALL OFF
4.	LH and RH Fuel Selector	BOTH OFF
5.	LH and RH Electrical fuel pump	BOTH OFF

On touch down:

6.	Align for approach	*on the runway centreline*
7.	Touchdown speed	*as low as 50 KIAS*
8.	Touchdown	*on the good tire gear only*
9.	Heading and direction	*maintain applying appropriate aileron and rudder/steering control*
10.	Flattened tire	*keep off the ground as long as possible*

After aircraft stops (or if runway departure is imminent):

11.	FIELD LH and RH	*BOTH OFF*
12.	MASTER SWITCH	*OFF*

CAUTION

Master switch to OFF impairs radio communication and outside aircraft lighting.

13.	Aircraft Evacuation	*carry out if necessary*

WARNING

Consider use of ditching emergency exit to escape in case pilot or passenger doors are blocked, watch for engine hot parts, fuel, hydraulic fluid or oil spills. Leave aircraft in upwind direction.

10.4 LANDING WITHOUT BRAKES

CAUTION

If possible, select an airport with suitable runway length.

Otherwise, evaluate the possibility to perform a gear up landing (refer to procedure reported on Para. 7.2). In the latter case consider the increasing hazard of an uneven pavement.

1. Safety belts	*FASTEN*

After touch down if runway is deemed insufficient to decelerate:

2. Fuel Selector	*BOTH OFF*
3. Electrical fuel pumps	*BOTH OFF*
4. Ignitions	*ALL OFF*
5. FIELD LH and RH	*BOTH OFF*
6. MASTER SWITCH	*OFF*

CAUTION

Master switch to OFF impairs radio communication and outside aircraft lighting.

Before end of runway or if runway departure is imminent:

1. Landing gear control lever	*UP*

After aircraft stops:

2. Aircraft Evacuation	*carry out if necessary*

WARNING

Consider use of ditching emergency exit to escape in case pilot or passenger doors are blocked, watch for engine hot parts, fuel, hydraulic fluid or oil spills. Leave aircraft in upwind direction.

11 AIRCRAFT EVACUATION

WARNING

Leave the aircraft when engines are fully stopped. Watch for engine hot parts and fuel, hydraulic fluid or oil spills when using fuselage doors. If fuselage doors are unserviceable escape through the ditching emergency exit

In case of engine fire escape from opposite or upwind aircraft side.

Verify (if not yet performed):

1.	**Fuel Selectors**	***BOTH***
2.	**Ignitions**	***OFF***
3.	**Electrical fuel pumps**	***ALL OFF***
4.	**MASTER SWITCH**	***BOTH***
5.	**Parking Brake**	***OFF OFF***
6.	**Leave the aircraft usingemergency exits**	

12 DITCHING

WARNING

Contact with water shall happen with aircraft longitudinal axis and direction of motion parallel to the wave at the minimum possible speed. Keep the nose up as long as possible.

Once in the water, the aircraft shall be evacuated through the ditching emergency exit, if available put life vest on and set dinghy out first. Inflate them only outside the aircraft.

If available, try to approach any existing ship in the vicinity in order to be rapidly located and rescued right after ditching.

1.	Landing gear	*UP*
2.	Safety belts	*Tighten and fastened*
3.	Flaps	*FULL*

Before water impact

4.	Fuel Selector	*BOTH OFF*
5.	Electrical fuel pump	*BOTH OFF*
6.	Ignitions	*ALL OFF*
7.	MASTER SWITCH	*OFF*
8.	FIELD LH and RH	*BOTH OFF*
9.	Impact speed	*50 KIAS*

Aircraft evacuation

10.	Emergency exit handle	*rotate clockwise*
11.	Latch door	*push outward*
12.	Life vests	*don*
13.	Evacuate the aircraft	

Supplement G19: pages replacement instructions

SECTION 4 - NORMAL PROCEDURES

Supplement G19 Section 4 – NORMAL PROCEDURES
replaces Basic AFM Section 4 as a whole

INTENTIONALLY LEFT BLANK

SECTION 4 – NORMAL PROCEDURES

INDEX

1. INTRODUCTION 3
1.1. Normal ops general recommendations 3

2. AIRSPEEDS 7
2.2. Normal operations 7
2.3. Single engine training 8

3. NORMAL PROCEDURES CHECKLIST 9
3.1 Recommendations for cold weather operations 9
3.2 Pre-flight check – aircraft walk-around 11
3.3 Cockpit inspections 17
3.4 Engine starting 18
3.5 Before taxiing 20
3.6 Taxiing 20
3.7 Prior to takeoff 21
3.8 Line-up 22
3.9 Takeoff and climb 23
3.10 Cruise 24
3.11 Turbulent air operation 24
3.12 Descent and approach 25
3.13 Before landing 25
3.14 Balked landing/missed approach 26
3.15 After landing 26
3.16 Parking/shut down 27
3.17 Postflight checks 28

4. ADDITIONAL GUIDANCE FOR RNAV 29
4.1. Approach Applications 351
4.2. PBN (RNAV & RNP) Operational Eligibility 354

5. GROUND TOWING, PARKING AND MOORING 35
5.1. Towing 35
5.2. Parking 35
5.3. Mooring 36

INTENTIONALLY LEFT BLANK

1. INTRODUCTION

Section 4 describes checklists and recommended procedures for the conduct of normal operations for ***P2006T*** aircraft.

1.1. NORMAL OPS GENERAL RECOMMENDATIONS

The following points should be always brought to attention to pilot/instructor/operator when operating a Tecnam aircraft equipped with variable pitch propeller:

1. Propeller governor ground check.

As prescribed by the propeller/governor manufacturer, a drop of 400/500 propeller RPM should be produced during this check. Its aim is to confirm the governor efficiency, not its complete feathering function.

Especially during the first cycle of propeller lever pulling, the governor tendency is to respond to the input with consistent delay, causing the pilot to continue moving back the propeller lever until an abrupt RPM change is observed. This causes an excessive drop in propeller speed that may reach up to 800 RPM in some cases and, consequently, a drop of up to 2000 engine shaft RPM. The long term result is a major wear of engine gearbox, bushings and pistons. In some cases, it may also result in detonation.

In order to avoid these long term adverse effects, the governor ground check should be performed by slowly and gently pulling the propeller lever. The purging cycle should be repeated 3 times, making sure that the governor closely and firmly controls the rpm.

The following recommendations have to be followed during the test:

- propeller speed drops shall be of 400/500 propeller RPM
- the cycle shall be repeated 3 times
- the pilot shall be ready to push the propeller lever if a drop of >500 RPM is recorded

2. Power changes.

When power setting changes are required in any flight condition, remember the following correct procedure:

Power increase = FIRST Prop THEN Map

Power reduction = FIRST Map THEN Prop

Useful guideline chart that could be used for best propeller/manifold combination is following reported:

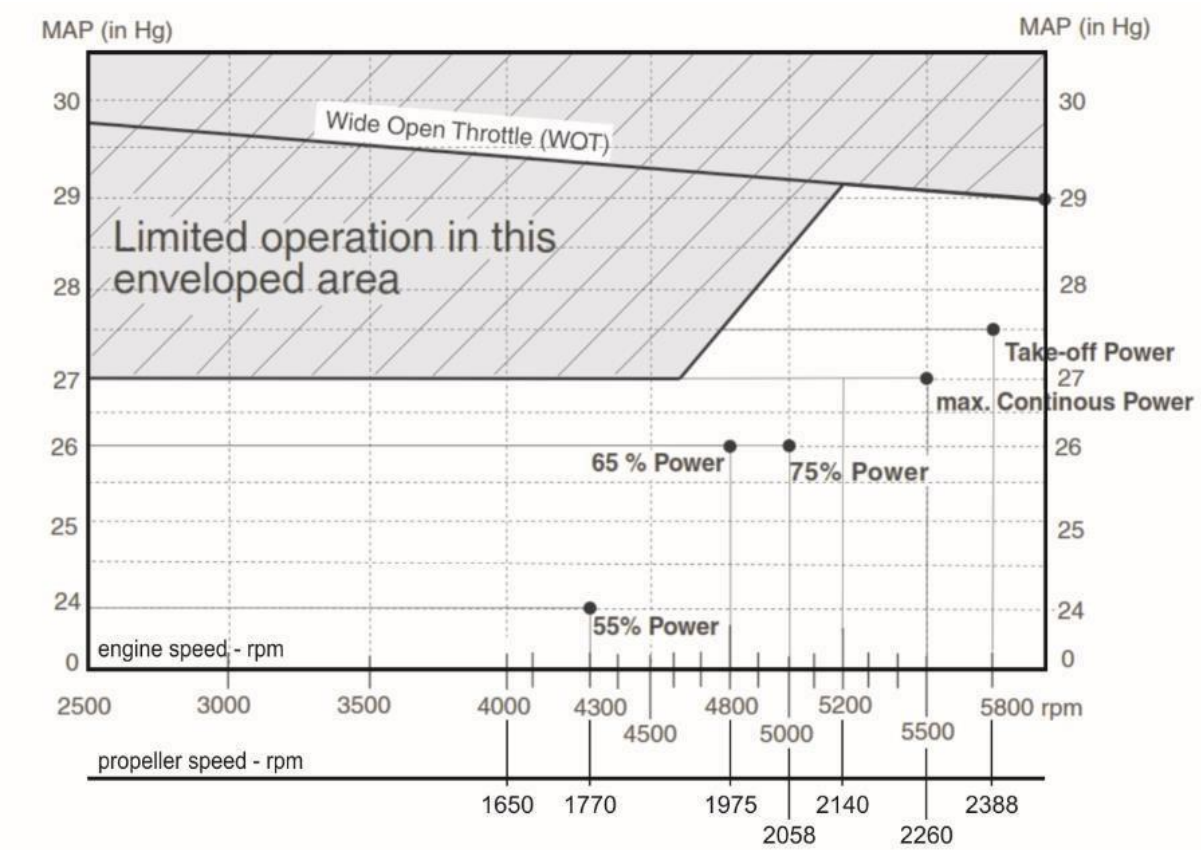

3. Suitable Fuels.

Tecnam remember operators to fill the aircraft with approved and suitable fuels. Use of not approved/unknown fuels may cause damages to the engine.

ONLY USE APPROVED FUELS

For details refer to Section 2 of this manual (or applicable Supplement) and latest issue of Rotax SI-912-016

G1000 NXi system use

For safety reasons, G1000 NXi operational procedures must be learned on the ground.

Document Garmin G1000 NXi Pilot's Guide for Tecnam P2006T (P/N 190-02286-00) – last issue, reports detailed instructions to operate the system in subject. Make always reference to the above mentioned document.

CAUTION

Garmin G1000 NXi Pilot's Guide for Tecnam P2006T (P/N 190-02286-00) – last issue - must be carried onboard the airplane at all times.

WARNING

To reduce the risk of unsafe operation, carefully review and understand all aspects of the G1000 NXi Pilot's Guide (P/N 190-02286-00) documentation at the last issue and the AFM for the aircraft. Thoroughly practice basic operation prior to actual use. During flight operations, carefully compare indications from the G1000 NXi to all available navigation sources, including the information from other NAVAIDs, visual sightings, charts, etc. For safety purposes, always resolve any discrepancies before continuing navigation.

WARNING

Do not use basemap (land and water data) information for primary navigation. Basemap data is intended only to supplement other approved navigation data sources and should be considered as an aid to enhance situational awareness. Do not use outdated database information. Databases used in the G1000 NXi system must be updated regularly in order to ensure that the information remains current. Pilots using any outdated database do so entirely at their own risk. Reference "Garmin G1000 NXi Pilot's Guide for the Tecnam P2006T (P/N 190-02286-00)", last issue, Appendix B concerning SD card use and databases.

WARNING

For safety reasons, G1000 NXi operational procedures must be learned on the ground.

WARNING

Because of variation in the earth's magnetic field, operating the G1000 NXi within the following areas could result in loss of reliable attitude and heading indications.

North of 72° North latitude at all longitudes; South of 70° South latitude at all longitudes; North of 65° North latitude between longitude 75° W and 120° W. (Northern Canada); North of 70° North latitude between longitude 70° W and 128° W. (Northern Canada); North of 70° North latitude between longitude 85° E and 114° E. (Northern Russia); South of 55° South latitude between longitude 120° E and 165° E. (Region south of Australia and New Zealand).

WARNING

The altitude calculated by G1000 NXi GPS receivers is geometric height above Mean Sea Level and could vary significantly from the altitude displayed by pressure altimeters, such as the GDC 72 Air Data Computer, or other altimeters in aircraft. GPS altitude should never be used for vertical navigation. Always use pressure altitude displayed by the G1000 NXi PFD or other pressure altimeters in aircraft.

NOTE

If the pilot profile is changed during the flight, the HSI could not indicate the correct LOC or VOR indication until the pilot manually tunes the active frequency. Make sure that the displayed indication on the HSI indicator is consistent with the selected frequency.

NOTE

The data contained in the terrain and obstacle databases comes from government agencies. Garmin accurately processes and cross-validates the data, but cannot guarantee the accuracy and completeness of the data. Reference "Garmin G1000 NXi Pilot's Guide for the Tecnam P2006T" (P/N 190-02286-00), last issue, Appendix B concerning SD card use and databases.

NOTE

Use of polarized eyewear may cause the flight displays to appear dim or blank.

MD302 system use

WARNING

"The detailed description, operation and functionalities of MD302 Stand By Attitude Module are provided on MD302 Stand-By Attitude Module Pilot's Guide" document P/N 9017846 rev.D, which is to be considered to be attached to this AFM and kept onboard the aircraft.

2. AIRSPEEDS

2.1. NORMAL OPERATIONS

The following airspeeds are those which are significant for normal operations, with reference to both MTOW: 1180 kg and 1230 kg (if Supplement G10 - Increased MTOW @1230 KG - is applicable).

		MTOW	
	FLAPS	**1180kg**	**1230 kg**
Rotation Speed (in takeoff, V_R)	T/O	**64 KIAS**	**65 KIAS**
Best Angle-of-Climb Speed (V_X)	0°	**73 KIAS**	**72 KIAS**
Best Rate-of-Climb speed (V_Y)	0°	**80 KIAS**	**84 KIAS**
Approach speed	T/O	**90 KIAS**	**90 KIAS**
Final Approach Speed	FULL	**70 KIAS**	**71 KIAS**
Manoeuvring speed (V_A)	0°	**118 KIAS**	**122 KIAS**
Never Exceed Speed (V_{NE})	0°	**167 KIAS**	**171 KIAS**

2.2. SINGLE ENGINE TRAINING

V_{SSE} is a speed selected as training aid for pilots in the handling of multi-engine aircraft. It is the minimum speed for intentionally rendering on engine inoperative in flight. This minimum speed provides the margin the manufacturer recommends for us when intentionally performing engine inoperative maneuvers during training. Shutting down an engine for training shall not become a habit; for safety purpose, and in order to optimise training, engine shutdown to perform OEI shall be executed only when necessary and required by regulations (e.g. during flight check, skill tests or demonstration as per 14CFR Part61 or similar).

A simulated feather condition is obtained with propeller lever full forward and throttle lever set at 13.5 in Hg MAP at 70-90 KIAS and 2000-4000 ft (density altitude).

Recommended safe simulated OEI speed (V_{SSE})	**70 KIAS**

NOTE *Keep speed above V_{SSE} for simulated OEI training operations.*

In normal operations, shutting down an engine for training shall not become a habit, in particular for safety reasons and in order to optimise training; engine shutdown to perform OEI shall be executed only when required by regulations (e.g. during flight check, skill tests or demonstration as per 14CFR Part61 or equivalent rule).

The continuous operation of engine securing for training may indeed cause long term damages to the engine itself due to the high load coming from propeller (which is in feathering angle during the engine re-starting).

3. NORMAL PROCEDURES CHECKLIST

3.1 RECOMMENDATIONS FOR COLD WEATHER OPERATIONS

Engine cold weather operation

Refer to Rotax 912 Series Operators Manual, last issue, providing instructions for operating media (lubricant and coolant specifications) to be used in cold weather operation.

Parking

When the airplane is parked in cold weather conditions and it is expected to be soaked at temperatures below freezing, some precautions need to be taken.

Clear snow, slush, and ice in the parking area, or at least clear the area around the tires to prevent them from freezing to the ground. Apply plugs on Pitot and static ports.

The exposed airframe parts should be protected, especially the engines, the wheels, the blades and the gears against the snow or ice accumulation. Water and other freezable liquids should be removed from the airplane.

Standing water that could freeze should be removed from critical parts, as flaps and ailerons hinges, trim tabs hinges, drain points, LG doors, cabin doors etc.

With an ambient temperature of below -20°C, remove battery and store in a warm dry place; additionally in order to prevent a heavy discharge and to increase the battery life time, it is recommended to use an external power source for engine starting at temperatures lower than –15°C.

When wheel brakes come in contact with ice, slush, or snow with freezing conditions, the brake disk may freeze: park the aircraft with parking brake control knob in OFF position and ensure the aircraft is properly chocked and moored.

In any case, when the probability of ice, snow, or heavy frost is forecast, the use of a hangar is strongly recommended.

An external inspection of the aircraft is performed before each flight, as prescribed on Section 3.1.

For cold weather operations, the crew must focus on the check of following parts of airplane (free of snow/ice/standing water).

- control surfaces
- fuselage
- wings
- vertical and horizontal stabilator
- stall warning switch
- engine inlets
- engines draining points
- propeller blades
- LG doors
- Pitot, and static ports
- fuel tank vents

Tires show low pressure in cold weather: the required adjustments to inflation pressure should be performed on tires cooled to ambient temperature.

If the crew detects ice, anti icing products are not allowed. To remove ice, tow the aircraft in the hangar and operate with a soft brush or a humid cloth.

WARNING

Removal of snow/ice accumulations is necessary prior to take-off because they will seriously affect airplane performance. Aircraft with ice/snow accumulation is not cleared for flight.

If the aircraft must be operated in cold weather conditions within the range -25ºC to -5ºC, it is suggested to perform following procedure in order to speed up the engine warm-up:

- Tow the airplane in a warm hangar (warmer than -5°C);
- Let airplane temperature stabilize;
- Check pressure in hydraulic system, recharge if necessary;
- Heat the cabin to a suitable value to avoid windshield frost in flight; an electrical fan heater may be used inside the cabin;
- Tow airplane outside and perform engine starting as soon as possible.

3.2 PRE-FLIGHT CHECK – AIRCRAFT WALK-AROUND

To perform the aircraft walk-around, carry out the checklists according to the pattern shown in Figure 4-1.

WARNING

If ignition switches are turned ON, a propeller movement can cause the engine starting with consequent hazard for people nearby.

NOTE

Visual inspection is defined as follows: check for defects, cracks, delamination, excessive play, unsafe or improper installation as well as for general condition, presence of foreign objects, slippage markers etc. For control surfaces, visual inspection also involves additional check for freedom of movement. Always check the ground in the area of the aircraft for evidence of fuel, oil or operating fluids leakages.

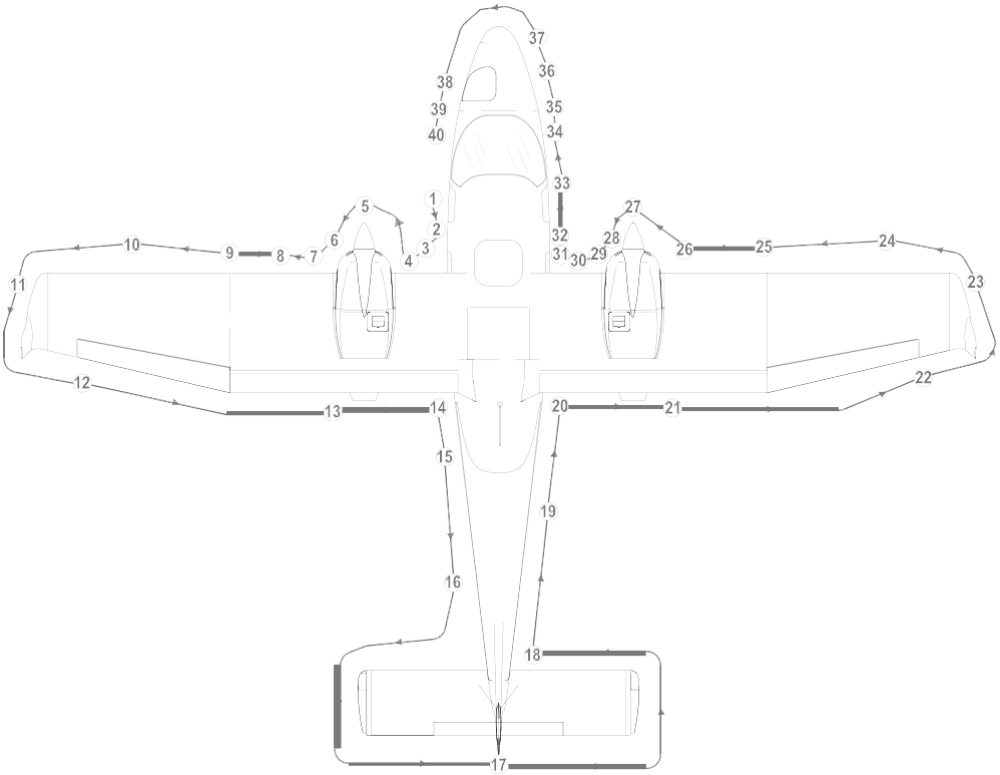

Figure 4.1

1.	Pilot door and cabin	*Check door for integrity. Turn ON the Master Switch and check Stall Warning switch for operation and condition; check lighting of Landing/Taxi/Nav/Strobe lights, then turn OFF the Master Switch.*
2.	Left main landing gear	*Check fuselage skin status, tire status (cuts, bruises, cracks and excessive wear), slippage markers integrity, gear structure and shock absorber, hoses, gear door attachments and gear micro-switches. There should be no sign of hydraulic fluid leakage.*
3.	Wheel chock	*Remove if employed*
4.	Propeller and spinner	*The propeller blades and spinner should be free of cracks, nicks, dents and other defects and should rotate freely. Check fixing and lack of play between blades and hub.*
5.	Left engine nacelle	*Perform following inspections:* *a) Check the surface conditions.* *b) Nacelle inlets and exhausts openings must be free of obstructions. If inlet and outlet plugs are installed, they should be removed.* *c) Check radiators. There should be no indication of leakage of fluid and they have to be free of obstructions.* *d) <u>Only before the first flight of a day</u>:* *(1) Verify coolant level in the expansion tank, replenish as required up to top (level must be at least 2/3 of the expansion tank).* *(2) Verify coolant level in the overflow bottle through the slot under the nacelle: level must be between min. and max. mark. Replenish if required removing the upper cowling; after that, install upper cowling checking for interferences with radiators* *(3) Turn the propeller by hand to and fro, feeling the free rotation of 15°or 30° before the crankshaft starts to rotate. If the propeller can be turned between the dogs with practically no friction at all further investigation is necessary. Turn propeller by hand in direction of engine rotation several times and observe engine for odd noises or excessive resistance and normal compression.*

		e) Check oil level and replenish as required. Prior to oil check, switch off both ignitions circuits and turn the propeller by hand in direction of engine rotation several times to pump oil from the engine into the oil tank. This process is finished when air is returning back to the oil tank and can be noticed by a murmur from the open oil tank. Prior to long flights oil should be added so that the oil level reaches the "max" mark. *f) Drain off Gascolator for water and sediment (drain until no water comes off). Then make sure drain valve is closed.* *g) Check drainage hoses clamps* *h) Verify all parts are fixed or locked.* *i) Verify all inspection doors are closed.*
6.	Air induction system	*Check engine air inlet for integrity and correct fixing. The air intake filter must be free of obstructions.*
7.	Left fuel tank	*Check that the refuelling port cap is properly secured, then perform the fuel tank sump drainage operating the related valve which, after operation, must be checked closed. Fuel must checked for water and sediment. Verify the tank vent outlet is clear.*
8.	Landing and taxi lights	*Visual inspection*
9.	Left wing leading edge	*Visual inspection. Check cabin ventilation inlet and carburettor heating inlet for condition and free of obstruction. Check stall strip.*
10.	Left wing top and bottom panels	*Visual inspection*
11.	Left winglet, nav and strobe lights, static discharge wick	*Check for integrity and fixing*
12.	Left aileron and balance mass	*Visual inspection, remove tie-down devices and control locks if employed.*
13.	Left Flap and hinges	*Visual inspection*
14.	Left static port	*Remove protective cap – Visual inspection*
15.	Antennas	*Check for integrity*

16.	Gear pump, external power and battery compartment	*Check emergency landing gear extension system pressure (low pressure limit: 20 bar), external power and battery compartments closure.*
17.	Horizontal and vertical empennage and tabs. Static discharge wicks.	*Check the actuating mechanism of control surfaces and the connection with related tabs. Check wicks for integrity. Remove tie-down device if employed.*
18.	Stabilator leading edge	*Check for integrity*
19.	Fuselage top and bottom skin	*Visual inspection*
20.	Right static port	*Remove protective cap – Visual inspection*
21.	Right Flap and hinges	*Visual inspection*
22.	Right aileron and balance weight	*Visual inspection, remove tie-down devices and control locks if employed.*
23.	Right winglet, nav and strobe lights, static discharge wick	*Check for integrity and fixing and lighting*
24.	Right wing top and bottom panels	*Visual inspection*
25.	Right wing leading edge	*Visual inspection. Check cabin ventilation inlet and carburettor heating inlet for condition and free of obstruction. Check stall strip.*
26.	Right fuel tank	*Check that the refuelling port cap is properly secured, then perform the fuel tank sump drainage operating the related valve which, after operation, must be checked closed. Fuel must checked for water and sediment. Verify the tank vent outlet is clear.*
27.	Propeller and spinner:	*The propeller blades and spinner should be free of cracks, nicks, dents and other defects and should rotate freely. Check fixing and lack of play between blades and hub.*
28.	Right engine nacelle	*Apply check procedure reported in the walk-around station 5 and 6.*
29.	Passenger door and cabin	*Check door for integrity. Check safety belts for integrity and baggage for correct positioning and fastening. Check ditching emergency exit safety lock. Check passengers ventilation ports for proper setting.*

30.	Right main landing gear	*Apply check procedure reported in the walk-around Station 2*
31.	Wheel chock	*Remove if employed*
32.	Bottom fuselage antennas	*Check for integrity*
33.	Right cabin ram-air inlet	*Visual inspection*
34.	Right Pitot tube	*Remove protective cap and check for any obstruction*
35.	Nose landing gear	*Check tire status (cuts, bruises, cracks and excessive wear),slippage markers integrity, gear structure and retraction mechanism, shock absorber and gear doors attachments. There should be no sign of hydraulic fluid leakage.*
36.	Radome	*Check for integrity*
37.	Radome access door	*Visual inspection*
38.	Left Pitot tube	*Remove protective cap and check for any obstruction*

NOTE *Avoid blowing inside Pitot-tube and inside airspeed indicator system's static ports as this may damage instruments.*

INTENTIONALLY LEFT BLANK

3.3 COCKPIT INSPECTIONS

CAUTION

Instruct passengers on how to use safety belts and normal / emergency exits. Passenger embarkation should be done, avoiding contact with hot / oily parts such as engine exhaust pipes, drainage tubes and wheel brakes, or sharp wing control surfaces edges. Do not smoke on board.

CAUTION

Clean the displays using a clean, lint-free cloth and an eyeglass lens cleaner that is specified as safe for anti-reflective coatings. Cleaners containing ammonia will harm the anti-reflective coating.

1.	Parking brake	*CHECK ENGAGED*
2.	AFM and Garmin Pilot's Guide	*CHECK on board*
3.	Weight and balance	*CHECK if within the limits*
4.	Flight controls	*Remove seat belt used as lock*
5.	PFD and MFD	*CHECK clean*
6.	Seat	*Adjust as required*
7.	Seat belt	*Fastened*
8.	Passenger briefing	*Completed*
9.	Doors	*CLOSED AND LOCKED*
10.	Landing gear control lever	*CHECK DOWN*
11.	Breakers	*All IN*
12.	MASTER SWITCH	*ON*
13.	Fuel quantity	*CHECK*
14.	RH fuel selector	*RIGHT*
15.	LH fuel selector	*LEFT*
16.	RH Electrical Fuel Pump	*ON, check fuel pressure gauge correct operation.*
17.	RH Electrical Fuel pump	*OFF, check pressure decreased at zero*
18.	LH Electrical Fuel Pump	*ON, check fuel pressure gauge correct operation.*
19.	LH Electrical Fuel pump	*OFF, check pressure decreased at zero*
20.	Strobe light	*ON*
21.	Landing gear lights	*TEST*
22.	ELT	*CHECK set to ARM*
23.	Fire detector	*TEST*
24.	Engine levers friction	*Adjust if required*
25.	Flight controls	*CHECK free*

26.	Alternate static port	*CHECK closed*
27.	Cabin heat	*CLOSED*
28.	Flaps	*Operate control to FULL position. Verify extension. Retract flaps.*
29.	Pitch trim control	*Set to neutral position.*
30.	Rudder trim control	*Set to neutral position.*
31.	Eng. Starting Battery Voltmeter (if installed)	*Check 12 to 14 Volt*

3.4 ENGINE STARTING

CAUTION

Avionics switches must be set OFF during engine starting to prevent avionic equipment damage.

1	Start clearance	*Obtain if needed*
2	CHRONOMETER	*START*

Right engine starting

1	RH Throttle lever	*IDLE*
2	RH Carburetor heat	*OFF*
3	RH Propeller Lever	*FULL FORWARD*
4	RH Choke	*ON if required*

NOTE

Cold engine
Throttles idle (fully closed), chokes fully opened.
Soon after starting, advance the throttle to let the propeller reach 800 RPM and slowly close the choke. Keep engine at 900 RPM for warm up period.

Hot engine
Park the aircraft with the nose pointing into wind in order to aid cooling.
Keep chokes closed and slowly open the throttles one inch while cranking.

Flooded Engine after engine start failure
Keep chokes closed, open throttle fully and start the engine, then quickly reduce throttles to idle

5	RH Electrical Fuel pump	*ON, check advisory light ON and positive fuel press build up*
6	STROBES	*ON*
7	RH engine propeller zone	*CHECK free*
8	RH ignitions switches	*BOTH ON*

WARNING

Ensure that the area around engine propeller disc is clear from people and obstacles. Call out for propeller free.

9	RH start pushbutton	*PUSH*
10	RH engine oil gauge	*CHECK if increasing within 10 sec. (max 7 bar in cold operation)*
11	RH Throttle lever	*Advance to reach 1200 RPM*
12	RH Choke	*OFF*
13	RH Field	*ON*
14	RH Avionics	*ON*
15	RH Cross bus	*ON*
16	RH Ammeter	*CHECK Amps positive*
17	RH Voltmeter	*CHECK 12 to 14 Volt*
18	RH Electrical fuel pump	*OFF*

Left engine starting

1	LH Throttle lever	*IDLE*
2	LH Carburetor heat	*OFF*
3	LH Propeller Lever	*FULL FORWARD*
4	LH Choke	*ON if required*
5	LH Electrical Fuel pump	*ON, check advisory light ON and positive fuel press build up*
6	LH engine propeller zone	*CHECK free*
7	LH ignitions switches	*BOTH ON*

WARNING

Ensure that the area around engine propeller disc is clear from people and obstacles. Call out for propeller free.

8	LH start pushbutton	*PUSH*
9	LH engine oil gauge	*CHECK if increasing within 10 sec. (max 7 bar in cold operation)*
10	LH Throttle lever	*ADVANCE to reach 1200 RPM*

11	LH Choke	*OFF*
12	LH Field	*ON*
13	LH Avionics	*ON*
14	LH Cross bus	*ON*
15	LH Ammeter	*CHECK Amps positive*
16	LH Voltmeter	*CHECK 12 to 14 Volt*
17	LH Electrical fuel pump	*OFF*

3.5 BEFORE TAXIING

1	Let the engines warm up to a minimum oil temperature of 50°C at 1200 RPM	
2	Nav , Taxi and Landing lights	*ON*
3	Transponder	*Stand-by*
4	Passengers and crews seat belts	*Fastened*
5	Passengers and crews headphones	*Set as required*

3.6 TAXIING

NOTE *Ensure that the main and passengers' doors warning lights are turned off.*

1	LH/RH Fuel Selector	*As required*
2	LH and RH fuel pressure	*Monitor*
3	Parking Brake	*RELEASE*
4	Flight instruments	*CHECK*
5	Engine instruments	*CHECK*
6	Altimeter	*SET both and crosscheck max difference 150 ft*
7	Brakes	*TEST*

3.7 PRIOR TO TAKEOFF

1	Parking Brake	*ENGAGED*
2	RH Fuel Selector	*RIGHT*
3	LH Fuel Selector	*LEFT*
4	LH and RH fuel pressure	*CHECK*
5	LH and RH Engine parameters checks:	

- Oil temperature: *90° – 110° C*
  (or 50° + 130 ° C, if MOD2006/002 is applied).
- CHT / CT: *50° – 135° / 120° C*
- Oil pressure: *2-5 bar (above 1400 RPM): 0.8 bar (below 1400 RPM)*
- Fuel pressure: *2.2 – 5.8 psi (0.15 - 0.40 bar)*
  **2.2 – 7.26 psi (0.15 – 0.50 bar)*

**applicable for fuel pump part no.893110 and no.893114*

6	LH and RH Generator lights	*CHECK BOTH OFF*
7	LH and RH Propeller Lever	*FULL FORWARD*
8	LH and RH Throttle Lever	*1650 RPM*
9	RH Ignitions switches	Set L / R / BOTH *(RPM drop with single ignition circuit selected must not exceed 130 prop's RPM; maximum RPM difference by use of either circuits LEFT or RIGHT cannot overcome 50 RPM)*
10	RH Propeller Lever	*GOVERNOR CHECK* *a) Reduce prop speed to 1200 RPM;* *b) move propeller lever back to full forward position;* *c) repeat a) and b) 3 times;* *d) verify that the governor closely and firmly controls the RPM;* *e) verify that 1650 prop RPM are restored with prop lever in full forward position.*

NOTE *Do not cause the propeller speed drop below 1150 RPM in any case.*

11	RH Carburettor heat	*ON, verify propeller RPM decreasing about 100 RPM*
12	RH Carburettor heat	*OFF*
13	RH engine instruments	*CHECK parameters if within green arcs*
14	LH Ignitions switches	Set L / R / BOTH *(RPM drop with single ignition circuit selected must not exceed 130 prop's RPM; maximum RPM difference by use of either circuits LEFT or RIGHT cannot overcome 50 RPM)*

15	LH Propeller Lever	*GOVERNOR CHECK* *a) Reduce prop speed to 1200 RPM;* *b) move propeller lever back to full forward position;* *c) repeat a) and b) 3 times;* *d) verify that the governor closely and firmly controls the RPM;* *e) verify that 1650 prop RPM are restored with prop lever in full forward position.*

NOTE *Do not cause the propeller speed drop below 1150 RPM in any case.*

16	LH Carburettor heat	*ON, verify propeller RPM decreasing about 100 RPM*
17	LH Carburettor heat	*OFF*
18	LH engine instruments	*CHECK parameters if within green arcs*
19	LH and RH Fuel quantity indicator	*CHECK consistent with fuel plan*
20	Flaps	*T/O or as required (see Section 5, Take OFF performances)*
21	Pitch trim and rudder trim	*SET neutral position*
22	Flight controls	*Check free*
23	Seat belts fastened and doors closed and locked	*CHECK*

3.8 LINE-UP

1	Parking Brake	*RELEASE, check full in*
2	Annunciator window	*CHECK cautions and warnings OFF*
3	RH Fuel Selector	*RIGHT*
4	LH Fuel Selector	*LEFT*
5	Pitot heat	*as required*
6	XPDR	*SET ALT*
7	Magnetic compass	*CHECK*
8	AHRS	*CROSS CHECK*

3.9 TAKEOFF AND CLIMB

1	Landing light	*ON*
2	LH and RH Electrical Fuel pump	*BOTH ON*
3	Carburettors heat	*CHECK OFF*
4	LH and RH Propeller Lever	*FULL FORWARD*
5	LH and RH Throttle Lever	*FULL POWER*
6	Engines instruments	*Parameters within green arcs*
7	Rotation speed	

MTOW 1180kg	MTOW 1230 kg
Vr = 64 KIAS	*Vr = 65 KIAS*

8	Apply brakes to stop wheel spinning	
9	Landing gear control knob	*UP: check green lights and TRANS light turned OFF within about 20"*
10	Landing and taxi lights	*OFF above 10000 ft*
11	LH and RH Propeller Lever	*Set max cont power at* safe altitude

CAU-TION

Max take off power must be limited to 5 minutes. Reduce Throttles MAP power before retracting Propeller to 2200 RPM or below.

12	LH and RH Electrical Fuel pump	*BOTH OFF*

NOTE

It is recommended to retract landing gear when a positive climb rate is ensured at the applicable best speed (V_Y or V_X as necessary).
It has been demonstrated that best climb rate is always obtained with flaps in UP position: refer to Section 5, "Take off rate of climb" and "Enroute rate of climb" tables.
Noteworthily best climb gradient speed (V_X)flaps UP is lower than best climb speed (V_X)flaps T/O up to 6000 ft (density altitude).Refer to Section 5, "Best climb gradient speed" table.

3.10 CRUISE

1 LH and RH Propeller Lever *SET to 1900-2250 RPM*

CAUTION

Throttles MAP decrease should be made before propeller speed reduction below 2200 RPM, as, contrariwise, Propeller Lever increase RPM should be set before engine Throttle Levers are advanced.

2 Engine parameters check (LH and RH)

- Oil temperature: *90° – 110° C*
  (or 50° - 130 ° C, if MOD2006/002 is applied).
- CHT/CT: *50° – 135° / 50° - 120° C*
- Oil pressure: *2 - 5 bar.*
- Fuel pressure: *2.2 – 5.8 psi*
  **2.2 – 7.26 psi (0.15 – 0.50 bar)*

**applicable for fuel pump part no.893110 and no.893114*

3 Carburettor heat as needed *(see also instructions addressed on Section 3.*

WARNING

Deselect and do not use Auto Pilot if possible icing condition area is inadvertently entered.

4 Fuel balance and crossfeed *check as necessary*

NOTE

To evaporate possibly accumulated condensation water, once per flight day (for approximately 5 minutes) 100° C (212° F) oil temperature must be reached.

3.11 TURBULENT AIR OPERATION

In keeping with good operating practice used in all aircraft, it is recommended that when turbulent air is encountered or expected, the airspeed be reduced to maneuvering speed to reduce the structural loads caused by gusts and to allow for inadvertent speed build-ups, which may occur as a result of the turbulence or of distractions caused by the conditions.

3.12 DESCENT AND APPROACH

1	Propellers	*As required*

NOTE *In order to control engine cooling and life, it is preferable to descend with power above idle and RPM lower than full continuous.*

2	Carburettors heat	*As required*
3	Altimeter setting	*QNH set and crosscheck*
4	Rear passengers seats	*Set at full aft position*

3.13 BEFORE LANDING

1	Rear passengers seats	*Seats set at full aft and lower position*
2	LH and RH Electrical Fuel pump	*BOTH ON*
3	On downwind leg:	*Flaps T/O*
4	Speed below applicable VLO/VLE	*Landing gear control knob - DOWN – Check green lights ON*
5	Carburettors heat	*CHECK OFF*
6	LH and RH Propeller Lever	*FULL FORWARD*
7	On final leg: speed below 93 KIAS	*Flaps FULL*
8	Final Approach Speed	
9	Landing and taxi light	*ON*
10	Touchdown speed	*65 KIAS*

MTOW 1180kg	MTOW 1230 kg
V_{FE}= 119KIAS	*V_{FE}=122KIAS*

MTOW 1180kg	MTOW 1230 kg
V_{APP}= 70KIAS	*V_{APP}=71KIAS*

3.14 BALKED LANDING/MISSED APPROACH

1	LH and RH Propeller Lever	*FULL FORWARD*
2	LH and RH Throttle Lever	*FULL POWER*

CAUTION

Propeller Lever increase to max RPM should be attained before engine Throttle Levers are advanced to max take off power. Max take off power must be limited to 5 minutes.

3	Flaps	*T/O*
4	Speed	*Keep over 62 KIAS, climb to V_Y or V_X as applicable*
5	Landing gear	*UP as positive climb is achieved*
6	Flaps	*UP*

NOTE

It is recommended to retract landing gear when a positive climb rate is ensured at the applicable best speed (V_Y or V_X as necessary).
It has been demonstrated that best climb rate is always obtained with flaps in UP position: refer to Section 5, "Take off rate of climb" and "Enroute rate of climb" tables.
Noteworthily best climb gradient speed (V_X)flaps UP is lower than best climb speed (V_X)flaps T/O up to 6000 ft (density altitude).Refer to Section 5, "Best climb gradient speed" table.

3.15 AFTER LANDING

1	LH and RH Electrical Fuel pump	*BOTH OFF*
2	Flaps	*0°*
3	Pitot Heat	*OFF*
4	Landing light	*OFF when required*

3.16 PARKING/SHUT DOWN

NOTE *It is always suggested to park the aircraft with the nose pointing into wind to improve cooling after shut down.*

1	Parking brake	*Engage*
2	Taxi light	*OFF*
3	Engines	*Allow for cooling down 1 minute at idle power*
4	Flaps	*Check UP*
5	Trims	*Check neutral*

NOTE *Ensure the engine is at its lowest possible idle speed before selecting ignitions off.*

6	Ignitions switches	*Turn OFF one at time*
7	LH and RH AVIONIC BUS	*OFF*
8	LH and RH CROSS BUS	*OFF*
9	LH/RH Field	*OFF*
10	All external lights switches	*OFF*
11	Master Switch	*OFF*
12	Emg Batt / Emg cockpit light / Emg ADI Switches	*Check OFF*

WARNING *Before disembarkation verify propellers are fully stopped.*

CAUTION *Instruct passengers to fully open pax door (against nacelle stop) and depart alongside aircraft fuselage, avoiding contact with hot / oily parts such as engine exhaust pipes, drainage tubes and wheel brakes, or sharp wing control surfaces edges.*

CAUTION *Crew should avoid propeller disc area crossing while proceeding alongside a fully opened pilot's door (up to 110°).*

3.17 POSTFLIGHT CHECKS

1	Protective cover for Pitot tubes, stall warning and static port plugs.	*Install*
2	Lock one control wheel with safety belt.	
3	Wheel chocks	*Place under MLG*
4	Aileron lock	*Place and tighten*
5	Pilot and passengers doors.	*Close and latch*

4. ADDITIONAL GUIDANCE FOR RNAV

Experience of RNAV systems, and Flight FMS in general, has identified the pitfalls of way-point entry error at the receiver as well as inaccuracies and errors in the database itself.

Research and experience have both shown that human error, often the result of a lack of familiarity with the airborne equipment, represents the major hazard in operations using RNAV systems. Therefore, it is imperative that pilots understand their system thoroughly and are able to determine whether it is safe to proceed.

This requires robust procedures, which check for possible errors in the computer database, monitor continued performance of the RNAV systems and enable pilots to identify and avoid not only their own mistakes but also errors in the information presented to them.

Flight planning on RNAV routes should include the following recommendation.

- During the pre-flight planning phase, given a GPS constellation of 23 satellites or less (22 or less for GPS stand-alone equipment that incorporate pressure altitude aiding), the availability of GPS integrity (RAIM) should be confirmed for the intended flight (route and time). This should be obtained from a prediction program either ground-based, or provided as an equipment function, or from an alternative method acceptable to the Authority;
- Where a navigation data base is installed, the data base validity (current AIRAC cycle) should be checked before flight;
- Traditional navigation equipment (e.g. VOR, DME and ADF) should be selected to available aids so as to allow immediate cross-checking or reversion in the event of loss of GPS navigation capability.

1) Pre-flight Planning

During the pre-flight planning phase, the availability of the navigation infrastructure, required for the intended operation, including any non-RNAV contingencies, must be confirmed for the period of intended operation. Availability of the onboard navigation equipment necessary for the route to be flown must be confirmed. The onboard navigation database must be appropriate for the region of intended operation and must include the navigation aids, waypoints, and coded terminal airspace procedures for the departure, arrival and alternate airfields.

Where the responsible airspace authority has specified in the AIP that dual PRNAV systems are required for specific terminal P-RNAV procedure, the availability of dual P-RNAV systems must be confirmed. This typically will apply where procedures are effective below the applicable minimum obstacle clearance altitude or where radar coverage is inadequate for the purposes of supporting P-RNAV. This will also take into account the particular hazards of a terminal area and the feasibility of contingency procedures following loss of P-RNAV capability.

RAIM availability must be confirmed with account taken of the latest information

2) Departure

At system initialisation, the flight crew must confirm that the navigation database is current and verify that the aircraft position has been entered correctly. The active flight plan should be checked by comparing the charts, SID or other applicable documents, with the map display. This includes confirmation of the waypoint sequence, reasonableness of track angles and distances, any altitude or speed constraints, and, where possible, which waypoints are fly-by and which are fly-over. If required by a procedure, a check will need to be made to confirm that updating will use a specific navigation aid(s), or to confirm exclusion of a specific navigation aid. A procedure shall not be used if doubt exists as to the validity of the procedure in the navigation database

The creation of new waypoints by manual entry into the RNAV system by the flight crew is not permitted as it would invalidate the affected P-RNAV procedure.

Route modifications in the terminal area may take the form of radar headings or 'direct to' clearances and the flight crew must be capable of reacting in a timely fashion. This may include the insertion in the flight plan of waypoints loaded from the database.

During the procedure and where feasible, flight progress should be monitored for navigational reasonableness, by cross-checks, with conventional navigation aids using the primary display

3) Arrival

Prior to the arrival phase, the flight crew should verify that the correct terminal procedure has been loaded. The active flight plan should be checked by comparing the charts with the map display. This includes confirmation of the waypoint sequence, reasonableness of track angles and distances, any altitude or speed constraints, and, where possible, which waypoints are fly-by and which are fly-over. If required by a procedure, a check will need to be made to confirm that updating will exclude a particular navigation aid. A procedure shall not be used if doubt exists as to the validity of the procedure in the navigation database.

Note: as a minimum, the arrival checks could be a simple inspection of a suitable map display that achieves the objectives of this paragraph.

The creation of new waypoints by manual entry into the RNAV system by the flight crew would invalidate the P-RNAV procedure and is not permitted.

Where the contingency to revert to a conventional arrival procedure is required, the flight crew must make the necessary preparation.

During the procedure and where feasible, flight progress should be monitored for navigational reasonableness by cross-checks with conventional navigation aids using the primary display

Route modifications in the terminal area may take the form of radar headings or 'direct to' clearances and the flight crew must be capable of reacting in a timely fashion.

Although a particular method is not mandated, any published altitude and speed constraints must be observed.

In the event that either the GPS or the EGNOS signal is not available at the destination, by the nature of the system, and its susceptibility to interference, there exists the possibility that it will also be unavailable over a wide area. Therefore, it is probable that the signal will also be unavailable at a nearby diversion aerodrome.

Notwithstanding any normal operational requirements for the identification of an alternate aerodrome, where a RNAV approach is to be flown in conditions where a visual approach will not be possible; pilots should always ensure that either:

1) A different type of approach system is available at the destination, not dependent on GPS data and for which the weather is forecast to be suitable to enable a landing to be made from that approach, or;
2) There is at least one alternate destination within range, where a different type of approach system is available, which is not dependent on GPS data and for which the weather is forecast to be suitable to enable a landing to be made from that approach.

4.1 APPROACH APPLICATIONS

NOTE

When GPS is not approved for the selected final approach course, the message "NOT APPROVED FOR GPS" is displayed. GPS provides guidance for the approach, but the HIS must be switched to a NAV receiver to fly the final course of the approach

NOTE

If certain GPS parameters (SBAS, RAIM, etc.) are not available, some published approach procedures for the desired airport may not be displayed in the list of available approaches.

An Approach Procedure (APPR) can be loaded at any airport that has one available, and provides guidance for non-precision and precision approaches to airports with published instrument approach procedures.

NOTE

Only one approach can be loaded at a time in a flight plan. If an approach is loaded when another approach is already in the active flight plan, the new approach replaces the previous approach. The route is defined by selection of an approach and the transition waypoints.

Whenever an approach is selected, the choice to either "load" or "activate" is given. "Loading" adds the approach to the end of the flight plan without immediately using it for navigation guidance. This allows continued navigation via the intermediate waypoints in the original flight plan, but keeps the procedure available on the Active Flight Plan Page for quick activation when needed. "Activating" also adds the procedure to the end of the flight plan but immediately begins to provide guidance to the first waypoint in the approach.

When selecting an approach, a "GPS" designation to the right of the procedure name indicates the procedure can be flown using the GPS receiver. Some procedures do not have

this designation, meaning the GPS receiver can be used for supplemental navigation guidance only.

NOTE

If the GPS receiver cannot be used for primary guidance, the appropriate navigation receiver must be used for the selected approach (e.g., VOR or ILS). The final course segment of ILS approaches, for example, must be flown by tuning the NAV receiver to the proper frequency and selecting that NAV receiver on the CDI

The G1000 SBAS GPS allows for flying LNAV and LPV approach service levels according to the published chart.

A sample of how the active approach service level is annunciated on the HSI is shown in the following table:

HSI Annunciation	Description	Example on HSI
LNAV	RNAV GPS approach using published LNAV minima	***Approach Service Level***
LPV (available only if SBAS available)	RNAV GPS approach using published LPV minima	

Before reaching the IAF, the flight crew should verify that the correct procedure has been loaded into the receiver's route or flight plan. A comparison with the approach chart should be made including the following:

- The waypoint sequence.
- Reasonableness of the tracks and distances of the approach legs, accuracy of the inbound course and mileage of the FAS.
- Verify from the charts, map display or CDU, which waypoints are fly-by and which are fly-over.
- Check any map display to ensure the track lines actually 'fly-over' or 'fly-by' the respective waypoints in the procedure.

By the time the aircraft reaches the IAF the pilot should have completed the above and been cleared for the approach. Also, the approach must have been activated in the receiver at least by this time.

Approach Applications which are classified as RNP Approach (APCH) in accordance with ICAO Doc 9613 Performance Based Navigation (PBN) Manual (and ICAO state Letter SP65/4-10/53) give access to minima (on an instrument approach procedure) designated as:

LNAV (Lateral Navigation)

This is a Non-Precision or 2D Approach with Lateral only navigation guidance provided by GNSS and an Aircraft Based Augmentation System (ABAS). Receiver Autonomous Integrity Monitoring (RAIM) is a form of ABAS. Lateral guidance is linear with accuracy to within +/- 0.3 NM parallel to either side of the final approach track.

LPV (Localiser Performance with Vertical Guidance)

This is an Approach Procedure with Vertical Guidance. The Lateral and Vertical guidance is provided by GPS and SBAS. Lateral and vertical guidance are angular with increasing sensitivity as the aircraft progresses down the final approach track; much like an ILS indication. LPV approach and annunciation on HSI is available only is SBAS available.

CAUTION

Before selecting a LPV approach, make sure SBAS is indicated ACTIVE in the GPS status box on AUX-GPS STATUS page on MFD.

If DISABLED highlight the appropriate SBAS SELECTION Box under SBAS softkey under AUX-GPS Status Page on MFD

NOTE

Should SBAS signal be lost, augmentation is lost. It may be possible to continue with LNAV only but this is reliant on the availability of RAIM.

NOTE: The instrument approach procedures associated with RNP APCH are entitled RNAV (GNSS) to reflect that GNSS is the primary navigation system. With the inherent onboard performance monitoring and alerting provided by GNSS, the navigation specification qualifies as RNP, however these procedures pre-date PBN, so the chart name has remained as RNAV.

Missed approach procedures

Before commencing an RNAV (GNSS) missed approach, a MAP should be possible without reference to GPS derived navigation so that, in the event of a loss of GPS accuracy or loss of integrity during the approach, a safe return to above Minimum Sector Altitude can be made.

This may be possible by dead reckoning (DR) navigation but where this is not possible and the MAP requires reference to terrestrial navigation aids, these must be available, tuned and correctly identified before passing the IAF and remain available throughout the approach.

Reasons for a missed approach are many and if GPS information remains available for the MAP, the pilot must be able to sequence the system correctly past the MAP, in order to follow the published MAP correctly.

Pilots should be fully competent in the necessary selection routines required by their own equipment, in order to transition to the MAP and preserve accurate navigation throughout.

When GPS navigation is NOT available for the MAP, it may be necessary to reset the display function of the HSI/CDI to disengage GPS information and regain VOR/LOC display. Pilots must be fully conversant with navigation display selections in order safely to follow the MAP.

Abnormal procedures for approaches

As the aircraft approaches the FAF (LNAV Only, without SBAS), the receiver automatically perform a final RAIM prediction for the approach. The receiver will not enter the approach mode if this RAIM prediction is negative. In this case, the approach should be discontinued.

However, this RAIM check assumes availability of the full constellation and will not take account of scheduled interruptions or failures. This can lead to a successful RAIM prediction at this point when the RAIM function itself is not available.

If RAIM is lost after passing the FAF the equipment should continue to provide navigation, where possible for five minutes, before giving a RAIM loss indication and this should be enough to complete the approach.

Should RAIM detect an out of tolerance situation, a warning will be given and a missed approach should be initiated immediately

The approach should always be discontinued:

(a) If the receiver fails to engage the correct approach mode or;
(b) In case of Loss Of Integrity (LOI) monitoring or;
(c) Whenever the HSI/CDI indication (or GP indication where applicable) exceeds half scale displacement or;
(d) If a RAIM (or equivalent) warning is activated or;
(e) If RAIM (or equivalent) function is not available and annunciated before passing the FAF.

4.2 PBN (RNAV & RNP) OPERATIONAL ELIGIBILITY

The Garmin GNSS navigation system as installed in this airplane is approved for navigation using GPS and SBAS (within the coverage of a Satellite Based Augmentation System complying with ICAO Annex 10) for IFR en- route, terminal area, precision and non-precision approach operations.

Both GNSS receivers are required to be operating and receiving usable signals except for routes requiring only one Long Range Navigation sensor.

The G1000 System has been shown to be eligible for:

- B-RNAV (RNAV-5)
- RNAV1 / P-RNAV (RNP-1) Enroute and Terminal navigation
- RNP APCH LNAV (d oes not include APV BARO-VNAV operation which is not cleared)
- LPV with SBAS

provided that the G1000 is receiving usable navigation information from at least one GPS receiver.

5. GROUND TOWING, PARKING AND MOORING

5.1 TOWING

CAUTION

When the a/c is moved on the ground, the Master Switch must be turned ON until the a/c is parked.

To tow the aircraft it is necessary to use a metal stiff bar connected to the nose gear.

WARNING

Do not turn nose wheel above 20° either side of center: greater steering angles can damage the wheel stop. The tow bar must be removed before engines starting.

5.2 PARKING

General

Under normal weather conditions, the airplane may be parked and headed in a direction that will facilitate servicing without regard to prevailing winds. Ensure that it is sufficiently protected against adverse weather conditions and present no danger to other aircraft.

Procedure

1. Position airplane on levelled surface, headed into the prevailing wind, if practical.
2. Engage parking brake and install control locks
3. Secure pilot control wheel by wrapping the seat belt around it.

NOTE:

Do not engage the parking brakes at low ambient temperature; accumulation of moisture may cause the brakes to freeze. In this case use wheel chocks.

In case of long time parking or overnight parking, it is recommended to moor the a/c as shown on Para. 4.3.

CAUTION

Mooring is strongly recommended when the wind is more than 15 knots and the a/c is completely refuelled.

5.3 MOORING

The aircraft is moored to insure its immovability, protection, and security under various weather conditions.

CAUTION

Mooring is strongly recommended when the wind is more than 15 knots and the a/c is completely refuelled.

Procedure

1. Position airplane on levelled surface and headed into the prevailing wind.
2. Center nose wheel, engage parking brake and/or use the wheel chocks.

NOTE: *Do not engage the parking brakes at low ambient temperature; accumulation of moisture may cause the brakes to freeze. In this case use wheel chocks.*

3. Secure pilot control wheel by wrapping the seat belt around it
4. Assure flaps are retracted
5. Electrically ground airplane, by connecting ground cable to the engine muffle
6. Install control locks and protective plugs.
7. Close and lock cabin doors.
8. Secure tie-down cables to the nose gear leg (in correspondence of the wheel fork) and to the wings and tail cone tie-down rings at approximately 45 degree with respect to the ground. (Refer to following figures)

NOTE: *Additional preparation for high winds includes tie-down ropes from the main landing gear forks employment.*

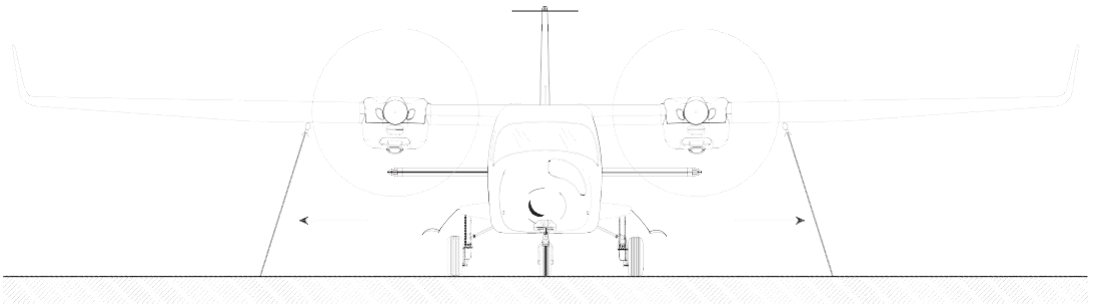

Mooring – front view

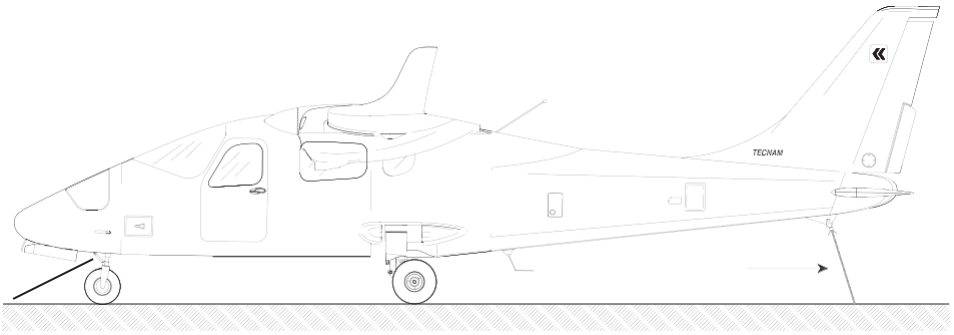

Mooring – side view

INTENTIONALLY LEFT BLANK

Supplement G19: pages replacement instructions

SECTION 5 - PERFORMANCES

Apply following instruction:

Supplement G19 – PERFORMANCES pages replace basic AFM Section 5 as a whole.

INTENTIONALLY LEFT BLANK

SECTION 5 - PERFORMANCES

INDEX

1. Introduction 1
2. Use of performances charts 2
3. Airspeed indicator system calibration 3
4. ICAO Standard Atmosphere 4
5. Stall speed 5
6. Crosswind 6
7. Takeoff performances 7
8. Take-off Rate of Climb at V_y 10
9. Take-off Rate of Climb at V_x 11
10. Enroute Rate of Climb at V_y 12
11. Enroute Rate of Climb at V_x 13
12. One-Engine Rate of Climb at V_{ySE} 14
13. One-Engine Rate of Climb at V_{xSE} 15
14. Cruise performances 16
15. Landing performances 19
16. Balked landing climb gradient 22
17. Noise data 22

1. INTRODUCTION

This section provides all necessary data for an accurate and comprehensive planning of flight activity from takeoff to landing.

Data reported in graphs and/or in tables were determined using:

- "Flight Test Data" under conditions prescribed by EASA CS-23 regulation
- aircraft and engine in good condition
- average piloting techniques

Each graph or table was determined according to ICAO Standard Atmosphere (ISA - s.l.); evaluations of the impact on performances were carried out by theoretical means for:

airspeed
external temperature
altitude
weight
runway type and condition

2. USE OF PERFORMANCES CHARTS

Performances data are presented in tabular or graphical form to illustrate the effect of different variables such as altitude, temperature and weight. Given information is sufficient to plan the mission with required precision and safety.

Additional information is provided for each table or graph.

3. AIRSPEED INDICATOR SYSTEM CALIBRATION

Graph shows calibrated airspeed V_{CAS} as a function of indicated airspeed V_{IAS}.

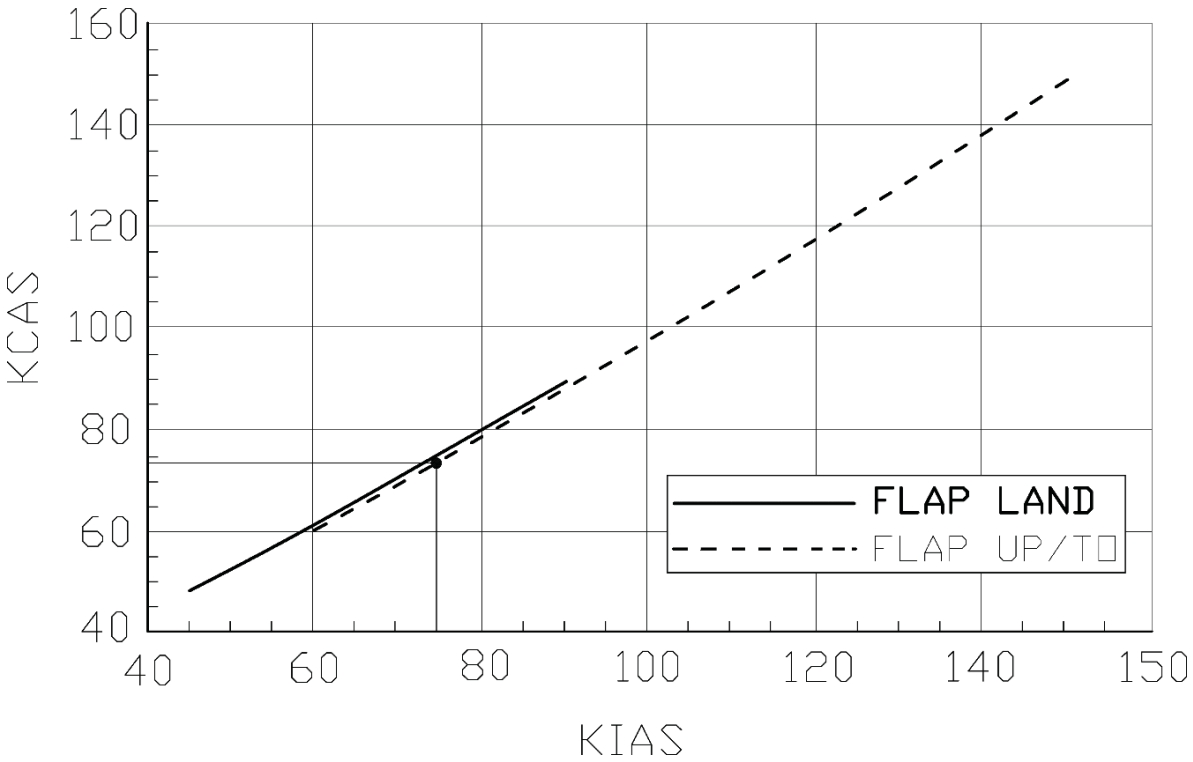

Figure 1 - IAS/CAS chart

Example:

Given	***Find***
KIAS *75*	KCAS *74*

4. ICAO STANDARD ATMOSPHERE

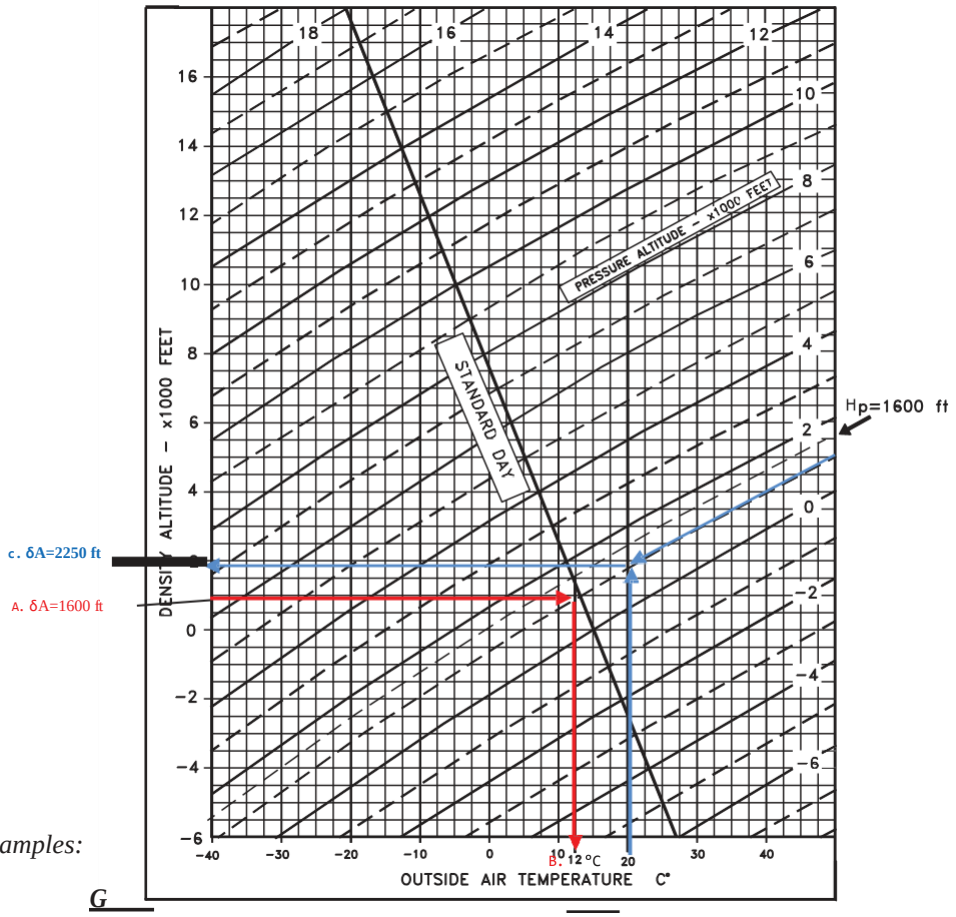

Examples:

G

a. Temperature = 20°C

b. Pressure altitude = 1600'

→ c. Corresponding Density Altitude = 2250'

Given

A. Pressure altitude = 1600'

ISA condition

→ ***Find***

B. ISA Air Temperature = 12°C

5. STALL SPEED

Weight: *1230 kg (2712 lb)*
Throttle Levers: *IDLE*
Landing Gear: *Down*
CG: *Most Forward (16.5%)*
No ground effect

WEIGHT	BANK ANGLE	STALL SPEED					
		FLAPS 0°		FLAPS T/O		FLAPS FULL	
[kg]	[deg]	KIAS	KCAS	KIAS	KCAS	KIAS	KCAS
1230 (FWD C.G.)	0	66	65	59	57	54	55
	15	67	66	58	58	55	56
	30	71	70	61	61	59	59
	45	79	78	68	68	65	65
	60	95	93	83	81	79	78

NOTE *Altitude loss during conventional stall recovery, as demonstrated during flight tests is approximately 250 ft with banking below 30°.*

6. CROSSWIND

Maximum demonstrated crosswind is 17 Kts

=:: Example:

Given	***Find***
Wind direction (*with respect to aircraft longitudinal axis*) = 30°	Headwind = 17.5 Kts
Wind speed = 20 Kts	Crosswind = 10 Kts

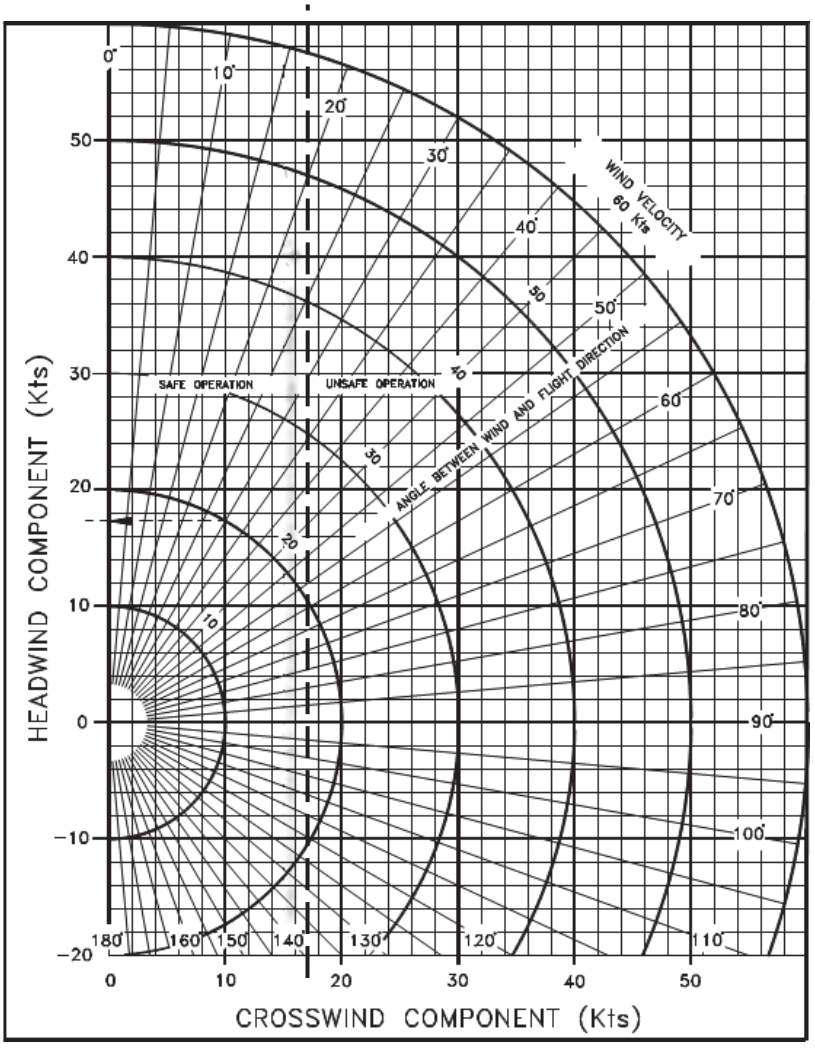

Figure 3 – Crosswind diagram

7. TAKEOFF PERFORMANCES

Weight = *1230 kg (2712 lb)*

Flaps: *T/O*
Speed at Lift-Off = *65 KIAS*
Speed Over *50ft* Obstacle = *70 KIAS*
Throttle Levers: *Full Forward*
Runway: *Grass*

Corrections
Headwind: - 2.5m for each kt (*8 ft/kt*)
Tailwind: + 10m for each kt (*33ft/kt*)
Paved Runway: - *6%* to Ground Roll
Runway slope: + 5% to Ground Roll for each +1%

Pressure Altitude [ft]		Distance [m]				
		Temperature [°C]				ISA
		-25	0	25	50	
S.L.	Ground Roll	207	263	328	401	**301**
	At 50 ft AGL	271	345	429	525	**394**
1000	Ground Roll	231	294	366	447	**330**
	At 50 ft AGL	303	385	479	586	**432**
2000	Ground Roll	258	328	409	500	**362**
	At 50 ft AGL	338	430	535	654	**474**
3000	Ground Roll	289	367	457	559	**398**
	At 50 ft AGL	378	480	598	731	**521**
4000	Ground Roll	323	411	511	625	**438**
	At 50 ft AGL	423	537	669	818	**573**
5000	Ground Roll	362	460	572	700	**481**
	At 50 ft AGL	473	602	749	916	**630**
6000	Ground Roll	405	515	642	785	**530**
	At 50 ft AGL	531	675	840	1027	**694**
7000	Ground Roll	455	578	720	880	**584**
	At 50 ft AGL	595	757	942	1152	**765**
8000	Ground Roll	511	650	809	989	**645**
	At 50 ft AGL	669	850	1059	1295	**844**
9000	Ground Roll	575	730	909	1112	**712**
	At 50 ft AGL	752	956	1190	1456	**932**
10000	Ground Roll	647	822	1023	1252	**786**
	At 50 ft AGL	847	1076	1340	1638	**1029**

Weight = *1080 kg (2381 lb)*

Flaps: *T/O*
Speed at Lift-Off = *65 KIAS*
Speed Over *50ft* Obstacle = *70 KIAS*
Throttle Levers: *Full Forward*
Runway: *Grass*

Corrections
Headwind: - 2.5m for each kt (*8 ft/kt*)
Tailwind: + 10m for each kt (*33ft/kt*)
Paved Runway: - *6%* to Ground Roll
Runway slope: + 5% to Ground Roll for each +1%

Pressure Altitude [ft]		Distance [m]				
		Temperature [°C]				ISA
		-25	0	25	50	
S.L.	Ground Roll	148	188	234	286	**215**
	At 50 ft AGL	193	246	306	374	**281**
1000	Ground Roll	165	210	261	319	**235**
	At 50 ft AGL	216	274	341	418	**308**
2000	Ground Roll	184	234	291	356	**258**
	At 50 ft AGL	241	306	381	466	**338**
3000	Ground Roll	206	262	326	398	**284**
	At 50 ft AGL	269	342	426	521	**372**
4000	Ground Roll	230	293	364	446	**312**
	At 50 ft AGL	301	383	477	583	**409**
5000	Ground Roll	258	328	408	499	**343**
	At 50 ft AGL	338	429	534	653	**449**
6000	Ground Roll	289	368	457	559	**378**
	At 50 ft AGL	378	481	599	732	**495**
7000	Ground Roll	324	412	513	628	**417**
	At 50 ft AGL	425	540	672	822	**545**
8000	Ground Roll	364	463	577	705	**460**
	At 50 ft AGL	477	606	755	923	**602**
9000	Ground Roll	410	521	648	793	**508**
	At 50 ft AGL	536	682	849	1038	**664**
10000	Ground Roll	461	586	730	893	**561**
	At 50 ft AGL	604	767	955	1168	**734**

Weight = *930 kg (2051 lb)*

Flaps: *T/O*
Speed at Lift-Off = *65 KIAS*
Speed Over *50ft* Obstacle = *70 KIAS*
Throttle Levers: *Full Forward*
Runway: *Grass*

Corrections

Headwind: - 2.5m for each kt (*8 ft/kt*)
Tailwind: + 10m for each kt (*33ft/kt*)
Paved Runway: - *6%* to Ground Roll
Runway slope: + 5% to Ground Roll for each +1%

Pressure Altitude [ft]		Distance [m]				
		Temperature [°C]				ISA
		-25	0	25	50	
S.L.	Ground Roll	100	127	158	194	**146**
	At 50 ft AGL	131	167	207	254	**190**
1000	Ground Roll	112	142	177	216	**160**
	At 50 ft AGL	146	186	231	283	**209**
2000	Ground Roll	125	159	197	242	**175**
	At 50 ft AGL	163	208	258	316	**229**
3000	Ground Roll	140	177	221	270	**192**
	At 50 ft AGL	183	232	289	353	**252**
4000	Ground Roll	156	198	247	302	**212**
	At 50 ft AGL	204	260	323	395	**277**
5000	Ground Roll	175	222	277	338	**233**
	At 50 ft AGL	229	291	362	443	**305**
6000	Ground Roll	196	249	310	379	**256**
	At 50 ft AGL	257	326	406	496	**335**
7000	Ground Roll	220	280	348	426	**282**
	At 50 ft AGL	288	366	455	557	**370**
8000	Ground Roll	247	314	391	478	**312**
	At 50 ft AGL	323	411	512	626	**408**
9000	Ground Roll	278	353	440	538	**344**
	At 50 ft AGL	364	462	575	704	**450**
10000	Ground Roll	313	397	495	605	**380**
	At 50 ft AGL	409	520	648	792	**498**

8. Take-off Rate of Climb at V_Y

Power Setting: Maximum Continuous Power
Flaps: Take-Off
Landing Gear: up

Weight [kg]	Pressure Altitude [ft]	Climb Speed V_Y [KIAS]	Rate of Climb [ft/min] Temperature [°C] -25	0	25	50	ISA
1230	S.L.	86	1276	1088	920	768	985
	2000	83	1133	948	783	634	873
	4000	79	990	809	646	500	761
	6000	76	848	670	510	366	649
	8000	73	707	531	374	233	537
	10000	70	565	393	239	100	425
	12000	67	425	256	104	-32	313
	14000	64	285	118	-30	-164	201
1080	S.L.	85	1507	1302	1119	954	1190
	2000	82	1351	1150	970	808	1068
	4000	79	1196	998	822	662	946
	6000	76	1041	847	674	517	825
	8000	73	887	696	526	372	703
	10000	69	734	546	379	228	581
	12000	66	581	397	232	84	459
	14000	63	428	248	86	-59	338
930	S.L.	85	1803	1575	1372	1189	1451
	2000	82	1630	1406	1206	1026	1315
	4000	79	1457	1238	1041	864	1180
	6000	75	1286	1070	877	703	1045
	8000	72	1114	902	713	542	909
	10000	69	944	735	549	382	774
	12000	65	774	569	387	222	639
	14000	62	604	404	224	63	503

9. Take-off Rate of Climb at V_x

Power Setting: Maximum Continuous Power
Flaps: Take-Off
Landing Gear: p/p

Weight	Pressure Altitude	Climb Speed V_x	Rate of Climb at V_x [ft/min]				
			Temperature [°C]				ISA
[kg]	[ft]	[KIAS]	-25	0	25	50	
1230	S.L.	78	1214	1037	880	738	941
	1000	76	1147	972	816	675	888
	2000	75	1080	906	751	612	836
	3000	74	1013	841	687	549	783
	4000	73	946	776	623	486	731
	5000	72	879	710	560	424	678
	6000	71	813	645	496	361	626
	7000	70	746	580	432	299	574
1080	S.L.	78	1283	1102	940	794	1002
	1000	76	1214	1034	874	729	949
	2000	75	1145	967	808	664	895
	3000	74	1076	900	742	600	841
	4000	73	1008	833	676	535	787
	5000	72	939	766	611	471	733
	6000	71	871	699	545	407	679
	7000	70	803	632	480	342	625
930	S.L.	78	1435	1243	1072	918	1138
	1000	76	1362	1172	1002	849	1081
	2000	75	1289	1101	932	780	1024
	3000	74	1216	1030	863	712	967
	4000	73	1144	958	793	644	910
	5000	72	1071	888	724	576	853
	6000	71	999	817	654	508	796
	7000	69	927	746	585	440	739

10. ENROUTE RATE OF CLIMB AT V_Y

Power Setting: Maximum Continuous Power
Flaps: Up
Landing Gear: up

Weight	Pressure Altitude	Climb Speed V_Y	Rate of Climb [ft/min]				
			Temperature [°C]				ISA
[kg]	[ft]	[KIAS]	-25	0	25	50	
1230	S.L.	84	1317	1135	973	827	1036
	2000	83	1179	1000	841	697	928
	4000	81	1041	865	709	568	819
	6000	80	904	731	577	439	711
	8000	78	767	598	446	310	603
	10000	77	631	464	316	182	495
	12000	75	495	332	186	54	387
	14000	73	360	199	56	-73	279
1080	S.L.	83	1560	1360	1182	1022	1251
	2000	82	1408	1212	1037	879	1132
	4000	80	1257	1064	892	737	1014
	6000	78	1106	917	748	595	895
	8000	76	956	770	604	454	776
	10000	74	807	624	461	314	658
	12000	72	657	478	318	173	539
	14000	70	509	333	175	34	420
930	S.L.	82	1873	1649	1449	1269	1527
	2000	81	1703	1483	1286	1109	1393
	4000	79	1533	1317	1124	950	1260
	6000	77	1364	1151	962	791	1127
	8000	75	1196	987	800	632	994
	10000	73	1028	823	639	474	861
	12000	71	860	659	479	317	727
	14000	69	693	496	319	160	594

11. ENROUTE RATE OF CLIMB AT V_x

Power Setting: Maximum Continuous Power
Flaps: Up
Landing Gear: up

Weight	Pressure Altitude	Climb Speed V_x	Rate of Climb at V_x [ft/min]				
			Temperature [°C]				ISA
[kg]	[ft]	[KIAS]	-25	0	25	50	
1230	S.L.	72	1241	1073	924	789	982
	1000	72	1177	1011	863	729	932
	2000	72	1114	949	802	669	882
	3000	72	1050	887	741	609	832
	4000	72	986	825	680	550	782
	5000	72	923	763	619	490	732
	6000	71	860	701	559	431	682
	7000	71	797	639	498	371	632
1080	S.L.	72	1480	1295	1130	981	1194
	1000	72	1410	1226	1062	915	1139
	2000	72	1340	1158	995	848	1084
	3000	72	1269	1089	928	782	1029
	4000	71	1199	1020	861	717	973
	5000	71	1129	952	794	651	918
	6000	71	1059	884	727	585	863
	7000	71	990	815	660	520	808
930	S.L.	72	1787	1578	1391	1223	1463
	1000	72	1707	1500	1315	1148	1401
	2000	71	1628	1422	1239	1074	1339
	3000	71	1549	1345	1163	999	1277
	4000	71	1470	1268	1087	925	1215
	5000	71	1391	1190	1012	851	1153
	6000	71	1312	1113	936	777	1090
	7000	70	1233	1036	861	703	1028

12. ONE-ENGINE RATE OF CLIMB AT V_{YSE}

Power Setting: Maximum Continuous Power (operative engine)
propeller feathered (inoperative engine)
Flaps: Up
Landing Gear: Up

Weight	Pressure Altitude	Climb Speed V_{YSE}	Rate of Climb [ft/min]				
			Temperature [°C]				ISA
[kg]	[ft]	[KIAS]	-25	0	25	50	
1230	S.L.	84	330	230	142	62	176
	1000	83	292	193	106	26	147
	2000	82	254	157	69	-9	117
	3000	81	216	120	33	-44	87
	4000	80	179	83	-3	-80	58
	5000	79	141	46	-38	-115	28
	6000	79	104	10	-74	-150	-1
	7000	78	67	-27	-110	-185	-31
1080	S.L.	80	436	330	235	149	271
	1000	80	396	290	196	111	240
	2000	79	355	251	157	73	208
	3000	79	315	211	118	35	176
	4000	79	275	172	80	-3	145
	5000	79	234	132	41	-41	113
	6000	78	194	93	3	-78	81
	7000	78	154	54	-35	-116	50
930	S.L.	79	574	455	349	253	390
	1000	79	529	411	305	211	355
	2000	79	483	367	262	168	319
	3000	78	438	322	219	126	284
	4000	78	393	278	176	83	248
	5000	78	348	235	133	41	213
	6000	78	304	191	90	-1	178
	7000	77	259	147	47	-43	142

13. ONE-ENGINE RATE OF CLIMB AT V_{xSE}

Power Setting: Maximum Continuous Power (operative engine)
propeller feathered (inoperative engine)
Flaps: Up
Landing Gear: Up

Weight	Pressure Altitude	Climb Speed V_{xSE}	Rate of Climb at V_{xSE} [ft/min]				
			Temperature [°C]				ISA
[kg]	[ft]	[KIAS]	-25	0	25	50	
1230	S.L.	83	325	227	140	61	174
	1000	82	288	191	104	26	145
	2000	81	251	155	69	-9	116
	3000	81	214	118	33	-44	86
	4000	80	177	82	-2	-78	57
	5000	79	140	46	-38	-113	28
	6000	78	103	10	-73	-148	-1
	7000	77	66	-26	-108	-183	-30
1080	S.L.	79	424	321	229	147	265
	1000	79	385	283	192	110	234
	2000	79	346	245	155	73	204
	3000	79	307	207	117	37	173
	4000	79	268	169	80	0	143
	5000	78	229	131	43	-36	112
	6000	78	190	93	6	-73	81
	7000	78	152	55	-31	-109	51
930	S.L.	78	556	442	341	249	380
	1000	78	513	400	299	209	346
	2000	78	469	358	258	168	312
	3000	78	426	316	217	128	279
	4000	78	383	274	176	87	245
	5000	78	340	232	134	47	211
	6000	77	298	190	93	7	177
	7000	77	255	148	52	-34	143

14. CRUISE PERFORMANCES

Weight: *1150 kg (2535 lb)*
Pressure Altitude: *0 ft*

RPM*	MAP [inHg]	ISA – 30°C (-15°C) PWR	KTAS	F.C.** [lt/hr]	ISA (15°C) PWR	KTAS	F.C.** [lt/hr]	ISA + 30°C (45°C) PWR	KTAS	F.C.** [lt/hr]
2250	**29.5**	103%	143	28.6	97%	145	27.1	92%	146	25.8
2250	**28**	88%	134	24.5	83%	136	23.2	79%	138	22
2250	**26**	69%	122	19.2	65%	124	18.2	62%	125	17.3
2250	**24**	59%	115	16.6	56%	116	15.7	53%	117	14.9
2250	**22**	46%	103	12.8	43%	103	12.1	41%	103	11.5
2250	**20**	39%	96	11	37%	95	10.4	35%	94	9.9
2100	**28**	84%	132	23.5	80%	134	22.2	76%	135	21.1
2100	**26**	66%	121	18.5	63%	122	17.5	60%	123	16.7
2100	**24**	57%	114	16	54%	114	15.1	52%	115	14.4
2100	**22**	43%	100	12.1	41%	100	11.5	39%	100	10.9
2100	**20**	37%	92	10.2	35%	91	9.7	33%	89	9.2
1900	**26**	61%	117	17.1	58%	118	16.2	55%	119	15.4
1900	**24**	53%	110	14.9	50%	111	14.1	48%	111	13.4
1900	**22**	41%	97	11.4	39%	97	10.8	37%	96	10.2
1900	**20**	35%	89	9.6	33%	88	9.1	31%	85	8.7

* *Propeller RPM*
** *Fuel Consumption for each Engine*

Weight: *1150 kg (2535 lb)*
Pressure Altitude: *3000ft*

RPM*	MAP [inHg]	ISA – 30°C (-21°C) PWR	KTAS	F.C.** [lt/hr]	ISA (9°C) PWR	TCAS	F.C.** [lt/hr]	ISA + 30°C (39°C) PWR	KTAS	F.C.** [lt/hr]
2388	**26.4**	92%	141	25.7	87%	143	24.3	83%	144	23.1
2250	**26.4**	89%	139	25	85%	141	23.6	80%	143	22.4
2250	**26**	85%	137	23.9	81%	138	22.6	77%	140	21.5
2250	**24**	72%	128	20	68%	129	18.9	64%	130	18
2250	**22**	57%	116	16	54%	117	15.1	51%	118	14.3
2250	**20**	48%	108	13.4	45%	108	12.7	43%	108	12.1
2100	**26.4**	85%	137	23.9	81%	138	22.6	77%	140	21.4
2100	**26**	82%	134	22.8	77%	136	21.6	73%	137	20.5
2100	**24**	69%	125	19.2	65%	127	18.1	62%	128	17.2
2100	**22**	54%	114	15.2	51%	114	14.3	49%	115	13.6
2100	**20**	45%	104	12.6	43%	104	11.9	41%	104	11.3
1900	**26.4**	78%	132	21.9	74%	134	20.7	70%	135	19.6
1900	**26**	75%	130	20.9	71%	131	19.8	67%	132	18.8
1900	**24**	63%	121	17.7	60%	122	16.7	57%	123	15.9
1900	**22**	50%	110	14.1	48%	110	13.3	45%	110	12.6
1900	**20**	42%	101	11.7	40%	101	11.1	38%	100	10.6

* *Propeller RPM*
** *Fuel Consumption for each Engine*

Weight: *1150 kg (2535 lb)*
Pressure Altitude: *6000ft*

RPM*	MAP [inHg]	ISA – 30°C (-27°C) PWR	KTAS	F.C.** [lt/hr]	ISA (3°C) PWR	KTAS	F.C.** [lt/hr]	ISA + 30°C (33°C) PWR	KTAS	F.C.** [lt/hr]
2388	**23.6**	83%	139	23.3	79%	141	22	75%	142	20.9
2250	**23.6**	81%	138	22.6	76%	139	21.4	73%	141	20.3
2250	**22**	68%	129	19.1	65%	130	18.1	61%	131	17.2
2250	**20**	57%	119	15.8	54%	120	14.9	51%	120	14.2
2250	**18**	46%	108	12.9	44%	108	12.2	41%	107	11.6
2100	**23.6**	77%	135	21.6	73%	137	20.4	69%	138	19.4
2100	**22**	65%	126	18.2	62%	127	17.2	59%	128	16.4
2100	**20**	54%	116	15	51%	116	14.1	48%	117	13.4
2100	**18**	44%	106	12.4	42%	106	11.7	40%	105	11.1
1900	**23.6**	71%	130	19.8	67%	132	18.7	64%	133	17.8
1900	**22**	60%	122	16.8	57%	123	15.8	54%	123	15
1900	**20**	50%	112	13.9	47%	112	13.1	44%	112	12.4
1900	**18**	41%	102	11.6	39%	102	10.9	37%	100	10.4

* *Propeller RPM*

** *Fuel Consumption for each Engine*

Weight: *1150 kg (2535 lb)*
Pressure Altitude: *9000ft*

RPM*	MAP [inHg]	ISA – 30°C (-33°C)			ISA (-3°C)			ISA + 30°C (27°C)		
		PWR	KTAS	F.C.** [lt/hr]	PWR	KTAS	F.C.** [lt/hr]	PWR	KTAS	F.C.** [lt/hr]
2388	**21.1**	75%	137	20.9	71%	139	19.7	67%	140	18.7
2250	**21.1**	73%	136	20.3	69%	137	19.2	65%	138	18.2
2250	**20**	65%	130	18.3	62%	131	17.2	58%	131	16.3
2250	**18**	53%	118	14.9	50%	119	14	48%	118	13.3
2100	**21.1**	69%	133	19.4	65%	134	18.3	62%	135	17.4
2100	**20**	62%	127	17.4	59%	128	16.4	56%	128	15.6
2100	**18**	51%	116	14.2	48%	116	13.4	46%	116	12.7
1900	**21.1**	64%	128	17.8	60%	129	16.8	57%	130	15.9
1900	**20**	57%	122	16	54%	123	15.1	51%	123	14.3
1900	**18**	47%	112	13.2	44%	112	12.4	42%	111	11.8

* *Propeller RPM*
** *Fuel Consumption for each Engine*

Weight: *1150 kg (2535 lb)*
Pressure Altitude: *12000 ft*

RPM*	MAP [inHg]	ISA – 30°C (-39°C)			ISA (-9°C)			ISA + 30°C (21°C)		
		PWR	KTAS	F.C.** [lt/hr]	PWR	KTAS	F.C.** [lt/hr]	PWR	KTAS	F.C.** [lt/hr]
2388	**18.8**	67%	135	18.8	63%	136	17.7	60%	136	16.7
2250	**18.8**	65%	133	18.2	61%	134	17.2	58%	134	16.3
2250	**18**	60%	129	16.8	57%	129	15.9	54%	129	15
2100	**18.8**	62%	130	17.4	59%	131	16.4	56%	132	15.5
2100	**18**	58%	126	16.1	54%	126	15.2	51%	126	14.4
1900	**18.8**	57%	125	15.9	54%	126	15	51%	126	14.2
1900	**18**	53%	121	14.8	50%	121	13.9	47%	121	13.2

* *Propeller RPM*
** *Fuel Consumption for each Engine*

15. LANDING PERFORMANCES

Weight = *1230 kg (2712 lb)*

Flaps: *LAND*
Short Final Approach Speed = *70 KIAS*
Throttle Levers: *Idle*
Runway: *Grass*

Corrections

Headwind: - 5m for each kt (*16 ft/kt*)
Tailwind: + 11m for each kt (*36ft/kt*)
Paved Runway: - *2%* to Ground Roll
Runway slope: - 2.5% to Ground Roll for each +1%

Pressure Altitude [ft]		Distance [m] Temperature [°C] -25	0	25	50	ISA
S.L.	Ground Roll	199	219	239	259	**231**
	At 50 ft AGL	308	334	359	384	**349**
1000	Ground Roll	206	227	248	269	**238**
	At 50 ft AGL	318	344	370	396	**358**
2000	Ground Roll	214	236	257	279	**245**
	At 50 ft AGL	328	355	382	408	**367**
3000	Ground Roll	222	244	267	289	**252**
	At 50 ft AGL	348	377	406	434	**385**
4000	Ground Roll	230	254	277	300	**260**
	At 50 ft AGL	348	377	406	434	**385**
5000	Ground Roll	239	263	287	311	**268**
	At 50 ft AGL	359	389	419	448	**395**
6000	Ground Roll	248	273	298	323	**276**
	At 50 ft AGL	371	402	432	463	**405**
7000	Ground Roll	258	284	310	336	**285**
	At 50 ft AGL	382	415	446	478	**416**
8000	Ground Roll	268	295	322	349	**294**
	At 50 ft AGL	395	428	461	494	**427**
9000	Ground Roll	278	306	334	362	**303**
	At 50 ft AGL	408	442	476	510	**438**
10000	Ground Roll	289	318	348	377	**313**
	At 50 ft AGL	421	457	492	527	**450**

Weight = *1080 kg (2381 lb)*

Flaps: *LAND*
Short Final Approach Speed = *70 KIAS*
Throttle Levers: *Idle*
Runway: *Grass*

Corrections

Headwind: - 5m for each kt (*16 ft/kt*)
Tailwind: + 11m for each kt (*36ft/kt*)
Paved Runway: - *2%* to Ground Roll
Runway slope: - 2.5% to Ground Roll for each +1%

Pressure Altitude [ft]		Distance [m]				
		Temperature [°C]				ISA
		-25	0	25	50	
S.L.	Ground Roll	175	192	210	227	**203**
	At 50 ft AGL	271	293	315	337	**306**
1000	Ground Roll	181	199	218	236	**209**
	At 50 ft AGL	279	302	325	348	**314**
2000	Ground Roll	188	207	226	245	**215**
	At 50 ft AGL	288	311	335	358	**322**
3000	Ground Roll	195	215	234	254	**222**
	At 50 ft AGL	306	331	356	381	**338**
4000	Ground Roll	202	223	243	263	**228**
	At 50 ft AGL	306	331	356	381	**338**
5000	Ground Roll	210	231	252	273	**235**
	At 50 ft AGL	315	342	368	394	**347**
6000	Ground Roll	218	240	262	284	**243**
	At 50 ft AGL	325	353	380	406	**356**
7000	Ground Roll	226	249	272	295	**250**
	At 50 ft AGL	336	364	392	420	**365**
8000	Ground Roll	235	259	283	306	**258**
	At 50 ft AGL	347	376	405	434	**375**
9000	Ground Roll	244	269	294	318	**266**
	At 50 ft AGL	358	388	418	448	**385**
10000	Ground Roll	254	280	305	331	**275**
	At 50 ft AGL	370	401	432	463	**395**

Weight = *930 kg (2051 lb)*

Flaps: *LAND*

Short Final Approach Speed = *70 KIAS*

Throttle Levers: *Idle*

Runway: *Grass*

Corrections

Headwind: - 5m for each kt (*16 ft/kt*)

Tailwind: + 11m for each kt (*36ft/kt*)

Paved Runway: - *2%* to Ground Roll

Runway slope: - 2.5% to Ground Roll for each +1%

Pressure Altitude [ft]		Distance [m]				
		Temperature [°C]				ISA
		-25	0	25	50	
S.L.	Ground Roll	150	166	181	196	**175**
	At 50 ft AGL	233	252	271	290	**264**
1000	Ground Roll	156	172	187	203	**180**
	At 50 ft AGL	240	260	280	299	**270**
2000	Ground Roll	162	178	194	211	**185**
	At 50 ft AGL	248	268	288	309	**277**
3000	Ground Roll	168	185	202	219	**191**
	At 50 ft AGL	263	285	307	328	**291**
4000	Ground Roll	174	192	209	227	**197**
	At 50 ft AGL	263	285	307	328	**291**
5000	Ground Roll	181	199	217	235	**203**
	At 50 ft AGL	272	294	317	339	**299**
6000	Ground Roll	188	207	226	244	**209**
	At 50 ft AGL	280	304	327	350	**307**
7000	Ground Roll	195	215	234	254	**215**
	At 50 ft AGL	289	313	338	361	**315**
8000	Ground Roll	203	223	243	264	**222**
	At 50 ft AGL	299	324	349	373	**323**
9000	Ground Roll	210	232	253	274	**229**
	At 50 ft AGL	308	334	360	386	**331**
10000	Ground Roll	219	241	263	285	**237**
	At 50 ft AGL	319	346	372	399	**340**

16. BALKED LANDING CLIMB GRADIENT

Flight conditions (ISA and SL):

Weight:	*1230 kg (2712 lb)*
Throttle levers	*Both FULL FORWARD*
Flaps	*T/O*
Landing gear	*DOWN*
Weight	*MTOW 1230kg (2712 lb)*
Speed	*72 KIAS*
Climb gradient	*9.4% (5.4°)*

17. NOISE DATA

Noise level, determined in accordance with ICAO/Annex 16 4th Ed., July 2005, Vol. I°, Chapter 10, is **72.82** dB(A).

Supplement G19: page replacement instructions

SECTION 6 - WEIGHT AND BALANCE

See Basic AFM – Section 6

INTENTIONALLY LEFT BLANK

Supplement G19: page replacement instructions

SECTION 7 - AIRFRAME and SYSTEMS DESCRIPTION

Apply following page replacement procedure:

Supplement G19 – AIRFRAME and SYSTEMS DESCRIPTION page		Basic AFM Section 7 page
S7-1 thru S7-2	**REPLACE**	7-1 thru 7-2
S7-16	**REPLACE**	7-16
S7-29 thru S7-42	**REPLACE**	7-29 thru 42

INTENTIONALLY LEFT BLANK

SECTION 7 – AIRFRAME and SYSTEMS DESCRIPTION

INDEX

1. INTRODUCTION 3
2. AIRFRAME 3
3. POWERPLANT 9
4. PEDESTAL CONTROLS 12
5. CABIN OVER-HEAD PANEL CONTROLS. 15
6. INTERNAL LIGHTS 16
7. EXTERNAL LIGHTS 17
8. FUEL SYSTEM 19
9. LANDING GEAR SYSTEM 21
10. BRAKES. 25
11. VENTILATION 26
12. CABIN HEAT 26
13. SEATS AND SAFETY BELTS 26
14. DOORS 27
15. BAGGAGE COMPARTMENT. 28
16. MD302 ALTERNATIVE STANDBY INSTRUMENT 29
17. PLACARDS 31
18. INSTRUMENTS PANEL 37
19. ELECTRICAL SYSTEM 39

INTENTIONALLY LEFT BLANK

6. INTERNAL LIGHTS

Internal lights systrem is composed by following equipment:

- **Map lights**, providing lighting for crew and passengers compartment
- **Switches lights**
- **Panel lights**
- **Cabin ambient lights**
- **Emergency light**

The **map lights** is two lights located on the overhead panel in correspondence of the crew seats in the ceiling, fitted with control switches.

The **Switches lights** are the lights located inside the switches of the instrument panel, their intensity of light is controlled by a dimmer.

The **Panel lights** are three lights located on the overhead instrument panel, their intensity of lights is controlled by a dimmer.

The **Cabin ambient** are three lights, located below the instrument panel, in particular one light on the left side of the pilot, one on the right side of the co-pilot, and the third light below the throttles.

The three dimmers are located on the RH side of instrument panels, below the MFD.

All above mentioned lights are supplied by the battery bus apart from the **Emergency light** which is directly connected to the battery. It is a five leds light located in the overhead panel controlled by a red switch installed on lower LH side of instrument panel, near “BCK BATTERY” switch.

16. MD302 ALTERNATIVE STAND-BY INSTRUMENT

In order to improve the digital version cockpit layout of the P2006T in terms of human-machine interface, weight saving and reliability this backup instrument V.1.0.5 is installed.

For more details refer to MOD2006/212.

WARNING

All MD302 Stand-by Attitude Module settings, set up during the aircraft delivery or after a maintenance activity, must not be modified.

WARNING

In case of replacement of MD302 Stand-by Attitude Module, verify proper software load and confirm that its software version number is compliance with that one showed above, before install it.

INTENTIONALLY LEFT BLANK

17. PLACARDS

In addition to the limitation placards reported on Section 2, following placards are installed on the aircraft.

NOTE

Additionally, nearby the placards listed below (English language), directly-translated placards in the language of the country in which the airplane is registered can be installed, when required by the specific NAA.

Description	Placard	Place
ELT equipment location		Baggage compartment, right side
First Aid Kit location		Baggage compartment, aft cover panel
Fire extinguisher location	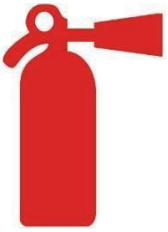	Cockpit floor, pilot side
Emergency gear extension compartment location		Removable cap

Description	Placard	Place
Emergency gear extension instructions		Emergency distributors compartment
Alternate static port location	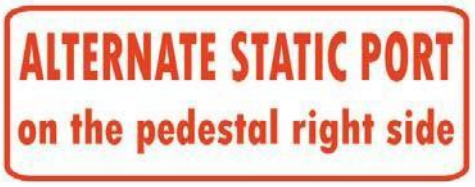	Central pedestal, left side
Alternate static port operating instructions	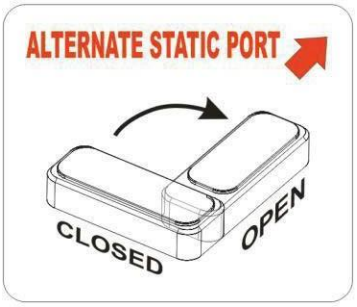	Central pedestal, right side
Static ports location	**STATIC PORT** **KEEP CLEAN**	Static ports: fuselage - both sides
Battery compartment location		Fuselage tail, left side
EXT power connection: socket schematic and instructions	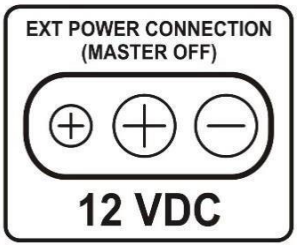	Fuselage tail, left side

Description	Placard	Place
Landing gear hydraulic accumulator: low pressure limit	EMERGENCY OIL TANK PRESS LOW PRESSURE LIMIT **20 BAR**	LG hydraulic compartment cap (fuselage tail, left side)
LG hydraulic compartment location	**LANDING GEAR HYDRAULIC COMPARTMENT**	Fuselage tail, left side, in correspondence of LG hydraulic compartment cap
Towing limitations	**CAUTION** **TOWING MAXIMUM TURNING ANGLE: 20° EITHER SIDE OF CENTER**	Nose LG forward door
Stabilator excursion range	5° 0° 16°	Fuselage tail, left side, in correspondence of the stabilator leading edge
Aircraft grounding	! CONNECT THE AIRCRAFT TO ELECTRICAL GROUND BEFORE REFUELING !	Close to the fuel filler cap
Engine coolant expansion tank location	COOLANT	Engine nacelle top side

Description	Placard	Place
Steel boards: a/c identification marks	**(Sample)**	Fuselage tail, left side
Main LG tires inflation pressure values		MLG leg, LH and RH
Nose LG tire inflation pressure values		Nose LG fork

INTENTIONALLY LEFT BLANK

INTENTIONALLY LEFT BLANK

18. INSTRUMENTS PANEL

GARMIN G1000 NXi - Instruments panel (typical layout)

Item	Description
1	GDU 1050 (PFD)
2	Audio Panel
3	A/P Programmer/Computer
4	GDU 1050 (MFD)
5	Main bus breaker panel
6	Ess bus breaker panel (RH)
7	Ess bus breaker panel (LH)
8	Avionic bus breaker panel (LH & RH)
9	Battery and Alternators (LH & RH) breakers
10	Cabin ventilation (RH)
11	Instrument light switch (if installed)
12	Strobe light switch

Item	Description
13	Navigation light switch
14	Taxi light switch
15	Landing light switch
16	Cabin/Instruments/Panel lights dimmers
17	Flaps switch
18	MD-302 Standby Attitude Module
19	Cross bus 2 switch
20	RH battery switch
21	Cross bus 1 switch
22	Master switch
23	Avionics master switch 2
24	Avionics master switch 1
25	LH Battery Switch
26	Landing gear lever
27	Windshield defrost
28	Cabin heat
29	Cabin ventilation
30	Emergency Locator Transmitter switch
31	A/P master switch
32	Pitot heating switch
33	Rudder trim disconnect switch
34	Pitch trim disconnect switch
35	Electric fan switch
36	Fire detection system test switch

19. ELECTRICAL SYSTEM

Primary DC power is provided by two engine-driven generators which, during normal operations, operate in parallel.

Each generator is rated of 40 Amps and 14 VDC, as the two voltage regulators. An automatic overvoltage device protects the circuits and the electric components from an excessive voltage caused by generator failures.

The power rating of each generator is such that if one generator fails the other one can still supply the airplane equipment to maintain flight safety.

Secondary DC power is provided by a main battery (lead type - 12 V, 23-Ah) and a secondary battery (lead type - 12V, 13 Ah).

An external DC power source can be connected to the aircraft distribution system in order to have it fed without starting the engine.

The ammeter section of the G1000 EIS can indicate the current supplied by either left or right generator switching a dedicated selector.

There are five different buses:

- Battery bus,
- LH Generator bus,
- RH Generator bus,
- LH Avionics bus,
- RH Avionics bus.

The distribution system operates as a single bus with power being supplied by the battery and both generators but it is possible to separate the left busses from the right busses when required by means of the Cross Bus switches.

The switches to enable and disable the alternators and battery are grouped in the master switches group and are located in the centre side of the instrument panel. Only the emergency switch, that allow to put in parallel both batteries is located in left side of the instrument panel.

All electrical loads are divided among the five busses on the basis of their importance and required power: equipment with duplicate functions is connected to separate busses.

The Battery bus, which supplies the most important loads, is energized from three sources: the battery and both generators. This allows the bus for remaining active also in case of two independent faults in the supply paths.

The following loads are connected to the battery bus:

Breaker ID
Start LH
Start RH
Fan TAS (if installed)
Fuel Pump LH
Fuel Pump RH
Instrum.
E.I.S. 1
E.I.S. 2
P.F.D.
GPS/NAV 1
COM 1
AHRS
Stall warning
A.D.I.
ADC
Flaps actuator
Door
Cabin Light
Landing light
Strobe Light
Instr. Light
Cross LH
Cross RH
Pilot seat
Backup Battery
Landing Gear
Relay Landing Gear
Light Landing Gear

• In addition, Emergency Light is connected directly on the battery.

Cross Bus LH	Cross Bus RH	Avionic Bus LH	Avionic Bus RH
Field LH	Field RH	Avionic bus LH	Avionic bus RH
Taxi Light	Rudder Trim	Trim A/P	COM 2
Pitot Heat	Co-pilot seat	A/P	M.F.D.
Voltage regulator LH	Voltage regulator RH	XPDR	A.D.F. (if installed)
Cabin fan	Nav Light	D.M.E.	GPS/NAV 2
-	Audio panel	Turn coord	Converter 12/28
-	Landing Light	TCAS (if installed)	12V socket

On the central pedestal (see Figure below) there are seven switches disposed on two rows: on the first row there is the MASTER SWITCH which allows for connecting, through the battery relay, the battery to the battery bus.

LH and RH FIELD switches control the pertinent generator: setting the switch to OFF puts the pertinent generator off-line.

In correspondence of the second row there are 4 switches LH/RH AVIONIC and LH/ RH CROSS BUS.

Central pedestal switches console

The first two switches allow, through a relay, to cut off the power supply to the pertinent avionic bus.

The second ones allow, through a relay, for realizing the parallel connection between the pertinent generator bus and the battery bus. Setting these ones to OFF, the pertinent generator bus (and related avionic bus supplied) is separated from the battery bus and from opposite generator bus.

When both generators are correctly operating and all above mentioned switches are in ON position, all the busses are connected to the generators.

The ignition switches, two for each engine and grouped on the over head panel, are instead independent from the airplane electrical system (generation and distribution); they only control and open the engine electrical circuit.

WARNING

If ignition switches are turned ON, a propeller movement can cause the engine starting with consequent hazard for people nearby.

Supplement G19: page replacement instructions

SECTION 8 – AIRCRAFT CARE AND MAINTENANCE

See Basic AFM – Section 8

INTENTIONALLY LEFT BLANK

SUPPLEMENT NO. G20 - GARMIN GTX345R TRANSPONDER

Record of Revisions

Rev	Revised page	Description of Revision	Tecnam Approval			EASA Approval or Under DOA Privileges
			DO	OoA	HDO	
0	-	First issue	A. Sabino	M. Oliva	L. Pascale	Approved under DOA No. EASA.21J.335 privileges.
1	G20-1, 2, 3	Typo errors Specification of optional characteristics (MOD2006/298).	G. Valentino	D. Ronca	M. Oliva	Approved under the authority of DOA, ref. EASA.21J.335 (MOD2006/382.200129)

List of Effective Pages

Page	Revision	Page	Revision
G20-1	Rev 1	**G20-3**	Rev 1
G20-2	Rev 1	**G20-4**	Rev 0

INTRODUCTION

This section contains supplemental information to operate the aircraft in a safe and efficient manner when equipped with Garmin GTX345R device.

GENERAL

Garmin GTX345R is a transponder operating with A, C and S mode. Its user interface is part of GARMIN G950 NXi software

LIMITATIONS

Garmin GTX345R manuals do not address operating limitations more severe than those usually applicable to the P2006T.

EMERGENCY PROCEDURES

In case of emergency conditions, transponder is able to send codified messages to the Air Traffic Control; messages are classified as follows:

Code	Condition
7500	Aircraft subjected to illegal interference
7600	Loss of radio communications
7700	Emergencies

NORMAL OPERATIONS

DETAILED OPERATING PROCEDURES

Normal operating procedures are described on GARMIN G950 NXi Pilot's guide (P/N 190-02286-00) rev. 00 or later versions.

NOTE

GARMIN G950 NXi Pilot's guide (P/N 190-02286-00) - rev. 00 or later versions - must be carried onboard the airplane at all times.

PERFORMANCES

Garmin GTX345R employment does not affect the aircraft performances

WEIGHT AND BALANCE

See Section 6 of this Manual.

SYSTEMS

GTX 345R is a Mode S transponder with ADS-B extended squitter capability and also includes UAT and 1090 receivers for ADS-B IN (optional)/OUT capabilities. It is mounted on a rack, located behind the PFD.

It delivers up to 250 watts of nominal power. The PFD displays the code, reply symbol and mode of operation; in the event of PFD failure the system switches to reversionary mode and the transponder interface can be operated from MFD.

The GTX 345R is connected to both GIA63W and to XPDR antenna.

Figure 1 – Garmin GTX 345R

INTENTIONALLY LEFT BLANK

SUPPLEMENT NO. G21

BECKER 3500 ADF FOR GARMIN NXI

Record of Revisions

Rev	Revised page	Description of Revision	Tecnam Approval			EASA Approval or Under DOA Privileges
			DO	OoA	HDO	
0	-	First issue	A. Sabino	C. Caruso	M. Oliva	Approved under DOA privileges.

List of Effective Pages

Page	Revision
G21-1	Rev 0
G21-2	Rev 0

GENERAL

Refer to basic AFM.

LIMITATIONS

Refer to basic AFM.

EMERGENCY PROCEDURES

Refer to basic AFM.

NORMAL PROCEDURES

The user interface of Becker 3500 ADF system is part of the GARMIN NXi Suite software.

Normal operating procedures are described on GARMIN NXi Pilot's guide.

NOTE

GARMIN NXi Pilot's guide (P/N 190-02286-00) - rev. 00 or later versions - must be carried onboard the airplane at all times.

PERFORMANCE

Refer to basic AFM.

WEIGHT AND BALANCE

Refer to basic AFM.

AIRFRAME AND SYSTEMS DESCRIPTION

Refer to basic AFM.

AIRCRAFT CARE AND MAINTENANCE

Refer to basic AFM.

SUPPLEMENT NO. G22

GARMIN GTS800 TAS FOR GARMIN NXi

Record of Revisions

Rev	Revised page	Description of Revision	Tecnam Approval			EASA Approval or Under DOA Privileges
			DO	OoA	HDO	
0	-	First issue	A. Sabino	C. Caruso	M. Oliva	Approved under DOA privileges.

List of Effective Pages

Page	Revision
G22-1	Rev 0
G22-2	Rev 0

General

Refer to basic AFM.

Limitations

Refer to basic AFM.

Emergency Procedures

Refer to basic AFM.

Normal Procedures

The user interface of GARMIN GTS800 TAS system is part of the GARMIN Suite software.

Normal operating procedures are described on GARMIN NXi Pilot's guide .

NOTE *GARMIN G950 Pilot's guide (P/N 190-02286-00) - rev. 00 or later versions - must be carried onboard the airplane at all times.*

Performance

Refer to basic AFM.

Weight and Balance

Refer to basic AFM.

Airframe and Systems Description

Refer to basic AFM.

Aircraft Care and Maintenance

Refer to basic AFM.

SUPPLEMENT NO. G23

SMP CONFIGURATION FOR GARMIN NXI AVIONICS SUITE

RECORD OF REVISIONS

Rev	Revised page	Description of Revision	Tecnam Approval			EASA Approval Or Under DOA Privileges
			DO	OoA	HDO	
0	-	First issue	A. Sabino	D. Ronca	M. Oliva	Approved under the authority of DOA ref. EASA.21J.335 MOD2006/345.181120
1	G23-1 to 3	Amended title, references to Garmin Avionics Suite. Typo on cross-reference to Supplement G06 corrected.	A. Sabino	D. Ronca	M. Oliva	Approved under the authority of DOA ref. EASA.21J.335 MOD2006/357.190226
2	G23-10, 13, 19	Correction of typo errors	A. Glorioso	D. Ronca	M. Oliva	Approved under the authority of DOA ref. EASA.21J.335 MOD2006/380.191111
3	G23-1, 2,7,8,9,10,11,12,13,14,15,16,17,18,19,20 SMP2-3 SMP3-3 thru 5 SSMP3 – 7 thru 9 SSMP3 – 21, 29 SSMP3 – 36 thru 40 SSMP3 – 49 thru 53 SSMP4 – 3, 24 thru 25 SSMP7 – 39 SSMP7 – 42 thru 46	Correction of typo errors	G. Valentino	D. Ronca	M. Oliva	Approved under the authority of DOA ref. EASA.21J.335 MOD2006/389.200303

The information herein contained have been previously published in Supplement G14, which remains applicable for the aircraft equipped with Garmin G950 avionics.

LOEP

	Pages	Revision
Cover pages	G23 – 4,5,6	*Rev. 0*
	G23-1, 2,3,7,8,9,10,11,12,13,14,15,16,17,18,19,20	*Rev. 3*
Section 2	SMP2 – 3	*Rev. 3*
Section 3	SSMP3 – 3 thru 5	*Rev. 3*
	SSMP3 – 7 thru 9	*Rev. 3*
	SSMP3 – 21	*Rev. 3*
	SSMP3 – 29	*Rev. 3*
	SSMP3 – 36 thru 40	*Rev. 3*
	SSMP3 – 49 thru 53	*Rev. 3*
Section 4	SSMP4 – 3	*Rev. 3*
	SSMP4 – 24 thru 25	*Rev. 3*
Section 7	SSMP7 – 39	*Rev. 3*
	SSMP7 – 42 thru 46	*Rev. 3*

INTRODUCTION

This section contains supplemental information to operate, in a safe and efficient manner, the aircraft when equipped with Garmin NXi Integrated Flight Deck System (Design Change MOD 2006/271) and with Special Mission Platform. The Special Mission Platform refers to the following design changes:

- MOD2006/046 - Power supply from built-in generators
- MOD2006/202 - Replacement of existing 40A alternators with 70A
- MOD2006/204 - Installation of converter box

For the two first design changes the supplements (n° G06 and G13) are already approved by EASA and in this supplement we report the same information for reference.

The Rotax engine built-in generators, one for each engine, feed two bus bars made available for end user equipment, when the design change 2006/046 is installed.

When 70A alternators are installed replacing the standard, 40A ones, the electrical system logic is not affected by any substantial change. Primary DC power is provided by two engine-driven alternators which, during normal operations, operate in parallel.

Each alternator is rated at 14,2 - 14,8 Vdc (through two external, first fuselage frame installed voltage regulators), 70 Amp and is provided with an automatic overvoltage device protecting the circuits and the electric components from an excessive voltage caused by alternator's failures.

The power rating of each generator is such that if one generator fails the other one can still supply the airplane equipment to maintain flight safety.

The information contained herein supplements or supersedes the basic Aircraft Flight Manual or the Supplement G19, as applicable: detailed instructions are provided to allow the owner for replacing the Basic AFM/Supplement G19 pages containing information amended as per the Design Changes in subject.

NOTE

Usually, the Special Mission Platform P2006T is also equipped with holes in the cabin and/or tailcone, ready for third parties sensor's integration. While the Tecnam intent is to offer a platform ready for sensors' integration, it is end-user responsibility to receive the approval from authority for each equipment installation.

It is the owner's/operator's responsibility to replace the mentioned pages in the AFM in accordance with the instructions herein addressed section by section.

INTENTIONALLY LEFT BLANK

Supplement G23: pages replacement instructions

SECTION 1 – GENERAL

Apply following instruction:

See Basic AFM - Section 1

INTENTIONALLY LEFT BLANK

Supplement G23: pages replacement instructions

SECTION 2 – LIMITATIONS

Apply following instruction:

See Basic AFM - Section 2

INTENTIONALLY LEFT BLANK

Supplement G23: pages replacement instructions

SECTION 3 – EMERGENCY PROCEDURES

Apply following pages replacement procedure:

Supplement G23 - EMERGENCY PROCEDURES page		Supplement G19 Section 3 page
SSMP3 – 3 thru 5	**REPLACE**	Page S3 – 3 thru 5 of Supplement G19, Section 3
SSMP3 – 7 thru 9	**REPLACE**	Page S3 – 8 thru 11 of Supplement G19, Section 3
SSMP3 – 21	**REPLACES**	Page S3 – 21 of Supplement G19, Section 3
SSMP3 – 29	**REPLACES**	Page S3 – 29 of Supplement G19, Section 3
SSMP3 – 36 thru 37	**REPLACE**	Page S3 – 36 thru 37 of Supplement G19, Section 3
SSMP3 – 39 thru 40	**REPLACE**	Page S3 – 39 thru 40 of Supplement G19, Section 3
SSMP3 – 49 thru 53	**REPLACE**	Page S3 – 49 thru 53 of Supplement G19, Section 3

INTENTIONALLY LEFT BLANK

1. INTRODUCTION

Section 3 includes checklists and detailed procedures for coping with various types of emergency conditions that could arise after a system failure.

The procedures affected from installation of the Special Mission Platform are the following:

- **Single alternator failure / overvoltage**
- **Both alternators failure**
- **Both alternators overvoltage**
- **Engine securing**
- **Total electrical failure**
- **Inflight engine restart**
- **Engine failure during takeoff run**
- **Engine failure during climb**
- **Engine failure in flight**
- **Engine fire on the ground**
- **Engine fire during takeoff run**
- **Engine fire in flight**
- **Electrical smoke in cabin on the ground**
- **Electrical smoke in cabin during flight**

The main difference regarding aircraft systems, compared with the basic AFM, is the presence of the Power supply from built-in generators, Alternators with 70A and Converter Box. The powering and disconnection of converter box is very simple and, in most of abnormal cases, is automatically managed by relays and safety provisions.
The converter box (following described in Section 7) is managed by the pilot only via two switches, located in the bottom LH side of pilot seat on a single panel provided by: two switches, two breakers and two indicating lamps.
Only when pilot selects BOTH switches ON (right and left AUX) and both alternators are operative the system allows a surplus of power generated by the engines and alternators to flow into 4x converters and, then, into mission equipment, when installed.
The health status of converters inside the box (located into the baggage compartment) is monitored by mission operator, via 4x failure indicating lamps. Following the key concepts when managing converter boxes:

1. Mission Power Switches: they enable the converter box ONLY when BOTH are set to ON;
2. Converter box power: enabled only if both LH and RH main alternators are generating power;
3. Converter box: automatically switches OFF in case LH or RH main/aux alternators is faulty / not generating;
4. Converter box: automatically switches OFF in case LH or RH mission switch is set to OFF;

5. Failure lamp: when illuminated, indicates that the correspondent converter is not working properly and needs to be replaced if the maximum available power from converter box is needed. When all converters are working properly, the system is capable to output 40A@28V. If one converter fails, 12A@28V are lost. For this reason, the end-user mission can continue if the equipment demand is less than 25/28A. On the contrary, the converter needs to be replaced.

Before operating the aircraft, the pilot/operator should become thoroughly familiar with this manual and, in particular, with this Section. Further on a continued and appropriate training and self study should be done.

Two types of emergency procedures are hereby given.

a. "BOLD FACES" which must be known by heart by the pilot and executed, in the correct and complete sequence, immediately after the failure is detected and confirmed.

   These procedures characters are boxed and highlighted:

1.1 ENGINE FAILURE DURING TAKEOFF RUN

BEFORE ROTATION: ABORT TAKE OFF		
1.	**Throttle Lever**	***BOTH IDLE***
2.	**Rudder**	***Keep heading control***
3.	**- -**	
4.	**- -**	

b. "other procedures" which should be well theoretically known and mastered, but that can be executed entering and following step by step the AFM current section appropriate checklist.

Additionally operating the aircraft, the pilot should become thoroughly familiar with the Garmin G950 Pilot's Guide for Tecnam P2006T (P/N 190-01146-XX) – last issue - and, in particular, with the present AFM Section.

CAUTION

Garmin G950 Pilot's Guide for Tecnam P2006T (P/N 190-01146-XX) – last issue - must be carried onboard the airplane at all times.

WARNING

Garmin G950 has a very high degree of functional integrity. However, the pilot must recognize that providing monitoring and/or self-test capability for all conceivable system failures is not practical. Although unlikely, it may be possible for erroneous operation to occur without a fault indication shown by the G950. It is thus the responsibility of the pilot to detect such an occurrence by means of crosschecking with all redundant or correlated information available in the cockpit.

In any case, as a failure or abnormal behaviour is detected pilots should act as follows:

1. Keep self-control and maintain aircraft flight attitude and parameters
2. Analyse the situation identifying, if required, the area for a possible emergency landing
3. Apply the pertinent procedure
4. Inform the Air Traffic Control as applicable

NOTE

For the safe conduct of later flights, any anomaly and/or failure must be communicated to the National Authorities in charge, in order to put the aircraft in a fully operational and safe condition.

NOTE

*In this Chapter, following definitions apply**:***
***Land as soon as possible**: land without delay at the nearest suitable area at which a safe approach and landing is assured.*

***Land as soon as practical**: land at the nearest approved landing area where suitable repairs can be made.*

2.1. SINGLE ALTERNATOR FAILURE / OVERVOLTAGE

Annunciation window	Alert window
L ALT FAIL	Lh Alternator

OR

R ALT FAIL	Rh Alternator

1. FIELD LH (or RH) *OFF*
2. LH and RH AUX FIELD switch *BOTH OFF*
3. FIELD LH (or RH) *ON*

<u>If the LH (or RH) ALT caution stays displayed</u>

1. FIELD LH (or RH) *OFF*

<u>If the LH (or RH) GENERATOR caution persists displayed</u>

1. CROSS BUS LH (or RH) *OFF*
2. **Land as soon as practical.**

NOTE

The battery and a single generator are able to supply the electrical power necessary for the entire mission, but redundancy is lost.

2.2 BOTH ALTERNATORS FAILURE

Annunciation window	Alert window
L ALT FAIL	Lh Alternator
R ALT FAIL	Rh Alternator

In event of both L and R ALT FAIL caution alerts displayed:

1. FIELD LH and RH *BOTH OFF*
2. LH and RH AUX FIELD switch *BOTH OFF*
3. FIELD LH and RH *BOTH ON*

If both LH and RH ALT cautions stay displayed

1. FIELD LH and RH *BOTH OFF*
2. CROSS BUS LH and RH *BOTH OFF*

If engine starting battery modification is applied

1. EMERG BATT switch ON
2. **Land as soon as possible.**

If engine starting battery modification is not applied

1. **Land as soon as possible.**

NOTE *The battery can supply electrical power for at least 30 minutes.*

2.3 BOTH ALTERNATORS OVERVOLTAGE

Annunciation window	Alert window
L BUS VOLT HIGH	Lh overvoltage
R BUS VOLT HIGH	Rh overvoltage

In event of both L and R BUS VOLT HIGH warning alerts displayed:

1. FIELD LH and RH *BOTH OFF*
2. LH and RH AUX FIELD switch *BOTH OFF*
3. FIELD LH and RH *BOTH ON (one at a time)*

<u>if LH (or RH) OVERVOLT warning stays displayed</u>

1. FIELD LH (or RH) *OFF*

<u>if both LH and RH OVERVOLT warning stay displayed</u>

1. CROSS BUS LH and RH *BOTH OFF*
2. FIELD LH and RH *BOTH OFF*
3. FIELD LH and RH *BOTH ON (one at a time)*

If LH (or RH) OVERVOLT warningt stays displayed

1. FIELD LH (or RH) *OFF*
2. CROSS BUS LH (or RH) *ON*

If both LH and RH OVERVOLT warning stay displayed

1. FIELD LH and RH *BOTH OFF*
2. CROSS BUS LH and RH *BOTH OFF*

<u>If engine starting battery modification is applied</u>

1. EMERG BATT switch ON
2. **Land as soon as possible.**

<u>If engine starting battery modification is not applied</u>

1. **Land as soon as possible.**

NOTE *The battery can supply electrical power for at least 30 minutes.*

3. ENGINE SECURING

Following procedure is applicable to shut-down one engine in flight:

1. Throttle Lever	***IDLE***
2. Ignition	***BOTH OFF***
3. Propeller Lever	***FEATHER***
4. Fuel Selector	***OFF***
5. Electrical fuel pump	***OFF***
6. LH and RH AUX FIELD switch	***BOTH OFF***

NOTE *If necessary, this procedure is applicable to both engines. When both engines are secured, both CROSS BUS switches must be set to OFF.*

After securing engine(s), after analysing situation, refer immediately to following procedures:

ENGINE FAILURE IN FLIGHT:	see Para. 6.5
SINGLE GENERATOR FAILURE:	see Para. 2.1
or BOTH GENERATOR FAILURE:	see Para. 2.2
INFLIGHT ENGINE RESTART:	see Para. 6.2
ONE ENGINE INOPERATIVE LANDING:	see Para. 6.6
or LANDING WITHOUT ENGINE POWER:	see Para. 10.1

5. OTHER EMERGENCIES

5.1 EMERGENCY DESCENT

CAUTION

Descent with airspeed at VLE, idle power and gear down will provide high descent rates and pitch attitudes up to -15°.

Anticipate altitude capture and return to level flight during emergency descent in order to assure a safe and smooth recovery from maneuver.

1.	Power levers	*IDLE*
2.	Flaps	*UP*
3.	IAS	*below VLO/VLE*
4.	Landing gear	*DOWN*
5.	Airspeed	*Up to VLE*

5.2 TOTAL ELECTRICAL FAILURE

In case of electrical system overall failure, apply following procedure:

1.	Emergency light	*ON*
2.	Standby attitude indicator switch	*ON*
3.	MASTER SWITCH	*OFF*
4.	FIELD LH and RH	*BOTH OFF*
5.	LH and RH AUX FIELD switch	*BOTH OFF*
6.	MASTER SWITCH	*ON*
7.	FIELD LH and RH	*BOTH ON*

<u>If failure persists</u>

9.	EMERG BATT switch	ON (if engine starting battery installed)

10. **Land as soon as possible** applying *emergency landing gear extension* procedure (see Para. 7.1)

WARNING

An electrical system overall failure prevents flaps operation: landing distance without flaps increases of about 25%.

CAUTION

A fully charged battery can supply electrical power for at least 30 minutes.

6.2 INFLIGHT ENGINE RESTART

WARNING

After:

- *mechanical engine seizure;*
- *fire;*
- *major propeller damage*

engine restart is not recommended.

1.	Carburettor heat	*ON if required*
2.	Electrical fuel pump	*ON*
3.	Fuel quantity indicator	*CHECK*
4.	Fuel Selector	*CHECK (Crossfeed if required)*
5.	FIELD	*OFF*
6.	LH and RH AUX FIELD switch	*BOTH OFF*
7.	Ignition	*BOTH ON*
8.	Operating engine Throttle Lever	*SET as practical*
9.	Stopped engine Throttle Lever	*IDLE*
10.	Stopped engine Propeller Lever	*FULL FORWARD*
11.	Start push-button	*PUSH*
12.	Propeller Lever	*SET at desired rpm*
13.	FIELD	*ON (check for positive ammeter)*
14.	Engine throttle levers	*SET as required*

<u>If engine restart is unsuccessful</u>

15.	EMERG BATT switch	ON (if starting battery installed)
16.	Repeat engine restart procedure	

CAUTION

After engine restart, if practical, moderate propeller rpm and throttle increase to allow OIL and CHT/CT temperatures for stabilizing in the green arcs.

NOTE

If the fuel quantity in the tank which feeds the stopped engine is low, select the opposite side fuel tank by means of the fuel selector.

<u>If engine restart is still unsuccessful:</u>

17.	Affected engine	*SECURE (see engine securing procedure Para. 3)*

18. **Land as soon as possible** applying *one engine inoperative landing* procedure. See Para. 6.6

6.3 ENGINE FAILURE DURING TAKEOFF RUN

BEFORE ROTATION: ABORT TAKE OFF

1.	**Throttle Lever**	***BOTH IDLE***
2.	**Rudder**	***Keep heading control***
3.	**Brakes**	***As required***

When safely stopped:

4.	Failed Engine Ignition	BOTH OFF
5.	Failed Engine Field	*OFF*
6.	LH and RH AUX FIELD switch	*BOTH OFF*
7.	Failed Engine Electrical fuel pump	*OFF*

IF THE DECISION IS TAKEN TO CONTINUE THE TAKEOFF:

WARNING

A take-off abort should always be preferred if a safe stop can be performed on ground.

A suggested "GO-NO-GO" criteria is: abort take-off until LG is still down and locked.

Once airborne accelerate to Blue Line Speed (V_{YSE}) before commanding LG retraction.

Take-off planning should take into account that high density altitude and aircraft mass may result in OEI negative climb rate.

V_{YSE} with flap up shall be flown in order to achieve best possible rate of climb after landing gear retraction and engine feathering.

1.	**Operating engine Throttle Lever**	***FULL POWER***
2.	**Operating engine Propeller Lever**	***FULL FORWARD***
3.	**Heading**	***Keep control using rudder and ailerons***
4.	**Attitude**	***Reduce as appropriate to keep airspeed over 62 KIAS***
5.	**Inoperative engine Propeller Lever**	***FEATHER***
6.	**Landing gear control lever**	***UP***
7.	**Airspeed**	***V_{XSE}/V_{YSE} as required***
8.	**Flaps**	***0°***
9.	**LH and RH AUX FIELD switch**	***BOTH OFF***

6.4 ENGINE FAILURE DURING CLIMB

1.	**Autopilot**	**OFF**
2.	**Heading**	***Keep control using rudder and ailerons***
3.	**Attitude**	***Reduce as appropriate to keep airspeed over 62 KIAS***

4.	Operating engine Throttle Lever	*FULL THROTTLE*
5.	Operating engine Propeller Lever	*FULL FORWARD*
6.	Operative engine Electrical fuel pump	*Check ON*
7.	LH and RH AUX FIELD switch	*BOTH OFF*
8.	Inoperative engine Propeller Lever	*FEATHER*
9.	Inoperative engine	Confirm and *SECURE*

If engine restart is possible:

10. Apply INFLIGHT ENGINE RESTART procedure *see Para 6.2*

If engine restart is unsuccessful or it is not recommended:

11. **Land as soon as possible**
12. One engine inoperative landing procedure. *see Para. 6.6*

WARNING

Following a mechanical engine seizure, fire or a major propeller damage engine restart is not recommended.

WARNING

Continuation of flight to a safe landing runway must be planned taking into account maximum operating ceiling in OEI condition. Refer to Section 5 Para 1, "One-engine rate of climb".

6.5 ENGINE FAILURE IN FLIGHT

1.	**Autopilot**	***OFF***
2.	**Heading**	***Keep control using rudder and ailerons***
3.	**Attitude**	***Adjust as appropriate to keep airspeed over 62 KIAS***

4.	LH and RH AUX FIELD switch	*BOTH OFF*
5.	Operating engine	*Monitor engine instruments*
6.	Operative engine Electrical fuel pump	*Check ON*
7.	Operating engine Fuel Selector	*Check correct feeding (crossfeed if needed)*

<u>If engine restart is possible:</u>

8.	Apply INFLIGHT ENGINE RESTART procedure	*see Para 6.2*

<u>If engine restart is unsuccessful or it is not recommended:</u>

9.	Land as soon as possible	
10.	One engine inoperative landing procedure.	*see Para. 6.6*

WARNING

Following a mechanical engine seizure, fire or a major propeller damage engine restart is not recommended.

WARNING

Continuation of flight to a safe landing runway must be planned taking into account maximum operating ceiling in OEI condition. Refer to Section 5 Para 12. Rate of climb with One Engine Inoperative.

8 SMOKE AND FIRE OCCURRENCE

8.1 ENGINE FIRE ON THE GROUND

1.	**Fuel Selectors**	***BOTH OFF***
2.	**Ignitions**	***ALL OFF***
3.	**LH and RH AUX FIELD switch**	***BOTH OFF***
4.	**Electrical fuel pumps**	***BOTH OFF***
5.	**Cabin heat and defrost**	***OFF***
6.	**MASTER SWITCH**	***OFF***
7.	**Parking Brake**	***ENGAGED***
8.	**Aircraft Evacuation**	**carry out immediately**

WARNING

Consider use of ditching emergency exit to escape in case pilot or passenger doors are blocked, watch for engine hot parts, fuel, hydraulic fluid or oil spills. Leave aircraft in upwind direction.

8.2 ENGINE FIRE DURING TAKEOFF RUN

BEFORE ROTATION: ABORT TAKE OFF

1.	**Throttle Lever**	**BOTH IDLE**
2.	**Rudder**	***Keep heading control***
3.	**Brakes**	***As required***

With aircraft under control

4.	**Fuel Selector**	***BOTH OFF***
5.	**Ignitions**	***ALL OFF***
6.	**LH and RH AUX FIELD switch**	***BOTH OFF***
7.	**Electrical fuel pump**	***BOTH OFF***
8.	**Cabin heat and defrost**	***OFF***
9.	**MASTER SWITCH**	***OFF***
10.	**Parking Brake**	***ENGAGED***
11.	**Aircraft Evacuation**	***carry out immediately***

WARNING

Consider use of ditching emergency exit to escape in case pilot or passenger doors are blocked, watch for engine hot parts, fuel, hydraulic fluid or oil spills. Leave aircraft in upwind direction.

IF THE DECISION IS TAKEN TO CONTINUE THE TAKEOFF:

WARNING

A take-off abort should always be preferred if a safe stop can be performed on ground.

A suggested "GO-NO-GO" criteria is: abort take-off until LG is still down and locked.

Once airborne accelerate to Blue Line Speed (V_{YSE}) before commanding LG retraction.

Take-off planning should take into account that high density altitude and aircraft mass may result in OEI negative climb rate.

V_{YSE} with flap up shall be flown in order to achieve best possible rate of climb after landing gear retraction and engine feathering.

1.	**Operating engine Throttle Lever**	***FULL POWER***
2.	**Operating engine Propeller Lever**	***FULL FORWARD***
3.	**Heading**	***Keep control using rudder and ailerons***
4.	**Attitude**	***Reduce as appropriate to keep airspeed over 62 KIAS***
5.	**Fire affected engine Propeller Lever**	***FEATHER***
6.	**Landing gear control lever**	***UP***
7.	**Airspeed**	***V_{XSE}/V_{YSE} as required***
8.	**Flaps**	***0°***

At safe altitude

9.	LH and RH AUX FIELD switch	*BOTH OFF*
10.	Cabin heat and defrost	*BOTH OFF*
11.	Fire affected engine Fuel Selector	*Confirm and OFF*
12.	Fire affected engine Ignitions	*Confirm and BOTH OFF*
13.	Fire affected engine Electrical fuel pump	*Confirm and OFF*
14.	Fire affected engine FIELD	*OFF*

15. **Land as soon as possible** applying *one engine inoperative landing* procedure. See Para. 6.6

8.3 ENGINE FIRE IN FLIGHT

1.	**Cabin heat and defrost**	***BOTH OFF***
2.	**LH and RH AUX FIELD switch**	***BOTH OFF***
3.	**Autopilot**	***OFF***
4.	**Fire affected engine Fuel Selector**	***Confirm and OFF***
5.	**Fire affected engine Ignition**	***Confirm and BOTH OFF***
6.	**Fire affected engine Throttle Lever**	***Confirm and FULL FORWARD***
7.	**Fire affected engine Propeller Lever**	***Confirm and FEATHER***
8.	**Fire affected engine Electrical fuel pump**	***OFF***
9.	**Heading**	***Keep control using rudder and ailerons***
10.	**Attitude**	***Adjust as appropriate to keep airspeed over 62 KIAS***
11.	**Fire affected engine Field**	***OFF***
12.	**Cabin ventilation**	***OPEN***

13. **Land as soon as possible** applying *one engine inoperative landing* procedure. See Para. 6.6

8.4 ELECTRICAL SMOKE IN CABIN ON THE GROUND

1.	**MASTER SWITCH**	***OFF***
2.	**Cabin heat and defrost**	***OFF***
3.	**LH and RH AUX FIELD switch**	***BOTH OFF***
4.	**Throttle Lever**	***BOTH IDLE***
5.	**Ignitions**	***ALL OFF***
6.	**Fuel Selector**	***BOTH OFF***
7.	**Parking Brake**	***ENGAGED***
8.	**Aircraft Evacuation**	**carry out immediately**

WARNING

Consider use of ditching emergency exit to escape in case pilot or passenger doors are blocked, watch for engine hot parts, fuel, hydraulic fluid or oil spills. Leave aircraft in upwind direction.

8.5 ELECTRICAL SMOKE IN CABIN DURING FLIGHT

1. Cabin ventilation	***OPEN***
2. Emergency light	***ON***
3. Standby attitude indicator switch	***ON***
4. Gain VMC conditions as soon as possible	

In case of cockpit fire:

5. Fire extinguisher	***use toward base of flames***

CAUTION

A tripped circuit breaker should not be reset.

If smoke persists, shed electrical supply in order to isolate faulty source by:

6. FIELD LH and RH	*OFF*
7. LH and RH AUX FIELD switch	*BOTH OFF*
8. AVIONICS LH and RH	*OFF*
9. CROSS BUS LH and RH	*BOTH OFF*

CAUTION

A fully charged battery can supply electrical power for at least 30 minutes.

If faulty source is found:

10. It may be possible to restore non faulty power sources (one at a time)

If smoke persists:

WARNING

Before total electrical system shutdown consider gaining VMC condition, at night set personal emergency light on.

Only emergency light and emergency ADI will be electrically powered.

All radio COM and NAV, Landing Gear lever (normal mode) and indication lights, electrical trims and flaps will be unserviceable.

11. MASTER SWITCH *OFF*

12. **Land as soon as possible**

Supplement G23: pages replacement instructions

SECTION 4 – NORMAL PROCEDURES

Apply following pages replacement procedure:

Supplement G23 - NORMAL PROCEDURES page		Supplement G19 Section 4 page
SSMP4 – 3	**REPLACE**	Page S4 – 3 of Supplement G19, Section 4
SSMP4 – 24 thru 25	**REPLACE**	Page S4 – 24 thru 25 of Supplement G19, Section 4

INTENTIONALLY LEFT BLANK

1. INTRODUCTION

Section 4 describes checklists and recommended procedures for the conduct of normal operations for ***P2006T*** aircraft.

LH and RH AUX FIELDS, enabling the converter box operations for Special Mission purposes, should be kept OFF during take-off, climb, landing and any abnormal procedure that affects electrical generating system (including single engine operation):

NOTE

Safety provisions, as following described, automatically disengage the LH and RH AUX FIELDS in case of one main field malfunction (i.e. for OEI). Also, if only one AUX FIELD switch is ON, the converter box is not powered.

1.1. NORMAL OPS GENERAL RECOMMENDATIONS

The following points should be always brought to attention to pilot/instructor/operator when operating a Tecnam aircraft equipped with variable pitch propeller:

1. *Propeller governor ground check.*

As prescribed by the propeller/governor manufacturer, a drop of 400/500 propeller RPM should be produced during this check. Its aim is to confirm the governor efficiency, not its complete feathering function.

Especially during the first cycle of propeller lever pulling, the governor tendency is to respond to the input with consistent delay, causing the pilot to continue moving back the propeller lever until an abrupt RPM change is observed. This causes an excessive drop in propeller speed that may reach up to 800 RPM in some cases and, consequently, a drop of up to 2000 engine shaft RPM. The long term result is a major wear of engine gearbox, bushings and pistons. In some cases, it may also result in detonation.

In order to avoid these long term adverse effects, the governor ground check should be performed by slowly and gently pulling the propeller lever. The purging cycle should be repeated 3 times, making sure that the governor closely and firmly controls the rpm.

The following recommendations have to be followed during the test:

- *propeller speed drops shall be of 400/500 propeller RPM*
- ***the cycle shall be repeated 3 times***
- ***the pilot shall be ready to push the propeller lever if a drop of >500 RPM is recorded***

2. Power changes.

When power setting changes are required in any flight condition, remember the following correct procedure:

Power increase = FIRST Prop THEN Map

Power reduction = FIRST Map THEN Prop

3.10 CRUISE

1 LH and RH Propeller Lever *SET to 1900-2250 RPM*

CAUTION

Throttles MAP decrease should be made before propeller speed reduction below 2200 RPM, as, contrariwise, Propeller Lever increase RPM should be set before engine Throttle Levers are advanced.

2 Engine parameters check (LH and RH)

- Oil temperature: *90° - 110 ° C*
  (or 50° - 130° C, if MOD2006/002 is applied)
- CHT / CT: *50° - 135° / 50° - 120 °C*
- Oil pressure: *2 - 5 bar.*
- Fuel pressure: *2.2 – 5.8 psi*
  **2.2 – 7.26 psi (0.15 – 0.50 bar)*

**applicable for fuel pump part no.893110 and no.893114*

3 Carburettor heat as needed *(see also instructions addressed on Section 3*

WARNING

Deselect and do not use Auto Pilot if possible icing condition area is inadvertently entered.

4 Fuel balance and crossfeed *check as necessary*

NOTE

To evaporate possibly accumulated condensation water, once per flight day (for approximately 5 minutes) 100° C (212° F) oil temperature must be reached.

3.10.1 CONVERTER BOX TURN ON

1	LH and RH AUX FIELD	*ON*
2	Converter Box	*Check enabled (no fail lamps)*
3	Mission systems	*Use as required*

3.10.2 CONVERTER BOX TURN OFF

1	Mission systems	*Shut down as necessary*
2	LH and RH AUX FIELD	*OFF*
3	Green lamps on switch panel	*Check OFF*

3.11 TURBULENT AIR OPERATION

In keeping with good operating practice used in all aircraft, it is recommended that when turbulent air is encountered or expected, the airspeed be reduced to maneuvering speed to reduce the structural loads caused by gusts and to allow for inadvertent speed build-ups, which may occur as a result of the turbulence or of distractions caused by the conditions.

3.12 DESCENT AND APPROACH

1	Propellers	*As required*
NOTE	*In order to control engine cooling and life, it is preferable to descend with power above idle and RPM lower than full continuous.*	
2	Carburettors heat	*As required*
3	Altimeter setting	*QNH set and crosscheck*
4	Rear passengers seats	*Set at full aft position*

3.13 BEFORE LANDING

1	Rear passengers seats	*Seats set at full aft and lower position*
2	LH and RH Electrical Fuel pump	*BOTH ON*
3	On downwind leg:	

MTOW 1180kg	MTOW 1230 kg
V_{FE}= 119KIAS	V_{FE}=122KIAS

Flaps T/O

4	Speed below applicable VLO/VLE	*Landing gear control knob - DOWN – Check green lights ON*
5	Carburettors heat	*CHECK OFF*
6	LH and RH Propeller Lever	*FULL FORWARD*
7	On final leg: speed below 93 KIAS	*Flaps FULL*
8	Final Approach Speed	

MTOW 1180kg	MTOW 1230 kg
V_{APP}= 70KIAS	V_{APP}=71KIAS

9	Landing and taxi light	*ON*
10	Touchdown speed	*65 KIAS*

Supplement G23: pages replacement instructions

SECTION 5 – PERFORMANCE

Apply following instruction:

See Basic AFM - Section 5

NOTE

Usually, the Special Mission Platform P2006T is also equipped with holes in the cabin and/or tailcone, ready for third parties sensor's integration. While the Tecnam intent is to offer a platform ready for sensors' integration, it is end-user responsibility to receive the approval from authority for each equipment installation, including the supplement of Section 5, should the equipment affect it (i.e. protruding cameras).

INTENTIONALLY LEFT BLANK

Supplement G23: pages replacement instructions

SECTION 6 – WEIGHT AND BALANCE

Apply following instruction:

See Basic AFM - Section 6

INTENTIONALLY LEFT BLANK

Supplement G23: pages replacement instructions

SECTION 7 – AIRFRAME AND SYSTEMS DESCRIPTION

Apply following pages replacement procedure:

Supplement G23 - AIRFRAME AND SYSTEMS DESCRIPTION page		Supplement G19 Section 7 page
SSMP7 – 39	**REPLACE**	Page S7 – 39 of Supplement G19, Section 7
SSMP7 – 42 thru 46	**REPLACE**	Page S7 – 42 thru 46 of Supplement G19, Section 7

INTENTIONALLY LEFT BLANK

19. ELECTRICAL SYSTEMS

Primary DC power is provided by two engine-driven alternators which, during normal operations, operate in parallel.

Each alternator is rated at 14,2-14,8 VDC, 70 Amp, and it is fitted with an external voltage regulator, which acts to maintain a constant output voltage, and with an automatic overvoltage device protecting the circuits and the electric components from an excessive voltage caused by alternator failures.

The power rating of the each alternator is such that if one alternator fails the other one can still supply the airplane equipment to maintain flight safety.

Secondary DC power is provided by a battery (lead type - Gill Teledyne G35, 12 V, 23-Ah in 1h run time) and an external DC power source can be connected to the aircraft DC distribution system.

On the instruments panel, right side, it is installed a voltmeter/ammeter. The ammeter section can indicate the current supplied by either left or right alternator switching a dedicated selector.

There are five different busses (make reference to Figure 11):

- Battery bus
- LH Alternator bus
- RH Alternator bus
- LH Avionic bus
- RH Avionic bus

The distribution system operates as a single bus with power being supplied by the battery and both alternator but it is possible to separate the left busses from the right busses when required by means of the Cross Bus switches.

All electrical loads are divided among the five busses on the basis of their importance and required power: equipment with duplicate functions are connected to separate busses.

The Battery bus, which supplies the most important loads, is energized from three sources: the battery and both alternator. This allows the bus for remaining active also in case of two independent faults in the supply paths.

When both generators are correctly operating and all above mentioned switches are in ON position, all the busses are connected to the generators.

The ignition switches, two for each engine and grouped on the over head panel, are instead independent from the airplane electrical system (generation and distribution); they only control and open the engine electrical circuit.

WARNING

If ignition switches are turned ON, a propeller movement can cause the engine starting with consequent hazard for people nearby.

19.1 MISSION POWER CONTROL

When the airplane embodies the design change "Power supply from built-in generators", the Rotax engine built-in generators are enabled in order to supply power to two available bus bars.

Each built-in generator is activated by means of a switch (LH and RH AUX FIELD) located on the LH breakers rack where are located also the breakers related to the auxiliary power generation system.

The light (switch built-in light) indicates that the electrical power is being generated.

The below figure presents the control panel for the built-in generators which in turn activate the converter box:

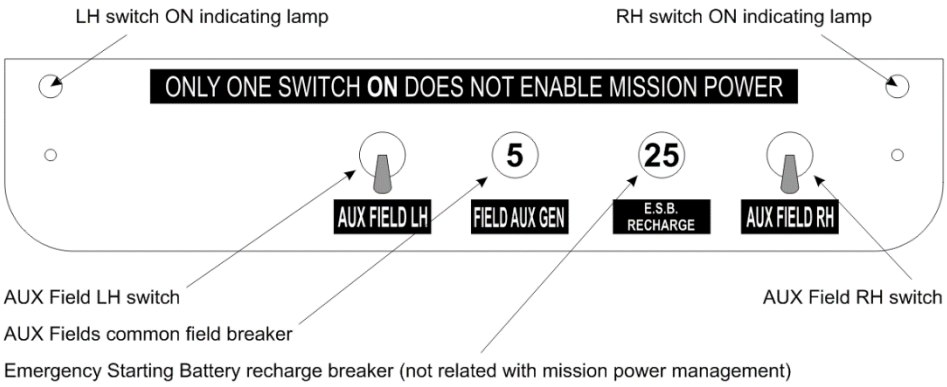

Switches panels

Next paragraph describes the converter and connector box installed in the P2006T baggage compartment floor. This box allows the operator to have a source of 28Volt/40Amp electrical power for different mission equipment.

19.1.1 CONVERTER BOX

The following points illustrate how the converter box works:

1. A closed, light alloy made box incorporates 4x converters Ameri-King AK-550-12, each one capable of 12Amp/28VDC output using a 14VDC input;
2. Each converter is fed by one different power generation:
   - 20Amp coming directly from the LH aux generator bus;
   - 20Amp coming directly from the RH aux generator bus;
   - 30Amp coming from the LH external alternator bus;
   - 30Amp coming from the RH external alternator bus;
3. Each converter is protected with circuit breakers on the INPUT and OUTPUT sides;
4. The 30Amp current coming from the LH and RH external alternators is the amount of power surplus available due to the 2006/202 design change;
5. The same switches shown in the MOD2006/046 and reported in the figure above enable the relays that feed the converters;
6. Four relays enable the external power to feed also the converter box for ground test purposes, when external socket is connected;
7. A connector box allows the end user to have a maximum current of 40Amp at 28VDC available (1120W).

NOTE

When using the ground power unit to test on-ground the mission equipment, remember that:

- *14VDC GPU only can be used, as done on standard P2006T.*
- *the minimum GPU capacity to properly feed mission equipment should be at least 150Amp @14VDC*
- *The FIELD AUX switches needs to be "ON" to test converter box connected equipment, "OFF" to test the aircraft avionics*

NOTE

When connecting mission equipment to the system please note tha the amount of current provided depends on engine rpm setting. The maximum electrical power is available from 1.900rpm on.

In the following figures the new Electrical system schematic is reported.

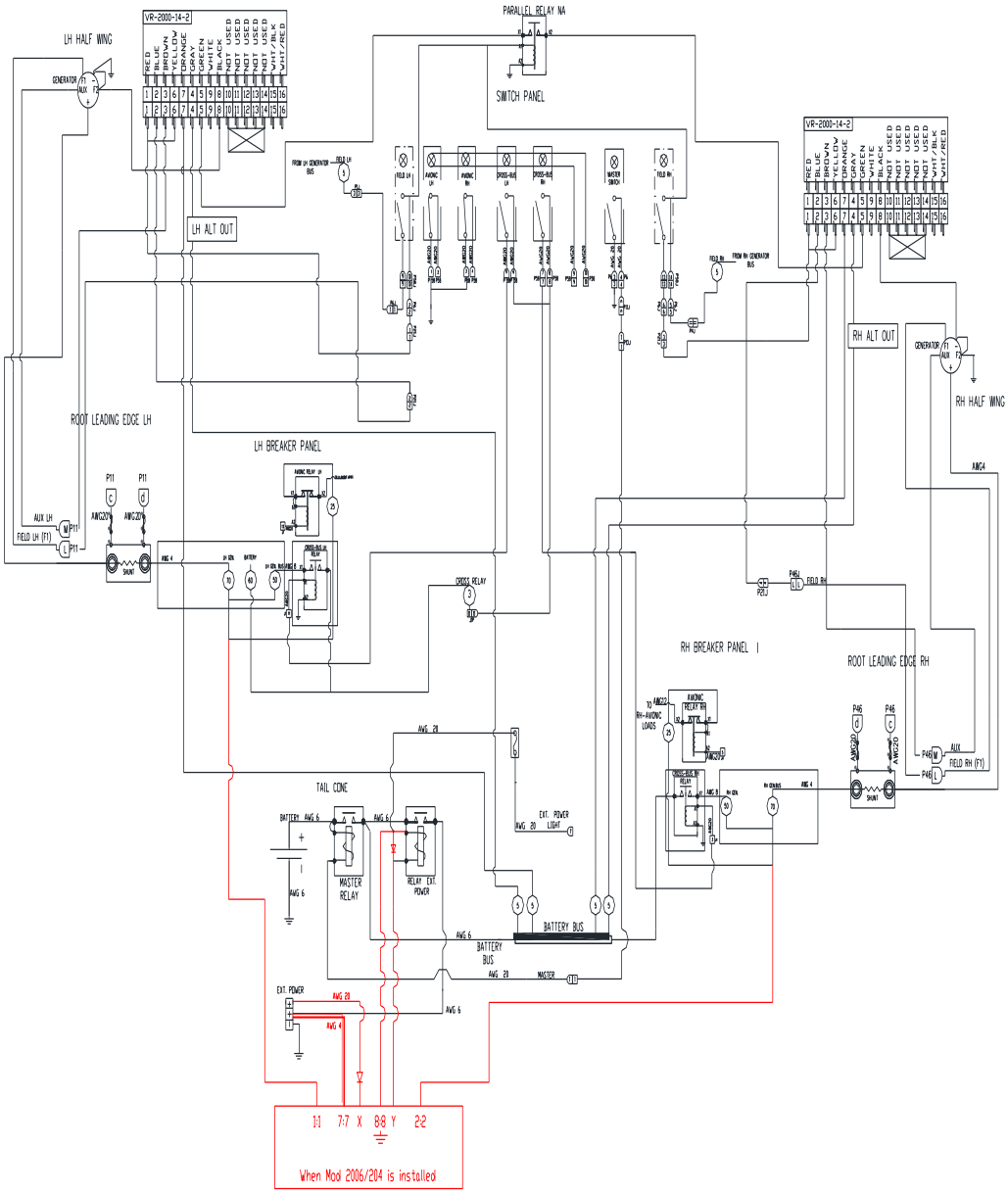

Electrical system schematic (Page 1)

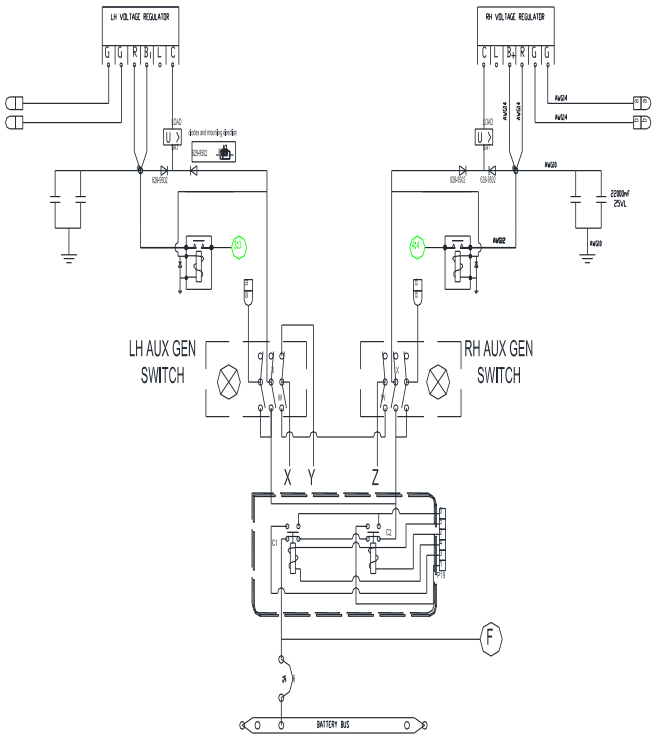

Figure 25 – Electrical system schematic (Page 2)

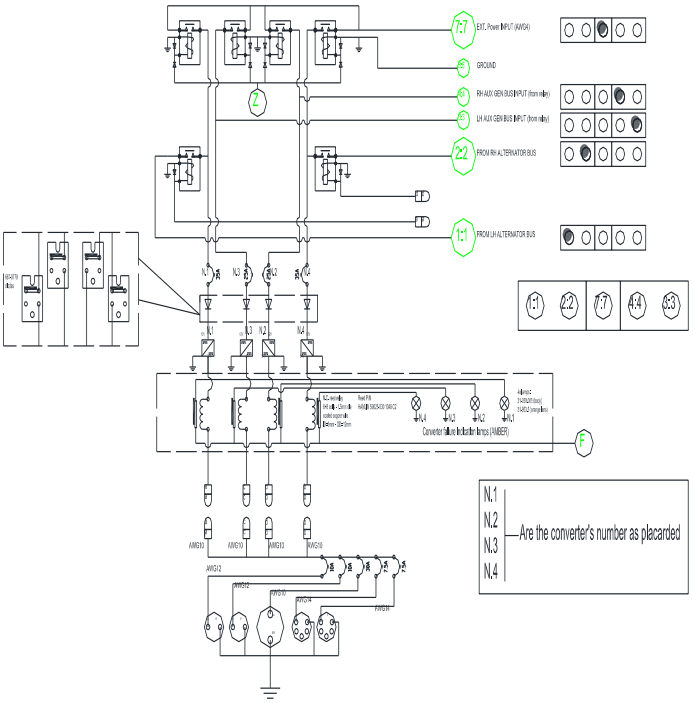

Electrical system schematic (Page 3)

INTENTIONALLY LEFT BLANK

Supplement G23: pages replacement instructions

SECTION 8 – GROUND HANDLING & SERVICE

Apply following instruction:

See Basic AFM - Section 8

INTENTIONALLY LEFT BLANK

SUPPLEMENT NO. G24

TABI-1800 SENSOR

RECORD OF REVISIONS

Rev	Revised page	Description of Revision	Tecnam Approval			EASA Approval Or Under DOA Privileges
			DO	OoA	HDO	
0	-	First issue	A. Sabino	D. Ronca	M. Oliva	Approved under the authority of DOA ref. EASA.21J.335 MOD2006/363.190620
1	G24-1, 2 G24-58	Updated RoR and LOEP Relocation of informations	A. Glorioso	D. Ronca	M. Oliva	Approved under the authority of DOA ref. EASA.21J.335 MOD2006/380.191111
-	-	-	-	-	-	-

LOEP

Pages	Revision
G24 – 3, 4, 6 thru 10	*Rev. 0*
G24-1, 2, 5	*Rev. 1*

INTRODUCTION

This section contains supplemental information to operate, in a safe and efficient manner, the aircraft when equipped with TABI-1800 sensor.

The information contained herein supplements or supersedes the basic Aircraft Flight Manual.

It is the owner's/operator's responsibility to replace the mentioned pages in the AFM in accordance with the instructions herein addressed section by section.

SECTION 1 GENERAL

This modification allows to connect the mission system (TABI-1800 sensor suite and related LRUs) to the dedicated mission power system, when MOD2006/204 modification is implemented. This design change MOD2006/204 must be implemented in the aircraft prior to carry out the TABI-1800 installation.

MOD2006/204 is explained in further detail in the following pages to show the main differences between a P2006T aircraft without and with this MOD2006/204 modification implemented.

The standard P2006T (without MOD2006/204) and all its systems operate with 14V tension, which is made available via 2 x 40A alternators. The internal Rotax 912S (engines equipping the aircraft) are normally not activated or they only feed the engine starting battery re-charge.
P2006T, when incorporating MOD2006/204, includes the following main differences:

a) External alternators are 2 x 70A instead of 2 x 40A, still operating with 14 VDC tension output.
b) Internal generators, 2 x 20A at 14V DC are enabled.
c) Given that the aircraft systems and avionics still needs 2 x 40 A, there is an overall power surplus of 2 x 30A + 2 x 20A at 14V or 100A at 14V DC in total.
d) The surplus power is directed to a converter box, shown in the next picture and installed inside the baggage compartment, whose role is to convert the 4 separate inputs from 14V DC to 28V DC, regulate it and make it available for mission purposes.
e) The converter box also converts power coming from 14V DC Ground power unit for mission system ground check.
f) The converter box features 4x KGS RH28 converters having up to 90% conversion efficiency.
g) Even considering 80% of conversion efficiency, the total power available for mission equipment is:

40Amp @ 28VDC

h) Peak power can be sustained by converters as well as by all protection CB, and the entire system is capable to work with TABI-1800.
i) Converter box also features 4 lamps, each one dedicated to a converter and indicating its failure.

   NOTE: one or more lamp illuminating could also indicate that the corresponding converter is delivering a power of less than 4Amp, thus in case of very low power consumption, one or more lamp could remain illuminated

j) Internal relays are excited by the mission system switches, which is the only control for the pilot to start the mission power. If one or both MAIN FIELD (alternators) does not work, or it is in OFF position, the mission power is automatically cut off as safety provision (i.e. in case of OEI conditions).

SECTION 2 LIMITATIONS

Refer to the basic AFM

SECTION 3 EMERGENCY PROCEDURES

OPERATION DURING SINGLE ENGINE

During single engine operations:

- TABI-1800 sensor must be deactivated;
- LH and RH AUX FIELD (mission power) switches must be kept BOTH OFF.

NOTE *TABI-1800 sensor must be used in accordance to the applicable operation manual, PN 360036-02*

SECTION 4 NORMAL PROCEDURES

Failure indicating lamps

If main alternators are properly generating, and AUX FIELD (mission power) switches are BOTH ON, the power flows inside the converters and then, on a common bus, a 28V power is made available via multiple connectors. Each output of converters is connected to four coils (one for each converter) internally provided by reed (magnetic normally open switch). The reed are therefore normally closed when the converter works properly, while in case of failure of converter, the reed change its state and the lamp connected to it turns on. The lamps (one for each converter), give information about the state of the converters.

In case there is a very low power consumption from the mission system (i.e. 10Amp), every converter manages only 2,5Amp and this low current could not be able to generate a magnetic field sufficient to turn the failure lamp OFF. Therefore, in case of very low power consumption, one or more failure indicating lamp could remain illuminated.

The malfunction of one or more converters does not involve the mission abort, if the remaining converters can sustain the request of the load. Each of the 4 converters can autonomously sustain 10A/28VDC maximum load. As an example, if the mission system demand is for 20 A, only 2 converters can feed it properly. In case of engine or alternator failure, the converter box power is automatically cut off, overvoltage protections are provided.

ON GROUND OPERATIONS WITH 12-14 VDC GPU CONNECTED

In order to check mission system works properly follow the next steps:

1) Verify Master is OFF
2) Verify BOTH FIELD (LH and RH) are OFF
3) Verify BOTH CROSS BUS (LH and RH) are OFF
4) Verify BOTH AVIONIC (LH and RH) are OFF
5) Verify BOTH AUX FIELD (LH and RH) are OFF
6) Verify that GPU is, at least, able to provide 100A at 14 VDC or an adequate power once it is converted to the sensor needs

CAUTION

Never use a 28 VDC GPU on P2006T airplane

7) Plug in the 14V GPU to the external power socket
8) The aircraft avionics should start (NOTE: In this condition, aircraft battery is not re-charged by GPU)
9) Switch AUX FIELD RH ON
10) Switch AUX FIELD LH ON
11) Aircraft avionics should power OFF and the converter box is now ready to feed mission system for ground checks (NOTE: In this condition, the converter failure indicating lamps are not powered)
12) Perform additional verification according to the following table:

WITH GPU CONNECTED TO EXTERNAL POWER SOCKET...						
...if you want to...				...you need to operate the following switches		
Test Aircraft Avionics	Test Mission equip. only	Charge a/c Battery	Test converter Failure lamps	MASTER	CROSS BUS (LH, RH or BOTH)	AUX LH and RH
✓	X	X	X	OFF	OFF	OFF
✓	X	✓	X	ON	OFF	OFF
X	✓	X	X	OFF	OFF	ON
✓	✓	✓	✓	ON (note1)	ON	ON

NOTE1: To avoid converter box relays tripping, the following sequence is needed to test the converter failure indicating lamps:

1) AUX RH switch ON
2) AUX LH switch ON
3) BOTH CROSS BUS ON
4) MASTER ON

The reverse procedure can be used to stop the ground check.

OPERATIONS DURING FLIGHT (WITH ENGINES RUNNING)

With engines running (in flight or ground) the mission power system works only if the MASTER is ON, BOTH FIELD LH and RH are ON and both main alternators are correctly generating power. If these conditions are satisfied, the mission power is activated through the "AUX LH and AUX RH" switches.

Start mission power in flight

1) Verify that MASTER is ON
2) Verify that FIELD LH is ON and left alternator is generating power (no LH ALT FAIL on MFD)
3) Verify that FIELD RH is ON and left alternator is generating power (no RH ALT FAIL on MFD)
4) Recommended minimum RPM before mission power switches ON = 1500
5) AUX FIELD LH – switch ON
6) AUX FIELD RH – switch ON
7) Power start to flow into converter box. If the overall mission needed power is more than 25 A, all converter box lamps should de-illuminate.

NOTE

When operating mission equipment with a low power demand, it is likely that only one failure indicating lamp will de-illuminate or flashes. This happens because the current flow in the remaining failure lamps circuits is not sufficient to power the coils around the reed switches that open the line to the lamps.

To switch off mission power in flight (or with engines running)

1) Make sure the mission suite is switched OFF by the mission operator
2) AUX FIELD RH – switch OFF
3) AUX FIELD LH – switch OFF

Next figure shows the mission power control panel layout.

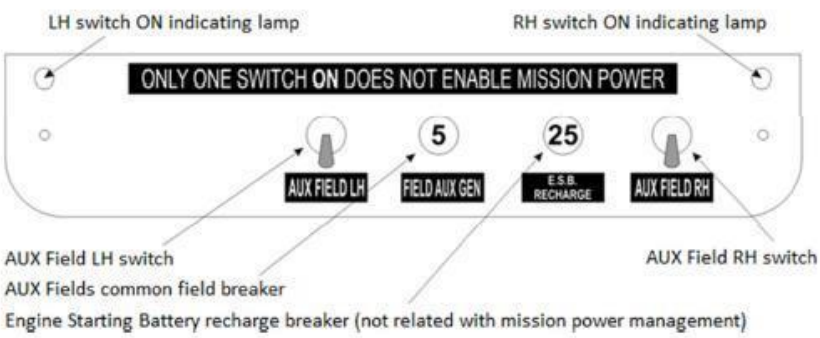

POST FLIGHT OPERATIONS

No change to procedures set forth in aircraft flight manual.

NOTE

It is suggested to power OFF mission power system (AUX LH and AUX RH BOTH OFF) when engines are still above 1500 RPM. Mission equipment should be switched OFF before the engine shut down. Keeping mission suite ON with engines at low rpm or in idle could cause drop of tension, mid-term damages to the converters and mission system shutdown

SECTION 5 PERFORMANCE

Refer to the basic AFM for loading procedures.

SECTION 6 WEIGHT AND BALANCE

Refer to the basic AFM.

SECTION 7 AIRFRAME AND SYSTEMS DESCRIPTION

Refer to the basic AFM, plus the following information. For a detailed description of the equipment operation, see the applicable operation manual, PN 360036-02.

ELECTRIC SYSTEM

TABI-1800 system's core components are shown in the picture below.

TABI-1800

Sensor Head Unit

SHU features an integrated instrument control unit. All data recording, management, operator input and control functions, and power distribution occur in this enclosure.

POS AV

Position & Attitude Sensor

GPS receiver, integrated within its rack-mountable computer. Its GPS antenna is mounted on the roof of the aircraft.

Monitor & Keyboard

(Monitor may differ)

For operator's management of mission system. They must be properly stowed and secured during Take-Off and Landing

NOTE *Items in the aircraft that are not permanently secured (e.g. the keyboard) should have a secure location to hold them during take-off and landing.*

The system's connection to the aircraft dedicated 28 VDC power supply and its architecture are shown in the figure below:

TABI-1800 Cabling Diagram

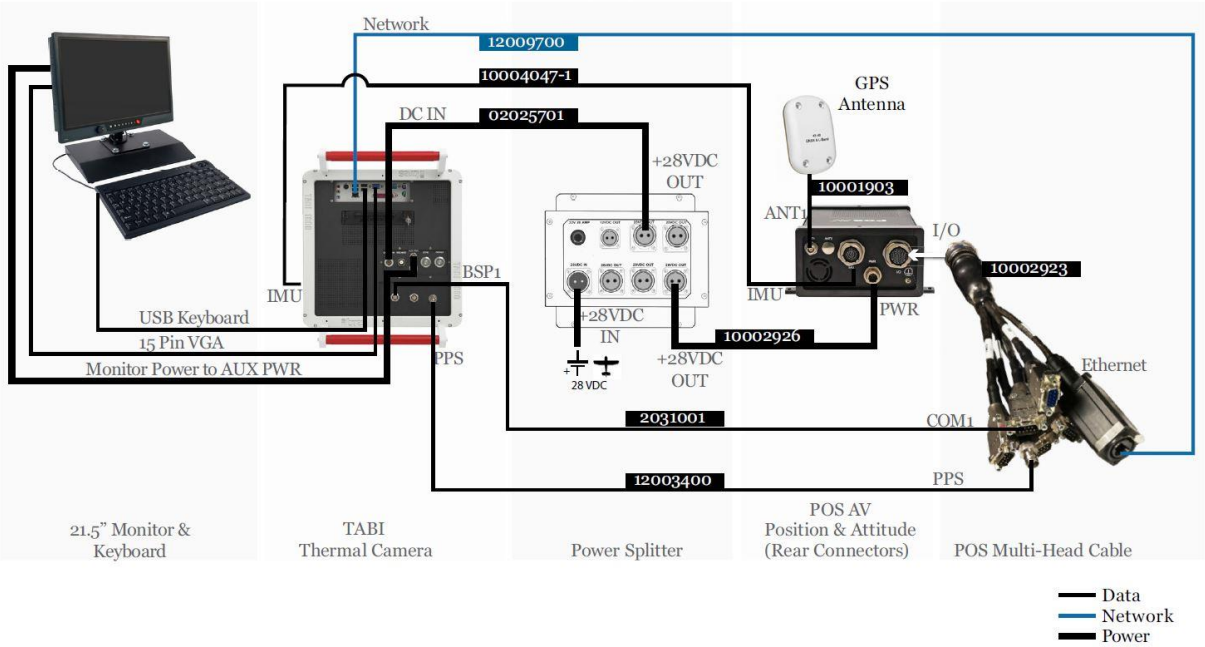

The maximum required power supply is:

- 11A for the TABI-1800 alone;
- 16A for the TABI-1800, POS AV and navigation system together.

NOTE

A laptop controller is often used with the integrated GPS/IMU system. This typically operates using 110 Volts AC. To obtain this from an aircraft which supplies +12 or +28 Volts DC entails additional equipment. One practical possibility is to provide a VDC to VAC Adaptor. Note that 28-110VDC converter is not part of the approved configuration and should be managed with separate approval process

SECTION 8 GROUND HANDLING & SERVICE

Refer to the basic AFM.

SUPPLEMENT NO. G25

PHASE ONE 190MP AERIAL SYSTEM

RECORD OF REVISIONS

Rev	Revised page	Description of Revision	Tecnam Approval			EASA Approval Or Under DOA Privileges
			DO	OoA	HDO	
0	1-11	First issue	L. De Martino (OJT) Fabio Russo	D. Ronca	M. Oliva	Approved under the authority of DOA ref. EASA.21J.335 MOD2006/373.191023
1	G25-1,2,3,6,7,8, 12,13	Typo errors. Normal procedures optimization. Update of system description.	L. De Martino	D. Ronca	M. Oliva	Approved under the authority of DOA ref. EASA.21J.335 MOD2006/389.200303

LOEP

Pages	Revision
G25 – 4,5,10,11	*Rev. 0*
G25 – 1,2,3,6,7,8,9,11,12,13	*Rev. 1*

INTRODUCTION

This section contains supplemental information to operate, in a safe and efficient manner, the aircraft when equipped with Phase One 190MP Aerial System.

The information contained herein supplements or supersedes the basic Aircraft Flight Manual.

SECTION 1 GENERAL

This modification allows to connect the mission system (Phase One 190MP Aerial System and related LRUs) to the dedicated mission power system, when MOD2006/204 modification is implemented. This design change MOD2006/204 must be implemented in the aircraft prior to carry out the Phase One 190MP Aerial System installation.

The standard P2006T (without MOD2006/204) and all its systems operate with 14V tension, which is made available via 2 x 40A alternators. The internal Rotax 912S (engines equipping the aircraft) are normally not activated or they only feed the engine starting battery re-charge.
P2006T, when incorporating MOD2006/204, includes the following main differences:

a) External alternators are 2 x 70A instead of 2 x 40A, still operating with 14 VDC tension output.
b) Internal generators, 2 x 20A at 14V DC are enabled.
c) Given that the aircraft systems and avionics still needs 2 x 40 A, there is an overall power surplus of 2 x 30A + 2 x 20A at 14V or 100A at 14V DC in total.
d) The surplus power is directed to a converter box, shown in the next picture and installed inside the baggage compartment, whose role is to convert the 4 separate inputs from 14V DC to 28V DC, regulate it and make it available for mission purposes.
e) The converter box also converts power coming from 14V DC Ground power unit for mission system ground check.
f) The converter box features 4x KGS RH28 converters having up to 90% conversion efficiency.
g) Even considering 80% of conversion efficiency, the total power available for mission equipment is: **40Amp @ 28VDC**

h) Peak power can be sustained by converters as well as by all protection CB, and the entire system is capable to work with Phase One 190MP Aerial System.
i) Converter box also features 4 lamps, each one dedicated to a converter and indicating its failure.

   NOTE: one or more lamp illuminating could also indicate that the corresponding converter is delivering a power of less than 4Amp, thus in case of very low power consumption, one or more lamp could remain illuminated

j) Internal relays are excited by the mission system switches, which is the only control for the pilot to start the mission power. If one or both MAIN FIELD (alternators) does not work, or it is in OFF position, the mission power is automatically cut off as safety provision (i.e. in case of OEI conditions).

SECTION 2 LIMITATIONS

Refer to the basic AFM.

SECTION 3 EMERGENCY PROCEDURES

During single engine operations:

- Phase One 190MP Aerial System must be deactivated;
- LH and RH AUX FIELD (mission power) switches must be kept BOTH OFF.

NOTE *Phase One 190MP Aerial System must be used in accordance to the applicable operation manual*

No additional emergency procedure is imposed by this installation since mission system power is automatically cut off as safety provision in case of at least one alternator (both main or aux) failure.

Failure indicating lamps status

Each output of converters is connected to four coils (one for each converter) internally provided by reed (magnetic normally open switch). The reed are therefore normally closed when the converter works properly, while in case of failure of converter, the reed change its state and the lamp connected to it turns on. The lamps (one for each converter), give information about the state of the converters. Failure indicating lamps could be on for one the following causes:

- malfunction of one or more converters;
- low power consumption:
  in case of a very low power consumption from the mission system (i.e. 10Amp), every converter manages only 2,5Amp and this low current could not be able to generate a magnetic field sufficient to turn the failure lamp OFF.

The malfunction of one or more converters does not involve the mission abort, if the remaining converters can sustain the request of the load. Each of the 4 converters can autonomously sustain 10A/28VDC maximum load. As an example, if the mission system demand is for 20 A, only 2 converters can feed it properly. In case of engine or alternator failure, the converter box power is automatically cut off, overvoltage protections are provided.

SECTION 4 NORMAL PROCEDURES

If main alternators are properly generating, and AUX FIELD (mission power) switches are BOTH ON, the power flows inside the converters and then, on a common bus, a 28V power is made available via multiple connectors.

ON GROUND OPERATIONS WITH 12-14 VDC GPU CONNECTED

In order to check mission system works properly follow the next steps:

1) Verify Master is OFF
2) Verify BOTH FIELD (LH and RH) are OFF
3) Verify BOTH CROSS BUS (LH and RH) are OFF
4) Verify BOTH AVIONIC (LH and RH) are OFF
5) Verify BOTH AUX FIELD (LH and RH) are OFF
6) Verify that GPU is, at least, able to provide 100A at 14 VDC or an adequate power once it is converted to the sensor needs

CAUTION

Never use a 28 VDC GPU on P2006T airplane

7) Switch AUX FIELD RH ON
8) Switch AUX FIELD LH ON
9) Plug in the 14V GPU to the external power socket
10) The converter box is now ready to feed mission system for ground checks (NOTE: In this condition, the converter failure indicating lamps are not powered)
11) Perform additional verification according to the following table:

WITH GPU CONNECTED TO EXTERNAL POWER SOCKET...						
...if you want to...				...you need to operate the following switches		
Test Aircraft Avionics	Test Mission equip. only	Charge a/c Battery	Test converter Failure lamps	MASTER	CROSS BUS (LH, RH or BOTH)	AUX LH and RH
✓	X	X	X	OFF	OFF	OFF
✓	X	✓	X	ON	OFF	OFF
X	✓	X	X	OFF	OFF	ON
✓	✓	✓	✓	ON (note1)	ON	ON

NOTE1: To avoid converter box relays tripping, the following sequence is needed to test the converter failure indicating lamps:

1) AUX RH switch ON
2) AUX LH switch ON
3) Plug in the 14V GPU to the external power socket
4) BOTH CROSS BUS ON
5) MASTER ON

The reverse procedure can be used to stop the ground check.

OPERATIONS DURING FLIGHT (WITH ENGINES RUNNING)

With engines running (in flight or ground) the mission power system works only if the MASTER is ON, BOTH FIELD LH and RH are ON and both main alternators are correctly generating power. If these conditions are satisfied, the mission power is activated through the "AUX LH and AUX RH" switches.

Start mission power in flight

1) Verify that MASTER is ON
2) Verify that FIELD LH is ON and left alternator is generating power (no LH ALT FAIL on MFD)
3) Verify that FIELD RH is ON and left alternator is generating power (no RH ALT FAIL on MFD)
4) Recommended minimum RPM before mission power switches ON = 1500
5) AUX FIELD LH – switch ON
6) AUX FIELD RH – switch ON
7) Power start to flow into converter box. If the overall mission needed power is more than 25 A, all converter box lamps should de-illuminate.

NOTE

When operating mission equipment with a low power demand, it is likely that only one failure indicating lamp will de-illuminate or flashes. This happens because the current flow in the remaining failure lamps circuits is not sufficient to power the coils around the reed switches that open the line to the lamps.

To switch off mission power in flight (or with engines running)

1) Make sure the mission suite is switched OFF by the mission operator
2) AUX FIELD RH – switch OFF
3) AUX FIELD LH – switch OFF

The figure in the next page shows the mission power control panel layout.

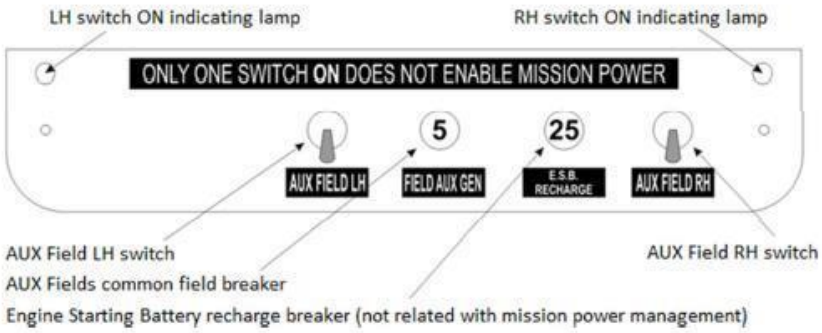

+

POST FLIGHT OPERATIONS

No change to procedures set forth in aircraft flight manual.

NOTE

It is suggested to power OFF mission power system (AUX LH and AUX RH BOTH OFF) when engines are still above 1500 RPM. Mission equipment should be switched OFF before the engine shut down. Keeping mission suite ON with engines at low rpm or in idle could cause drop of tension, mid-term damages to the converters and mission system shutdown

SECTION 5 PERFORMANCE

Refer to the basic AFM.

SECTION 6 WEIGHT AND BALANCE

The following table contains the details about the mass position of the system in respect to the aircraft datum as in AFM (leading edge vertical).

Description	Weight [kg]	Arm [m]
Phase One 190MP aerial system & Support plate	35.9	0.01

Refer to the basic AFM for weight and balance procedures.

SECTION 7 AIRFRAME AND SYSTEMS DESCRIPTION

Refer to the basic AFM for the aircraft systems description.

ELECTRIC SYSTEM

In addition to basic equipment, the following unit is installed:

- Phase One 190MP Aerial System is shown in the picture below.

Phase One 190MP Aerial System

Sensor Head Unit

SHU features an integrated instrument control unit. All data recording, management, operator input and control functions, and power distribution occur in this enclosure. A GPS receiver is integrated within the rack-mounted computer. Its GPS antenna is mounted on the roof of the aircraft.

The system's is directly connected to the aircraft dedicated 28 VDC power supply.
The maximum required power supply is 6.5A.

In the following page, Phase One 190MP aerial system components are explained in more detail.

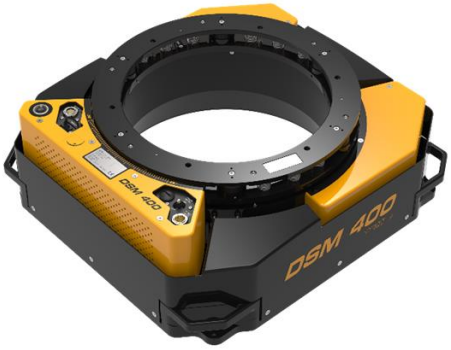

SOMAG DSM-400

Gyro Stabilization Mounts

The gyro stabilizer offers a usable mounting space of 270 mm and lifts a payload up to 35 kg and is designed to stabilize multiple medium format cameras and sensors.

Phase One iX Controller MK4

System Controller

Acting as a central hub to Phase One Aerial Systems, it controls the cameras, the gyro-stabilizing mount, the GNSS/IMU system, and runs iX Capture and iX Flight software. The iX Controller MK 4 includes an I/O port to enable accurate activation of multiple cameras by iX Flight, pre-installed on the iX Controller.

Phase One iXU-RS1900 4-Band

4-Band camera system

It features two CMOS sensors and two 90mm lenses for capturing RGB information. An additional 50 mm lens is equipped, for capturing NIR information, providing 4-Band (RGB, NIR) imagery.

Applanix POS AV 210

GPS receiver

In addition to Phase One 190MP Aerial System, the following item is installed

Beetronics 7” 4:3 display

Pilot’s mission monitor

For pilot support in maintaining precise trajectory for mission purposes.

SECTION 8 GROUND HANDLING & SERVICE

Refer to the basic AFM.

SUPPLEMENT NO. G26

LMS-Q680I AND PHASE ONE 4-BAND CAMERA SYSTEM INSTALLATION

RECORD OF REVISIONS

Rev	Revised page	Description of Revision	Tecnam Approval			EASA Approval Or Under DOA Privileges
			DO	OoA	HDO	
0	-	First issue	L. De Martino	D. Ronca	M. Oliva	Approved under the authority of DOA ref. EASA.21J.335 MOD2006/385.200220
-	-	-	-	-	-	-

LOEP

Pages	Revision
G26 – 1 through 15	*Rev. 0*

INTRODUCTION

This section contains supplemental information to operate, in a safe and efficient manner, the aircraft when equipped with MS-Q680i and Phase One 4-band camera system installation.

The information contained herein supplements or supersedes the basic Aircraft Flight Manual.

SECTION 1 GENERAL

This modification allows to connect the mission system (LMS-Q680i and Phase One 4-band camera system installation and related LRUs) to the dedicated mission power system, when MOD2006/204 modification is implemented. This design change MOD2006/204 must be implemented in the aircraft prior to carry out the LMS-Q680i and Phase One 4-band camera system installation.

The standard P2006T (without MOD2006/204) and all its systems operate with 14V tension, which is made available via 2 x 40A alternators. The internal Rotax 912S (engines equipping the aircraft) are normally not activated or they only feed the engine starting battery re-charge.
P2006T, when incorporating MOD2006/204, includes the following main differences:

a) External alternators are 2 x 70A instead of 2 x 40A, still operating with 14 VDC tension output.
b) Internal generators, 2 x 20A at 14V DC are enabled.
c) Given that the aircraft systems and avionics still needs 2 x 40 A, there is an overall power surplus of 2 x 30A + 2 x 20A at 14V or 100A at 14V DC in total.
d) The surplus power is directed to a converter box, shown in figure 1 and installed inside the baggage compartment, whose role is to convert the 4 separate inputs from 14V DC to 28V DC, regulate it and make it available for mission purposes.
e) The converter box also converts power coming from 14V DC Ground power unit for mission system ground check.
f) The converter box features 4x KGS RH28 converters having up to 90% conversion efficiency.
g) Even considering 80% of conversion efficiency, the total power available for mission equipment is: **40Amp @ 28VDC**

h) Peak power can be sustained by converters as well as by all protection CB, and the entire system is capable to work with mission equipment.
i) Converter box also features 4 lamps, each one dedicated to a converter and indicating its failure.

   NOTE: one or more lamp illuminating could also indicate that the corresponding converter is delivering a power of less than 4Amp, thus in case of very low power consumption, one or more lamp could remain illuminated

j) Internal relays are excited by the mission system switches, which is the only control for the pilot to start the mission power. If one or both MAIN FIELD (alternators) does not work, or it is in OFF position, the mission power is automatically cut off as safety provision (i.e. in case of OEI conditions).

Each output of converters is connected to four coils (one for each converter) internally provided by reed (magnetic normally closed switch). The reed are therefore normally open when the converter works properly, while in case of failure of converter, the reed change its state and the lamp connected to it turns on.

The lamps (one for each converter), give information about the state of the converters. Failure indicating lamps could be on for one the following causes:

- malfunction of one or more converters;
- low power consumption:
  in case of a very low power consumption from the mission system (i.e. 10Amp), every converter manages only 2,5Amp and this low current could not be able to generate a magnetic field sufficient to turn the failure lamp OFF.

The malfunction of one or more converters does not involve the mission abort, if the remaining converters can sustain the request of the load. Each of the 4 converters can autonomously sustain 10A/28VDC maximum load. As an example, if the mission system demand is for 20 A, only 2 converters can feed it properly. In case of engine or alternator failure, the converter box power is automatically cut off, overvoltage protections are provided.

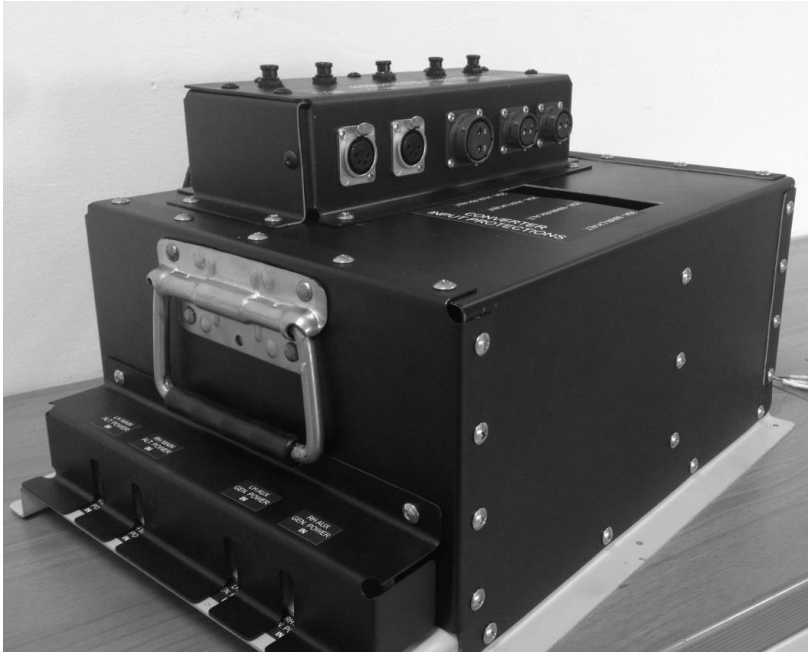

Figure 1 – Converter Box

SECTION 2 LIMITATIONS

Refer to the basic AFM.

SECTION 3 EMERGENCY PROCEDURES

No additional emergency procedure is imposed by this installation since mission system power is automatically cut off as safety provision in case of at least one alternator (both main or aux) failure.

SECTION 4 NORMAL PROCEDURES

If main alternators are properly generating, and AUX FIELD (mission power) switches are BOTH ON, the power flows inside the converters and then, on a common bus, a 28V power is made available via multiple connectors.

ON GROUND OPERATIONS WITH 12-14 VDC GPU CONNECTED

In order to check mission system works properly follow the next steps:

1) Verify Master is OFF
2) Verify BOTH FIELD (LH and RH) are OFF
3) Verify BOTH CROSS BUS (LH and RH) are OFF
4) Verify BOTH AVIONIC (LH and RH) are OFF
5) Verify BOTH AUX FIELD (LH and RH) are OFF
6) Verify that GPU is, at least, able to provide 100A at 14 VDC or an adequate power once it is converted to the sensor needs

CAUTION

Never use a 28 VDC GPU on P2006T airplane

7) Switch AUX FIELD RH ON
8) Switch AUX FIELD LH ON
9) Plug in the 14V GPU to the external power socket
10) The converter box is now ready to feed mission system for ground checks (NOTE: In this condition, the converter failure indicating lamps are not powered)
11) Perform additional verification according to the following table:

WITH GPU CONNECTED TO EXTERNAL POWER SOCKET...						
...if you want to...				...you need to operate the following switches		
Test Aircraft Avionics	Test Mission equip. only	Charge a/c Battery	Test converter Failure lamps	MASTER	CROSS BUS (LH, RH or BOTH)	AUX LH and RH
✓	X	X	X	OFF	OFF	OFF
✓	X	✓	X	ON	OFF	OFF
X	✓	X	X	OFF	OFF	ON
✓	✓	✓	✓	ON (note1)	ON	ON

NOTE1: To avoid converter box relays tripping, the following sequence is needed to test the converter failure indicating lamps:

1) AUX RH switch ON
2) AUX LH switch ON
3) Plug in the 14V GPU to the external power socket

4) BOTH CROSS BUS ON
5) MASTER ON

The reverse procedure can be used to stop the ground check.

OPERATIONS DURING FLIGHT (WITH ENGINES RUNNING)

With engines running (in flight or ground) the mission power system works only if the MASTER is ON, BOTH FIELD LH and RH are ON and both main alternators are correctly generating power. If these conditions are satisfied, the mission power is activated through the "AUX LH and AUX RH" switches.

Start mission power in flight

1) Verify that MASTER is ON
2) Verify that FIELD LH is ON and left alternator is generating power (no LH ALT FAIL on MFD)
3) Verify that FIELD RH is ON and left alternator is generating power (no RH ALT FAIL on MFD)
4) Recommended minimum RPM before mission power switches ON = 1500 (or idle if mission equipment power expected is less than 20A)
5) AUX FIELD LH – switch ON
6) AUX FIELD RH – switch ON
7) Power start to flow into converter box.
8) Switch on mission equipment. If the overall mission needed power is more than 25 A, all converter box lamps should de-illuminate.
9) Switch on pilot mission monitor – adjust display brightness (no glare)
10) Verify that pilot mission monitor and relative cables do not interfere with flight control commands.

NOTE

When operating mission equipment with a low power demand, it is likely that only one failure indicating lamp will de-illuminate or flashes. This happens because the current flow in the remaining failure lamps circuits is not sufficient to power the coils around the reed switches that open the line to the lamps.

To switch off mission power in flight (or with engines running)

1) Make sure the mission suite is switched OFF by the mission operator
2) AUX FIELD RH – switch OFF
3) AUX FIELD LH – switch OFF

The figure in the next page shows the mission power control panel layout.

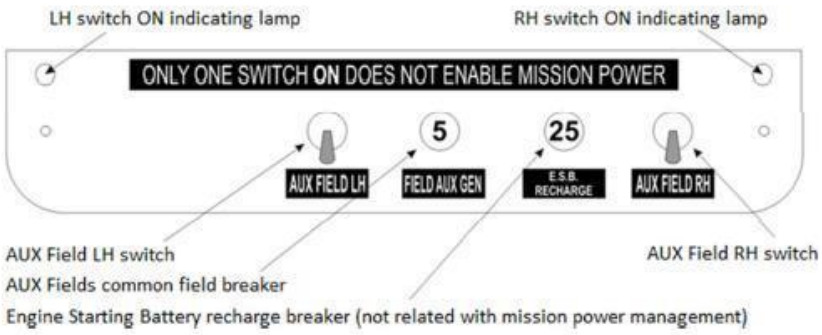

+

POST FLIGHT OPERATIONS

No change to procedures set forth in aircraft flight manual.

NOTE

It is suggested to power OFF mission power system (AUX LH and AUX RH BOTH OFF) when engines are still above 1500 RPM. Mission equipment should be switched OFF before the engine shut down. Keeping mission suite ON with engines at low rpm or in idle could cause drop of tension, mid-term damages to the converters and mission system shutdown. This does not apply if mission equipment power required is less than 20A.

SECTION 5 PERFORMANCE

Refer to the basic AFM.

SECTION 6 WEIGHT AND BALANCE

The following table contains the details about the mass position of the system in respect to the aircraft datum as in AFM (leading edge vertical).

Description	Weight [kg]	Arm [m]
LMS-Q680i and Phase One 4-band camera system installation (Includes all LRUs, supporting structure, operator desk and wirings)	66.2	0.360

Refer to the basic AFM for weight and balance procedures.

SECTION 7 AIRFRAME AND SYSTEMS DESCRIPTION

Refer to the basic AFM for the aircraft systems description.

In addition to basic equipment, the following units are installed:

RIEGL LMS-Q680i

Sensor Head Unit

The LMS-Q680i is a long-range airborne laser scanner manufactured by RIEGL. The instrument makes use of the time-of-flight distance measurement principle of infrared nanosecond pulses

RIEGL DR560-RD

Storage Device

This data storage device is capable of handling the data stream provided by the RIEGL LMS-Q680i. It supports RAID 1 to achieve high data integrity and RAID 0 for increased data throughput.

Phase One iXU-RS1900 4-Band

4-Band camera system

The PhaseOne 4-Band camera features two CMOS sensors and two 90mm lenses for capturing RGB information. An additional 50 mm lens is equipped, for capturing NIR information, providing 4-Band (RGB, NIR) imagery.

PhaseOne iX Controller

System controller

Acting as a central hub to Phase One Aerial Systems, it controls the cameras, the gyro-stabilizing mount, the GNSS/IMU system, and runs iX Capture and iX Flight software. The iX Controller MK 4 includes an I/O port to enable accurate activation of multiple cameras by iX Flight, pre-installed on the iX Controller.accurate activation of multiple cameras by iX Flight, pre-installed on the iX Controller.

IMU-FSAS

IMU- inertial measuring unit

SPAN-SE

GPS receiver

Beetronics 13” 16:9 display

Operator’s mission monitor

A monitor with a metallic case in installed on an operator desk near the airborne scanning system to display the acquired data. It features a metallic and robust case, and an opaque finish to improve visibility under direct sunlight.

Beetronics 7” 4:3 display

Pilot’s mission monitor

For pilot support in maintaining precise trajectory for mission purposes.

Novatel GNSS Antenna

Mission GNSS Antenna

Cfr.. MOD2006/319

Canon EOS 5DSR

*2*Digital camera*

With a 50.6 megapixel sensor, it allows for additional mission purposes high-resolution imagery acquisition.

Quint Power

AC/DC Voltage Regulator

Canon TC-80N3

Canon Remote Control

Operator's desk

This structure includes an adjustable support for the operator's mission display and a support surface for additional operator's equipment, e.g. a laptop.

Support frame (cfr. MOD2006/297)

Element located in aircraft baggage compartment, on which the controller unit and the storage unit are firmly installed.

In following figure, the interconnections between the different systems are presented:

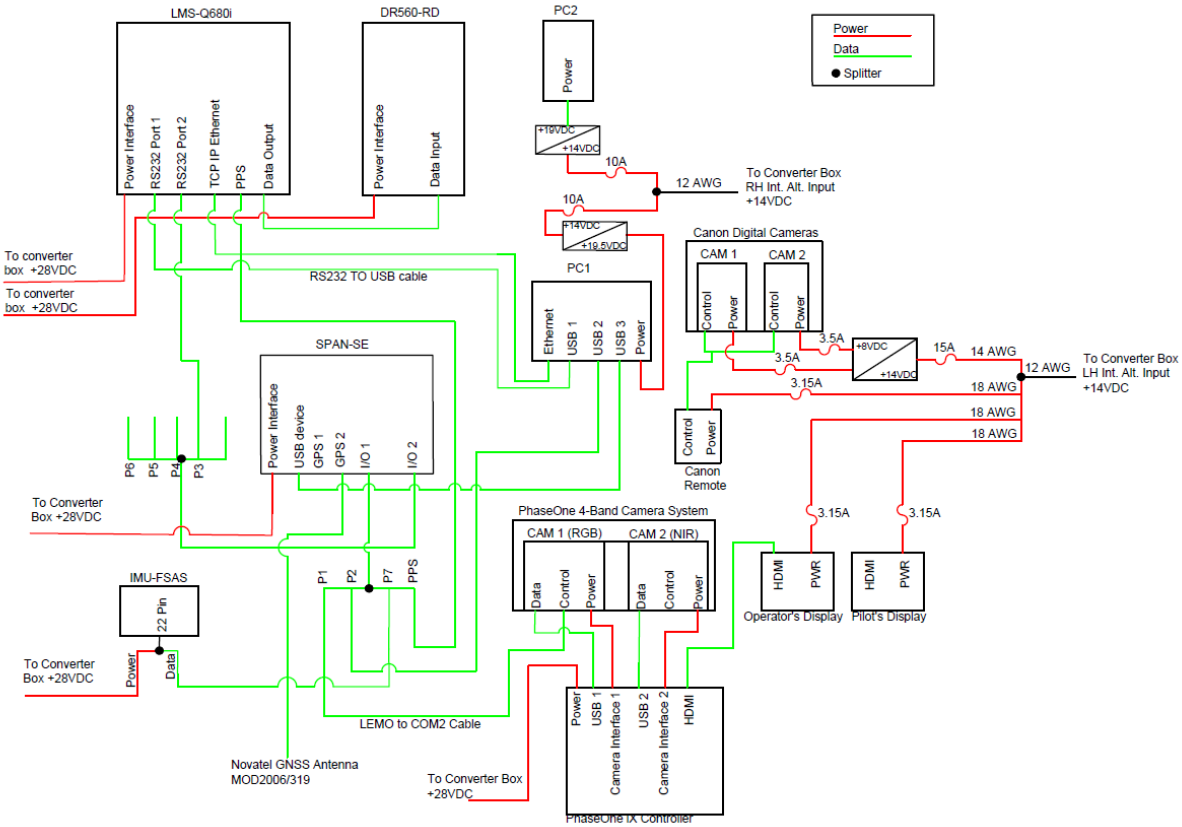

SECTION 8 GROUND HANDLING & SERVICE

Refer to the basic AFM.

SUPPLEMENT NO. G27

INSTALLATION OF PHASEONE CAMERA IN TAIL CONE HATCH

RECORD OF REVISIONS

Rev	Revised page	Description of Revision	Tecnam Approval			EASA Approval Or Under DOA Privileges
			DO	OoA	HDO	
0	-	First issue	L. De Martino	D. Ronca	M. Oliva	Approved under the authority of DOA ref. EASA.21J.335 MOD2006/386.200220
-	-	-	-	-	-	-

LOEP

Pages	Revision
G27 – 1 through 13	*Rev. 0*

INTRODUCTION

This section contains supplemental information to operate, in a safe and efficient manner, the aircraft when a Phase One Camera is installed in tail cone hatch.

The information contained herein supplements or supersedes the basic Aircraft Flight Manual.

SECTION 1 GENERAL

This modification allows to connect the mission system (Phase One camera and related LRUs) to the dedicated mission power system, when MOD2006/204 modification is implemented. This design change MOD2006/204 must be implemented in the aircraft prior to carry out the installation of the Phase One camera in tail cone hatch.

The standard P2006T (without MOD2006/204) and all its systems operate with 14V tension, which is made available via 2 x 40A alternators. The internal Rotax 912S (engines equipping the aircraft) are normally not activated or they only feed the engine starting battery re-charge.
P2006T, when incorporating MOD2006/204, includes the following main differences:

a) External alternators are 2 x 70A instead of 2 x 40A, still operating with 14 VDC tension output.
b) Internal generators, 2 x 20A at 14V DC are enabled.
c) Given that the aircraft systems and avionics still needs 2 x 40 A, there is an overall power surplus of 2 x 30A + 2 x 20A at 14V or 100A at 14V DC in total.
d) The surplus power is directed to a converter box, shown in figure 1 and installed inside the baggage compartment, whose role is to convert the 4 separate inputs from 14V DC to 28V DC, regulate it and make it available for mission purposes.
e) The converter box also converts power coming from 14V DC Ground power unit for mission system ground check.
f) The converter box features 4x KGS RH28 converters having up to 90% conversion efficiency.
g) Even considering 80% of conversion efficiency, the total power available for mission equipment is: **40Amp @ 28VDC**

h) Peak power can be sustained by converters as well as by all protection CB, and the entire system is capable to work with mission equipment.
i) Converter box also features 4 lamps, each one dedicated to a converter and indicating its failure.

   NOTE: one or more lamp illuminating could also indicate that the corresponding converter is delivering a power of less than 4Amp, thus in case of very low power consumption, one or more lamp could remain illuminated

j) Internal relays are excited by the mission system switches, which is the only control for the pilot to start the mission power. If one or both MAIN FIELD (alternators) does not work, or it is in OFF position, the mission power is automatically cut off as safety provision (i.e. in case of OEI conditions).

Each output of converters is connected to four coils (one for each converter) internally provided by reed (magnetic normally closed switch). The reed are therefore normally open when the converter works properly, while in case of failure of converter, the reed change its state and the lamp connected to it turns on.

The lamps (one for each converter), give information about the state of the converters. Failure indicating lamps could be on for one the following causes:

- malfunction of one or more converters;
- low power consumption:
  in case of a very low power consumption from the mission system (i.e. 10Amp), every converter manages only 2,5Amp and this low current could not be able to generate a magnetic field sufficient to turn the failure lamp OFF.

The malfunction of one or more converters does not involve the mission abort, if the remaining converters can sustain the request of the load. Each of the 4 converters can autonomously sustain 10A/28VDC maximum load. As an example, if the mission system demand is for 20 A, only 2 converters can feed it properly. In case of engine or alternator failure, the converter box power is automatically cut off, overvoltage protections are provided.

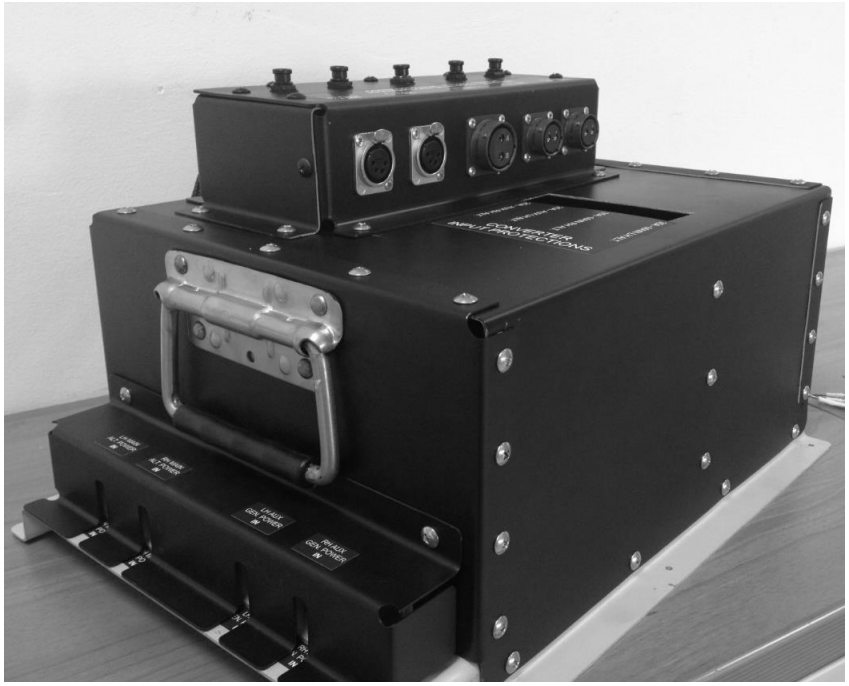

Figure 1 – Converter Box

SECTION 2 LIMITATIONS

Refer to the basic AFM.

SECTION 3 EMERGENCY PROCEDURES

No additional emergency procedure is imposed by this installation since mission system power is automatically cut off as safety provision in case of at least one alternator (both main or aux) failure.

SECTION 4 NORMAL PROCEDURES

If main alternators are properly generating, and AUX FIELD (mission power) switches are BOTH ON, the power flows inside the converters and then, on a common bus, a 28V power is made available via multiple connectors.

ON GROUND OPERATIONS WITH 12-14 VDC GPU CONNECTED

In order to check mission system works properly follow the next steps:

1) Verify Master is OFF
2) Verify BOTH FIELD (LH and RH) are OFF
3) Verify BOTH CROSS BUS (LH and RH) are OFF
4) Verify BOTH AVIONIC (LH and RH) are OFF
5) Verify BOTH AUX FIELD (LH and RH) are OFF
6) Verify that GPU is, at least, able to provide 100A at 14 VDC or an adequate power once it is converted to the sensor needs

CAUTION

Never use a 28 VDC GPU on P2006T airplane

7) Switch AUX FIELD RH ON
8) Switch AUX FIELD LH ON
9) Plug in the 14V GPU to the external power socket
10) The converter box is now ready to feed mission system for ground checks (NOTE: In this condition, the converter failure indicating lamps are not powered)
11) Perform additional verification according to the following table:

WITH GPU CONNECTED TO EXTERNAL POWER SOCKET...						
...if you want to...				...you need to operate the following switches		
Test Aircraft Avionics	Test Mission equip. only	Charge a/c Battery	Test converter Failure lamps	MASTER	CROSS BUS (LH, RH or BOTH)	AUX LH and RH
✓	X	X	X	OFF	OFF	OFF
✓	X	✓	X	ON	OFF	OFF
X	✓	X	X	OFF	OFF	ON
✓	✓	✓	✓	ON (note1)	ON	ON

NOTE1: To avoid converter box relays tripping, the following sequence is needed to test the converter failure indicating lamps:

1) AUX RH switch ON
2) AUX LH switch ON
3) Plug in the 14V GPU to the external power socket
4) BOTH CROSS BUS ON
5) MASTER ON

The reverse procedure can be used to stop the ground check.

OPERATIONS DURING FLIGHT (WITH ENGINES RUNNING)

With engines running (in flight or ground) the mission power system works only if the MASTER is ON, BOTH FIELD LH and RH are ON and both main alternators are correctly generating power. If these conditions are satisfied, the mission power is activated through the "AUX LH and AUX RH" switches.

Start mission power in flight

1) Verify that MASTER is ON
2) Verify that FIELD LH is ON and left alternator is generating power (no LH ALT FAIL on MFD)
3) Verify that FIELD RH is ON and left alternator is generating power (no RH ALT FAIL on MFD)
4) Recommended minimum RPM before mission power switches ON = 1500 (or idle if mission equipment power expected is less than 20A)
5) AUX FIELD LH – switch ON
6) AUX FIELD RH – switch ON
7) Power start to flow into converter box.
8) Switch on mission equipment. If the overall mission needed power is more than 25 A, all converter box lamps should de-illuminate.
9) Switch on pilot mission monitor – adjust display brightness (no glare)
10) Verify that pilot mission monitor and relative cables do not interfere with flight control commands.

NOTE

When operating mission equipment with a low power demand, it is likely that only one failure indicating lamp will de-illuminate or flashes. This happens because the current flow in the remaining failure lamps circuits is not sufficient to power the coils around the reed switches that open the line to the lamps.

To switch off mission power in flight (or with engines running)

1) Make sure the mission suite is switched OFF by the mission operator
2) AUX FIELD RH – switch OFF
3) AUX FIELD LH – switch OFF

The figure in the next page shows the mission power control panel layout.

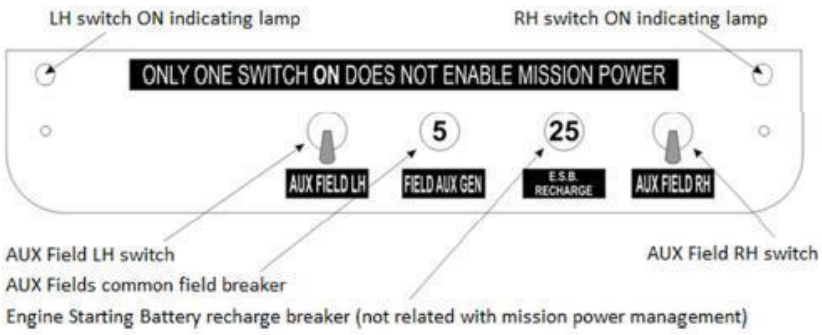

+

POST FLIGHT OPERATIONS

No change to procedures set forth in aircraft flight manual.

NOTE

It is suggested to power OFF mission power system (AUX LH and AUX RH BOTH OFF) when engines are still above 1500 RPM. Mission equipment should be switched OFF before the engine shut down. Keeping mission suite ON with engines at low rpm or in idle could cause drop of tension, mid-term damages to the converters and mission system shutdown. This does not apply if mission equipment power required is less than 20A.

SECTION 5 PERFORMANCE

Refer to the basic AFM.

SECTION 6 WEIGHT AND BALANCE

The following table contains the details about the mass position of the system in respect to the aircraft datum as in AFM (leading edge vertical).

Description	Weight [kg]	Arm [m]
PhaseOne camera in tail cone hatch	2.76	1.70
iX Controller and Frame	9.2	1.10
SPAN-SE	3.5	0.95

Refer to the basic AFM for weight and balance procedures.

SECTION 7 AIRFRAME AND SYSTEMS DESCRIPTION

Refer to the basic AFM for the aircraft systems description.

In addition to basic equipment, the following units are installed:

PhaseOne iXM-RS150f

Digital Camera

Ultra high resolution camera ideal as 3D city modelling aerial camera or aerial mapping camera.

PhaseOne iX Controller

System controller

Acting as a central hub to Phase One Aerial Systems, it controls the cameras, the gyro-stabilizing mount, the GNSS/IMU system, and runs iX Capture and iX Flight software. The iX Controller MK 4 includes an I/O port to enable accurate activation of multiple cameras by iX Flight, pre-installed on the iX Controller.accurate activation of multiple cameras by iX Flight, pre-installed on the iX Controller.

SPAN-SE

GPS receiver

Novatel GNSS Antenna

Mission GNSS Antenna

Cfr. MOD2006/319

Beetronics 7” 4:3 display

Pilot’s mission monitor

For pilot support in maintaining precise trajectory for mission purposes.

Support frame

Cfr. MOD2006/297

SECTION 8 GROUND HANDLING & SERVICE

Refer to the basic AFM.